Bonfiglioli

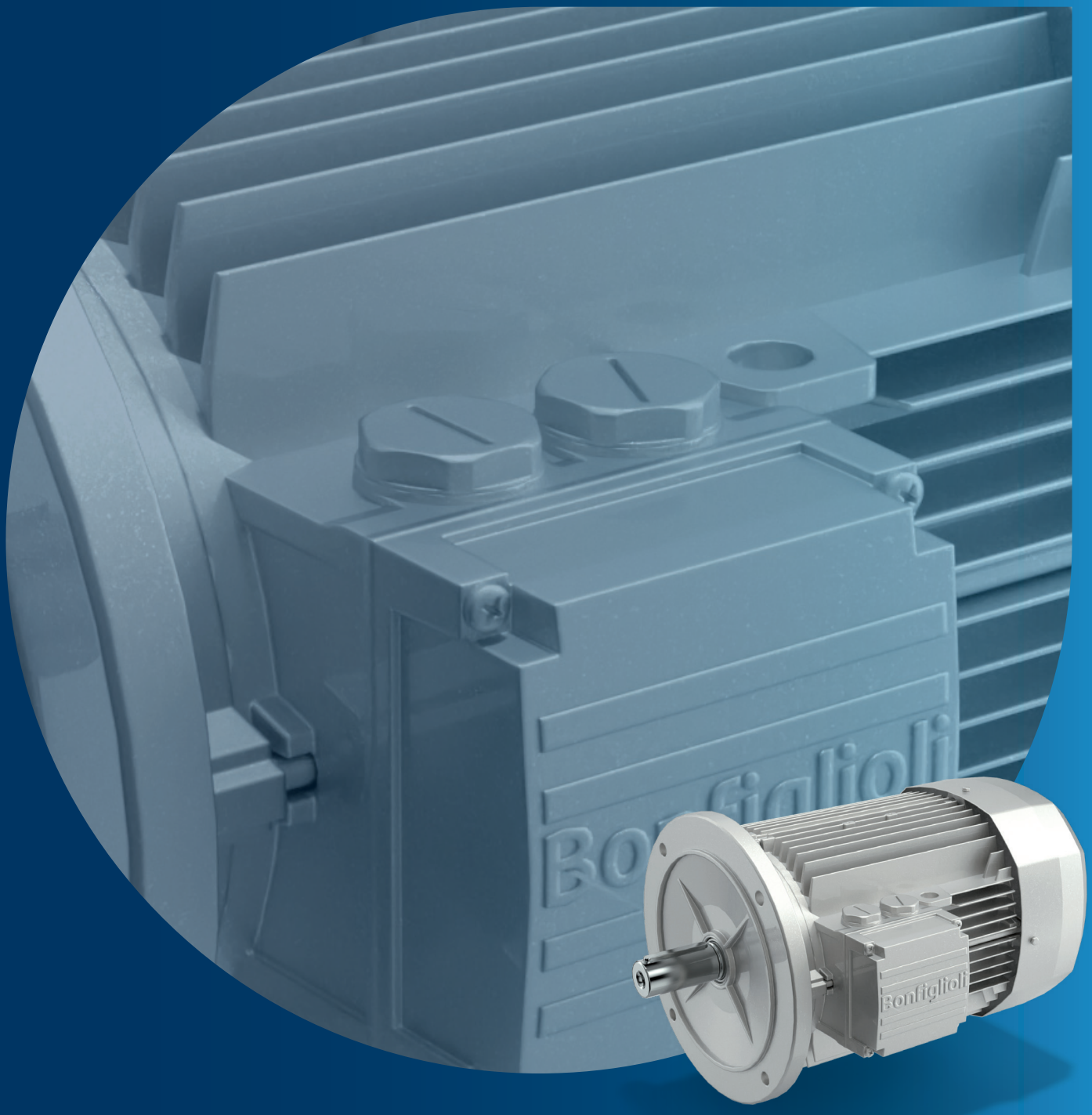

BN-BE-BX-BY Series

IE1-IE2-IE3-IE4 3~

THREE-PHASE ASYNCHRONOUS MOTORS

Have feedback on this document? Scan here.

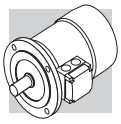

Chapter	Description		Page
M1	Symbols and units of measurement		2
M2	Introduction		3
M3	General characteristics		5
	M3.1	Production range	5
	M3.2	Standards	5
	M3.3	Directives 2006/95/EC (LVD) and 2004/108/EC (EMC)	6
	M3.4	EU Directive 2012/19/EU Information on disposal	6
	M3.5	Tolerances	6
M4	Motor designation		7
M5	Variants and options		11
	M5.1	Variants	11
	M5.2	Options	11
	M5.3	Brake-related options	12
	M5.4	Example of identifi cation nameplate for legacy motors (BX - BE - BN)	12
M6	Mechanical features		13
	M6.1	Versions	13
	M6.2	Degree of protection	14
	M6.3	Cooling	15
	M6.4	Direction of rotation	15
	M6.5	Noise	15
	M6.6	Vibrations and balancing	15
	M6.7	Terminal box	16
	M6.8	Cable entry	16
	M6.9	Bearings	17
M7	Electrical characteristics		18
	M7.1	Voltage	18
	M7.2	Frequency	20
	M7.3	Ambient temperature	21
	M7.4	50 HZ normalized power	21
	M7.5	Motors for USA and Canada	22
	M7.6	Motors certifi ed for India	23
	M7.7	China Compulsory Certification	23
	M7.8	Motor certifi ed for China (China Energy Label)	24
	M7.9	Motors certifi ed for Brazil	25
	M7.10	Motors certifi ed for Australia	25
	M7.11	Insulation class	25
	M7.12	Type of duty	26
	M7.13	Inverter-controlled motors	28
	M7.14	Permissible starts per hour, Z	29
M8	Brake motors - direct current brake for BX-BE-BX | MX-ME-M		30
	M8.1	Operation	30
	M8.2	Most signifi cant features	30
	M8.3	Degree of protection	32
	M8.4	FD brake power supply	32
	M8.5	FD brake technical specifi cations	35
	M8.6	FD brake connections	35
M9	Brake release systems		37
	M9.1	Release lever orientation	38
	M9.2	Separate brake supply	38
M10	Options		38
	M10.1	Soft-start / stop	38
	M10.2	Capacitive filter	38
	M10.3	Thermal protective devices	38
	M10.4	Thermistors	38
	M10.5	Bimetallic thermostates	39
	M10.6	Temperature sensors	39
	M10.7	Plug connector	39
	M10.8	Control of brake operation	42
	M10.9	Additional cable entry for brakemotors	42
	M10.10	Anti-condensation heaters	43
	M10.11	Tropicalization	43
	M10.12	Second shaft extension	43
	M10.13	Backstop device	44
	M11.14	Rotor balancing	44
	M10.15	Ventilation	45
	M10.16	Rain canopy	47
	M10.17	Textile canopy	47
	M10.18	Feedback units	48
	M10.19	Insulated Bearings	49
	M10.20	Vertical Mounting	50
	M10.21	Surface protection	50
	M10.22	Painting	51
	M10.23	Certificates	51
M11	Tables of motors correlation		52
	M11.1	50 Hz Motors	52
	M11.2	60 Hz Motors	53
M12	Motor rating charts BY		55
M13	Motors dimensions BY		56
M14	Motor rating charts BX-MX		58
M15	Motors dimensions BX-MX		64
M16	Motor rating charts BE-ME		80
M17	Motors dimensions BE-ME		88
M18	Motor rating charts BN-M		96
M19	Motors dimensions BN-M		106

Revisions

Refer to page 114 for the catalogue revision index. Visit www.bonfiglioli.com to search for catalogues with up-to-date revisions.

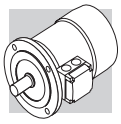

ELECTRIC MOTORS

M1 SYMBOLS AND UNITS OF MEASUREMENT

Symbols	Units of Measure	Description
$\cos\varphi$	–	Power factor
η	–	Efficiency
f_m	–	Power adjusting factor
I	–	Cyclic duration factor
I_N	[A]	Rated current
I_S	[A]	Locked rotor current
J_C	[Kgm^2]	Load moment of inertia
J_M	[Kgm^2]	Moment of inertia
K_c	–	Torque factor
K_d	–	Load factor
K_J	–	Inertia factor
M_A	[Nm]	Mean breakaway torque
M_B	[Nm]	Brake torque
M_N	[Nm]	Rated torque
M_L	[Nm]	Counter-torque during acceleration
M_S	[Nm]	Starting torque

Symbols	Units of Measure	Description
n	[min^{-1}]	Rated speed
P_B	[W]	Power drawn by the brake at 20°C
P_n	[kW]	Motor rated power
P_r	[kW]	Required power
t_1	[ms]	Brake response time with one-way rectifier
t_{1s}	[ms]	Brake response time with electronic-controlled rectifier
t_2	[ms]	Brake reaction time with a.c. disconnect
t_{2c}	[ms]	Brake reaction time with a.c. and d.c. disconnect
t_a	[°C]	Ambient temperature
t_f	[min]	Work time at constant load
t_r	[min]	Rest time
W	[J]	Braking work between service interval
W_{max}	[J]	Maximum brake work for each braking
Z	[1/h]	Permissible starting frequency, loaded
Z_0	[1/h]	Max. permissible unloaded starting frequency (I = 50%)

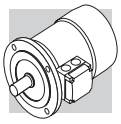

M2 INTRODUCTION

To harmonize efficiency classifications for motors manufactured and sold in the global market, the International Electrotechnical Commission (IEC) introduced Standard IEC 60034-30:2008, which was updated in 2014 and is now referred to as IEC 60034-30-1:2014, “Rotating electrical machines – Part 30-1: Efficiency classes of line operated AC motors.”In addition to defining efficiency classes for electric motors, the IEC has also developed a standard that specifies how to determine motor efficiencies and losses based on established testing methods. This standard, IEC 60034-2-1 : 2024, ensures an international common base for electric motor designing and classification, as well as for national legislative activities and provides the basis for defining the efficiency classes in IEC 60034-30-1.
Both standards were developed in conjunction with the National Electrical Manufacturers Association (NEMA), the Japan Electrical Manufacturers Association (JEMA), and the European Committee of Manufacturers of Electrical Machines and Power Electronics (CEMEP).
In 2017, the IEC published a new standard dealing with the energy efficiency of AC drives and drive-motor systems:
IEC 61800-9 “Ecodesign for power drive systems, motor starters, power electronics and their driven applications”. The standard IEC 61800-9 is harmonized in Europe as EN 61800-9 and replaces the earlier standard EN 50598 (-1 and -2).
The European Regulation 2019/1781, fully implemented since July 2023, defines for the first time legally binding energy efficiency standards for frequency inverters.

The following table shows the correspondence among the main classes.

Global efficiency classes

IEC 60034-30-1	IE1	IE2	IE3	IE4	IE5
NEMA MG-1	STANDARD	HIGH	PREMIUM	SUPER PREMIUM	
GB 18613		GRADE 4	GRADE 3	GRADE 2	GRADE 1
NBR 17094-1		IR2	IR3		
AS/NZS 1359,5	IE1	IE2	IE3		
IS 12615	IE1	IE2	IE3	IE4	
SASO 2893	IE1	IE2	IE3	IE4	
KS C IEC 60034	IE1	IE2	IE3	IE4	
JIS C 4034-30	IE1	IE2	IE3	IE4	

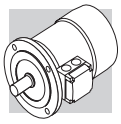

History of energy efficiency standards
IEC 60034-2-1: 2007: harmonizes the procedures for the measurement of efficiencies.
IEC 60034-30: 2008: specifies efficiency classes and forms the basis for the various national efficiency requirements.
IEC 60034-2-1: 2014: is intended to establish methods of determining efficiencies from tests, and to specify methods of obtaining specific losses.
IEC 60034-30-1: 2014: takes a step further in widening the scope of motors subject to efficiency classes and introduces the IE4 class. VSD-driven motors are out of the scope of this standard and will be dealt with in a standard of its own.
IEC TS 60034-30-2: 2016: Rotating electrical machines - Part 30-2: Efficiency classes of variable speed AC motors (IE-code)
IEC 60034-2-3 : 2020: Rotating electrical machines - Part 2-3: Specific test methods for determining losses and efficiency of converter-fed AC motors.
IEC 60034-2-1: 2024: Updates the standard methods for determining losses and efficiency from tests, introducing refined procedures to ensure higher measurement accuracy.

The IE classes are shown in the following table:

Class type	**Class number**
Standard efficiency	IE1
High efficiency	IE2
Premium efficiency	IE3
Super premium efficiency	IE4

IEC 61800-9:2017 introduced the extended product approach, which allows us to determine the efficiency of drive + motor + driven equipment (i.e. a pump) under defined load-time profile.
The regulation defines efficiency classes for AC drives and motor-drive systems (Power Drive Systems in the standard).
For AC drives, the standard defines three classes: IE0, IE1 and IE2.
For motor-drive systems, there are again three classes: IES0, IES1 and IES2. The ‘S’ after ‘IE’ stands for ‘system’.
European Regulation 2019/1781: New regulations for the European market for induction motors and electronic motors controls such as frequency inverters.

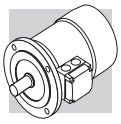

M3 GENERAL CHARACTERISTICS

M3.1 Production range

The asynchronous three-phase electric motors of BONFIGLIOLI, are available in basic design IMB5 and derived versions.
Motors are the enclosed type with outer fan and cage-tipe rotor for use in industrial environments.
Standard versions of BX-BE/MX-ME motors are 230/400V Δ/Y (400/690V Δ/Y in sizes BX-BE 160 and BX- BE 180), 50 Hz motors, with a tolerance of ±10%. Standard BN/M motors are designed to operate from a rated voltage 230/400V Δ/Y (400/690V Δ/Y for frame sizes BN 160 through BN 200) 50 Hz, with ±10% tolerance.
On the BXN/MXN motors, it is present a terminal box with 9 PIN connection + 12 wires winding that makes it easy to obtain the right voltage for most countries as standard. The Standard versions is identified as WD1 and makes it possible to obtain the following voltages/frequency (115/200/230/400V-50Hz and 132/230/265/460V-60Hz). For the BXN/MXN motors the voltage tolerance is reduced to ±5%.

M3.2 Standards

The motors described in this catalogue are manufactured to the applicable standards shown in the following table.

(F01)

Title	CEI	IEC
General requirements for rotating electrical machines	**CEI EN 60034-1**	**IEC 60034-1**
Terminal markings and direction of rotation of rotating machines	**CEI 2-8**	**IEC 60034-8**
Methods of cooling for electrical machines	**CEI EN 60034-6**	**IEC 60034-6**
Dimensions and output ratings for rotating electrical machines	**EN 50347**	**IEC 60072**
Classification of degree of protection provided by enclosures for rotating machines	**CEI EN 60034-5**	**IEC 60034-5**
Noise limits	**CEI EN 60034-9**	**IEC 60034-9**
Classification of type of construction and mounting arrangements	**CEI EN 60034-7**	**IEC 60034-7**
Rated voltage for low voltage mains power	**CEI 8-6**	**IEC 60038**
Vibration level of electric machines	**CEI EN 60034-14**	**IEC 60034-14**
Efficiency classes of single-speed, three-phase, cage-induction motors (IE code)	**CEI EN 60034-30-1**	**IEC 60034-30-1**
Standard method for determining losses and efficiency from tests	**CEI EN 60034-2-1**	**IEC 60034-2-1**

The motors also comply with foreign standards adapted to IEC 60034-1 as shown here below.

(F02)

DIN VDE 0530	Germany
BS5000 / BS4999	Great Britain
AS 1359	Australia
NBNC 51 - 101	Belgium
NEK - IEC 34	Norway
NF C 51	France
OEVE M 10	Austria
SEV 3009	Switzerland
NEN 3173	Netherlands
SS 426 01 01	Sweden

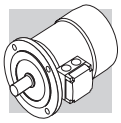

M3.3 Directives 2006/95/EC (LVD) and 2004/108/EC (EMC)

Bonfiglioli motors meet the requirements of Directives 2014/35/UE (LVD - Low Voltage Directive), the 2014/30/UE (EMC - Electromagnetic Compatibility Directive), the 2009/125/CE (ERP - Energy Related Products Directive) and 2011/65/UE (RoHS – Restriction of Hazardous Substances) and their nameplates bear the CE mark.
As for the EMC Directive, construction is in accordance with standards CEI EN 60034-1 (Rotating electrical machines Part 1: Rating and performance), CEI EN 61000-6-2 (Generic standards - Immunity for industrial environments), CEI EN 61000-6-4 (Generic standards - Emission standard for industrial environments).
Motors with FD brakes, when fitted with the suitable capacitive filter at rectifier input (option CF), meet the emission limits required by Standards CEI EN 61000-6-3 and CEI EN 60204-1.
The responsibility for final product safety and compliance with applicable directives rests with the manufacturer or the assembler who incorporate the motors as component parts.

UKCA mark as standard

In UK, the CE mark will be replaced by the UKCA (United Kingdom Conformity Assessed mark) mark, due to Brexit, starting from 1st January 2022. All Bonfiglioli motors are already compliant with UKCA requirements.

M3.4 EU Directive 2012/19/EU - Information on disposal

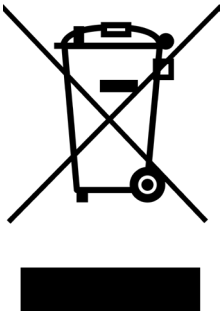

This product should not be mixed with general household waste. Disposal has to be carried out in conformity with EU Directive 2012/19/EU where established, and in accordance to national regulations.
Fulfill disposal in accordance with any other legislation in force throughout the country.

M3.5 Tolerances

As per the Norms CEI EN 60034-1, applicable the tolerances here below apply to the following quantities.

(F03)

-0.15 (1 - η) P ≤ 150kW -0.10 (1 - η) P > 150kW	Efficiency
-(1 - cosφ)/6 min 0.02 max 0.07	Power factor
±20% *	Slip
+20%	Locked rotor current
-15% +25%	Locked rotor torque
-10%	Max. torque

(*) ± 30% for motors with Pn < 1 kW

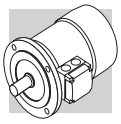

M4 MOTOR DESIGNATION

MOTOR

BY 280MAK 4 400/690-50 IP55 CLF B5 .....

OPTIONS

MOTOR MOUNTING
IM B5 - IEC motor

INSULATION CLASS
CL F standard
CL H option

DEGREE OF PROTECTION
IP55, IP56 standard

VOLTAGE - FREQUENCY
400/690-50

POLE NUMBER
4

MOTOR SIZE
280SCK ... 355SAK (IEC motor)

MOTOR TYPE
BY = IEC 3-phase, class IE4

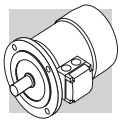

MOTOR | BRAKE

BX 132SB 4 230/400-50 IP55 CLF B5 **W** **FD** 7.5 R AA SB 220 SA .....

OPTIONS

BRAKE SUPPLY

RECTIFIER TYPE
AC/DC
NB, **SB, NBR, SBR**

RELEASE LEVER ORIENTATION
AA, AB (standard)**, AC, AD**

BRAKE HAND RELEASE
R, RM

BRAKE TORQUE

BRAKE TYPE
FD (d.c. brake)

TERMINAL BOX POSITION
(compact motor only)
W (default), **N**, **E**, **S**

MOTOR MOUNTING
− compact motor
B3, B5, B14, B5R, B14R, B34, B35 - IEC motor

INSULATION CLASS
CL F standard
CL H option

DEGREE OF PROTECTION
IP55 standard (IP56 - option)
IP54, **IP55** brake motor

VOLTAGE - FREQUENCY
(See Paragraph M7.1)

POLE NUMBER
4

MOTOR SIZE
63A ... 355 (IEC motor)
05A ... 5LA (compact motor)

MOTOR TYPE
BX = IEC 3-phase, class IE3 **MX** = compact 3-phase, class IE3

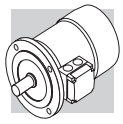

MOTOR BRAKE

BE 90LA 4 230/400-50 IP55 CLF B5 **W** **FD** 7.5 R AA SB 220 SA .....

OPTIONS

BRAKE SUPPLY

RECTIFIER TYPE
AC/DC
NB, **SB, NBR, SBR**

RELEASE LEVER ORIENTATION
AA, AB (standard)**, AC, AD**

BRAKE HAND RELEASE
R, RM

BRAKE TORQUE

BRAKE TYPE
FD (d.c. brake)

TERMINAL BOX POSITION
(compact motor only)
W (default), **N**, **E**, **S**

MOTOR MOUNTING
− compact motor
B3, B5, B14, B5R, B14R, B34, B35 - IEC motor

INSULATION CLASS
CL F standard
CL H option

DEGREE OF PROTECTION
IP55 standard (IP56 - option)
IP54, **IP55** brake motor

VOLTAGE - FREQUENCY
(See Paragraph M7.1)

POLE NUMBER
2, **4**, **6**

MOTOR SIZE
63A ... 180L (IEC motor)
05A ... 5L (compact motor)

MOTOR TYPE
BE = IEC 3-phase, class IE2 **ME** = compact 3-phase, class IE2

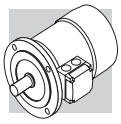

MOTOR | BRAKE

BN 90LA 4 230/400-50 IP55 CLF B5 **W** **FD** 7.5 R AA SB 220 SA .....

OPTIONS

BRAKE SUPPLY

RECTIFIER TYPE
AC/DC
NB, **SB, NBR, SBR**

RELEASE LEVER ORIENTATION
AA, AB (standard)**, AC, AD**

BRAKE HAND RELEASE
R, RM

BRAKE TORQUE

BRAKE TYPE
FD (d.c. brake)

TERMINAL BOX POSITION
(compact motor only)
W (default), **N**, **E**, **S**

MOTOR MOUNTING
− compact motor
B3, B5, B14, B5R, B14R, B34, B35 - IEC motor

INSULATION CLASS
CL F standard
CL H option

DEGREE OF PROTECTION
IP55 standard (IP56 - option)
IP54, **IP55** brake motor

VOLTAGE - FREQUENCY
(See Paragraph M7.1)

POLE NUMBER
2, **4**, **6**

MOTOR SIZE
56A ... 200LA (IEC motor)
0B ... 5SB (compact motor)

MOTOR TYPE
BN = IEC 3-phase **M** = IEC compact 3-phase

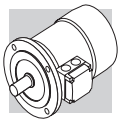

M5 VARIANTS AND OPTIONS

M5.1 Variants

(F04)

Category	Description	Default	Option
Voltage	(BN - BE - BX) ≤ 132	230/400/50	…
	(BN - BE - BX) ≥ 160 / (BY) ≥ 280	400/690/50	
Insulation class	All motor series	CLF	CLH
Design version	BX - BE - BN	B14, B5R, B14R, B3, B34, B35	B5R

Default values. * See EVOX specific catalogue

M5.2 Options

(F05)

Description	Catalogue numbers								Availability
Thermal protective devices	D3	K1	E3		PT100*				BY-BX-BE-BN-MX-ME-M
50 Hz normalized power	PN								BN - M
Feedback devices	EN1	EN2	EN3	EN4	EN5	EN6	EN7*	EN8*	BY-BX-BE-BN-MX-ME - M
Anti-condensate heaters	H1	NH1							BY-BX-BE-BN-MX-ME - M
Tropicalized windings	TP								BY-BX-BE-BN-MX-ME - M
Double-extended shaft	PS								BY-BX-BE-BN-MX-ME - M
Rotor balancing grade B	RV								BY - BX - BE - BN - MX - ME - M
External mechanical protections	RC	TC****							BY-BX-BE-BN-MX-ME - M
Forced ventilation	U1	U2**							BY - BX - BE - BN - MX - ME - M
Insulated Bearings	IB*								BY - BX
Certification UL	CUS°								BX - BE - BN - MX - ME - M
Bureau of Indian Standard Certification	BIS								BX - BE - MX - ME
China Compulsory Certification	CCC								BN - M
China Energy Label	CEL								BX - MX
Global motor	CN								BXN - MXN
NBR Certification	NBR								BX - MX
EECA Ceertification	EECA								BX
Plug connector	CON****								BX - BE - BN MX - ME - M
Surface protection	C_								BY-BX-BE-BN-MX-ME - M
Painting	RAL								BY-BX-BE-BN-MX-ME - M
Certificates	ACM****								BX - BE - BN - MX - ME - M
Inspection certificate	CC								BY-BX-BE-BN-MX-ME - M
Vertical Mounting	VM*								BY - BX
Backstop device	AL	AR							MX - ME - M
Type of duty	S2	S3							BN - M

* BX >=200 and BY >= 280

** Only for motors BN

*** Not for motors BX - MX

**** Only for BN-BE and BX<=180

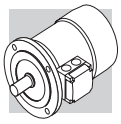

M5.3 Brake-related options

(F06)

Description	Catalogue numbers				Availability
Brake torque	Refer to the specific brake type				
Manual release lever	R	RM			BX - BE - BN MX - ME - M
Release lever orientation	AB	AA	AC	AD	BX - BE - BN MX - ME - M
DC brake rectifier	NB	NBR	SB	SBR	BX - BE - BN MX - ME - M
Soft-start flywheel	F1				BE - BN ME - M
Capacitive filter	CF				BX - BE - BN MX - ME - M
Brake separate power supply (*)	...SA	...SD			BX - BE - BN MX - ME - M
Brake functionality check	MSW				BX - BE - BN MX - ME - M
Additional cable entry for brake motors	IC				BN M

(*) Specify voltage. (°) Not for BXN/MXN

Default values.

M5.4 Example of identification nameplate for legacy motors (BX - BE - BN)

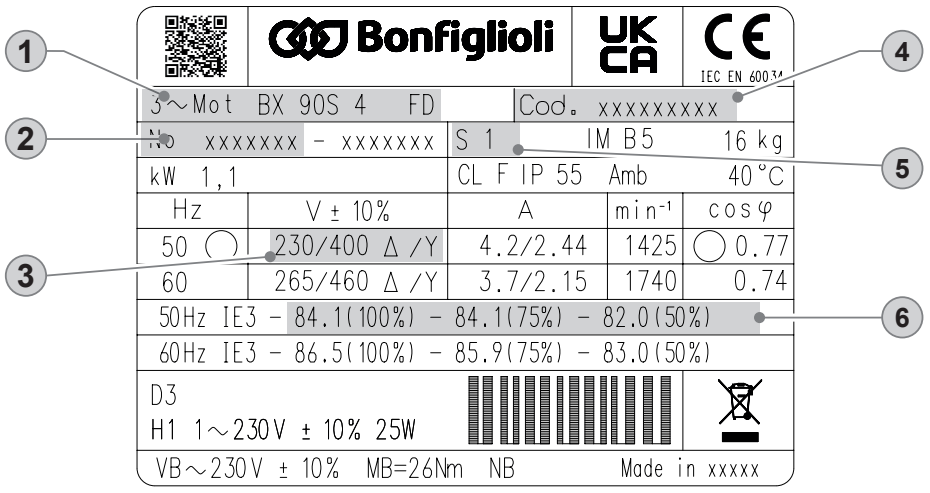

① BONFIGLIOLI Motor type
② Serial number
③ Rated voltage
④ Motor code
⑤ Type of duty: S1 Continuous duty
⑥ IE Class, Efficiency at: 4/4 - 3/4 - 2/4 load

M6 MECHANICAL FEATURES

M6.1 Versions

BX, BE and BN motors are available in the design versions as indicated in the table below as per Standards EN 60034-7 (BX/BE), CEI EN 60034-14 (BN).
Motor reporting on nameplate the standard mounting position can be mounted in the position illustrated in the following table:

(F07)

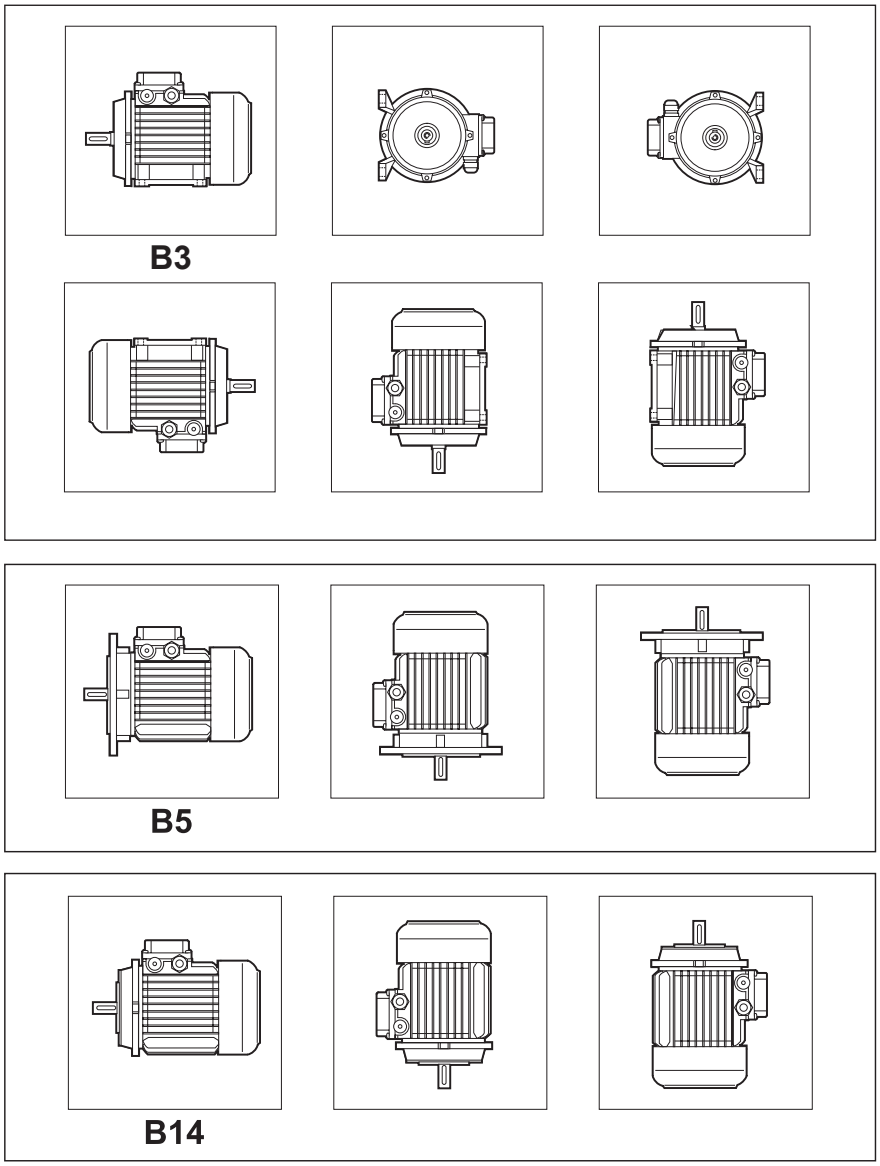

B3 mounting can be combined with B5 or B14 thus becoming B35 in the first case and B34 in the second one.

For **Motor BX≥200K and BY≥280K** it is necessary to select VM options when vertically mounted.

If the motor will be mounted with DE facing downwards, selection of RC option is recommended. This has to be specified during the ordering phase because not present in standard motor version.

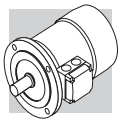

Flange output motors are also available with reduced coupling dimensions, as indicated in the table below - executions **B5R**. Their use in combination with gearboxes must be however coherent with the maximum installable power on gearboxes themselves (see chapters “Motors availability”). In case this condition is not met need to contact the Technical Service for the checking of the combination.

(F08)

	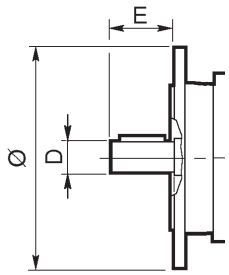					
	BX/BE/BN 71	**BX/BE/BN 80**	**BX/BE/BN 90**	**BX/BE/BN 100**	**BX/BE/BN 112**	**BX/BE/BN 132**
	DxE - Ø					
B5R(1)	11x23 - 140	14x30 - 160	19x40 - 200	24x50 - 200	24x50 - 200	28x60 - 250

(1) flange with through holes

On BX sizes 71 and 80A, the B5R design is not available in combination with the following options: ENx, PS, and U1.

M6.2 Degree of protection

IP..

The following chart provides an overview of the degrees of protection available.
In addition to the degree of protection specified when ordering, motors to be installed outdoors require protection against direct sunlight and also – when they are to be installed vertically down – a drip cover to prevent the ingress of water and solid particles (option RC).

(F09)

		IP 54	IP 55	IP 56
BY…K - BX…K - BX - BE - BN	**MX - ME - M**	⛔	standard	option
BX_FD - BE_FD - BN_FD	**MX_FD - ME_FD - M_FD**	standard	option	⛔
200 ≤ **BX… K_FD** < 280	**-**	⛔	standard	⛔
BX…K_FD ≥ 280	**-**	⛔	standard	option

(*) BX ≤ 180_FD

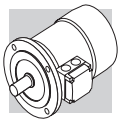

IP	5	5

0		Not protected
1		Protected against extraneous solid bodies having Ø ≥ 50 mm
2		Protected against extraneous solid bodies having Ø ≥ 12.5 mm
3		Protected against extraneous solid bodies having Ø ≥ 2.5 mm
4		Protected against extraneous solid bodies having Ø ≥ 1.0 mm
5		Protected against dust
6		No dust ingress

0		Not protected
1		Protected against vertical water drips
2		Protected against vertical water drips inclined up to 15°
3	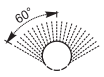	Protected against rain
4		Protected against water splashes
5	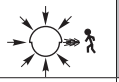	Protected against jets of water
6	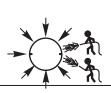	Protected against powerful jets of water
7	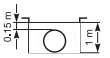	Protected against the effects of temporary immersion
8	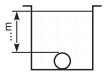	Protected against the effects of continuous immersion

M6.3 Cooling

The motors are externally ventilated (IC 411 to CEI EN 60034-6) and are equipped with a plastic fan working in both directions.
The motors must be installed allowing sufficient space between fan cowl and the nearest wall to ensure free air intake and allow access for maintenance purposes on motor and brake, if supplied.
Independent, forced air ventilation (IC 416) can be supplied on request (option U1).
This solution enables to increase the motor duty factor when driven by an inverter and operating at reduced speed.

M6.4 Direction of rotation

Rotation is possible in both directions. If terminals U1, V1 and W1 are connected to line phases L1,L2 and L3, clockwise rotation (looking from drive end) is obtained. For counterclockwise rotation, switch two phases.

M6.5 Noise

Noise levels, measured using the method prescribed by ISO 1680 Standards, are within the maximum levels specified by Standards CEI EN 60034-9.

M6.6 Vibrations and balancing

Rotor shafts are balanced with half key fitted and fall within the vibration class N, as per Standard CEI EN 60034-14.

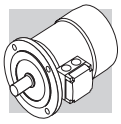

M6.7 Terminal box

Legacy motors (BN/M - BE/ME - BX/MX) terminal board features 6 studs for eyelet terminal connection while EVOX BXN and MXN motors have always 9 studs as standard.
When a legacy motor have UL option active the terminal board features 9 studs execution (for US voltage “Dual Voltage”). A ground terminal is also supplied for earthing of the equipment. Terminals number and type are shown in the following table. For brake power supply, please read par. M9 (brake FD). Brakemotors house the a.c./d.c. rectifier (factory pre-wired) inside the terminal box. Wiring instructions are provided either in the box or in the user manual.

(F10)

		No. of terminals	Terminal threads
BX 63 ... BX 90 **BE 63 ... BE 90** **BN 56 ... BN 90**	**MX05 ... MX2** **ME05 ... ME2** **M05 ... M2**	6	M4
BX 100 ... BX 132 **BE 100 ... BE 132** **BN 100 ... BN 160MR**	**MX3, MX4** **ME3, ME4** **M3 ... M4**	6	M5
BX 160 - BE 160 ... BE 180M **BN 160M ... BN 180M**	**ME5** **MX5 - M5**	6	M6
BX 180 - BE 180L **BN 180L ... BN 200L**	**-** **-**	6	M8
BX 200K ... BX 250K	**-**	6	M10
BY 280K ... BY 355K **BX 280K ... BX 355K**	**-** **-**	6	M12
BX 80 ... BX 132 **BE 63 ... BE 132** **BN 63 ... BN 160MR**	**MX2 ... MX4** **ME05 ... ME4** **M05 ... M4**	9	M4
BX 160 ... BX 180 **BE 160 ... BE 180** **BN 160M ... BN 200L**	**MX5** **ME5** **M5**	9	M6

M6.8 Cable entry

The holes used to bring cables to terminal boxes use metric threads in accordance with standard EN 50262 as indicated in the table here after.

(F11)

		Cable gland and dimensions	Position	Maximum cable diameter allowed [mm]
BX 63 - BE 63 - BN 63	**MX05 - ME05 - M05**	2 x M20 x 1.5	1 Hole on each side	13
BN71 ... BN90, BE71 ... BE90, BX71 ... BX90	**M1 - M2, ME1 - ME2, MX1 - MX2**	2 x M25 x 1.5		17
BN100 - BN112, BE100 - BE112, BX100 - BX112	**MX3, MX4 - ME3 M3**	2 x M32 x 1.5	2 Holes on each side	21
		2 x M25 x 1.5		17
BN132 ... BN160MR, BE132, BX132	**M4, ME4, MX4**	4 x M32 x 1.5		21
BXN 132	**MXN 40**	2 x M32 x 1.5	1+1 Hole on each side	21
		2 x M16 x 1.5		10
		1 x M16 x 1.5	1 Hole in the back	10
BN160M ... BN200L, BE160 - BE180, BX160 - BX180	**M5, ME5, MX5**	2 x M40 x 1.5 2 x M20 x 1.5	Pivoting, 4 x 90°	28 13
BY 280K ... BY 355K **BX 200K ... BX 355K**	**-**	2 x M63 x 1.5	Pivoting, 4 x 90°	45

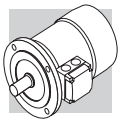

M6.9 Bearings

Life lubricated preloaded radial ball bearings are used, types are shown in the chart here under.
Calculated endurance lifetime L10h, as per ISO 281, in unloaded condition, exceeds 40000 hrs.
DE = drive end
NDE = non drive end

(F12)

IEC (IE1-IE2)	DE	NDE	
		Without Brake	With Brake
BN 56	6201 2Z C3	6201 2Z C3	–
BE 63 BN 63	6201 2Z C3	6201 2Z C3	6201 2RS C3
BE 71 BN 71	6202 2Z C3	6202 2Z C3	6202 2RS C3
BE 80 - BN 80	6204 2Z C3	6204 2Z C3	6204 2RS C3
BE 90 - BN 90	6205 2Z C3	6205 2Z C3	6305 2RS C3
BE 100 - BN 100	6206 2Z C3	6206 2Z C3	6206 2RS C3
BE 112 - BN 112	6306 2Z C3	6306 2Z C3	6306 2RS C3
BE 132 - BN 132	6308 2Z C3	6308 2Z C3	6308 2RS C3
BN 160MR	6309 2Z C3	6308 2Z C3	6308 2RS C3
BE 160M/L - BN 160M/L	6309 2Z C3	6309 2Z C3	6309 2RS C3
BN 180M	6310 2Z C3	6309 2Z C3	6309 2RS C3
BE 180M/L - BN 180L	6310 2Z C3	6310 2Z C3	6310 2RS C3
BN 200L	6312 2Z C3	6310 2Z C3	6310 2RS C3

IEC (IE3)	DE	NDE	
		Without Brake	With Brake
BX 63	6201 2Z C3	6201 2Z C3	6201 2Z C3
BX 71	6202 2Z C3	6202 2Z C3	6202 2Z C3
BX 80	6204 2Z C3	6204 2Z C3	6204 2Z C3
BX 90	6205 2Z C3	6205 2Z C3	6205 2Z C3
BX 100	6206 2Z C3	6206 2Z C3	6206 2Z C3
BX 112	6306 2Z C3	6306 2Z C3	6306 2Z C3
BX 132	6308 2Z C3	6308 2Z C3	6308 2Z C3
BX 160M/L	6309 2Z C3	6309 2Z C3	6309 2Z C3
BX 180M/L	6310 2Z C3	6310 2Z C3	6310 2Z C3
BX 200K	6312/C3	6210/C3*	6310/C3
BX 225K	6313/C3*	6212/C3*	-
BX 250K	6315/C3*	6213/C3*	-
BY 280K - BX 280K	6316/C3*	6316/C3*	-
BY 315K - BX 315K	6319/C3**	6316/C3**	-
BY 355K - BX 355K	6322/C3**	6316/C3**	-

Compact (IE1-IE2) ACSF - W	DE*	NDE	
		Without Brake	With Brake
ME 05 - M 05	6004 2Z C3	6201 2Z C3	6201 2RS C3
ME 1 - M 1	6004 2Z C3	6202 2Z C3	6202 2RS C3
ME 2 - M 2	6007 2Z C3	6204 2Z C3	6204 2RS C3
ME 3 - M 3	6207 2Z C3	6206 2Z C3	6206 2RS C3
ME 4 - M 4	6309 2Z C3	6308 2Z C3	6308 2RS C3
ME 5 - M 5	6309 2Z C3	6309 2Z C3	6309 2RS C3

Compact (IE3) ACSF - W	DE	NDE	
		Without Brake	With Brake
MX 05	6004 2Z C3	6201 2Z C3	6201 2Z C3
MX 1	6004 2Z C3	6202 2Z C3	6202 2Z C3
MX 2	6007 2Z C3	6204 2Z C3	6204 2Z C3
MX 3	6207 2Z C3	6206 2Z C3	6206 2Z C3
MX 4	6309 2Z C3	6308 2Z C3	6308 2Z C3
MX 5	6309 2Z C3	6309 2Z C3	6309 2Z C3

*Regreasable bearings with M6x1 Greasing Device
**Regreasable bearings with M10x1 Greasing Device
Note: Compact motors for W gearboxes are not equipped with a DE bearing

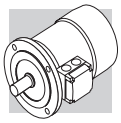

M7 ELECTRICAL CHARACTERISTICS

M7.1 Voltage

Single speed motors are provided in standard execution either for nominal voltage 230 / 400 V Δ/Y, 50 Hz, or 400 / 690 V Δ/Y, 50 Hz, with a voltage tolerance of ± 10%.
Note: Motor nominal voltage/frequency also depends on the selection of options related to energy certifications for specific markets. Table below, then, has to be intended only as a guideline, for more details on the available Voltages/Frequencies as a function of the selected certification, please refer to paragraph M7.5 - M7.10.

On all the motors, whose voltage / frequency configuration is not as indicated above, the voltage tolerance is reduced down to ± 5%.
For the operation out of the tolerance boundaries, the temperature may exceed by 10 K the limit provided by the adopted insulation class.
The motors are suitable for operation on distribution European grid with voltage complying with the pubblication IEC 60038.

(F13)

BN - M motor power supply voltages (IE1)

Single speed motors at 50Hz

Motor power supply voltage	— (CE)		CCC	CUS
	STD	FD		
220/380 - 50	✗	✓	✗	✓
230/400 - 50	✓	✓	✓	✓
240/415 - 50	✗	✓	✗	✓
290/500 - 50	✓	✓	✗	✓
380/660 - 50	✗	✓	✗	✓
400/690 - 50	✓	✓	✗	✓
415/720 - 50	✗	✓	✗	✓
500/865 - 50	✓	✓	✗	✓

Double speed motors at 50Hz

Motor power supply voltage	— (CE)	CCC	CUS
380 - 50	✓	✗	✓
400 - 50	✓	✓	✓
415 - 50	✓	✗	✓
500 - 50	✓	✗	✓

Single speed motors at 60Hz

Motor power supply voltage	— (CE)		CCC	CUS
	STD	FD		
208/360 - 60	✓	✓	✗	✓
220/380 - 60	✓	✓	✗	✓
230/400 - 60	✓	✓	✗	✓
255/440 - 60	✗	✓	✗	✓
265/460 - 60	✗	✓	✓	✓
280/480 - 60	✗	✓	✗	✓
330/575 - 60	✓	✓	✗	✓
380/660 - 60	✓	✓	✗	✓
400/690 - 60	✓	✓	✗	✓
440/760 - 60	✗	✓	✗	✓
460/800 - 60	✗	✓	✗	✓
480/830 - 60	✗	✓	✗	✓
575/995 - 60	✓	✓	✗	✓
220/440 - 60	✓	✓	✗	✓
230/460 - 60	✓	✓	✗	✓
240/480 - 60	✓	✓	✗	✓

Double speed motors at 60Hz

Motor power supply voltage	— (CE)	CUS
208 - 60	✓	✓
220 - 60	✓	✓
230 - 60	✓	✓
240 - 60	✓	✓
380 - 60	✓	✓
400 - 60	✓	✓
440 - 60	✓	✓
460 - 60	✓	✓
480 - 60	✓	✓
575 - 60	✓	✓

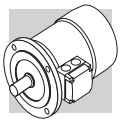

(F14)

BE - ME motor power supply voltages (IE2)			
Single speed motors at 50Hz			
Motor power supply voltage	**— (CE)**	**BIS**	**CUS**
220/380 - 50	✓	✓	✓
230/400 - 50	✓	✓	✓
240/415 - 50	✓	✓	✓
290/500 - 50	✓	✓	✓
380/660 - 50	✓	✓	✓
400/690 - 50	✓	✓	✓
415/720 - 50	✓	✓	✓
500/865 - 50	✓	✓	✓

Single speed motors at 60Hz			
Motor power supply voltage	**— (CE)**		**CUS**
	STD	**FD**	
208/360 - 60	✓	✓	✓
220/380 - 60	✓	✓	✓
230/400 - 60	✓	✓	✓
255/440 - 60	✓	✓	✓
265/460 - 60	✗	✓	✓
280/480 - 60	✓	✓	✓
330/575 - 60	✗	✓	✓
380/660 - 60	✓	✓	✓
400/690 - 60	✓	✓	✓
440/760 - 60	✓	✓	✓
460/800 - 60	✗	✓	✓
480/830 - 60	✓	✓	✓
575/995 - 60	✓	✓	✓
220/440 - 60	✓	✓	✓
230/460 - 60	✓	✓	✓
240/480 - 60	✓	✓	✓

BX - MX motor power supply voltages (IE3)						
Single speed motors at 50Hz						
Motor power supply voltage	**— (CE)**	**CCC**	**CEL**	**NBR**	**BIS**	**CUS**
230/400-50	✓ (1)	✗	✓ (6) (1)	✗	✓ (1)	✗
290/500-50	✓	✗	✗	✗	✗	✗
380/660-50	✗	✗	✓ (4)	✗	✗	✗
400/690-50	✓ (2)	✗	✓ (2) (3)	✗	✗	✗

Single speed motors at 60Hz					
Motor power supply voltage	**— (CE)**		**NBR (*)**	**CUS**	
	STD	**FD**			
220/380-60	✗	✗	✓ (3)	✗	
265/460-60	✗	✓ (1)	✗	✓ (1)	
330/575-60	✗	✓ (3)	✗	✓ (3)	
380/660-60	✗	✗	✓ (5)	✗	
440/760-60	✗	✗	✓ (4)	✗	
460/800-60	✗	✓ (2) (3)	✗	✓ (2) (3)	
220/440-60	✗	✗	✓ (3)	✗	
230/460-60	✗	✗	✗	✓ (3)	

(1) only for motor size ≤132
(2) only for motor size ≥160
(3) only for motor size ≤180
(4) only for motor size ≥200
(5) only for motor size 180
(6) only for motor size ≥100

Note: 50Hz without brake motors also have 60Hz data on the nameplate

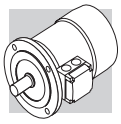

The table below shows the wiring options available.

(F15)

Number of poles			Winding connection
2	**BE 80 … BE 160, BN 63 … BN 200**	**ME2 ... ME5, M05 ... M5**	Δ / Y (²)
4	**BX 63 ... BX 180** **BX 200LAK ... BX 355MCK** **BY 280K ... BY 355K** **BE 63 … BE 180, BN 56 … BN 200**	**MX05 ... MX5** **—** **—** **ME05 ... ME5, M05 ... M5**	
6	**BE 90 … BE 160, BN 63 … BN 200**	**ME3 ... ME5, M05 ... M5**	

(²) Motors with voltage in ratio 2 (ex. 230/460 - 60) will be equipped with a 9 pin terminal box with winding connection either Δ Δ/ Δ or YY / Y (except 6 pole BN 63 Δ / Y)

NOTE: For BXN and MXN motors refer to EVOX specific catalogue

M7.2 Frequency

Rated output power BN / M for 60 Hz operation is shown in the following diagram.

(F16)

		2P		4P		6P	
		P_n [kW]	P_n [HP]	P_n [kW]	P_n [HP]	P_n [kW]	P_n [HP]
BN 27A	**-**	-	-	0.05	0.07	-	-
BN 27B	**-**	-	-	0.07	0.09	-	-
BN 27C	**-**	-	-	0.10	0.13	-	-
BN 44B	**-**	-	-	0.07	0.09	-	-
BN 44C	**-**	-	-	0.10	0.13	-	-
BN 56A	**-**	-	-	0.07	0.09	-	-
BN 56B	**M 0B**	-	-	0.10	0.13	-	-
BN 63A	**M 05A**	0.21	0.28	0.14	0.19	0.10	0.13
BN 63B	**M 05B**	0.30	0.40	0.21	0.28	0.14	0.19
BN 63C	**M 05C**	0.45	0.60	0.30	0.40	-	-
BN 71A	**-**	0.45	0.60	0.30	0.40	0.21	0.28
-	**M 1SC**	-	-	-	-	0.21	0.28
BN 71B	**M 1SD**	0.65	0.87	0.45	0.60	0.30	0.40
BN 71C	**M 1LA**	0.90	1.20	0.65	0.87	0.45	0.60
BN 80A	**-**	0.90	1.20	0.65	0.87	0.45	0.60
BN 80B	**M 2SA**	1.30	1.75	0.90	1.20	0.65	0.87
BN 80C	**M 2SB**	1.80	2.40	1.30	1.75	0.90	1.20
BN 90S	**-**	-	-	1.30	1.75	0.90	1.20
BN 90SA	**-**	1.80	2.40	-	-	-	-
BN 90SB	**-**	2.20	3.00	-	-	-	-
BN 90L	**-**	2.50	3.40	-	-	1.30	1.75
BN 90LA	**-**	-	-	1.80	2.40	-	-
BN 90LB	**-**	-	-	2.20	3.00	-	-

		2P		4P		6P	
		P_n [kW]	P_n [HP]	P_n [kW]	P_n [HP]	P_n [kW]	P_n [HP]
-	**M 3SA**	2.50	3.40	1.80	2.40	1.30	1.75
BN 100L	**M 3LA**	3.50	4.70	2.50	3.40	-	-
BN 100LA		-	-	-	-	1.80	2.40
BN 100LB	**M 3LB**	4.70	6.30	3.50	4.70	2.20	3.00
BN 100LC	**M 3LC**	-	-	4.70	6.30	-	-
-						2.50	3.40
BN 112M	**-**	4.70	6.30	4.70	6.30	2.50	3.40
BN 132S	**M 4SA**	-	-	6.50	8.70	3.50	4.70
BN 132SA		6.50	8.70	-	-	-	-
BN 132SB	**M 4SB**	8.70	11.70	-	-	-	-
BN 132M	**M 4LA**	11.00	15.00	-	-	-	-
BN 132MA		-	-	8.70	11.70	4.60	6.20
BN 132MB	**M 4LB**	-	-	11.00	15.00	6.50	8.70
BN 160MR	**M 4LC**	12.50	16.80	12.50	16.80	-	-
BN 160M	**-**	-	-	12.50	16.80	-	-
	M 5SA					8.60	11.50
BN 160MB	**M 5SB**	17.50	23.40	-	-	-	-
BN 160L		-	-	17.50	23.40	12.60	16.90
	M 5SC	21.50	28.80	-	-	-	-
BN 180M	**M 5LA**	24.50	32.80	21.50	28.80	-	-
BN 180L	**-**	-	-	25.30	33.90	17.50	23.40
BN 200L	**-**	-	-	34.00	45.50	-	-
BN 200LA	**-**	34.00	45.50	-	-	22.00	30.00

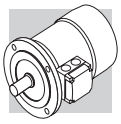

BXN / BX / BE / MXN / MX / ME motors are available at 60 Hz on a 4 pole configuration only, and their power rating is the same as their 50 Hz counterpart. Double speed BN / M motors supplied at 60 Hz will have an increase of nominal power, referred to 50 Hz, equal to 15%, whereas double speed BXN / BX / BE / MXN / MX / ME motors are not available. If a nominal power rating, equal to the normalised nominal power rating at 50 Hz, was requested to be on a nameplate of a motor meant to be voltage supplied at 60 Hz, the PN option shall be specified on the motor designation. Motors normally designed for a 50 Hz frequency may be used on a 60 Hz operating grid, but the related data shall be updated according to the following table. Motors designated for 50 Hz operation show on the nameplate also the values for 60 Hz operation (excluding motors in CUS execution and brake motors). See the following table.

(F17)

	50 Hz	**60 Hz**			
	V - 50 Hz	**V** - 60 Hz	**Pn** - 60 Hz	$\mathbf{M_n}$, $\mathbf{M_a/M_n}$ - 60 Hz	**n** [min^{-1}] - 60 Hz
BX / MX BE / ME	**230/400 Δ/Y**	265 - 460 Δ Y	1	0.83	1.2
	400/690 Δ/Y	460 Δ			
BN / M	**230/400 Δ/Y**	220 - 240 Δ			
		380 - 415 Y			
	400/690 Δ/Y	380 - 415 Δ			
BN / M	**230/400 Δ/Y**	265 - 280 Δ	1.15	1	1.2
		440 - 480 Y			
	400/690 Δ/Y	440 - 480 Δ			

NOTE: For BXN and MXN motors refer to EVOX specific catalogue.

M7.3 Ambient temperature

Catalogue rating values are calculated for 50 Hz operation and for standard ambient conditions (temperature 40 °C; elevation ≤ 1000 m a.s.l.) as per the CEI EN 60034-1 Standards.
The motors can be used within the 40 - 60 °C temperature range with rated power output adjusted by factors given in the table below.

(F18)

Ambient temperature (°C)	40	45	50	55	60
Permitted power as a % of rated power	1.00	0.97	0.94	0.90	0.86

Should a derating factor higher than 15% apply please consult factory.

M7.4 50 HZ normalized power

PN

This option ensures the motor nameplate includes 50 Hz normalized power information even when the motor is designated for 60 Hz operation. The PN option is applied by default in the following cases:

- Standard 60 Hz Voltages: For 230/460V-60Hz and 330/575V-60Hz supplies, regardless of any certification options.
- With “CUS” Option: When the CUS option is selected in combination with the following voltages:
  - 220/440V-60Hz
  - 230/460V-60Hz
  - 240/480V-60Hz
  - 330/575V-60Hz

Duty Cycle Note: These rules apply regardless of the duty type. For instance, a motor configured as 240/480V-60Hz with “CUS” and S3 duty will maintain the same S3 power rating as its 50Hz equivalent by default.

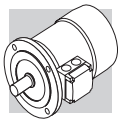

M7.5 Motors for USA and Canada

CUS

CUS option is available in NEMA Design C execution for BN, BE, M, ME motors, and NEMA Design B for BX motors, with regards to the electrical features. The BXN and MXN motors are cURus certified as standard. Motors are certified in compliance with CSA (Canadian Standard) C22.2 N° 100 and UL (Underwriters Laboratory) UL 1004-1 standards, as stated on UL file E308649.
All powers BN-BE-M-ME and BXN-MXN with powers between 0,12 and 0,55kW included motors nameplates show the below marks:

S1 continuous duty BXN/MXN ≥ 0,75kW and BX/MX ≥ 0,75kW motors nameplates show the below marks and are certified in compliance with the energy efficiency standards in effect in the USA and Canada, respectively provided by DOE (10 CFR Part 431) and NRCan (Energy Efficiency Regulations), tested according to CSA C390 standard.

ENERGY

CC320B

BX 100 motors are available for the USA only and not for Canada, and the related marks reported on the nameplates are the following:

ENERGY

CC320B

BX≥200K motors shows on nameplate the logo reported below and are compliant to energy efficiency regulations of USA and Canada, respectively established from DOE (10 CFR Part 431) and from NRCan (Energy Efficiency Regulations), and tested in accordance to CSA C390.

CERTIFIED SAFETY US-CA E473868

NOTES:
Starting from **June, 1st 2016**, CUS motors whose efficiency is below IE3 (i.e. “Premium Efficiency”) cannot be any longer sold in the USA and Canada, unless one or more of the following conditions apply:

- Double speed motors;
- Motors plated for a non - continuous duty (<80%);
- Motors intended to be operated through variable frequency drive only (properly equipped with “Inverter Duty Only” label, or similar).

CUS option is selectable in combination to U1 only for BX≥200K.
As specified under the ANSI C84.1 standard, the US power mains voltages and the corresponding rated voltages to be specified for the motor are indicated in the following table:

(F19)

Frequency	Mains voltage	V_{mot}
60 Hz	208 V	**200 V**
	240 V	**230 V**
	480 V	**460 V**
	600 V	**575 V**

BX motor with CUS option are available with the following nominal Voltage/Frequency combinations:

(F20)

	V_{mot}
BX ≤ 132	265/460 - 60 Hz
BX ≤ 180	230/460 - 60 Hz 330/575 - 60 Hz
BX ≥ 160 BX ≥ 200K BY ≥ 280K	460/800 - 60 Hz

CUS option is applicable onto 50 Hz operating motors as well (motors BX, MX excluded).

M7.6 Motors certified for India

BIS

Low voltage motors ≥0.12kW manufactured or imported in India must comply with the requirements of the Bureau of Indian Standards (BIS), and their nameplates bear the ISI mark.
BE, BX, BXN motors with power up to 7.5kW included, are avaiable with the above mentioned certification and, when BIS option is selected, are provided with the nameplate reporting the following logo:

M7.7 China Compulsory Certification

CCC

Electric motors destined for sale in the People's Republic of China must be certified under the CCC (China Compulsory Certification) system. The following motors are available with CCC certification:
- BN/M motors under 0,12kW rated for S1 continuous duty.
- BN/M motors up to 7 Nm rated for S3 discontinuous duty cycle only.

These motors will show the following CCC mark:

CCC option is not available for servo - ventilated motors.

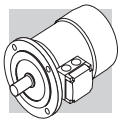

M7.8 Motor certified for China (China Energy Label)

CEL

In addition to the mandatory CCC certification specified above, low voltage motors ≥0.75kW manufactured or imported in China must be certified and registered by the label office and provided with an energy label certifying they meet the energy efficiency levels as defined in GB18613-2012.
BX motors with power from 2.2 to 355kW included are available with the above mentioned certification and, when CEL option is selected, are provided with the following sticker applyed to the motor:

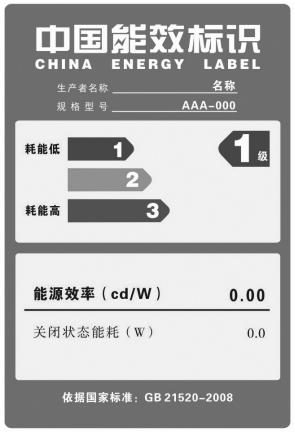

Note: The CEL (China Energy Label) is not needed for discontinuous duty cycle and in case of servo-ventilated motors.

BX motors with CEL option are available with the following nominal Voltage/Frequency combinations:

(F21)

	V_{mot}
BX ≥ 200	380/660 - 50 Hz
100 ≤ BX ≤ 132	230/400 - 50 Hz
160 ≤ BX ≤ 180	400/690 - 50 Hz

M7.9 Motors certified for Brazil

NBR

Brazilan laws regulamentates the manufacturing and importation of electric motor in the country. These have to be approved by NBR trough a declaration of the motor efficiency level at INMETRO. Motor compliant to NBR must report the declared efficiency value and have to be provided with a specific NBR nameplate and the additional mark shown in picture below.



The NBR option is available for motors:
- BX with powers from 0.75 to 22 kW included
- BX… K with powers from 30 to 355 kW included

BX motors with NBR option are available with the following nominal Voltage/Frequency combinations:

(F22)

	V_{mot}
BX90SR ... BX160	220/380 - 60 Hz 220/440 - 60 Hz
BX 180	220/380 - 60 Hz 220/440 - 60 Hz 380/660 - 60 Hz
BX ≥ 200K	440/760 - 60 HZ

M7.10 Motors certified for Australia

EECA

Electric motor covered by Australian/NewZeland's energy regulation must be listed in the national database Energyratig. Mootr with EECA option are registered in the previously mentioned database and can be sold in Australia and New Zeland.
EECA option is available for BX ... K motor with power from 30 to 355kW included.

BX motors with EECA option are available with the following nominal Voltage/Frequency combinations:

(F23)

	V_{mot}
BX ≥ 200K	400/690 - 50 Hz

M7.11 Insulation class

CL F

Bonfiglioli motors use class F insulating materials (enamelled wire, insulators, impregnation resins) as compare to the standard motor. In standard motors, stator windings over temperature normally stays below the 80 K limit corresponding to class B over temperature. A careful selection of insulating components makes the motors compatible with tropical climates and normal vibration. For applications involving the presence of aggressive chemicals or high humidity, contact Bonfiglioli Engineering for assistance with product selection.

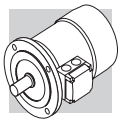

CL H

Motors manufactured in insulation class **H** are available at request.

(F24)

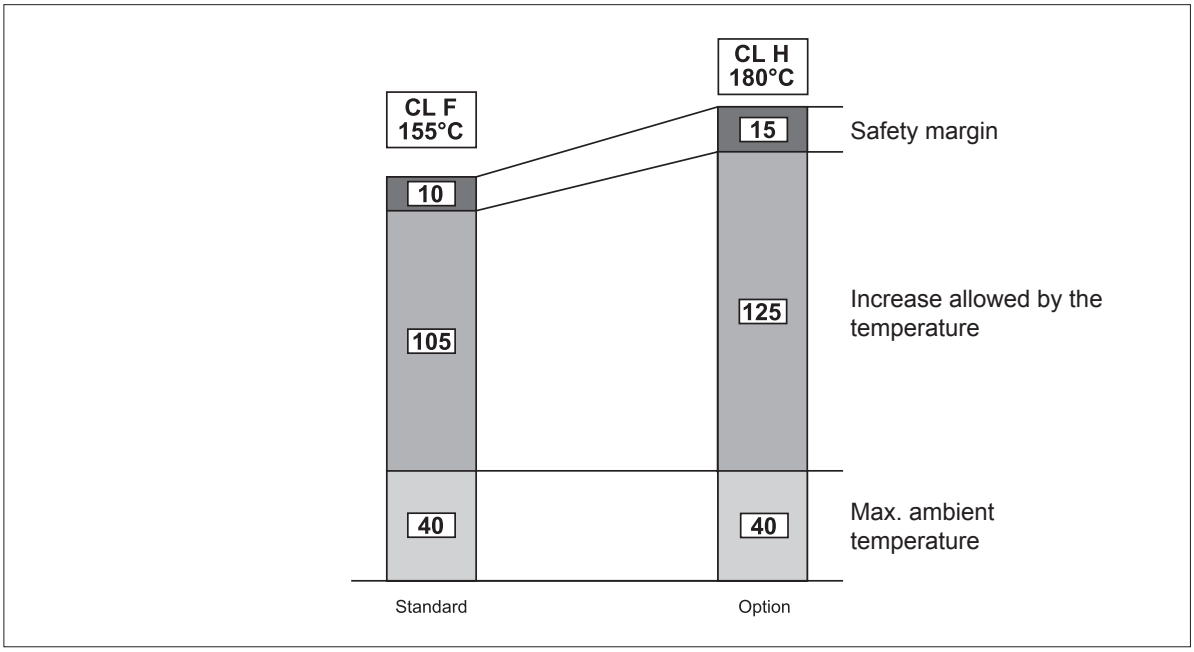

M7.12 Type of duty

Unless otherwise specified, catalogue motor power refers to continuous duty S1. Any operating conditions other than S1 duty must be identified in accordance with duty cycle definitions laid down in standards CEI EN 60034-1. For duty cycles S2 and S3, the power increase co-efficient reported in the following table may be used. Please note that the table provided below applies to single-speed motors. As an alternative to S1 continuous duty, one of the following values can be specified at the product configuration stage (single speed motors only): S2, S3. The motor nameplate will be marked with an increased power rating to suit the type of duty, and with specific electrical data and a duty type of S2-30 min, S3-70% respectively.

BN and M motors can be configured for operation at duty cycle S2(30min) and S3(70%) as standard option, Other requests which are different in terms of % or min are considered a speciality.
BXN and MXN motors can be configured as standard at S2=10min, S2=30min, S2=60min or S3=25%, S3=40%, S3=70%.

(F25)

	Type of duty						
	S2			**S3 ***			**S4 - S9**
	Duration (min)			Intermittence (I)			Contact us **
	10	**30 (*)**	**60**	**25%**	**40%**	**70% (*)**	
f_m	1.35	1.15	1.05	1.25	1.15	1.1	

* Cycle duration must, in any event, be equal to or less than 10 minutes; if this time is exceeded, please contact our Technical Service.
** For any duty cycle different from S1, S2-30min and S3-70% please contact Bonfiglioli's Technical Service.
(*) Default values from options (tab. F05).

M7.12.1 Cyclic duration factor:

$$I = \frac{t_f}{t_f + t_r} \cdot 100 \qquad (01)$$

t_f = work time under constant load
t_r = rest time

M7.12.2 Limited duration duty S2

This type of duty is characterized by operation at constant load for a limited time, which is shorter than the time required to reach thermal equilibrium, followed by a rest period of sufficient duration to restore ambient temperature in the motor.

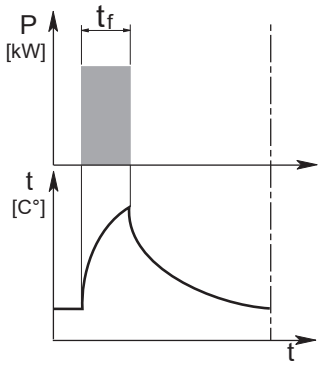

M7.12.3 Periodical intermittent duty S3:

This type of duty is characterized by a sequence of identical operation cycles, each including a constant load operation period and a rest period.

For this type of duty, the starting current does not significantly influence overtemperature.

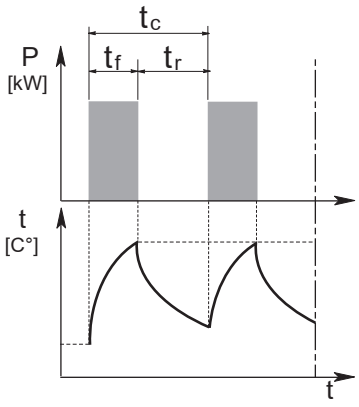

M7.12.4 Duty with non-periodical load and speed variations S9:

This type of duty is characterized by a load and speed variation in which the motor operates generally non-periodically within the permissible operating range. This duty includes frequent overloads which may greatly exceed the full loads.

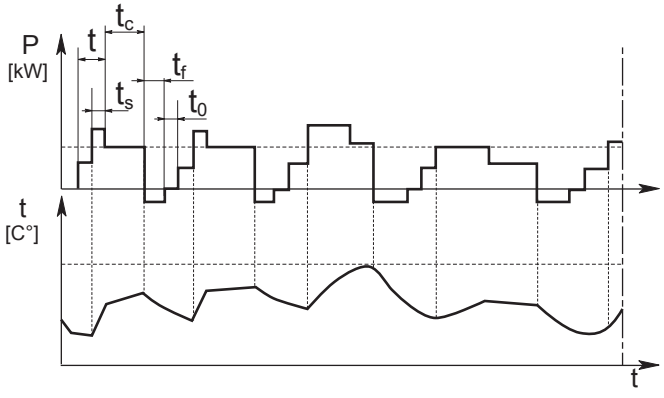

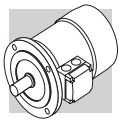

M7.13 Inverter-controlled motors

The electric motors Bonfiglioli may be used in combination with PWM inverters with rated voltage at transformer input up to 500 V.Standard motors use a phase insulating system with separators, class 2 enamelled wire and class H impregnation resins (1600V peak-to-peak voltage pulse capacity and rise edge t_s > 0.1µs at motor terminals). Typical torque/speed curves referred to S1 duty for motors with base frequency f_b = 50 Hz is are reported in the table below. Because ventilation is somewhat impaired in operation at lower frequencies (about 30 Hz), standard motors with incorporated fan (IC411) require adequate torque derating or - alternately - the addition of a separate supply fan cooling.
Above base frequency, upon reaching the maximum output voltage of the inverter, the motor enters a steady-power field of operation, and shaft torque drops with ratio ($f/_{fb}$). As motor maximum torque decreases with ($f/_{fb}$)^2, the allowed overloading must be reduced progressively.

(F26)

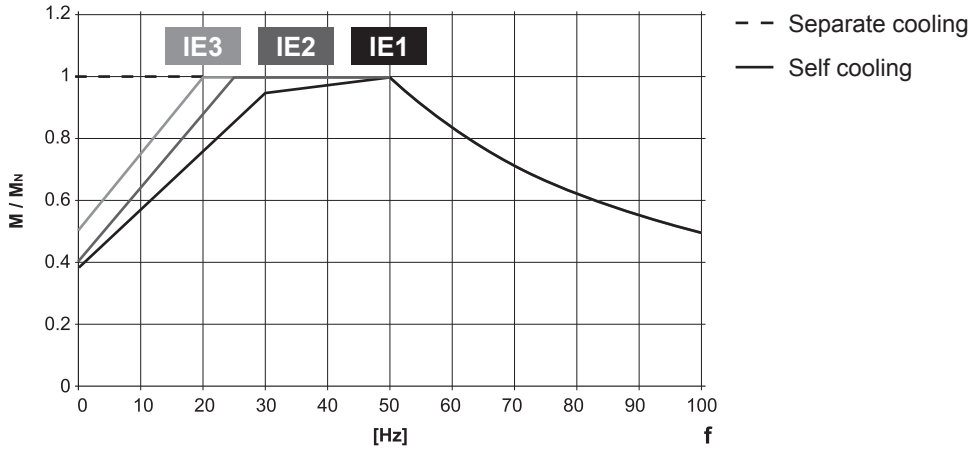

The following table reports the mechanical speed limit for motors operating above rated frequency:

(F27)

		**n** [min^{-1}]		
		2p	**4p**	**6p**
≤ BE 112 - BN 112	**ME2, ME3 M05 ... M3**	5200	4000	3000
≥ BE 132 - BN 132	**ME4, ME5 M4, M5**	4500	4000	3000
BX 63 ... BX 180	**MX05 ... MX5**		4000	
BX 200K			4500	
BX 225K ... BX 250K			3600	
BX 280K, BY 280K			2000	
BX 315K, BX 355K			2200	

Above rated speed, motors generate increased mechanical vibration and fan noise. Class B rotor balancing is highly recommended in these applications. Installing a separate supply fan cooling may also be advisable. Remote-controlled fan and brake (if fitted) must always be connected direct to mains power supply.

M7.14 Permissible starts per hour, Z

The rating charts of brakemotors lend the permitted number of starts Z0, based on 50% intermittence and for unloaded operation.
The catalogue value represents the maximum number of starts per hour for the motor without exceeding the rated temperature for the insulation class F.
To give a practical example for an application characterized by inertia Jc, drawing power Pr and requiring mean torque at start-up ML the actual number of starts per hour for the motor can be calculated approximately through the following equation:

$$Z = \frac{Z_0 \cdot K_c \cdot K_d}{K_J} \qquad (02)$$

where:

$K_J = \frac{J_m + J_c}{J_m}$	inertia factor
$K_c = \frac{M_a - M_L}{M_a}$	torque factor
$K_d =$	load factor, see the following table

(F28)

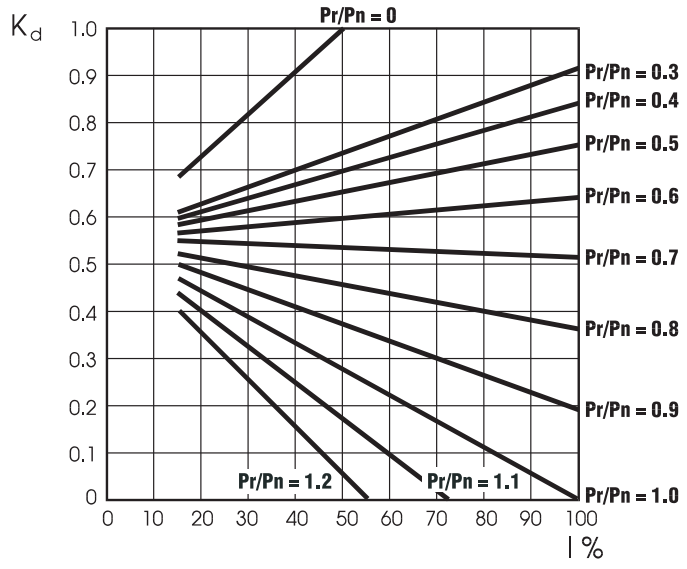

If actual starts per hour is within permitted value (Z) it may be worth checking that braking work is compatible with brake (thermal) capacity Wmax also given in tables (F38), (F41) and dependent on the number of switches (c/h).

M8 BRAKE MOTORS - DIRECT CURRENT BRAKE FOR BX-BE-BX | MX-ME-M

M8.1 Operation

Versions with incorporated brake use spring-applied DC (FD option) brakes.
All brakes are designed to provide fail-safe operation, meaning that they are applied by spring-action in the event of power failure.

(F29)

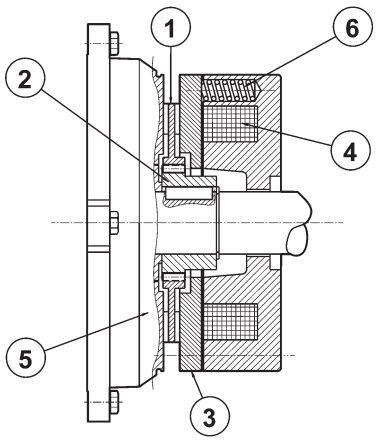

Key:
① brake disc
② disc carrier
③ pressure plate
④ brake coil
⑤ motor rear shield
⑥ brake springs

When voltage is interrupted, pressure springs push the armature plate against the brake disc. The disc becomes trapped between the armature plate and motor shield and stops the shaft from rotation.
When the coil is energized, a magnetic field strong enough to overcome spring action attracts the armature plate, so that the brake disc – which is integral with the motor shaft – is released.

M8.2 Most significant features

- High braking torques (normally Mb ≈ 2 Mn), braking torque adjustment.
- Steel brake disc with double friction lining (low-wear, asbestos-free lining).
- Hexagonal seat on motor shaft fan end (N.D.E.) for manual rotation (not compatible with options PS, RC*, TC*, U1, U2, EN1, EN2, EN3, EN4, EN5, EN6).
- Manual release lever (options R and RM for FD).
- Corrosion-proof treatment on all brake surfaces.
- Insulation class F.

(*) Not accessible without removing the fan cover

Frame sizes: BX 63 ... BX 180, BX200LAK … BX 355MCK - BE 63 ... BE 180L - BN 63 … BN 200L / MX05 ... MX5 - ME05 ... ME5 - M05 ... M5

(F30)

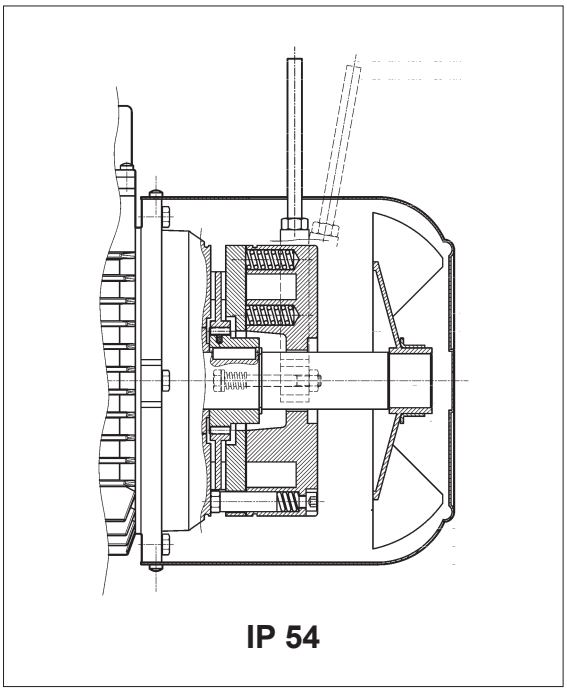

IP 54

(F31)

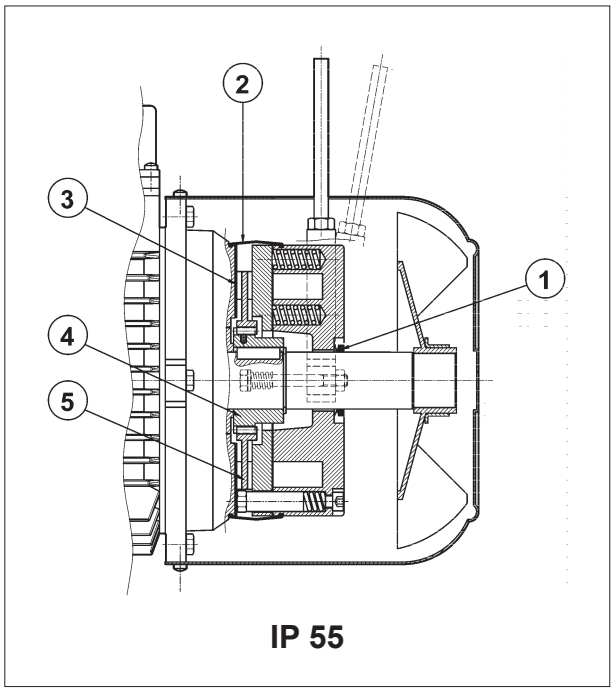

IP 55

Direct current toroidal-coil electromagnetic brake bolted onto motor shield. Preloading springs provide axial positioning of magnet body.
Brake disc slides axially on steel hub shrunk onto motor shaft with anti-vibration device.
Brake torque factory setting is indicated in the corresponding motor rating charts. Braking torque may be modified by changing the type and/or number of springs.
At request, motors may be equipped with manual release lever with automatic return (**R**) or system for holding brake in the released position (**RM**).
See variant at paragraph “BRAKE RELEASE SYSTEMS” for available release lever locations.
FD brakes ensure excellent dynamic performance with low noise. DC brake operating characteristics may be optimized to meet application requirements by choosing from the various rectifier/power supply and wiring connection options available.
For applications involving lifting and/or high hourly energy dissipation, contact Bonfiglioli’s Technical Service.

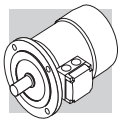

M8.3 Degree of protection

The standard protection degree for BN - M, BE - ME, BX≤180 and MX is IP54, while for BX...K200 standard protection degree is IP55.
BN - M, BE - ME and BX≤180 - MX brakemotor with a standard protection degree IP54 can be requested with a protection degtree IP55. If **IP55** is selected the following construction variants will be applied:

① V-ring at N.D.E. of motor shaft
② dust and water-proof rubber boot
③ stainless steel ring placed between motor shieldand brake disc
④ stainless steel hub
⑤ stainless steel brake disc

M8.4 FD brake power supply

A rectifier accommodated inside the terminal box feeds the DC brake coil. Wiring connection across rectifier and brake coil is performed at the factory.
Brake power supply voltage V_B is as indicated in the following table, regardless of mains frequency:

(F32)

FD brake supply voltages				
Brake power supply voltage V	FD brake			
	Power supply from the motor with rectifier NB|SB	Power sopply from the motor with rectifier NBR|SBR	Separate power supply with rectifier	Power supply without rectifier
24	✗	✗	✗	✓
100	✗	✗	✗	✓
110	✗	✗	✓	✗
115	✗	✗	✓	✗
120	✗	✗	✓	✗
127	✗	✗	✓	✗
180	✗	✗	✗	✓
208	✓	✗	✓	✗
220	✓	✗	✓	✗
230	✓	✓	✓	✓
240	✓	✗	✓	✗
255	✓	✗	✗	✗
265	✓	✗	✗	✗
280	✓	✗	✗	✗
290	✓	✗	✗	✗
330	✓	✗	✗	✗
380	✓	✗	✓	✗
400	✓	✓	✓	✗
415	✓	✗	✓	✗
440	✓	✗	✓	✗
460	✓	✗	✓	✗
480	✓	✗	✓	✗
500	✓	✗	✓	✗

The diode half-wave rectifier (VDC ≈ 0,45 x VAC) is available in versions **NB, SB, NBR** e **SBR**, as detailed in the table below:

(F33)

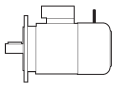		brake	~ / ⎓	
			standard	on request
BX 63 - BE 63 - BN 63	**MX05 - ME05 - M05**	FD 02	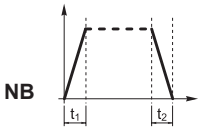	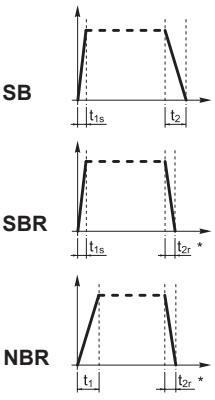
BX 71 - BE 71 - BN 71	**MX1 - ME1 - M1**	FD 03 FD 53		
BX 80 - BE 80 - BN 80	**MX2 - ME2 - M2**	FD 04		
BX 90S - BE 90S - BN 90S	**—**	FD 14		
BX 90L - BN 90L - BN 90L	**—**	FD 05		
BX 100 - BE 100 - BN 100	**MX3 - ME3 - M3**	FD 15		
—		FD 55	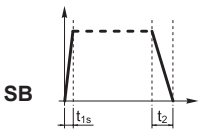	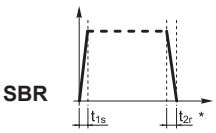
BX 112 - BE 112 - BN 112	**—**	FD 06S		
BX 132 - BE 132 - BN 132 - BN 160MR	**MX4 - ME4 - M4**	FD 56 FD 06 FD 07		
BX 160 - BE 160L - BN 160L - BN 180M	**MX5 - ME5 - M5**	FD 08		
BX 180 - BE 180L - BN 180L - BN 200M	**—**	FD 09		
BX 200LAK	**—**	FD 8	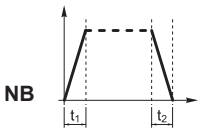	⛔
BX 225SAK - BX 225SBK	**—**	FD 9		
BX 250MAK	**—**	FD 10		
BX 280SAK - BX 315SAK	**—**	FD 1000		
BX 315SBK - BX 315SCK	**—**	FD 1600		
BX 355SAK - BX 355MCK	**—**	FD 2500	⛔	

Rectifier **SB** with electronic energizing control over-energizes the electromagnet upon power-up to cut brake release response time and then switches to normal half-wave operation once the brake has been released.

Use of the **SB** rectifier is mandatory in the event of:
- high number of operations per hour
- reduced brake release response time
- brake is exposed to extreme thermal stress

Rectifiers **NBR** or **SBR** are available for applications requiring quick brake intervention (braking condition reinstatement) response.
These rectifiers complement the **NB** and **SB** types as their electronic circuit incorporates a static switch that de-energizes the brake quickly in the event voltage is missing.
This arrangement ensures short brake release response time with no need for additional external wiring and contacts.
Optimum performance of rectifiers **NBR** and **SBR** is achieved with separate brake power supply.

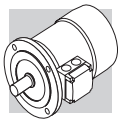

M8.5 FD brake technical specifications

The table below reports the technical specifications of DC brakes FD.

(F34)

Brake	Brake torque M_b [Nm]			Release		Braking		W_{max} per brake operation			W	P
	springs			t_1	t_{1s}	t_2	t_{2c}	[J]				
	6	4	2	[ms]	[ms]	[ms]	[ms]	10 s/h	100 s/h	1000 s/h	[MJ]	[W]
FD02	–	3.5	1.75	30	15	80	9	4500	1400	180	15	17
FD03	5	3.5	1.75	50	20	100	12	7000	1900	230	25	24
FD53	7.5	5	2.5	60	30	100	12					
FD04	15	10	5	80	35	140	15	10000	3100	350	30	33
FD14												
FD05	40	26	13	130	65	170	20	18000	4500	500	50	45
FD15	40	26	13	130	65	170	20					
FD06S	60	40	20	–	80	220	25	20000	4800	550	70	55
FD56	–	75	37	–	90	250	20	29000	7400	800	80	65
FD06		100	50		100	250	20					
FD07	150	100	50	–	120	200	25	40000	9300	1000	130	65
FD08*	250	200	170	–	140	350	30	60000	14000	1500	230	100
FD09**	400	300	200	–	200	450	40	70000	15000	1700	230	120
FD8	400			176	78	236	-	65000	7000	650	-	85
FD9	600			324	138	176	-	120000	12000	1200	-	100
FD10	800			480	194	172	-	100000	16000	2000	-	150
FD1000	1000			252	-	375	-	220000	27000	2700	-	300
FD1600	1600			366	-	498	-	230000	35000	3500	-	340
FD2500	2500			660	-	880	-	590000	61000	6100	-	530

* brake torque values obtained with 9, 7 and 6 springs, respectively

** brake torque values obtained with 12, 9 and 6 springs, respectively

t_1 = brake release time with half-wave rectifier
t_{1s} = brake release time with over-energizing rectifier
t_2 = brake engagement time with AC line interruption and separate power supply
t_{2c} = brake engagement time with AC and DC line interruption – Values for t_1, t_{1s}, t_2, t_{2c} indicated in the tab. (F34) are referred to brake set at maximum torque, medium air gap and rated voltage
W_{max} = max energy per brake operation
W = braking energy between two successive air gap adjustments
P_b = brake power absorption at 20 °C
M_b = static braking torque (±15%
s/h = starts per hour

The brake pad wear depends on the operating/ambient conditions (temperature, humidity, angular speed, specifica pressure); Therefore the declared wear rate must be considered as indicative.

M8.6 FD brake connections

On standard single-pole motors, the rectifier is connected to the motor terminal board at the factory.
For switch-pole motors and where a separate brake power supply is required, connection to rectifier must comply with brake voltage VB stated in motor name plate.
Because the load is of the inductive type, brake control and DC line interruption must use contacts from the usage class AC-3 to IEC 60947-4-1.

Table (F35+F39) – Brake coil with power supply from motor terminals (DIR) and AC line interruption.
Delayed stop time t2 and function of motor time constants.
Mandatory when soft-start/stops are required.
Table (F36+F40) – Brake coil with separate power supply (SA) and AC line interruption.
Normal stop time independent of motor.
Achieved stop times t2 are indicated in the table (F34).
Table (F37+F41) – Brake coil with power supply from motor terminals (DIR) and AC/DC line interruption.
Quick stop with operation times t2c as per table (F34).
Table (F38+F42) – Brake coil with separate power supply (SA) and AC/DC line interruption.
Stop time decreases by values t2c indicated in the table (F34).

(F35)

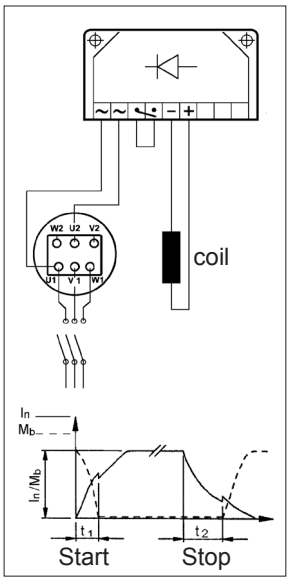

(F36)

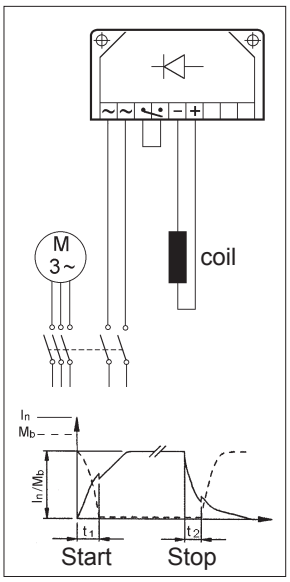

(F37)

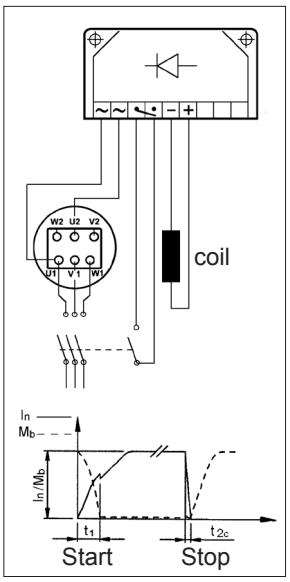

(F38)

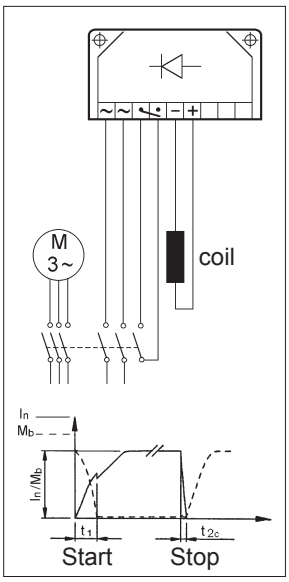

M9 BRAKE RELEASE SYSTEMS

Spring-applied brakes type FD may be equipped with optional manual release devices. These are typically used for manually releasing the brake before servicing any machine or plant parts operated by the motor.

(F39)

R

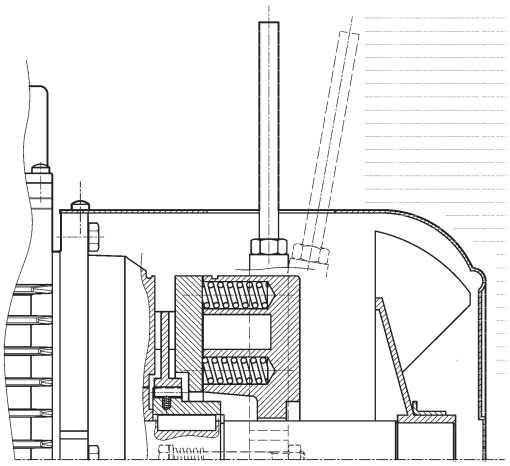

A return spring brings the release lever back in the original position.

(F40)

RM

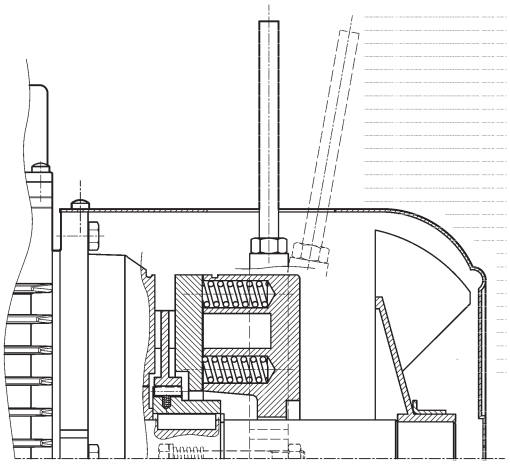

On brake motors type FD, if the option RM is specified, the release device may be locked in the ”release” position by tightening the lever until its end becomes engaged with a brake housing projection.
The availability for the various disengagement devices is charted here below:

(F41)

	R	RM
BX_FD **BE_FD** **BN_FD**	**BX 63 ... BX 180** **BX 200K ... BX 315K** **BE 63 ... BE 180** **BN 63 ... BN 200**	**BX 63 ... BX 132** **BE 63 ... BE 132** **BN 63 ... BN 132** **⛔ FD07**
MX_FD **ME_FD** **M_FD**	**MX05 ... MX5** **ME05 ... ME5** **M05 ... M5**	**MX05 ... MX4** **ME05 ... ME4** **M05 ... M4LA**

M9.1 Release lever orientation

Unless otherwise specified, the release lever is located 90° away from the terminal box – identified by letters [**AB**] in the diagram below – in a clockwise direction on both options **R** and **RM**. Alternative lever positions [**AA**], [**AC**] and [**AD**] are also possible when the corresponding option is specified:

(F42)

AA

AC

AD

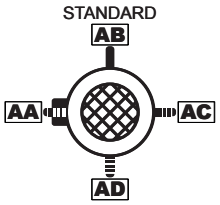

M9.2 Separate brake supply

...SA

Separate AC brake supply
The brake coil is directly powered through an independent line, separated from the motor one.
FD-NB/SB-SA: the rated AC voltage which power the rectifier must be specified. E.G. SA 400 (V AC).

...SD

Separate DC brake supply
The brake coil is directly powered with a DC current and the rectifier is not present.
The rated coil voltage must be specified, E.G. SD 24 (V DC).
Note: for BX...K200 it is not possible to directly feed the brake from the motor terminal box, it is then necessary to select option SA or SD.

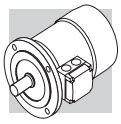

M10 OPTIONS

M10.1 Soft-start / stop

F1

An optional flywheel - option F1 - is available for applications requiring soft starting or stopping. The flywheel's added inertia uses up kinetic energy during starting and returns it back during braking, thus catering for more progressive and gradual shock loads. The optional flywheel is available for brake motors type BN-BE_FD and M-ME_FD with specific characteristics as detailed in the table below:

(F43)

Main data for flywheel of motore type: BN-BE_FD, M-ME_FD			
		**Fly-wheel weight [Kg]**	**Fly-wheel inertia [Kgm²]**
BN 63 - BE 63	**M05 - ME05**	0.69	0.00063
BN 71 - BE 71	**M1 - ME1**	1.13	0.00135
BN 80 - BE 80	**M2 - ME2**	1.67	0.00270
BN 90 S - BN 90 L - BE 90 S - BE 90 LA	**–**	2.51	0.00530
BN 100 - BE 100	**M3 - ME3**	3.48	0.00840
BN 112 - BE 112	**–**	4.82	0.01483
BN 132 S - BN 132 M - BE 132 S - BE 132 M	**M4 - ME4**	6.19	0.02580

M10.2 Capacitive filter

CF

An optional capacitive filter is available for brake motors type FD only. When the suitable capacitive filter is installed upstream of the rectifier (option CF), motors comply with the emission limits required by standard EN61000-6-3:2007 "Electromagnetic Compatibility – Generic Emission Standard – Part 6-3: Residential, commercial and light industrial environment".
BX≥200LA and BX≥200LAK motors comply with the emission limits required by standard EN 61000-6-3:2007 "Electromagnetic Compatibility - Generic Emission Standard - Part 6-3: residential, commercial and light industrial environment."

M10.3 Thermal protective devices

In addition to the standard protection provided by the magneto-thermal device, motors can be supplied with built-in thermal probes to protect the winding against overheating caused, by insufficient ventilation or by an intermittent duty.
This additional protection should always be specified for servoventilated motors (IC416).

M10.4 Thermistors

E3

These are semi-conductors having rapid resistance variation when they are close to the rated switch off temperature (150 °C). Variations of the R = f(T) characteristic are specified under DIN 44081, IEC 34-11 Standards. Positive temperature coefficient thermistors are normally used (also known as PTC "cold conductor resistors"). Thermistors cannot control relays directly and must be connected to a suitable disconnect device. Thus protected, three PTCs connected in series are installed in the winding, the terminals of which are located on the auxiliary terminal-board.

K1

The design characteristics of this sub-group of PTC thermistors allow them to be used as positive temperature coefficient sensors with variable resistance.
Functioning temperature range: 0°C ... +260°C.
Thermistors cannot control relays directly and must be connected to a suitable disconnect device.
Terminals (polarised) for 1 x KTY 84-130 are provided on an auxiliary terminal strip.

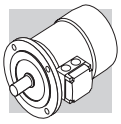

M10.5 Bimetallic thermostates

D3

These types of protective devices house a bimetal disk. When the rated switch off temperature (150 °C) is reached, the disk switches the contacts from their initial rest position.
As temperature falls, the disk and the contacts automatically return to rest position.
Three bimetallic thermostates connected in series are usually employed, with normally closed contacts. The terminals are located on an auxiliary terminal-board.

M10.6 Temperature sensors

The platinum elements resistance thermometers on the basis of PT100, PT1000 are used everywhere in the industrial temperature measurement where low to medium temperatures are measured.
They offer the advantage of meeting international standards (IEC 751 / DIN EN 60 751), have a good long-term stability, a reliable behaviour over temperature cycles and a wide temperature range as well as a high measurement accuracy and linearity.
The resistance thermometer has a chip for a temperature sensor, the resistance of which changes in relation to temperature according to a series of reproducible basic values. The changes in resistance are transferred as changes in current.

PT100

At 0 °C, the nominal resistance is adjusted to 100 Ω

M10.7 Plug connector

CON

Three types of connectors (CON 1, CON 2, CON 3) are provided; they can be mounted in two different positions: right side of terminal box cover (C1D, C2D, C3D); left side of terminal box cover (C1S, C2S, C3S).
The option CON is applicable to single speed BN and M motors (2, 4, 6, 8 poles), and BX / BE and MX / ME motors on the sizes specified on the following table. All double speed motors are excluded.
The connectors CON 1 / CON 2 are available for BX-BE/MX-ME and BN/M motors without brake and for brakemotors equipped with DC brake type FD, for the motor sizes listed below.
The male connector (with pins) is mounted on the motor, the female connector is not provided. With CON option, the winding connection is always Y.
With option U1 “forced ventilation”, the fan unit supply is available inside the separate terminal box fixed to fan cover. With options EN1...EN6, the encoder connection is made by a cable not connected to the motor plug connector.
The CON option is not applicable to brakemotors equipped with AC brake type FA.
The CON option is not available when at least one of the next options are selected: the U2, CUS, IC.

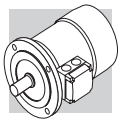

Specifications

(F46)

Option	**CON 1**
Motor size	**BX 63 ... BX 112 / MX05, MX3 / BE 63 ... BE 112 / ME05 ... ME4** **BN 63 … BN 112 / M05 ... M3**
Connector view	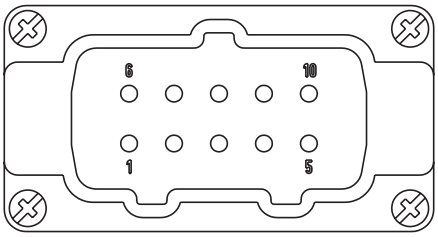
Type of connector	Harting Han 10ES
Housing	Han EMC 10B with 2 levers
Numbers of pins - nominal current	10 x 16A
Voltage	500 Vac
Contact connection	Screw terminals

(F44)

Option	**CON 2**
Motor size	**BX 63 ... BX 132 / MX05, MX3 / BE 63 ... BE 132 / ME05 ... ME4** **BN 63 … BN 160MR / M05 ... M4**
Connector view	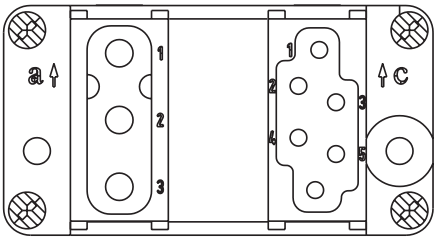
Type of connector	Harting Han Modular
Housing	Han EMC 10B with 2 levers
Module type	Module C + Module E + Module E
Numbers of pins - nominal current	3 x 36A / 6 x 16A
Voltage	500 Vac
Contact connection	Crimping contacts

(F45)

Option	**CON 3**
Motor size	**BX 63 ... BX 132M / MX05, MX3 / BE 63 ... BE 132 / ME05 ... ME4 /** **BN 63 … BN 160MR / M05 ... M4**
Connector view	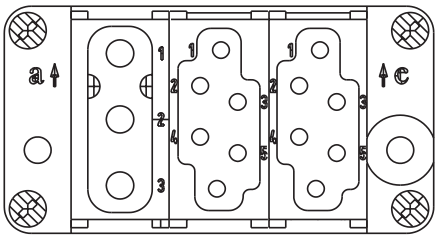
Type of connector	Harting Han Modular
Housing	Han EMC 10B with 2 levers
Module type	Module C + Module E + Module E
Numbers of pins - nominal current	3 x 36A / 6 + 6 x 16A
Voltage	500 Vac
Contact connection	Crimping contacts

(F47)

Connector orientation

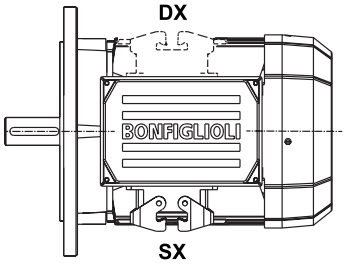

(F48)

Motors without brake dimensions

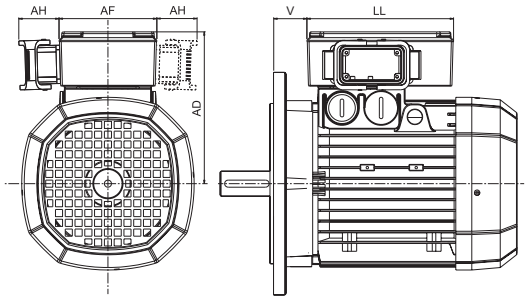

		AD (mm)	A**F** (mm)	A**H** (mm)	**LL** (mm)	**V**(*) (mm)
BX 63 - BE 63 - BN 63	**MX05 - ME05 - M05**	136	110	45	165	4.5
BX 71 - BE 71 - BN 71	**MX1 - ME1 - M1**	149	110	45	165	15.5
BX 80 - BE 80 - BN 80	**MX2 - ME2 - M2**	160	110	45	165	16.5
BX 90 - BE 90 - BN 90	**MX3**	162	110	45	165	31.5
BX 100 - BE 100 - BN 100	**MX3 - ME3 - M3**	171	110	45	165	37.5
BX 112 - BE 112 - BN 112	**MX4**	186	110	45	165	39
BX 132 - BE 132 - BN 132	**MX4 - ME4 - M4**	210	140	45	188	45.5
BN 160MR	**–**	210	140	45	188	161

(*) Dimension valid only for motors BX, BE and BN.

(F49)

Motors with FD brake dimensions

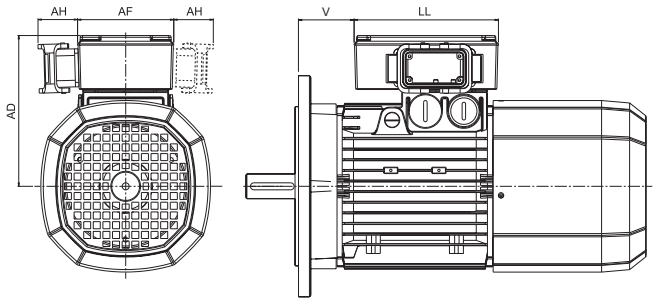

		AD (mm)	A**F** (mm)	**AH** (mm)	**LL** (mm)	**V**(*) (mm)
BX 63 - BE 63 - BN 63	**MX05 - ME05 - M05**	136	110	45	165	4.5
BX 71 - BE 71 - BN 71	**MX1 - ME1 - M1**	149	110	45	165	1.5
BX 80 - BE 80 - BN 80	**MX2 - ME2 - M2**	160	110	45	165	18.5
BX 90 - BE 90 - BN 90	**—**	162	110	45	165	39.5
BX 100 - BE 100 - BN 100	**MX3 - ME3 - M3**	171	110	45	165	63.5
BX 112 - BE 112 - BN 112	**—**	186	110	45	165	75
BX 132 - BE 132 - BN 132	**MX4 - ME4 - M4**	210	140	45	188	122
BN 160MR	**—**	210	140	45	188	161

(*) Dimension valid only for motors BN.and BX

M10.8 Control of brake operation

This variant specifies the presence of electromechanical sensors designed to provide real-time feedback on the brake's condition.

MSW

The microswitch can be set in order to obtain from it a signal related to the attraction/release of anchor plate, or it can be set in order to give feedback when the air gap reaches the maximum value.

MSW option is available for brakes FD03...FD09.

The microswitch is provided with three lead wires (NC, NO, COM). The next figure shown the main components of the brake equipped with microswitch.

(F50)

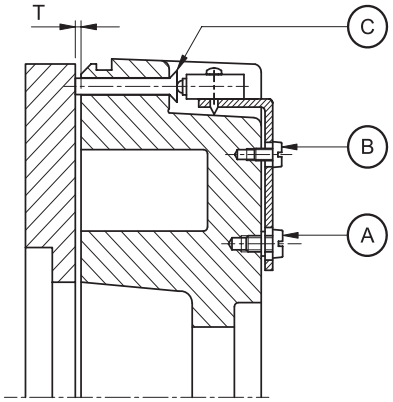

A: Plate f xing screws
B: Setting screws
C: Actuator control pin

M10.9 Additional cable entry for brakemotors

IC

The terminal box cover of brakemotors BN 63 ... BN 160MR - M05 ... M4L is provided with two additional cable entry M16 x 1.5 (one cable entry per side).

The terminal box cover of brakemotors BN 160 ... BN 200 - M5 is provided with an additional cable entry M16 x 1.5 next to the cable entry used for the brake.

M10.10 Anti-condensation heaters

H1 **NH1**

Where an application involves high humidity or extreme temperature fluctuation, motors may be equipped with an anti-condensate heater.
A single-phase power supply is available in the auxiliary terminal board inside the main terminal box.
Values for the absorbed power are listed here below:

(F52)

	H1	NH1
	1~ 230V ± 10% P [W]	**1~ 115V ± 10% P [W]**
BX 63 ... BX 80 BE 63 ... BE 80 BN 56 ... BN 80	10	10
BX 90 ... BX 132 BE 90 ... BE 132MB BN 90 ... BN 160MR	25	25
BX 160...BX 180 BX 200K ... BX 250K BE 160, BE 180 BN 160, BN 200	50	50
BY 280K BX 280K	60	60
BY 315K ... BY 355K BX 315K ... BX 355K	120	120

Warning!
Always remove power supply to the anti-condensante heater before operating the motor.

M10.11 Tropicalization

TP

When option **TP** is specified, motor windings receive additional protection for operation in high humidity and temperature conditions.

M10.12 Second shaft extension

PS

This option is not compatible with variants RC, TC, U1, U2, EN1, EN2, EN3, EN4, EN5, EN6, EN7, EN8.
For shaft dimensions please see motor dimensions tables.

(F51)

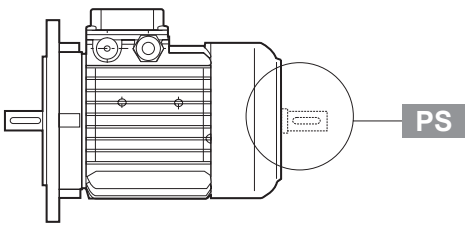

M10.13 Backstop device

AL **AR**

For applications where backdriving must be avoided, motors equipped with an anti run-back device can be used (available for the MX/ME and M series only). While allowing rotation in the direction required, this device operates instantaneously in case of a power failure, preventing the shaft from running back. The anti run-back device is life lubricated with special grease for this specific application. When ordering, customers should indicate the required rotation direction, AL or AR.
Never use the anti run-back device to prevent reverse rotation caused by faulty electrical connection. Table (F62) shows rated and maximum locking torques for the anti run-back devices. A diagram of the device can be seen in Table (F63). Overall dimensis are same as the corresponding brake motor. The direction of free rotation is described in the “MOTOR OPTIONS” section of specifically dedicated sections to gear units.

(F53)

	Rated locking torque	Max. locking torque	Release speed
	[Nm]	[Nm]	[min^{-1}]
MX1 - ME1 - M1	6	10	750
MX2 - ME2 - M2	16	27	650
MX3 - ME3 - M3	54	92	520
MX4 - ME4 - M4	110	205	430

(F54)

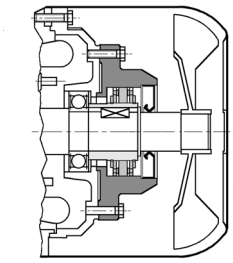

The direction of free rotation allowed for AR and AL option is shown below:

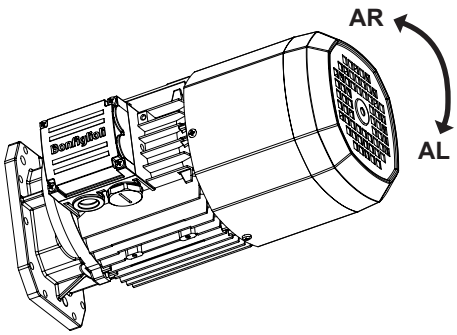

M10.14 Rotor balancing

RV

Where low noise is a priority requirement, the option RV ensures reduced vibration in accordance with vibration class B.
The table below reports effective velocity of vibration for normal (A) and B grade balancing.

(F55)

Vibration level	Angular velocity n [min^{-1}]	Limits of the vibration velocity (mm/s) **BY 280K ≤ H ≤ BY 355K** **BX 63 ≤ H ≤ BX 355MK** **BE 63 ≤ H ≤ BE 180L** **BN 56 ≤ H ≤ BN 200**
A	600 < n < 3600	1.6
B	600 < n < 3600	0.70

Values are obtained from measurements on freely suspended motor during noload operation; tolerance ±10%.

M10.15 Ventilation

Motors are cooled through outer air blow (IC 411 according to CEI EN 60034-6) and are equipped with a plastic radial fan, which operates in both directions.
Ensure that fan cover is installed at a suitable distance from the closest wall so to allow air circulation and servicing of motor and brake, if fitted.
Motor is cooled by an axial fan with independent power supply and fitted on the fan cover (IC 416 cooling system).
This version is used in case of motor driven by inverter so that steady torque operation is possible even at low speed or when high starting frequencies are needed.
Brake motors of motors with rear shaft projection (PS option) are excluded.
This variant has two different models, called U1 and U2, having the same longitudinal size. Longer side of fan cover (DL) is specified for both models in the table below. Overall dimension can be reckoned from motor size table.

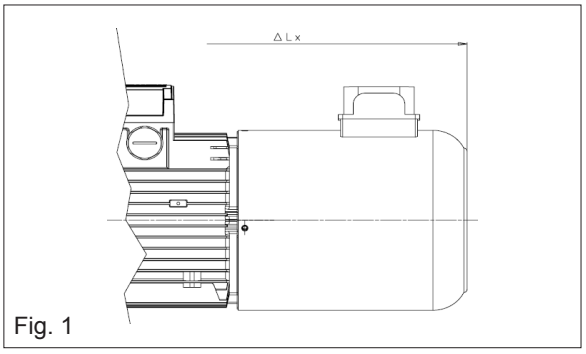

Fig. 1

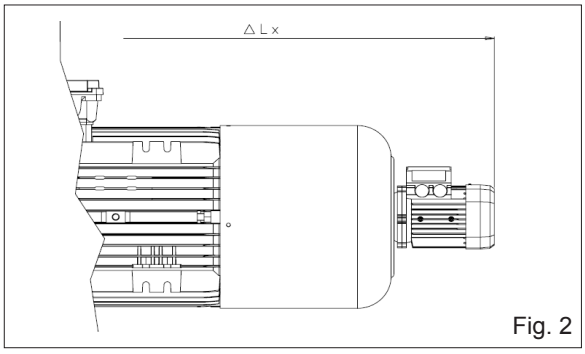

Fig. 2

(F56)

Extra length for servoventilated motors						
		**Δ L_1**	**Δ L_2**	**Δ L_3**	**Δ L_4**	
BX 71 - BE 71 - BN 71	**MX 1 - ME 1 - M 1**	91	30	91	65	**Fig. 1**
BN 80 - BE 80	**M 2 - ME 2**	125	54	125	79	
BX 80 (1)	**MX 2** (1)	80	67	80	67	
BN 90 - BE 90 - BX 90	**MX 2** (2)	132	49	132	85	
BN 100 - BE 100	**M 3 - ME 3**	117	29	117	89	
—	**MX 3SA - MX 3SB**	117	88	117	88	
BX 100	**MX 3LA - MX 3LB**	135	88	135	88	
BN 112 - BE 112	**—**	127	33	127	83	
BX 112	**—**	136	90	136	90	
BN 132 - BE 132 - BN 160MR	**M 4 - ME 4**	158	51	158	122	
BE 132MB	**M 4LC - ME 4LB**	123	27	123	98	
BX 132SB (1)	**MX 4SA - MX 4SB** (1)	158	142	158	122	
BX 132MA (1)	**MX 4LA** (1)	125	118	98	118	
BX 132 (2)	**MX 4LA** (2) **- MX 4SB** (2)	171	83	171	100	
BN 160 - BE 160	**M 5 - ME 5**	181	181	253	211	**Fig. 2**
BX 160	**MX 5**	315	211	249	211	
BN 180M	**—**	181	181	253	211	
BN 180L - BE 180 - BN 200	**—**	181	181	263	211	
BX 180	**—**	341	201	263	201	
BX 200K	**—**	260	260	385	440	
BY 225K - BY 250K **BX 225K - BX 250K**	**—**	320	320	405	386	
BY 280K - BY 315K **BX 280K - BX 315K**	**—**	430	430	580	460	
BY 355K **BX 355K**	**—**	640	640	775	640	

ΔL_1 = Standard motor + U1 - delta compared to STD.
ΔL_2 = Brakemotor + U1 - delta compared to FD.
ΔL_3 = Standard motor + Encoder + U1 - delta compared to STD.
ΔL_4 = Brakemotor + Encoder + U1 - delta compared to FD.

(1) = no CUS no NBR.
(2) = CUS or NBR

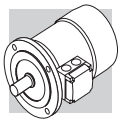

U1

Fan wiring terminals are housed in a separate terminal box.
In brake motors of size BX 71 ... BX 160 - BE 71 ... BE 160 - BN 71 ... BN 160MR, MX1 - MX5 - ME1 ... ME5 - M1 ... M5 with **U1** model, the release lever cannot be positioned to AA.
This option can be selected for motors compliant with CSA and UL standards (CUS option), only for BX ≥ 200K.

(F57)

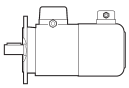

		**V a.c.** ±10%	**Hz**	**P** [W]	**I** [A]
BX 71 - BE 71 - BN 71	**MX1 - ME1 - M1**	1 ~ 230	50 / 60	22	0.12
BX 80 - BE 80 **BN 80**	**MX2 - ME2** **M2**			22	0.12
BX 90 - BE 90 **BN 90**	**–**			40	0.30
BX 100 - BE 100 **BN 100**	**MX3 - ME3** **M3**			50	0.25
BX 112 - BE 112 **BN 112**	**–**	3 ~ 230Δ / 400Y		50	0.26 / 0.15
BX 132 - BE 132 **BN 132 ... BN 160MR**	**MX4 - ME4** **M4L**			110	0.38 / 0.22
BX 160 - BE 160 **BN 160M ... BN 180M**	**MX5 - ME5** **M5**		50	180	1.23 / 0.71
BX 180 - BE 180 **BN 180L ... BN 200L**	**–**			250	1.39 / 0.80
BX 200K ... BX 250K	**–**	3 ~ 400Δ / 690Y		250	0.64
BY 280K .. BY 315K **BX 280K ... BX 315MK**	**–**			750	1.7
BY 315K .. BY 355K **BX 315LK ... BX 355SK**	**–**			1500	3.3
BY 355K **BX 355MK**	**–**			3000	6.1

U2

Fan terminals are wired in the motor terminal box.
The **U2** option does not apply to motors BX, BE, MX, ME and to motors with option CUS (compliant to norms CSA and UL).

(F58)

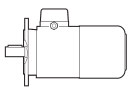

		**V a.c.** ±10%	**Hz**	**P** [W]	**I** [A]
BN 71	**M1**	1 ~ 230	50 / 60	22	0.12
BN 80	**M2**			22	0.12
BN 90	**–**			40	0.30
BN 100	**M3**	3 ~ 230Δ / 400Y		40	0.26 / 0.09
BN 112	**–**			50	0.26 / 0.15
BN 132 ... BN 160MR	**M4L**			110	0.38 / 0.22

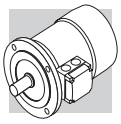

M10.16 Rain canopy

RC

The rain canopy protects the motor from dripping and avoids the ingress of solid bodies. It is recommended when motor is installed in a vertical position with the shaft downwards.
Relevant dimensions are indicated in the table below.
The drip cover is not compatible with variants PS, EN1, EN2, EN3, EN4, EN5, EN6.

(F59)

		AQ	ΔV	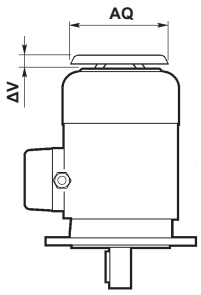
BX 63 - BE 63 - BN 63	**MX 05 - ME 05 - M 05**	118	24	
BX 71 - BE 71 - BN 71	**MX1 - ME1 - M1**	134	27	
BX 80 - BE 80 BN 80	**MX2 - ME2 M2**	152	25	
BX 90 - BE 90 BN 90	**—**	168	30	
BX 100 - BE 100 BN 100	**MX3 - ME3 M3**	190	28	
BX 112 - BE 112 BN 112	**—**	211	32	
BX 132 - BE 132 BN 132 ... BN 160MR	**MX4 - ME4 M4**	254	32	
BX 160 - BE 160 BN 160M ... BN 180M	**MX5 - ME5 M5**	302	36	
BX 180 - BE 180 BN 180L ... BN 200L	**—**	340	36	
BX 200K	**—**	423	55	
BX 225K	**—**	465	55	
BX 250K	**—**	514	55	
BX 280K BY 280K	**—**	567	100	
BX 315K BY 315K	**—**	645	100	
BX 355K BY 355K	**—**	740	120	

M10.17 Textile canopy

TC

Option TC is a cover variant for textile industry environments, where lint may obstruct the fan grid and prevent a regular flow of cooling air.
This option is not compatible with variants EN1, EN2, EN3, EN4, EN5, EN6, PS, U1, U2.
Overall dimensions are the same as drip cover type RC.
TC option is not available for BX and BY motors.

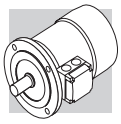

M10.18 Feedback units

Motors may be combined with six different types of encoders to achieve feedback circuits.
Configurations with double-extended shaft (PS) and rain canopy (RC, TC) are not compatible with encoder installation.

EN1 Incremental encoder, V_{IN} = 5 V, line-driver output RS 422.

EN2 Incremental encoder, V_{IN} = 10-30 V, line-driver output RS 422.

EN3 Incremental encoder, V_{IN} = 12-30 V, push-pull output 12-30 V

EN4 Encoder sin/cos, V_{IN} = 4.5-5.5 V, output Sinus 0.5VPP.

EN5 Absolute encoder singleturn, HIPERFACE® interface, V_{IN} = 7-12 V.

EN6 Absolute encoder multiturn, HIPERFACE® interface, V_{IN} = 7-12 V.

EN7 Incremental encoder Heavy Duty, V_{IN} = 12-30 V, push-pull output 12-30 V.

EN8 Incremental encoder Heavy Duty, V_{IN} = 12-30 V, push-pull output 9-30 V.

Note: EN7 and EN8 available only for BY ≥ 280K and BX ≥ 200K

(F60)

	EN1	EN2	EN3	EN4	EN5	EN6	EN7	EN8
Interface	TTL/RS 422	TTL/RS 422	HTL push-pull	Sinus 0.5 VPP	HIPERFACE®	HIPERFACE®	HTL push-pull	HTL push-pull
Power supply voltage [V]	4...6	10...30	12...30	4.4...5.5	7...12	7...12	9...30	
Output voltage [V]	5	5	12...30	—	—	—	9...30	
No-load operating current [mA]	120	100	100	40	80	80	80	
No. of pulses per revolution	1024							2048
Steps per revolution	—	—	—	—	15 bit	15 bit	-	-
Revolutions	—	—	—	—	—	12 bit	-	-
No. of signals	6 (A, B, Z + inverted signals)			6 (cos-, cos+, sin-, sin+, Z, $\overline{Z}$)	—	—	6	6
Max. output frequency [kHz]	600			200			200	
Max. speed [min^{-1}]	6000 (9000 min^{-1} for 10 s)						6000	
Temperature range [°C]	-30 ... +100						-20 ... +85	
Protection class	IP 65						IP67	

(F61)

EN1, EN2, EN3, EN4, EN5, EN6, EN7, EN8

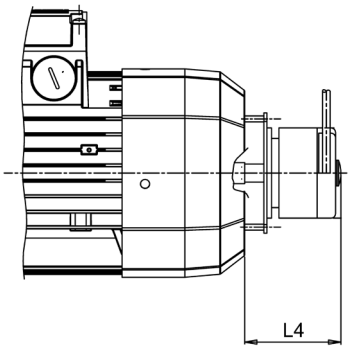

		L4
BN 63 … BN 200	**M05 ... M5**	65
BE 63… BE180	**ME05 ... ME5L**	65
BX 63 … BX 180	**MX05 ... MX5L**	65
BY 280K **BX 200K ... BX 280K**	**—**	100
BY 315K ... BY 355K **BX 315K ... BX 355K**	**—**	100

If the encoder variant (option EN_) is specified on motors along with the independent fan cooling (options U1, U2), the extra length of motor is coincident with the one present in catalogue chapter M12.15.

M10.19 Insulated Bearings

IB

When IB option is selected the motor is equipped with insulated bearings at drive end. This prevent early bearings failures due to high frequency circulation currents.
NOTE: This option is available only for BY...K ≥ 280 and BX...K ≥ 280, and it is mandatory when the motor is operated through a variable speed drive.

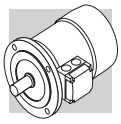

M10.20 Vertical Mounting

VM

NOTE: This option is mandatory for BY...K ≥ 280 and BX...K ≥ 200, when vertically mounted.
When VM is selected the motor is delivered with specific arrangements.
Furthermore, the vertical mounting position will also be reported on motor nameplate.

M10.21 Surface protection

C_

When no specific protection class is requested, the painted (ferrous) surfaces of motors are protected to at least corrosivity class C2 (UNI EN ISO 12944-2). For improved resistance to atmospheric corrosion, motors can be delivered with C3 and C4 surface protection.

(F62)

SURFACE PROTECTION	Typical environments	Maximum surface temperature	Corrosivity class according to UNI EN ISO 12944-2
C3	Urban and industrial environments with up to 100% relative humidity (medium air pollution)	120°C	C3
C4	Industrial areas, coastal areas, chemical plant, with up to 100% relative humidity (high air pollution)	120°C	C4
C5M	Coast and offshore areas with high salt content.	120°C	C5M

Motors with optional protection to class C3 or C4 are available in a choice of colours. If no specific colour is requested (see the “PAINTING” option) motors are finished in RAL 7042 for BN/M, BE/ME and BX≤180/MX and in Munsell blue 8B 4.5/3.25 for BX...K ≥ 200 and BY...K ≥ 280.
Motors can also be supplied with surface protection for corrosivity class C5 according to UNI EN ISO 12944-2. Contact our Technical Service for further details.

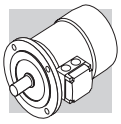

M10.22 Painting

RAL

Gearboxes with optional protection to class C3 or C4 are available in the colours listed in the following table.

(F63)

PAINTING	Colour	RAL number
RAL7042*	Traffic Grey A	7042
RAL5010	Gentian Blue	5010
RAL9005	Jet Black	9005
RAL9006	White Aluminium	9006
RAL9010	Pure White	9010
Munsell blue 8B* 4.5/3.25	Blue	MUNSELL 8B 4.5/3.25
RAL7035	Light Grey	7035
RAL7001	Silver Grey	7001
RAL5015	Sky Blue	5015
RAL7037	Dusty Grey	7037
RAL5024	Pastel Blue	5024

* BX...K ≥ 200 and BY...K ≥ 280 Motors are standardly supplied in this colour with C3 protection unless specified diffrently.

NOTE – “PAINTING” options can only be specified in conjunction with “SURFACE PROTECTION” options.

M10.23 Certificates

ACM

Certificate of compliance of motors
The document certifies the compliance of the product with the purchase order and the construction in conformity with the applicable procedures of the Bonfiglioli Quality System.

Note: Not available for BX...K≥200 and BY...K≥280

CC

Inspection certificate
The document entails checking on order compliance, the visual inspection of external conditions and instrumental testing of the electrical characteristics in unloaded conditions. Units inspected are sampled within the shipping batch and marked individually.

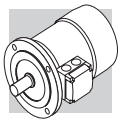

M11 TABLES OF MOTORS CORRELATION

M11.1 50 Hz Motors

(F65)

2 pole							
Efficiency class		IE1	IE2	IE3	IE1	IE2	IE3
Pn [kW]	0.06						
	0.09						
	0.12						
	0.18	BN 63A 2			M 05A 2		
	0.25	BN 63B 2			M 05B 2		
	0.37	BN 71A 2			M 05C 2		
	0.55	BN 71B 2			M 1SD 2		
	0.75	BN 71C 2	BE 80A 2		M 1LA 2	ME 2SA 2	
		BN 80A 2					
	1.1	BN 80B 2	BE 80B 2		M 2SA 2	ME 2SB 2	
	1.5	BN 90SA 2	BE 90SA 2		M 2SB 2		
	1.85	BN 90SB 2					
	2.2	BN 90L 2	BE 90L 2		M 3SA 2		
	3	BN 100L 2	BE 100L 2		M 3LA 2	ME 3LB 2	
	4	BN 112M 2	BE 112M 2		M 3LB 2		
	5.5	BN 132SA 2	BE 132SA 2		M 4SA 2	ME 4SA 2	
	7.5	BN 132SB 2	BE 132SB 2		M 4SB 2	ME 4LA 2	
	9.2	BN 132M 2	BE 132MB 2		M 4LA 2	ME 4LB 2	
	11	BN 160MR 2	BE 160MA 2		M 4LC 2	ME 5SA 2	
		BN 160M 2					
	15	BN 160MB 2	BE 160MB 2		M 5SB 2	ME 5SB 2	
	18.5	BN 160L 2	BE 160L 2		M 5SC 2	ME 5LA 2	
	22	BN 180M 2			M 5LA 2		
	30	BN 200LA 2					

(F64)

4 pole								
Efficiency class		IE1	IE2	IE3	IE4	IE1	IE2	IE3
Pn [kW]	0.06	BN 56A 4						
	0.09	BN 56B 4				M 0B 4		
	0.12	BN 63A 4	BE 63A 4	BX 63A 4		M 05A 4	ME 05A 4	MX 05A 4
	0.18	BN 63B 4	BE 63B 4	BX 63B 4		M 05B 4	ME 05B 4	MX 05B 4
	0.25	BN 63C 4		BX 63C 4		M 05C 4		BX 1SA 4
		BN 71A 4	BE 71A 4	BX 71A 4			ME 1SA 4	
	0.37	BN 71B 4	BE 71B 4	BX 71B 4		M 1SD 4	ME 1SB 4	BX 1SB 4
	0.55	BN 71C 4				M 1LA 4		BX 2SA 4
		BN 80A 4	BE 80A 4	BX 80A 4			ME 2SA 4	
	0.75	BN 80B 4	BE 80B 4	BX 80B 4		M 2SA 4	ME 2SB 4	MX 2SB 4
	1.1	BN 80C 4				M 2SB 4	ME 3SA 4	MX 3SA 4
		BN 90S 4	BE 90S 4	BX 90S 4				
	1.5	BN 90LA 4	BE 90LA 4	BX 90LA 4		M 3SA 4	ME 3SB 4	MX 3SB 4
	1.85	BN 90LB 4						
	2.2	BN 100LA 4	BE 100LA 4	BX 100LA 4		M 3LA 4	ME 3LA 4	MX 3LA 4
	3	BN 100LB 4	BE 100LB 4	BX 100LB 4		M 3LB 4	ME 3LB 4	MX 3LB 4
	4	BN 112M 4	BE 112M 4	BX 112M 4		M 3LC 4	ME 4SA 4	MX 4SA 4
	5.5	BN 132S 4	BE 132S 4	BX 132SB 4		M 4SA 4	ME 4SB 4	MX 4SB 4
	7.5	BN 132MA 4	BE 132MA 4	BX 132MA 4		M 4LA 4	ME 4LA 4	MX 4LA 4
	9.2	BN 132MB 4	BE 132MB 4	BX 160MA 4		M 4LB 4	ME 4LB 4	MX 5SA 4
	11	BN 160MR 4	BE 160M 4	BX 160MB 4		M 4LC 4	ME 5SA 4	MX 5SB 4
		BN 160M 4						
	15	BN 160L 4	BE 160L 4	BX 160L 4		M 5SB 4	ME 5LA 4	MX 5LA 4
	18.5	BN 180M 4	BE 180M 4	BX 180M 4		M 5LA 4		
	22	BN 180L 4	BE 180L 4	BX 180L 4				
	30	BN 200L 4		BX 200LAK 4				
	37			BX 225SAK 4				
	45			BX 225SBK 4				
	55			BX 250MAK 4				
	75			BX 280SAK 4	BY 280SCK 4			
	90			BX 280SBK 4	BY 280MAK 4			
	110			BX 315SAK 4	BY 315SCK 4			
	132			BX 315SBK 4	BY 315SDK 4			
	160			BX 315SCK 4	BY 315MBK 4			
	200			BX 355SAK 4	BY 355SAK 4			
	250			BX 355MAK 4				
	315			BX 355MBK 4				
	355			BX 355MCK 4				

(F66)

6 pole							
							
Efficiency class		IE1	IE2	IE3	IE1	IE2	IE3
Pn [kW]	0.06						
	0.09	BN 63A 6			M 05A 6		
	0.12	BN 63B 6			M 05B 6		
	0.18	BN 71A 6			M 1SC 6		
	0.25	BN 71B 6			M 1SD 6		
		BN 71C 6					
	0.37	BN 80A 6			M 1LA 6		
	0.55	BN 80B 6			M 2SA 6		
	0.75	BN 80C 6	BE 90S 6		M 2SB 6		
		BN 90S 6					
	1.1	BN 90L 6	BE 100M 6		M 3SA 6	ME 3LA 6	
	1.5	BN 100LA 6	BE 100LA 6		M 3LA 6	ME 3LB 6	
	1.85	BN 100LB 6			M 3LB 6		
	2.2	BN 112M 6	BE 112M 6		M 3LC 6		
	3	BN 132S 6	BE 132S 6		M 4SA 6	ME 4SB 6	
	4	BN 132MA 6	BE 132MA 6		M 4LA 6	ME 4LA 6	
	5.5	BN 132MB 6	BE 160MA 6		M 4LB 6	ME 5SA 6	
	7.5	BN 160M 6	BE 160MB 6		M 5SA 6	ME 5SB 6	
	9.2						
	11	BN 160L 6			M 5SB 6		
	15	BN 180L 6					
	18.5	BN 200LA 6					
	22						
	30						

M11.2 60 Hz Motors

(F67)

2 pole							
							
Efficiency class		IE1	IE2	IE3	IE1	IE2	IE3
Pn [kW]	0.06						
	0.09						
	0.12						
	0.18	BN 63A 2			M 05A 2		
	0.25	BN 63B 2			M 05B 2		
	0.37	BN 71A 2			M 05C 2		
	0.55	BN 71B 2			M 1SD 2		
	0.75	BN 71C 2			M 1LA 2		
		BN 80A 2					
	1.1	BN 80B 2			M 2SA 2		
	1.5	BN 90SA 2			M 2SB 2		
	1.85	BN 90SB 2					
	2.2	BN 90L 2			M 3SA 2		
	3	BN 100L 2			M 3LA 2		
	3.7	BN 112M 2			M 3LB 2		
	5.5	BN 132SA 2			M 4SA 2		
	7.5	BN 132SB 2			M 4SB 2		
	9.2	BN 132M 2			M 4LA 2		
	11	BN 160MR 2			M 4LC 2		
		BN 160M 2					
	15	BN 160MB 2			M 5SB 2		
	18.5	BN 160L 2			M 5SC 2		
	22	BN 180M 2			M 5LA 2		
	30	BN 200LA 2					

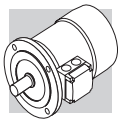

(F68)

4 pole								
Efficiency class		IE1	IE2	IE3	IE4	IE1	IE2	IE3
Pn [kW]	0.06	BN 56A 4						
	0.09	BN 56B 4				M 0B 4		
	0.12	BN 63A 4	BE 63A 4			M 05A 4		
	0.18	BN 63B 4	BE 63B 4			M 05B 4		
	0.25	BN 63C 4				M 05C 4		
		BN 71A 4	BE 71A 4					
	0.37	BN 71B 4	BE 71B 4			M 1SD 4		
	0.55	BN 71C 4				M 1LA 4		
		BN 80A 4	BE 80A 4					
	0.75	BN 80B 4	BE 80B 4	BX 90SR 4		M 2SA 4	ME 2SB 4	MX 2SB 4
	1.1	BN 80C 4	BE 90S 4	BX 90S 4		M 2SB 4	ME 3SA 4	MX 3SA 4
		BN 90S 4						
	1.5	BN 90LA 4	BE 90LA 4	BX 90LA 4		M 3SA 4	ME 3SB 4	MX 3SB 4
	1.85	BN 90LB 4						
	2.2	BN 100LA 4	BE 100LA 4	BX 100LA 4		M 3LA 4	ME 3LA 4	MX 3LA 4
	3	BN 100LB 4	BE 100LB 4	BX 100LB 4		M 3LB 4	ME 3LB 4	MX 3LB 4
	3.7	BN 112M 4	BE 112M 4	BX 112M 4		M 3LC 4	ME 4SA 4	MX 4SA 4
	5.5	BN 132S 4	BE 132S 4	BX 132SB 4		M 4SA 4	ME 4SB 4	MX 4SB 4
	7.5	BN 132MA 4	BE 132MA 4	BX 132MA 4		M 4LA 4	ME 4LA 4	MX 4LA 4
	9.2	BN 132MB 4	BE 132MB 4	BX 160MA 4		M 4LB 4	ME 4LB 4	MX 5SA 4
	11	BN 160MR 4	BE 160M 4	BX 160MB 4		M 4LC 4	ME 5SA 4	MX 5SB 4
		BN 160M 4						
	15	BN 160L 4	BE 160L 4	BX 160L 4		M 5SB 4	ME 5LA 4	MX 5LA 4
	18.5	BN 180M 4	BE 180M 4	BX 180M 4		M 5LA 4		
	22	BN 180L 4	BE 180L 4	BX 180L 4				
	30	BN 200L 4		BX 200LAK 4				
	37			BX 225SAK 4				
	45			BX 225SBK 4				
	55			BX 280SAK 4				
	75			BX 280SBK 4				
	90			BX 315SAK 4				
	110			BX 315SBK 4				
	132			BX 315SCK 4				
	160			BX 355SAK 4				
	200			BX 355SBK 4				
	250			BX 355SCK 4				
	315			BX 355MBK 4				
	355			BX 355MCK 4				

(F69)

6 pole							
Efficiency class		IE1	IE2	IE3	IE1	IE2	IE3
Pn [kW]	0.06						
	0.09	BN 63A 6			M 05A 6		
	0.12	BN 63B 6			M 05B 6		
	0.18	BN 71A 6			M 1SC 6		
	0.25	BN 71B 6			M 1SD 6		
		BN 71C 6					
	0.37	BN 80A 6			M 1LA 6		
	0.55	BN 80B 6			M 2SA 6		
	0.75	BN 80C 6			M 2SB 6		
		BN 90S 6					
	1.1	BN 90L 6			M 3SA 6		
	1.5	BN 100LA 6			M 3LA 6		
	1.85	BN 100LB 6			M 3LB 6		
	2.2	BN 112M 6			M 3LC 6		
	3	BN 132S 6			M 4SA 6		
	3.7	BN 132MA 6			M 4LA 6		
	5.5	BN 132MB 6			M 4LB 6		
	7.5	BN 160M 6			M 5SA 6		
	9.2						
	11	BN 160L 6			M 5SB 6		
	15	BN 180L 6					
	18.5	BN 200LA 6					
	22						
	30						

4 P	1500 min^{-1} - S1	50 Hz

P_n			n	M_n		In 400V	η%			cos φ	I_s/I_n	M_s/M_n	M_a/M_n	KVA code	J_m x 10^{-4}		IM B5		d.c. brake FD Mod	M_b		J_m x 10^{-4}		IM B5		Standard CE
kW	hp		min^{-1}	Nm	lb·in	A	100%	75%	50%						kgm^2	lb·ft^2	Kg	lbs		Nm	lb·in	kgm^2	lb·ft^2	Kg	lbs	
75	101	**BY 280SCK 4**	1487	481	4257	130	96.0	96.4	96.1	0.86	7.8	2.8	2.9	N/A	1.90	0.0045	725	1598	**FD 100**	1000	8850	1.89	0.0045	831	1832	•
90	121	**BY 280MAK 4**	1489	577	5106	165	96.1	96.1	95.1	0.82	8.9	2.8	3.2	N/A	2.30	0.0055	840	1852	**FD 100**	1000	8850	2.35	0.0056	946	2086	•
110	148	**BY 315SCK 4**	1491	704	6230	194	96.3	96.5	96.1	0.85	7.8	2.4	3.1	N/A	2.90	0.0069	1000	2205	**FD 100**	1000	8850	2.94	0.0070	1106	2438	•
132	177	**BY 315SDK 4**	1490	846	7487	238	96.4	96.4	95.4	0.83	8.9	2.6	3.1	N/A	3.20	0.0076	1065	2348	**FD 160**	1600	14160	3.25	0.0077	1233	2718	•
160	215	**BY 315MBK 4**	1490	1028	9098	278	96.6	96.8	96.4	0.86	8.1	2.8	3.0	N/A	3.90	0.0093	1220	2690	**FD 160**	1600	14160	3.95	0.0094	1388	3060	•
200	268	**BY 355SAK 4**	1491	1281	11337	345	96.7	96.7	96.2	0.87	7.3	2.4	2.7	N/A	5.90	0.0140	1610	3549	**FD 250**	2500	22125	5.95	0.0141	1778	3920	•

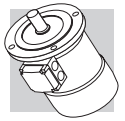

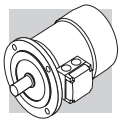

M13 MOTORS DIMENSIONS BY

BY - IM B3

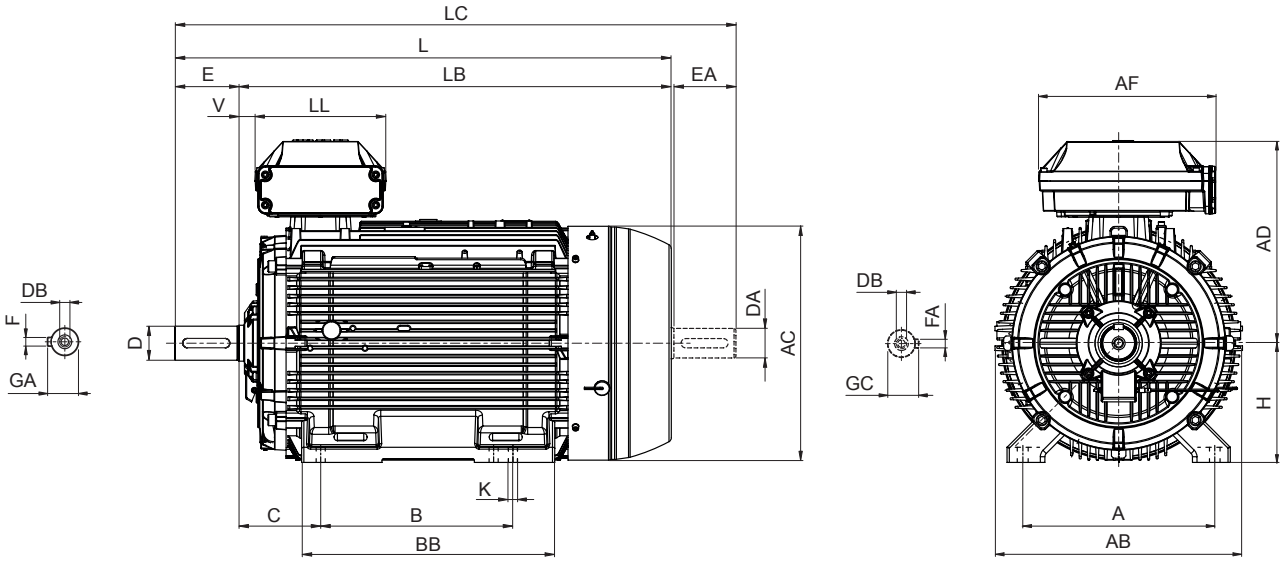

	Shaft					Housing						Motor									
	D DA	E EA	DB	GA GC	F FA	B	A	HA	BB	AB	K	C	H	AC	L	LB	LC	AD	AF	LL	V
BY 280SCK	75 65(1)	140 140(1)	M20 M20(1)	79.5 69(1)	20 18(1)	368	457	31	506	530	24	190	280	564	1088	948	1238	482	434	306	43
BY 280MAK						419			608						1190	1050	1340	505	473	347	23
BY 315SCK	80 75(1)	170 140(1)		85 79.5(1)	22 20(1)	406	508	40	558	590	28	216	315	639	1202	1032	1352	537			42
BY 315SDK																					
BY 315MBK	90 75(1)		M24 M20(1)	95 79.5(1)	25 20(1)	457			669						1313	1143	1463				
BY 355SAK	100 75(1)	210 170(1)		106 79.5(1)	28 20(1)	500	610	45	722	700	35	254	355	740	1479	1269	1659	603	694	413	50

N.B.: 1) These values refer to the rear shaft end (PS).

BY - IM B5

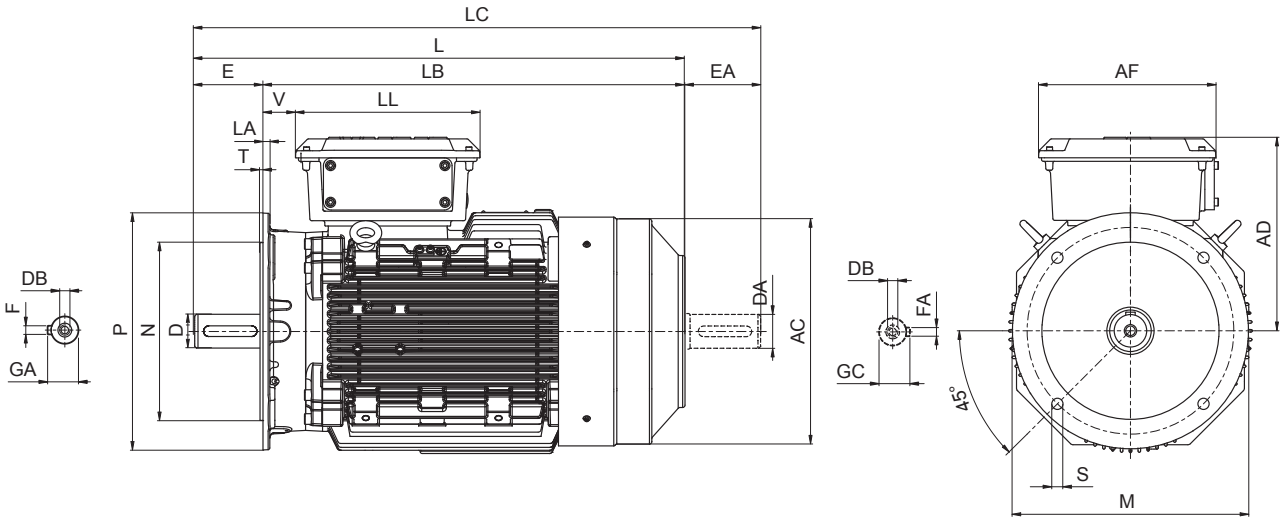

	Shaft					Flange						Motor							
	D DA	**E EA**	**DB**	**GA GC**	**F FA**	**M**	**N**	**P**	**S**	**T**	**LA**	**AC**	**L**	**LB**	**LC**	**AD**	**AF**	**LL**	**V**
BY 280SCK	75 65(1)	140 140(1)	M20 M20(1)	79.5 69 (1)	20 18(1)	500	450	550	18	5	23	567	1086	946	1236	482	434	306	43
BY 280MAK													1190	1050	1340	505	473	347	42
BY 315SCK	80 75(1)	170 140(1)	M20 M20(1)	85 79.5(1)	22 20(1)	600	550	660	23	6	25	645	1202	1032	1350	537			
BY 315SDK																			
BY 315MBK													1313	1143	1451				
BY 355SAK	100 75(1)	210 170(1)	M24 M20(1)	106 79.5(1)	28 20(1)	740	680	800				740	1479	1269	1651	603	694	413	50

N.B.: 1) These values refer to the rear shaft end (PS).

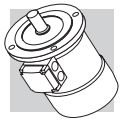

4 P	1500 min^{-1} - S1	50 Hz

P_n			n	M_n		In 400V	η%			cos φ	I_s/I_n	M_s/M_n	M_a/M_n	KVA code	J_m x 10^{-4}		IM B5		d.c. brake FD Mod	M_b		Z_o 1/h		J_m x 10^{-4}		IM B5		CE	CE + BIS	CE + CEL
kW	hp		min^{-1}	Nm	lb·in	A	100%	75%	50%						kgm^2	lb·ft^2	Kg	lbs		Nm	lb·in	NB	SP	kgm^2	lb·ft^2	Kg	lbs			
0.12	0.16	**BX 63A 4**	1365	0.8	7.4	0.45	64.8	60	52.9	0.64	2.9	2.4	1.7	G	1.8	0.0043	3.2	7	**FD 02**	1.75	15	8900	11000	2.4	0.0057	4.9	11	•	•	
0.18	0.25	**BX 63B 4**	1370	1.3	11.1	0.57	69.9	69.5	65.9	0.63	3.6	2.6	1.8	G	2.9	0.0069	5.1	11	**FD 02**	3.5	31	7000	9000	3.5	0.0083	6.8	12	•	•	
0.25	0.33	**BX 63C 4**	1390	1.7	15.5	0.78	73.5	71.0	65.6	0.64	3.9	3.0	2.5	H	4.3	0.0102	5.4	12	**FD 02**	3.5	31	7800	10000	4.9	0.0116	7.0	16	•	•	
0.25	0.33	**BX 71A 4**	1400	1.7	15.5	0.63	73.5	76.0	72.6	0.77	4.3	2.3	2.3	G	6.3	0.0150	5.7	13	**FD 03**	3.5	31	5400	7800	8.4	0.0190	8.4	19	•	•	
0.37	0.55	**BX71B 4**	1420	2.5	22.0	1.0	77.3	78.1	73.8	0.71	5.9	3.4	3.1	J	10	0.0230	7.3	16	**FD 03**	5	44	7000	10000	11.8	0.0280	10	22	•	•	
0.55	0.75	**BX 80A 4**	1425	3.7	33	1.2	80.8	78.6	75.2	0.81	6.8	3.5	2.7	J	28	0.0664	12.2	26.9	**FD 04**	15	133	2400	4700	29.6	0.0702	16	36	•	•	
0.75	1	**BX 80B 4**	1425	5.0	44.5	1.61	82.5	83.9	83.2	0.81	6.5	2.0	1.8	J	35	0.0831	16	35	**FD 04**	15	133	1700	3300	37	0.0878	20	44	•	•	
1.1	1.5	**BX 90S 4**	1425	7.4	65.2	2.44	84.1	84.1	82.0	0.77	6.9	3.4	2.2	J	27	0.0641	16	35	**FD 14**	15	133	3700	6200	29	0.0688	20	44	•	•	
1.5	2	**BX 90LA 4**	1420	10.1	89.3	3.3	85.3	86.2	84.9	0.78	6.3	3.1	1.9	J	31	0.0736	17	37	**FD 05**	26	230	2400	4300	35	0.0831	23	51	•	•	
2.2	3	**BX 100LA 4**	1445	14.5	129	5.1	86.7	86.2	84.0	0.72	7.2	3.6	2.4	K	58	0.1376	24	53	**FD 15**	40	354	1500	2800	62	0.1471	31	68	•	•	•
3	4	**BX 100LB 4**	1445	19.8	175	6.7	87.7	87.7	86.0	0.74	7.6	3.9	2.6	K	73	0.1732	29	64	**FD 15**	40	354	1500	2700	77	0.1827	36	79	•	•	•
3.7	5	**BX 112M 4**	1450	24.4	216	7.6	88.4	89.7	87.7	0.79	8.6	4.0	2.5	L	130	0.3085	38	84	**FD 06S**	60	531	—	1100	139	0.3299	48	106		•	
4	5.4	**BX 112M 4**	1445	26.0	234	8.1	88.6	88.9	87.6	0.80	8.1	3.8	2.5	J	130	0.3085	38	84	**FD 06S**	60	531	—	1100	139	0.3299	48	106	•		•
5.5	7.5	**BX 132SB 4**	1460	36.0	318	10.6	89.6	89.2	88.8	0.83	8.2	3.6	2.3	J	310	0.7356	57	126	**FD 56**	75	664	—	700	320	0.7594	70	154	•	•	•
7.5	10	**BX 132MA 4**	1460	49.0	434	15.0	90.4	90.9	90.2	0.80	8.4	3.8	2.5	K	360	0.8543	67	148	**FD 06**	100	885	—	700	370	0.8780	80	176	•	•	•
9.2	12.5	**BX 160MA 4**	1465	60.0	531	17.8	91.0	92.1	91.7	0.82	7.9	3.6	2.1	J	650	1.5425	95	209	**FD 08**	170	1505	—	620	725	1.7205	125	276	•		•
11	15	**BX 160MB 4**	1465	71.7	635	20.5	91.4	92.9	92.5	0.84	7.8	3.4	1.9	J	780	1.8509	110	243	**FD 08**	170	1505	—	470	855	2.0289	140	309	•		•
15	20	**BX 160L 4**	1465	98.0	865	28.1	92.1	93.2	92.6	0.82	9.0	4.1	2.3	K	890	2.1120	121	267	**FD 08**	200	1770	—	510	965	2.2900	151	333	•		•
18.5	25	**BX 180M 4**	1480	119	1056	32.9	92.6	94.1	93.1	0.85	11.3	2.6	2.3	M	1560	3.7019	155	342	**FD 09**	300	2655	—	440	1760	4.1765	195	430	•		•
22	30	**BX 180L 4**	1475	142	1261	38.2	93.0	93.6	92.8	0.88	10.2	2.5	2.0	L	1660	3.9392	163	359	**FD 09**	300	2655	—	250	1860	4.4138	203	448	•		•

Note: for more details on the available energy certifications look at the catalog's dedicated section.

4 P	1500 min^{-1} - S1	50 Hz

																			d.c. brake FD						Standard	BIS variant	CEL variant
P_n			n	M_n		In 400V	η%			cos φ	$\frac{I_s}{I_n}$	$\frac{M_s}{M_n}$	$\frac{M_a}{M_n}$	KVA code	J_m x 10^{-4}		IM B5		Mod	M_b		J_m x 10^{-4}		IM B5		CE	CE + BIS	CE + CEL
kW	hp		min^{-1}	Nm	lb·in	A	100%	75%	50%						kgm^2	lb·ft^2	Kg	lbs		Nm	lb·in	kgm^2	lb·ft^2	Kg	lbs			
30	40	**BX 200LAK 4**	1483	193	1708	55.7	94.7	95.1	95.0	0.82	8.3	3.0	3.3	N/A	0.37	0.0009	319	703	**FD 8**	400	3540	0.39	0.0009	337	743	•	•	•
37	50	**BX 225SAK 4**	1482	238	2106	65.9	95.1	95.5	95.4	0.85	7.7	2.8	3.1	N/A	0.54	0.0013	398	877	**FD 9**	600	5310	0.57	0.0014	426	939	•	•	•
45	60	**BX 225SBK 4**	1481	290	2567	80.4	95.2	95.6	95.6	0.85	7.9	2.8	3.2	N/A	0.54	0.0013	398	877	**FD 9**	600	5310	0.57	0.0014	426	939	•	•	•
55	74	**BX 250MAK 4**	1485	354	3133	98.9	95.6	95.8	95.5	0.84	7.9	3.0	3.3	N/A	0.93	0.0022	476	1049	**FD10**	800	7080	1.01	0.0024	521	1149	•	•	•
75	101	**BX 280SAK 4**	1487	482	4266	134.0	95.9	96.2	96.1	0.84	7.3	2.5	2.8	N/A	1.50	0.0036	665	1466	**FD 100**	1000	8850	1.54	0.0036	771	1700	•	•	•
90	121	**BX 280SBK 4**	1487	578	5115	161.0	96.2	96.4	96.1	0.84	7.9	2.9	3.0	N/A	1.85	0.0044	725	1598	**FD 100**	1000	8850	1.89	0.0045	831	1832	•	•	•
110	148	**BX 315SAK 4**	1491	704	6230	194.0	96.8	97.0	96.7	0.84	8.3	2.4	3.1	N/A	2.90	0.0069	1000	2205	**FD 100**	1000	8850	2.94	0.0070	1106	2438	•	•	•
132	177	**BX 315SBK 4**	1490	846	7487	234.0	96.9	97.1	96.8	0.84	8.1	2.6	3.2	N/A	3.20	0.0076	1065	2348	**FD 160**	1600	14160	3.25	0.0077	1233	2718	•	•	•
160	215	**BX 315SCK 4**	1490	1025	9071	279.0	96.7	96.9	96.6	0.86	8.2	2.7	3.0	N/A	3.90	0.0093	1220	2690	**FD 160**	1600	14160	3.95	0.0094	1388	3060	•	•	•
200	268	**BX 355SAK 4**	1491	1281	11337	345.0	96.6	96.7	96.4	0.87	7.3	2.1	2.7	N/A	5.90	0.0140	1610	3549	**FD 250**	2500	22125	5.95	0.0141	1778	3920	•	•	•
250	335	**BX 355MAK 4**	1491	1601	14169	435.0	96.0	96.0	95.6	0.86	6.4	2.1	2.9	N/A	6.90	0.0164	1780	3924	**FD 250**	2500	22125	6.95	0.0165	1948	4295	•	•	•
315	422	**BX 355MBK 4**	1491	2017	17850	550.0	96.0	96.1	95.7	0.85	7.3	2.4	3.3	N/A	7.20	0.0171	1820	4012	**FD 250**	2500	22125	7.25	0.0172	1988	4383	•	•	•
355	476	**BX 355MCK 4**	1490	2275	20134	616.0	96.0	96.2	95.8	0.86	6.3	2.3	2.8	N/A	8.40	0.0199	2140	4718	**FD 250**	2500	22125	8.45	0.0201	2308	5088	•	•	•

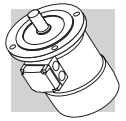

Note: for more details on the available energy certifications look at the catalog's dedicated section.

4 P	1800 min^{-1} - S1	60 Hz

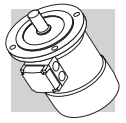

																		d.c. brake FD									Standard	CUS variant
P_n			n	M_n		In 460V	η%			cos φ	$\frac{I_s}{I_n}$	$\frac{M_s}{M_n}$	$\frac{M_a}{M_n}$	KVA code	J_m x 10^{-4}		IM B5		Mod	M_b		Z_o 1/h		J_m x 10^{-4}		IM B5		CE	CE + UL
kW	hp		min^{-1}	Nm	lb·in	A	100%	75%	50%						kgm^2	lb·ft^2	Kg	lbs		Nm	lb·in	NB	SB	kgm^2	lb·ft^2	Kg	lbs		
0.12	0.16	**BX 63A 4**	1700	0.7	5.9	0.49	66.0	63.1	56.0	0.50	4.1	3.8	2.7	L	1.82	0.004321032	3.2	7.0	**FD 02**	1.75	15	8900	11000	2.4	0.0057	4.9	11	•	
0.18	0.25	**BX 63B 4**	1695	1.0	9.0	0.52	69.5	69.5	67.9	0.57	4.3	3.2	3.0	J	2.9	0.0069	5.1	11	**FD 02**	3.5	31	7000	9000	3.5	0.0083	6.8	12	•	
0.25	0.33	**BX 63C 4**	1710	1.4	12.4	0.71	73.4	73.6	67.7	0.58	4.8	3.8	3.1	K	4.3	0.0102	5.4	12	**FD 02**	3.5	31	5800	7700	4.9	0.0116	7.0	16	•	
0.25	0.33	**BX 71A 4**	1715	1.4	12.4	0.55	73.4	76.1	71.5	0.71	5.2	2.8	2.1	G	6.3	0.0150	5.5	13	**FD 03**	3.5	31	5700	8100	8.4	0.0190	8.4	19	•	
0.37	0.55	**BX 71B 4**	1735	2.0	17.7	0.9	78.2	79.2	75.1	0.66	6.9	4.1	3.7	M	10	0.0230	7.3	16	**FD 03**	5	44	4800	6800	11.8	0.0280	10	22	•	
0.55	0.75	**BX 80A 4**	1730	3.0	26.5	1.11	81.1	78.3	74	0.78	7.7	4.3	3.4	L	28	0.0664	12.2	26.9	**FD 04**	15	133	2000	3900	29.6	0.0702	16	36	•	
0.75	1	**BX 80B 4**	1740	4.1	36	1.43	85.5	85.8	84.2	0.78	7.3	2.4	2.2	L	35	0.0831	16	35	**FD 04**	15	133	1400	2800	37	0.0878	20	44	•	
0.75	1	**BX 90SR 4**	1755	4.1	36	1.48	85.5	86.4	83.9	0.73	8.0	3.7	2.5	L	27	0.0641	16	35	**FD 14**	15	133	1800	3700	29	0.0688	20	44	•	•
1.1	1.5	**BX 90S 4**	1740	6.0	53	2.15	86.5	85.9	83.0	0.74	8.2	4.1	2.8	K	27	0.0641	16	35	**FD 14**	15	133	2400	5500	29	0.0688	20	44	•	•
1.5	2	**BX 90LA 4**	1735	8.3	73	2.91	86.5	86.5	84.4	0.75	7.4	3.6	2.5	K	31	0.0736	17	37	**FD 05**	26	230	1700	3600	35	0.0831	23	51	•	•
2.2	3	**BX 100LA 4**	1760	11.9	106	4.4	89.5	88.6	86.2	0.71	9.9	4.8	3.6	N	73	0.1732	29	64	**FD 15**	40	354	470	1300	77	0.1827	36	79	•	•
3	4	**BX 100LB 4**	1750	16.4	145	5.9	89.5	88.9	86.7	0.71	9.1	4.4	3.3	M	73	0.1732	29	64	**FD 15**	40	354	640	1700	77	0.1827	36	79	•	•
3.7	5	**BX 112M 4**	1760	20.0	178	6.7	89.5	89.5	89.1	0.77	10.4	4.7	3.4	M	130	0.3085	38	84	**FD 06S**	60	531	—	790	139	0.3299	48	106	•	•
5.5	7.5	**BX 132SB 4**	1770	30.0	263	9.9	91.7	92.0	90.2	0.76	10.7	5.1	4.6	N	410	0.9729	77	170	**FD 56**	75	664	—	130	420	0.9967	90	198	•	•
7.5	10	**BX 132MA 4**	1770	41.0	358	13.4	91.7	91.3	89.7	0.76	11.0	4.9	4.4	N	410	0.9729	77	170	**FD 06**	100	885	—	230	420	0.9967	90	198	•	•
9.2	12.5	**BX 160MA 4**	1770	50.0	439	15.6	92.4	92.5	91.6	0.80	9.1	4.1	2.6	L	650	1.5425	95	209	**FD 08**	170	1505	—	280	725	1.7205	125	276	•	•
11	15	**BX 160MB 4**	1770	59.0	525	18.2	92.4	92.9	92.0	0.82	9.3	4.0	2.4	L	780	1.8509	110	243	**FD 08**	170	1505	—	230	855	2.0289	140	309	•	•
15	20	**BX 160L 4**	1770	81.0	716	24.5	93.0	93.5	92.5	0.81	10.9	4.8	2.8	M	890	2.1120	121	267	**FD 08**	200	1770	—	240	965	2.2900	151	333	•	•
18.5	25	**BX 180M 4**	1780	99.0	878	28.6	93.6	94.5	93.2	0.85	13.0	2.9	2.7	N	1560	3.7019	155	342	**FD 09**	300	2655	—	130	1760	4.1765	195	430	•	•
22	30	**BX 180L 4**	1775	118.0	1045	33.1	93.6	94.2	93.1	0.87	11.5	2.8	2.4	M	1660	3.9392	163	359	**FD 09**	300	2655	—	130	1860	4.4138	203	448	•	•

Note: for more details on the available energy certifications look at the catalog's dedicated section.
Sizes 100LA and 100LB are only available with UL for USA and not for Canada

4 P	1800 min^{-1} - S1	60 Hz

																			d.c. brake FD							CUS variant	NBR variant
P_n			n	M_n		In 400V	η%			cos φ	I_s/I_n	M_s/M_n	M_a/M_n	KVA code	J_m x 10^{-4}		IM B5		Mod	M_b		J_m x 10^{-4}		IM B5		CE + UL	CE + INMETRO
kW	hp		min^{-1}	Nm	lb·in	A	100%	75%	50%						kgm^2	$lb·ft^2$	Kg	lbs		Nm	lb·in	kgm^2	$lb·ft^2$	Kg	lbs		
30	40	**BX 200LAK 4**	1786	160	1416	47.9	94.7	94.8	94.1	0.83	9.4	3.3	3.7	N/A	0.37	0.0009	319	703	**FD 8**	400	3540	0.39	0.0009	337	743	•	•
37	50	**BX 225SAK 4**	1784	198	1752	57.3	95.3	95.5	94.9	0.85	8.8	2.9	3.4	N/A	0.54	0.0013	398	877	**FD 9**	600	5310	0.57	0.0014	426	939	•	•
45	60	**BX 225SBK 4**	1785	240	2124	70.5	95.3	95.4	94.8	0.84	8.9	3.0	3.6	N/A	0.54	0.0013	398	877	**FD 9**	600	5310	0.57	0.0014	426	939	•	•
55	74	**BX 250MAK 4**	1787	293	2593	85.8	95.7	95.8	95.2	0.84	9.1	3.3	3.7	N/A	0.93	0.0022	476	1049	**FD10**	800	7080	1.01	0.0024	521	1149	•	•
75	101	**BX 280SAK 4**	1788	401	3549	117.0	95.9	95.7	94.7	0.84	8.4	2.7	3.1	N/A	1.50	0.0036	665	1466	**FD 100**	1000	8850	1.54	0.0036	771	1700	•	•
90	121	**BX 280SBK 4**	1788	481	4257	140.0	96.1	95.9	95.0	0.84	9.0	3.1	3.3	N/A	1.85	0.0044	725	1598	**FD 100**	1000	8850	1.89	0.0045	831	1832	•	•
110	148	**BX 315SAK 4**	1792	586	5186	172.0	96.1	96.0	95.3	0.84	8.8	2.6	3.4	N/A	2.90	0.0069	1000	2205	**FD 100**	1000	8850	2.94	0.0070	1106	2438	•	•
132	177	**BX 315SBK 4**	1791	704	6230	206.0	96.4	96.3	95.6	0.84	9.0	2.8	3.6	N/A	3.20	0.0076	1065	2348	**FD 160**	1600	14160	3.25	0.0077	1233	2718	•	•
160	215	**BX 315SCK 4**	1791	853	7549	241.0	96.4	96.4	95.9	0.86	9.0	2.9	3.3	N/A	3.90	0.0093	1220	2690	**FD 160**	1600	14160	3.95	0.0094	1388	3060	•	•
200	268	**BX 355SAK 4**	1792	1065	9425	301.0	96.4	96.2	95.4	0.87	8.3	2.2	3.0	N/A	5.90	0.0140	1610	3549	**FD 250**	2500	22125	5.95	0.0141	1778	3920	•	•
250	335	**BX 355MAK 4**	1792	1332	11788	381.0	96.7	96.6	96.0	0.86	8.8	2.7	3.2	N/A	6.90	0.0164	1780	3924	**FD 250**	2500	22125	6.95	0.0165	1948	4295	•	•
315	422	**BX 355MBK 4**	1791	1679	14859	479.0	96.7	96.6	96.1	0.85	8.5	3.1	3.2	N/A	7.20	0.0171	1820	4012	**FD 250**	2500	22125	7.25	0.0172	1988	4383	•	•
355	476	**BX 355MCK 4**	1792	1893	16753	541.0	96.7	96.5	96.9	0.86	7.2	2.4	3.1	N/A	8.40	0.0199	2140	4718	**FD 250**	2500	22125	8.45	0.0201	2308	5088	•	•

Note: for more details on the available energy certifications look at the catalog's dedicated section.

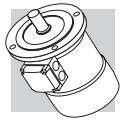

4 P	1500 min^{-1} - S1	50 Hz

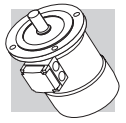

																			d.c. brake FD											
P_n			n	M_n		In 400V	η%			cos φ	$\frac{I_s}{I_n}$	$\frac{M_s}{M_n}$	$\frac{M_a}{M_n}$	KVA code	J_m x 10^{-4}		IM B5		Mod	M_b		Z_o 1/h		J_m x 10^{-4}		IM B5		CE	CE + BIS	CE + CEL
kW	hp		min^{-1}	Nm	lb·in	A	100%	75%	50%						kgm^2	lb·ft^2	Kg	lbs		Nm	lb·in	NB	SB	kgm^2	lb·ft^2	Kg	lbs			
0.12	0.16	**MX 05A 4**	1365	0.8	7.4	0.45	64.8	60	52.9	0.64	2.9	2.4	1.7	G	1.8	0.0043	3.2	7	**FD 02**	1.75	15	8900	11000	2.4	0.0057	4.9	11	•	•	
0.18	0.25	**MX 05B 4**	1370	1.3	11.1	0.57	69.9	69.5	65.9	0.63	3.6	2.6	1.8	G	2.9	0.0069	5.1	11	**FD 02**	3.5	31	7000	9000	3.5	0.0083	6.8	15	•	•	
0.25	0.33	**MX 1SA 4**	1400	1.7	15.5	0.63	73.5	76.0	72.6	0.77	4.3	2.3	2.3	G	6.3	0.0150	5.4	12	**FD 03**	3.5	31	5400	7800	8.4	0.0190	8.1	18	•	•	
0.37	0.5	**MX 1SB 4**	1420	2.5	22.0	1.0	77.3	78.1	73.8	0.71	5.9	3.4	3.1	J	10	0.0230	6.9	15	**FD 03**	5	44	7000	10000	11.8	0.0280	10	22	•	•	
0.55	0.75	**MX 2SA 4**	1425	3.7	33	1.2	80.8	78.6	75.2	0.81	6.8	3.5	2.7	J	28	0.0664	12.2	27	**FD 04**	15	133	2400	4700	29.6	0.0702	16	36	•	•	
0.75	1	**MX 2SB 4**	1425	5.0	45	1.61	82.5	83.9	83.2	0.81	6.5	2.0	1.8	J	35	0.0831	16	35	**FD 04**	15	132	1700	3300	37	0.0878	20	44	•	•	
1.1	1.5	**MX 3SA 4**	1445	7.3	64	2.46	84.1	85.5	83.5	0.75	6.7	3.0	2.0	J	35	0.0831	17	37	**FD 15**	26	132	3700	6200	39	0.0925	24	53	•	•	
1.5	2	**MX 3SB 4**	1445	9.9	88	3.3	85.3	86.8	85.4	0.75	6.7	3.1	2.0	J	43	0.1020	20	44	**FD 15**	26	230	2400	4300	47	0.1115	27	60	•	•	•
2.2	3	**MX 3LA 4**	1445	14.5	129	5.1	86.7	86.2	84.0	0.72	7.2	3.6	2.4	K	58	0.1376	24	53	**FD 15**	40	354	1500	2800	62	0.1471	31	68	•	•	•
3	4	**MX 3LB 4**	1445	19.8	175	6.7	87.7	87.7	86.0	0.74	7.6	3.9	2.6	K	73	0.1732	29	64	**FD 15**	40	354	1500	2700	77	0.1827	36	79	•	•	•
3.7	5	**MX 4SA 4**	1450	24.4	216	7.5	88.4	90.0	88.8	0.80	8.4	3.9	2.5	L	225	0.5339	45	99	**FD 55**	74	354	—	1100	235	0.5577	57	126		•	
4	5.4	**MX 4SA 4**	1460	26.0	232	7.8	88.6	89.9	88.7	0.82	8.1	3.7	2.5	J	225	0.5339	45	99	**FD 56**	75	663	—	1100	235	0.5577	58	128	•		•
5.5	7.5	**MX 4SB 4**	1460	36.0	318	10.6	89.6	89.9	88.8	0.83	8.2	3.6	2.3	J	310	0.7356	57	126	**FD 56**	75	663	—	700	320	0.7594	70	154	•	•	•
7.5	10	**MX 4LA 4**	1460	49.0	434	15.0	90.4	90.9	90.2	0.80	8.4	3.8	2.5	K	360	0.8543	67	148	**FD 06**	100	885	—	700	370	0.8780	80	176	•	•	•
9.2	12.5	**MX 5SA 4**	1465	60.0	531	17.8	91.0	92.1	91.7	0.82	7.9	3.6	2.1	J	650	1.5425	95	209	**FD 08**	170	1505	—	620	725	1.7205	125	276	•		•
11	15	**MX 5SB 4**	1465	72.0	635	20.5	91.4	92.9	92.5	0.84	7.8	3.4	1.9	J	780	1.8509	110	243	**FD 08**	170	1505	—	470	855	2.0289	140	309	•		•
15	20	**MX 5LA 4**	1465	98.0	865	28.1	92.1	93.2	92.6	0.82	9.0	4.1	2.3	K	890	2.1120	121	267	**FD 08**	200	1770	—	510	965	2.2900	151	333	•		•

4 P	1800 min^{-1} - S1	60 Hz

																			d.c. brake FD									Standard	CUS variant
P_n			n	M_n		In 460V	η%			cos φ	$\frac{I_s}{I_n}$	$\frac{M_s}{M_n}$	$\frac{M_a}{M_n}$	KVA code	J_m x 10^{-4}		IM B5		Mod	M_b		Z_o 1/h		J_m x 10^{-4}		IM B5		CE	CE + UL
kW	hp		min^{-1}	Nm	lb·in	A	100%	75%	50%						kgm^2	lb·ft^2	Kg	lbs		Nm	lb·in	NB	SB	kgm^2	lb·ft^2	Kg	lbs		
0.12	0.16	**MX 05A 4**	1700	0.7	5.9	0.49	66.0	63.1	56.0	0.50	4.1	3.8	2.7	L	1.82	0.0043	2.9	6.38	**FD 02**	1.75	15	8900	11000	2.4	0.005695135	4.6	10	•	
0.18	0.25	**MX 05B 4**	1695	1.0	9.0	0.52	69.5	69.5	67.9	0.57	4.3	3.2	3.0	J	2.9	0.0069	4.8	11	**FD 02**	3.5	31	7000	9000	3.5	0.0083	7	12	•	
0.25	0.33	**MX 1SA 4**	1715	1.4	12.4	0.55	73.4	76.1	71.5	0.71	5.2	2.6	2.8	G	6.3	0.0150	5.4	12	**FD 03**	3.5	31	5700	8100	8.4	0.0190	8.1	18	•	
0.37	0.5	**MX 1SB 4**	1735	2.0	17.7	0.9	78.2	79.2	75.1	0.66	6.9	4.1	3.7	M	10	0.0230	6.9	15	**FD 03**	5	44	4800	6800	11.8	0.0280	10	22	•	
0.55	0.75	**MX 2SA 4**	1730	3.0	26.5	1.11	81.1	78.3	74	0.78	7.7	4.3	3.4	L	28	0.0664	12.2	26.9	**FD 04**	15	133	2000	3900	29.6	0.0702	16.1	36	•	
0.75	1	**MX 2SB 4**	1740	4.1	36	1.43	85.5	85.8	84.2	0.78	7.3	2.4	2.2	L	35	0.0831	16	35	**FD 04**	15	133	1400	2800	37	0.0878	20	44	•	
0.75	1	**MX 2SB 4**	1755	4.1	36	1.48	85.5	86.4	83.9	0.73	8.0	3.7	2.5	L	27	0.0641	16	35	**FD 14**	15	132	1800	3700	29	0.0688	20	45	•	•
1.1	1.5	**MX 3SA 4**	1755	6.0	53	2.19	86.5	86.0	83.0	0.73	7.9	3.3	2.5	L	35	0.0831	17	37	**FD 15**	26	133	800	2200	39	0.0925	24	53	•	•
1.5	2	**MX 3SB 4**	1755	8.2	72	2.96	86.5	87.2	85.0	0.72	8.5	3.7	2.9	L	43	0.1020	20	44	**FD 15**	26	230	750	2000	47	0.1115	27	60	•	•
2.2	3	**MX 3LA 4**	1760	11.9	106	4.4	89.5	88.6	86.2	0.71	9.9	4.8	3.6	N	73	0.1732	29	64	**FD 15**	40	354	470	1300	77	0.1827	36	79	•	•
3	4	**MX 3LB 4**	1750	16.4	145	5.9	89.5	88.9	86.7	0.71	9.1	4.4	3.3	M	73	0.1732	29	64	**FD 15**	40	354	640	1700	77	0.1827	36	79	•	•
3.7	5	**MX 4SA 4**	1770	20.0	177	6.6	89.5	89.8	87.7	0.78	9.9	4.7	3.4	M	225	0.5339	45	99	**FD 56**	75	664	—	465	235	0.5577	58	128	•	•
5.5	7.5	**MX 4SB 4**	1770	30.0	263	9.9	91.7	92.0	90.2	0.76	10.7	5.1	4.6	N	410	0.9729	77	170	**FD 56**	75	664	—	130	420	0.9967	90	198	•	•
7.5	10	**MX 4LA 4**	1770	41.0	358	13.4	91.7	91.3	89.7	0.76	11.0	4.9	4.4	N	410	0.9729	77	170	**FD 06**	100	885	—	230	420	0.9967	90	198	•	•
9.2	12.5	**MX 5SA 4**	1770	50.0	439	15.6	92.4	92.5	91.6	0.80	9.1	4.1	2.6	L	650	1.5425	95	209	**FD 08**	170	1505	—	280	725	1.7205	125	276	•	•
11	15	**MX 5SB 4**	1770	59.0	525	18.2	92.4	92.9	92.0	0.82	9.3	4.0	2.4	L	780	1.8509	110	243	**FD 08**	170	1505	—	230	855	2.0289	140	309	•	•
15	20	**MX 5LA 4**	1770	81.0	716	24.5	93.0	93.5	92.5	0.81	10.9	4.8	2.8	M	890	2.1120	121	267	**FD 08**	200	1770	—	240	965	2.2900	151	333	•	•

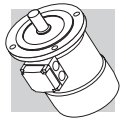

BX - IM B3

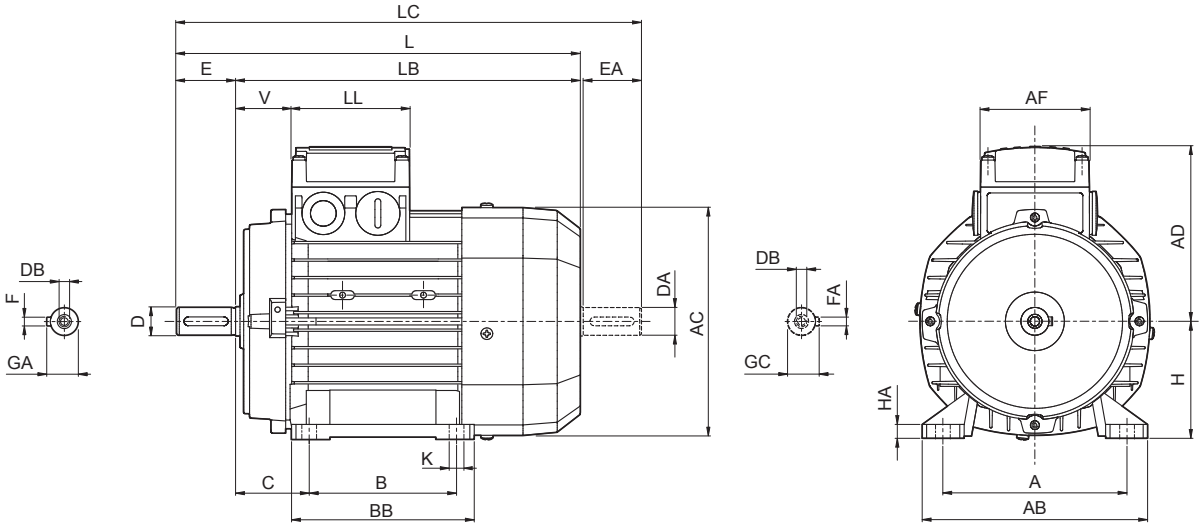

	Shaft					Housing						Motor									
	D DA	E EA	DB	GA GC	F FA	B	A	HA	BB	AB	K	C	H	AC	L	LB	LC	AD	AF	LL	V
BX 63A	11 9(1)	23 20(1)	M4 M3(1)	12.5 10.2(1)	4 3(1)	80	100	8	96	120	7	40	63	121	206	183	228	95	74	80	26
BX 63B																					
BX 63C															226	203	248				
BX 71A	14 11(1)	30 23(1)	M5 M4(1)	16 12.5(1)	5 4(1)	90	112		112	135		45	71	138	249	219	274	108			37
BX 71B																					
BX 80A	19 14(1)	40 30(1)	M6 M5(1)	21.5 16(1)	6 5(1)	100	125		124	153	10	50	80	156	274	234	306	119			38
BX 80 B															320	280	351				
BX 90 S	24 19(1)	50 40(1)	M8 M6(1)	27 21.5(1)	8 6(1)		140		155	174		56	90	176	326	276	368	133			44
BX 90 LA						125											378				
BX 100 LA	28 24(1)	60 50(1)	M10 M8(1)	31 27(1)	8 8(1)	140	160	10	175	192	12	63	100	195	410	350	462	142	98	98	50
BX 100 LB																					
BX 112 M							190			224		70	112	219	430	370	482	157			52
BX 132 SB	38 28(1)	80 60(1)	M12 M10(1)	41 31(1)	10 8(1)	140	216	12	218	254	12	89	132	258	493	413	556	193	118	118	58
BX 132 MA						178									528	448	591				
BX 160 MA	42 38(1)	110 80(1)	M16 M12(1)	45 41(1)	12 10(1)	210	254	25	264	319	14.5	108	160	310	596	486	680	245	187	187	51
BX 160 MB						254			304						640	530	724				
BX 160 L																					
BX 180 M	48 42(1)	110 110(1)	M16 M16(1)	51.5 45(1)	14 12(1)	241	279	26	291	359	14	121	180	348	708	598	823	261			52
BX 180 L						279			329												
BX 200LAK	55 45(1)				16 14(1)	267	318	23	345	378	18.5	133	200	417	821	711	934	328	300	311	55
BX 225SAK	60 55(1)	140 110(1)	M20 M20(1)	"64 59(1)	18 16(1)	286	356		351	435		149	225	460	879	739	1001	348			48
BX 225SBK																					
BX 250MAK	65 55(1)			"69 59(1)		311	406		392	480	24	168	250	510	884	744	1010	376			
BX 280SAK	75 65(1)	140 140(1)		"79.5 69(1)"	20 18(1)	368	457	31	506	530		190	280	564	1088	948	1238	482	434	306	43
BX 280SBK																					
BX 315SAK	80 75(1)	170 140(1)		"85 79.5(1)"	22 20(1)	406	508	40	558	590	28	216	315	639	1204	1034	1352	537	473	347	42
BX 315SBK																					
BX 315SCK															1315	1145	1453				
BX 355SAK	100 75(1)	210 170(1)	M24 M20(1)	106 79.5(1)	28 20(1)	500	610	45	722	700	35	254	355	740	1479	1269	1659	603	694	413	50
BX 355MAK																					
BX 355MBK																					
BX 355MCK															1584	1374	1764				

N.B.: 1) These values refer to the rear shaft end (PS).

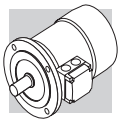

BX - IM B5

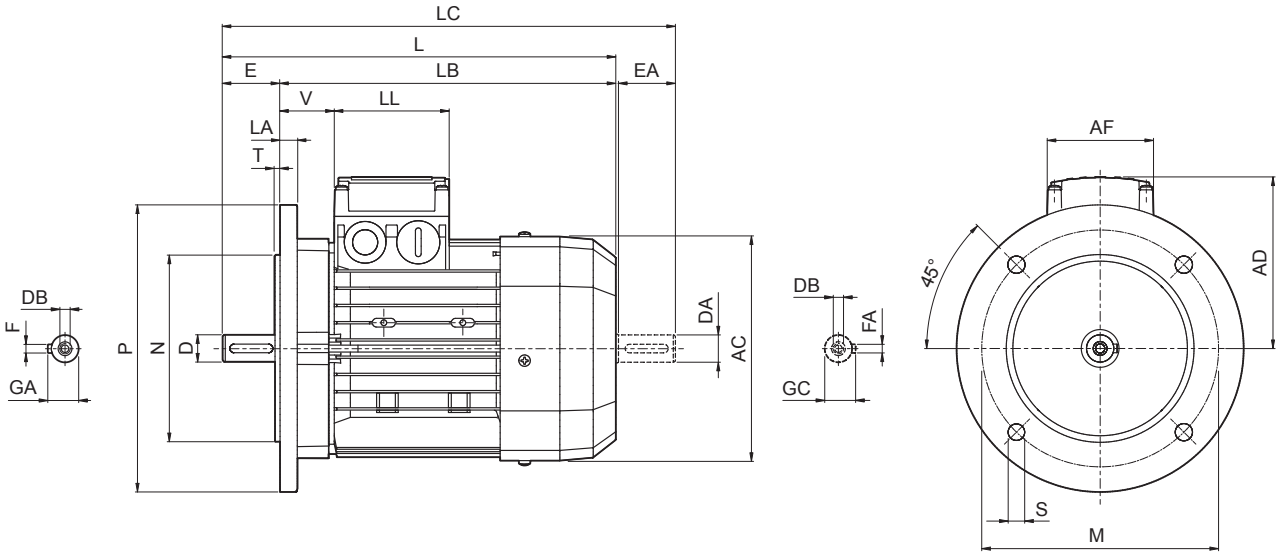

	Shaft					Flange						Motor							
	D DA	**E EA**	**DB**	**GA GC**	**F FA**	**M**	**N**	**P**	**S**	**T**	**LA**	**AC**	**L**	**LB**	**LC**	**AD**	**AF**	**LL**	**V**
BX 63A	11 9(1)	23 20(1)	M4 M3(1)	12.5 10.2(1)	4 3(1)	115	95	140	9.5	3	10	121	206	183	228	95	74	80	26
BX 63B																			
BX 63C													226	203	248				
BX 71A	14 11(1)	30 23(1)	M5 M4(1)	16 12.5(1)	5 4(1)	130	110	160		3.5		138	249	219	274	108			37
BX 71B																			
BX 80A	19 14(1)	40 30(1)	M6 M5(1)	21.5 16(1)	6 5(1)	165	130	200	11.5		11.5	156	274	234	306	119			38
BX 80 B													320	280	351				
BX 90 S	24 19(1)	50 40(1)	M8 M6(1)	27 21.5 (1)	8 6(1)							176	326	276	368	133	98	98	44
BX 90 LA																			
BX 100 LA	28 24(1)	60 50(1)	M10 M8(1)	31 27(1)	8 8(1)	215	180	250	14	4	14	195	410	350	462	142			50
BX 100 LB																			
BX 112 M											15	219	430	370	482	157			52
BX 132 SB	38 28(1)	80 60(1)	M12 M10(1)	41 31(1)	10 8(1)	265	230	300			20	258	493	413	556	193	118	118	58
BX 132 MA													528	448	591				
BX 160 MA	42 38(1)	110 80(1)	M16 M12(1)	45 41(1)	12 10(1)	300	250	350	18.5	5	15	310	596	486	680	245	187	187	51
BX 160 MB													640	530	724				
BX 160 L																			
BX 180 M	48 42(1)	110 110(1)	M16 M16(1)	51.5 45(1)	14 12(1)						18	348	708	598	823	261			52
BX 180 L																			
BX 200LAK	55 45(1)		M20 M20(1)	59 48.5(1)	16 14(1)	350	300	400	19		20	423	821	711	934	328	300	311	55
BX 225SAK	60 55(1)	140 110(1)		64 59(1)	18 16(1)	400	350	450	19			465	879	739	1001	348			48
BX 225SBK																			
BX 250MAK	65 55(1)			69 59(1)		500	450	550	19		24	514	884	744	1010	376			
BX 280SAK	75 65(1)			79.5 69(1)	20 18(1)				18		23	567	1086	948	1238	482	434	306	43
BX 280SBK																			
BX 315SAK	80 75(1)	170 140(1)		85 79.5(1)	22 20(1)	600	550	660	23	6	25	645	1204	1034	1352	537	473	347	42
BX 315SBK																			
BX 315SCK													1315	1145	1453				
BX 355SAK	100 75(1)	210 170(1)	M24 M20(1)	106 79.5(1)	28 20(1)	740	680	800				740	1479	1269	1659	603	694	413	50
BX 355MAK																			
BX 355MBK																			
BX 355MCK													1584	1374	1764				

N.B.: 1) These values refer to the rear shaft end (PS).
CEL certification on BX is available from size 100LA to 355MCK

BX - IM B14

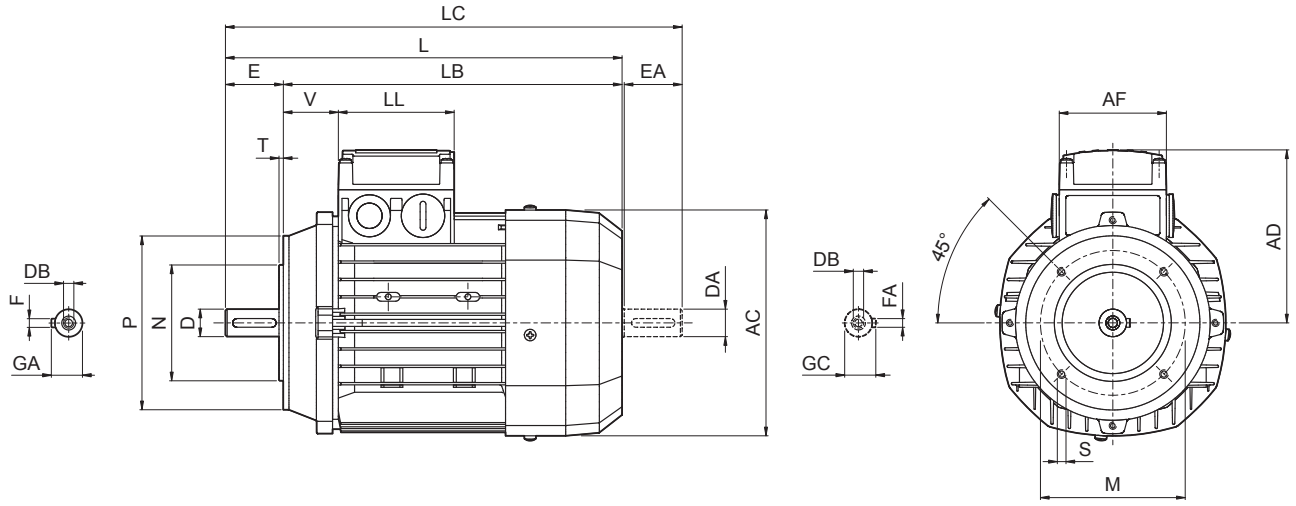

	Shaft					Housing					Motor							
	D DA	**E EA**	**DB**	**GA GC**	**F FA**	**M**	**N**	**P**	**S**	**T**	**AC**	**L**	**LB**	**LC**	**AD**	**AF**	**LL**	**V**
BX 63A	11 9(1)	23 20(1)	M4 M3(1)	12.5 10.2(1)	4 3(1)	75	60	90	M5	2.5	121	206	183	228	95	74	80	26
BX 63B																		
BX 63C												226	203	248				
BX 71A	14 11(1)	30 23(1)	M5 M4(1)	16 12.5(1)	5 4(1)	85	70	105	M6			249	219	274	108			37
BX 71B																		
BX 80A	19 14(1)	40 30(1)	M6 M5(1)	21.5 16(1)	6 5(1)	100	80	120		3	156	274	234	306	119			38
BX 80 B												320	280	351				
BX 90 S	24 19(1)	50 40(1)	M8 M6(1)	27 21.5 (1)	8 6(1)	115	95	140	M8		176	326	276	368	133	98	98	44
BX 90 LA																		
BX 100 LA	28 24(1)	60 50(1)	M10 M8(1)	31 27(1)	8 8(1)	130	110	160		3.5	195	410	350	462	142			50
BX 100 LB																		
BX 112 M											219	430	370	482	157			52
BX 132 SB	38 28(1)	80 60(1)	M12 M10(1)	41 31(1)	10 8(1)	165	130	200	M10	4	258	493	413	556	193	118	118	58
BX 132 MA												528	448	591				

N.B.: 1) These values refer to the rear shaft end (PS).

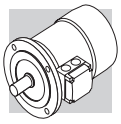

BX - IM B3 - FD

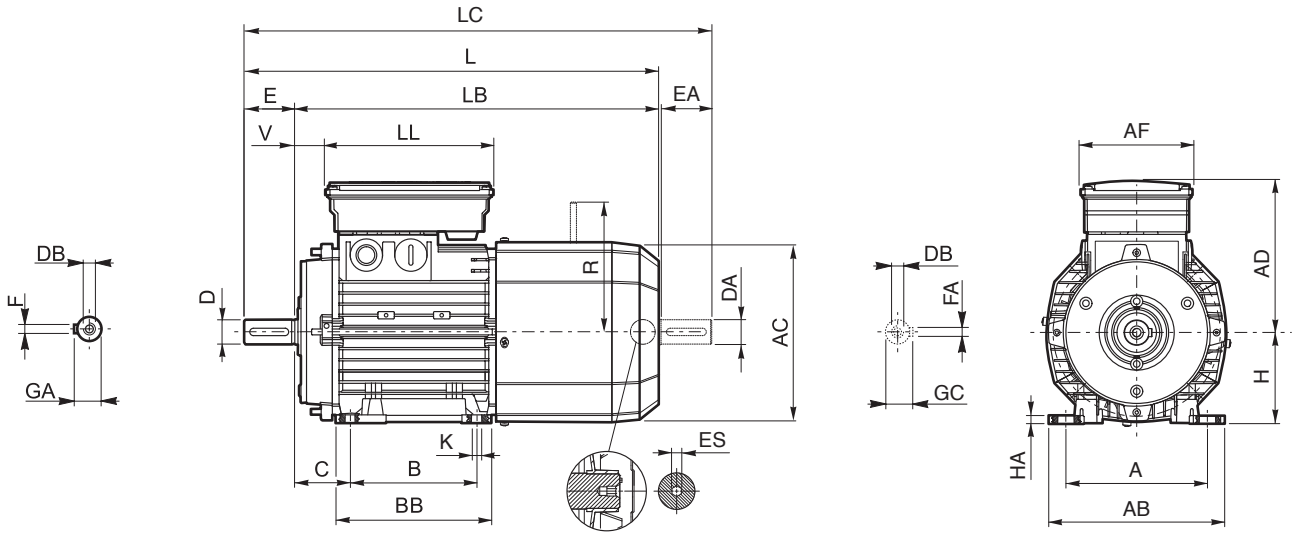

	Shaft					Housing						Motor											
	D DA	E EA	DB	GA GC	F FA	B	A	HA	BB	AB	K	C	H	AC	L	LB	LC	AD	AF	LL	V	R FD	ES [2]
BX 63A	11 9[1]	23 20[1]	M4 M3[1]	12.5 10.2[1]	4 3[1]	80	100		96	120		40	63	121	272	249	294	122			14	96	
BX 63B											7												
BX 63C																							
BX 71A	14 11[1]	30 23[1]	M5 M4[1]	16 12.5[1]	5 4[1]	90	112	8	112	135		45	71	138	313	283	338	135	98	133	24	103	5
BX 71B																							
BX 80A	19 14[1]	40 30[1]	M6 M5[1]	21.5 16[1]	6 5[1]	100	125		124	153	10	50	80	156	346	306	378	143			25		
BX 80 B															392	352	423					129	
BX 90 S	24 19[1]	50 40[1]	M8 M6[1]	27 21.5[1]	8 6[1]		140		155	174		56	90	176	410	360	452	146			32		
BX 90 LA						125																160	6
BX 100 LA	28 24[1]	60 50[1]	M10 M8[1]	31 27[1]	8 8[1]	140	160	10	175	192	12	63	100	195	502	442	554	155	110	165	37		
BX 100 LB																							
BX 112 M							190			224		70	112	219	527	467	579	170			39	199	
BX 132 SB	38 28[1]	80 60[1]	M12 M10[1]	41 31[1]	10 8[1]	140	216	12	218	254	12	89	132	258	603	523	667	210	140	188	46	204	
BX 132 MA						178									627	547	690						
BX 160 MA	42 38[1]	110 80[1]	M16 M12[1]	45 41[1]	12 10[1]	210	254	25	264	319	14.5	108	160	310	736	626	820	245	187	187	51	266	—
BX 160 MB						254			304						780	670	864						
BX 160 L																							
BX 180 M	48 42[1]	110 110[1]	M16 M16[1]	51.5 45[1]	14 12[1]	241	279	26	291	359	14	121	180	348	866	756	981	261			52	305	
BX 180 L						279			329														
BX 200LAK	55 45[1]		M20 M16[1]	59 48.5[1]	16 14[1]	267	318		345	378	18.5	133	200	417	967	857	1082	328			55	275	
BX 225SAK	60 55[1]	140 110[1]		64 59[1]	18 16[1]	286	356	23	351	435		149	225	460	1065	925	1180	348	300	311	48	308	
BX 225SBK																							
BX 250MAK	65 55[1]			69 59[1]		311	406		392	480	24	168	250	510	1070	930	1240	376				313	
BX 280SAK	75 65[1]	140 140[1]	M20 M20[1]	79.5 69[1]	20 18[1]	368	457	31	506	530		190	280	564	1284	1144	1379	482	434	306	43		
BX 280SBK																							
BX 315SAK	80 75[1]	170 140[1]		85 79.5[1]	22 20[1]	406	508	40	558	590	28	216	315	639	1493	1323	1643	537	473	347	42	500	
BX 315SBK															1530	1360	1680						
BX 315SCK															1604	1434	1791						
BX 355SAK	100 90[1]	210 170[1]	M24 M24[1]	106 95[1]	28 25[1]	500	610	45	722	700	35	254	355	725	1722	1512	1902	603	694	413	50	—	
BX 355MAK																							
BX 355MBK																							
BX 355MCK															1827	1617	2082						

N.B.: 1) These values refer to the rear shaft end (PS). 2) “ES” hexagon is not present with PS option

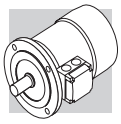

BX - IM B5 - FD

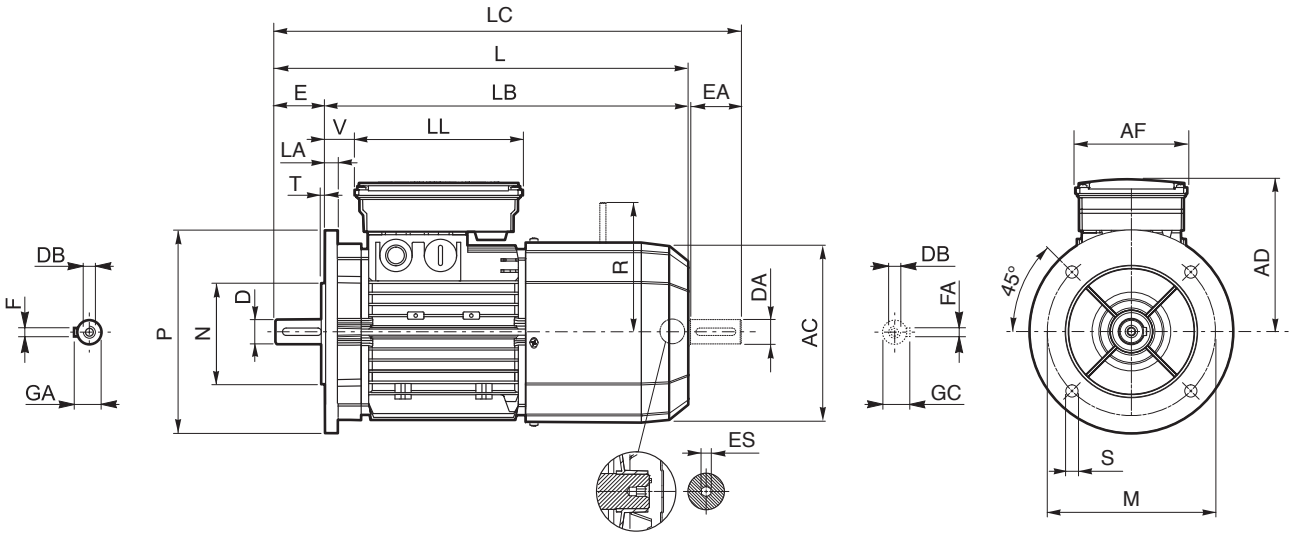

	Shaft					Flange						Motor									
	D DA	E EA	DB	GA GC	F FA	M	N	P	S	T	LA	AC	L	LB	LC	AD	AF	LL	V	R FD	ES (2)
BX 63A	11 9(1)	23 20(1)	M4 M3(1)	12.5 10.2(1)	4 3(1)	115	95	140	9.5	3	10	121	272	249	294	122	98	133	14	96	5
BX 63B																					
BX 63C																					
BX 71A	14 11(1)	30 23(1)	M5 M4(1)	16 12.5(1)	5 4(1)	130	110	160		3.5		138	313	283	338	135			24	103	
BX 71B																					
BX 80A	19 14(1)	40 30(1)	M6 M5(1)	21.5 16(1)	6 5(1)	165	130	200	11.5		11.5	156	346	306	378	143			25	129	
BX 80 B													392	352	423						
BX 90 S	24 19(1)	50 40(1)	M8 M6(1)	27 21.5 (1)	8 6(1)							176	410	360	452	146	110	165	32	160	6
BX 90 LA																					
BX 100 LA	28 24(1)	60 50(1)	M10 M8(1)	31 27(1)	8 8(1)	215	180	250	14	4	14	195	502	442	554	155			37		
BX 100 LB																					
BX 112 M											15	219	527	467	579	170			39	199	
BX 132 SB	38 28(1)	80 60(1)	M12 M10(1)	41 31(1)	10 8(1)	265	230	300			16	258	603	523	667	210	140	188	46	204	
BX 132 MA													627	547	690						
BX 160 MA	42 38(1)	110 80(1)	M16 M12(1)	45 41(1)	12 10(1)	300	250	350	18.5	5	15	310	736	626	820	245	187	187	51	266	—
BX 160 MB													780	670	864						
BX 160 L																					
BX 180 M	48 42(1)	110 110(1)	M16 M16(1)	51.5 45(1)	14 12(1)						18	348	866	756	981	261			52	305	
BX 180 L																					
BX 200LAK	55 45(1)		M20 M16(1)	59 48.5(1)	16 14(1)	350	300	400	19	5	20	417	967	857	1082	328	300	311	55	275	
BX 225SAK	60 55(1)	140 110(1)	M20 M20(1)	64 59(1)	18 16(1)	400	350	450				460	1065	925	1180	348			48	308	
BX 225SBK																					
BX 250MAK	65 55(1)			69 59(1)		500	450	550			24	510	1070	930	1240	376				313	
BX 280SAK	75 65(1)	140 140(1)		79.5 69(1)	20 18(1)				18		23	564	1284	1144	1379	482	434	306	43		
BX 280SBK																					
BX 315SAK	80 75(1)	170 140(1)		85 79.5(1)	22 20(1)	600	550	660	23	6	25	639	1493	1323	1643	537	473	347	42	500	
BX 315SBK													1530	1360	1680						
BX 315SCK													1604	1434	1791						
BX 355SAK	100 90(1)	210 170(1)	M24 M24(1)	106 95(1)	28 25(1)	740	680	800				725	1722	1512	1902	603	694	413	50	—	
BX 355MAK																					
BX 355MBK																					
BX 355MCK													1827	1617	2082						

N.B.: 1) These values refer to the rear shaft end (PS). 2) “ES” hexagon is not present with PS option
CEL certification on BX is available from size 100LA to 355MCK

BX - IM B14 - FD

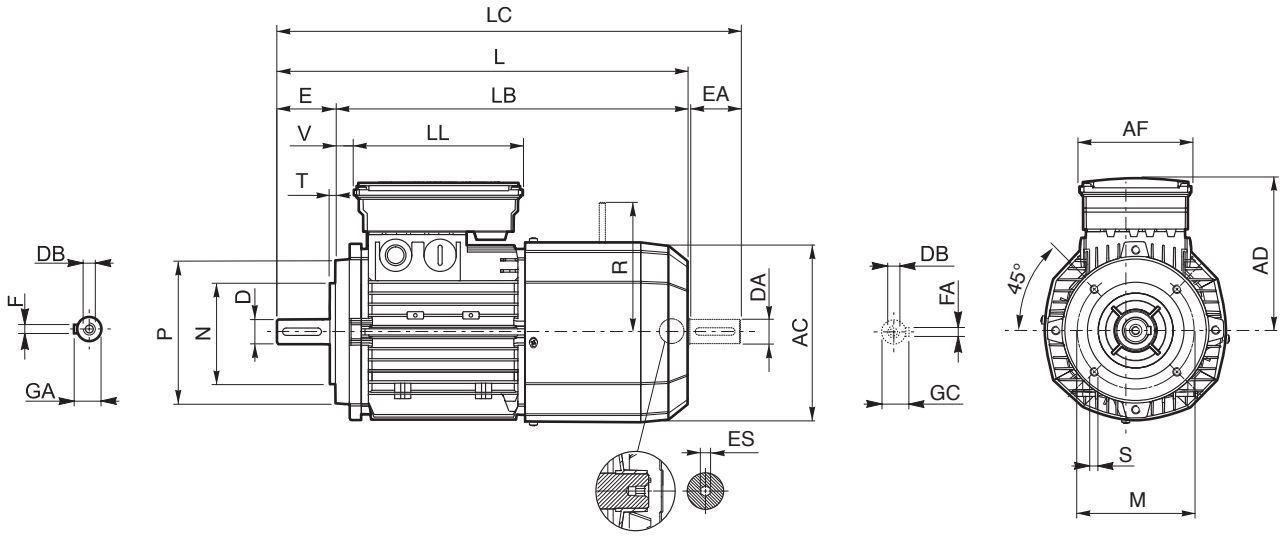

BX-IE3

	Shaft					Housing					Motor									
	D DA	E EA	DB	GA GC	F FA	M	N	P	S	T	AC	L	LB	LC	AD	AF	LL	V	R FD	ES (2)
BX 63A	11 9(1)	23 20(1)	M4 M3(1)	12.5 10.2(1)	4 3(1)	75	60	90	M5	2.5	121	272	249	294	122	98	133	14	96	5
BX 63B																				
BX 63C																				
BX 71A	14 11(1)	30 23(1)	M5 M4(1)	16 12.5(1)	5 4(1)	85	70	105	M6		138	313	283	338	135			24	103	
BX 71B																				
BX 80A	19 14(1)	40 30(1)	M6 M5(1)	21.5 16(1)	6 5(1)	100	80	120			156	392	352	423	143			25	129	
BX 80 B										3										
BX 90 S	24 19(1)	50 40(1)	M8 M6(1)	27 21.5 (1)	8 6(1)	115	95	140	M8		176	410	360	452	146	110	165	32		6
BX 90 LA																			160	
BX 100 LA	28 24(1)	60 50(1)	M10 M8(1)	31 27(1)	8 8(1)	130	110	160		3.5	195	502	442	554	155			37		
BX 100 LB																				
BX 112 M											219	527	467	579	170			39	199	
BX 132 SB	38 28(1)	80 60(1)	M12 M10(1)	41 31(1)	10 8(1)	165	130	200	M10	4	258	603	523	667	210	140	188	46	204	
BX 132 MA												627	547	690						

N.B.: 1) These values refer to the rear shaft end (PS). 2) “ES” hexagon is not present with PS option

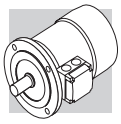

BX - IM B3 - CUS/NBR

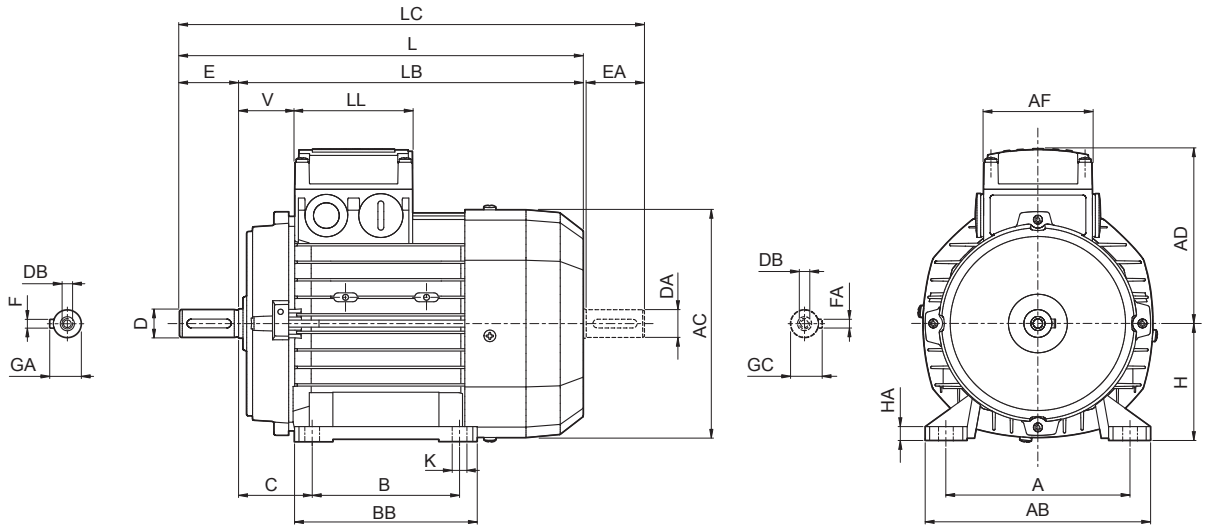

	Shaft					Housing						Motor									
	D DA	**E EA**	**DB**	**GA GC**	**F FA**	**B**	**A**	**HA**	**BB**	**AB**	**K**	**C**	**H**	**AC**	**L**	**LB**	**LC**	**AD**	**AF**	**LL**	**V**
BX 90 SR	19 19(1)	40 40(1)	M6 M6(1)	21.5 21.5(1)	6 6(1)	100	140	8	155	174	10	56	90	176	316	276	358	133	98	98	44
BX 90 S	24 19(1)	50 40(1)	M8 M6(1)	27 21.5(1)	8 6(1)										326		368				
BX 90 LA						125											378				
BX 100 LA	28 24(1)	60 50(1)	M10 M8(1)	31 27(1)	8 8(1)	140	160	10	175	192	12	63	100	195	410	350	462	142			50
BX 100 LB																					
BX 112 M							190			224		70	112	219	430	370	482	157			52
BX 132 SB	38 28(1)	80 60(1)	M12 M10(1)	41 31(1)	10 8(1)		216	12	218	254	12	89	132	258	552	472	615	193	118	118	58
BX 132 MA						178															
BX 160 MA	42 38(1)	110 80(1)	M16 M12(1)	45 41(1)	12 10(1)	210	254	25	264	319	14.5	108	160	310	596	486	680	245	187	187	51
BX 160 MB						254			304						640	530	724				
BX 160 L																					
BX 180 M	48 42(1)	110 110(1)	M16 M16(1)	51.5 45(1)	14 12(1)	241	279	26	291	359	14	121	180	348	708	598	823	261			52
BX 180 L						279			329												
BX 200LAK	55 45(1)		M20 M16(1)	59 48.5(1)	16 14(1)	267	318	23	345	378	18.5	133	200	417	821	711	934	328	300	311	55
BX 225SAK	60 55(1)	140 110(1)	M20 M20(1)	64 59(1)	18 16(1)	286	356		351	435		149	225	460	879	739	1001	348			48
BX 225SBK																					
BX 250MAK	65 55(1)			69 59(1)		311	406		392	480	24	168	250	510	884	744	1010	376			
BX 280SAK	75 65(1)	140 140(1)		79.5 69(1)	20 18(1)	368	457	31	506	530		190	280	564	1088	948	1238	482	434	306	43
BX 280SBK																					
BX 315SAK	80 75(1)	170 140(1)		85 79.5(1)	22 20(1)	406	508	40	558	590	28	216	315	639	1204	1034	1352	537	473	347	42
BX 315SBK																					
BX 315SCK															1315	1145	1453				
BX 355SAK	100 75(1)	210 170(1)	M24 M20(1)	106 79.5(1)	28 20(1)	500	610	45	722	700	35	254	355	740	1479	1269	1659	603	694	413	50
BX 355MAK																					
BX 355MBK																					
BX 355MCK															1584	1374	1764				

N.B.: 1) These values refer to the rear shaft end (PS).

BX - IM B5 - CUS/NBR

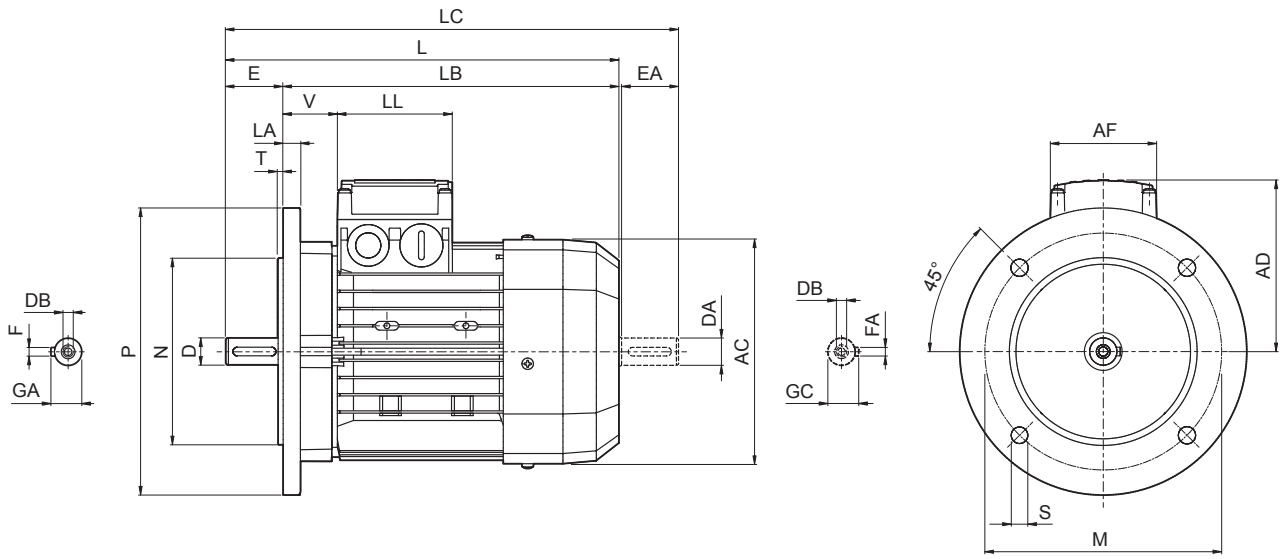

	Shaft					Flange						Motor							
	D DA	**E EA**	**DB**	**GA GC**	**F FA**	**M**	**N**	**P**	**S**	**T**	**LA**	**AC**	**L**	**LB**	**LC**	**AD**	**AF**	**LL**	**V**
BX 90 SR	19 19(1)	40 40(1)	M6 M6(1)	21.5 21.5(1)	6 6(1)	165	130	200	11.5	3.5	11.5	176	316	276	358	133	98	98	44
BX 90 S	24 19(1)	50 40(1)	M8 M6(1)	27 21.5(1)	8 6(1)								326		368				
BX 90 LA																			
BX 100 LA	28 24(1)	60 50(1)	M10 M8(1)	31 27(1)	8 8(1)	215	180	250	14	4	14	195	410	350	462	142			50
BX 100 LB																			
BX 112 M											15	219	430	370	482	157			52
BX 132 SB	38 28(1)	80 60(1)	M12 M10(1)	41 31(1)	10 8(1)	265	230	300			20	258	552	472	615	193	118	118	58
BX 132 MA																			
BX 160 MA	42 38(1)	110 80(1)	M16 M12(1)	45 41(1)	12 10(1)	300	250	350	18.5	5	15	310	596	486	680	245	187	187	51
BX 160 MB													640	530	724				
BX 160 L																			
BX 180 M	48 42(1)	110 110(1)	M16 M16(1)	51.5 45(1)	14 12(1)						18	348	708	598	823	261			52
BX 180 L																			
BX 200LAK	55 45(1)	110 110(1)	M20 M20(1)	59 48.5(1)	16 14(1)	350	300	400	19	5	20	423	821	711	934	328	300	311	55
BX 225SAK	60 55(1)	140 110(1)	M20 M20(1)	64 59(1)	18 16(1)	400	350	450	19	5	20	465	879	739	1001	348	300	311	48
BX 225SBK																			
BX 250MAK	65 55(1)	140 110(1)	M20 M20(1)	69 59(1)	18 16(1)	500	450	550	19	5	24	514	884	744	1010	376	300	311	
BX 280SAK	75 65(1)	140 140(1)	M20 M20(1)	79.5 69(1)	20 18(1)	500	450	550	18	5	23	567	1088	948	1238	482	434	306	43
BX 280SBK																			
BX 315SAK	80 75(1)	170 140(1)	M20 M20(1)	85 79.5(1)	22 20(1)	600	550	660	23	6	25	645	1204	1034	1352	537	473	347	42
BX 315SBK																			
BX 315SCK													1315	1145	1453				
BX 355SAK	100 75(1)	210 170(1)	M24 M20(1)	106 79.5(1)	28 20(1)	740	680	800	23	6	25	740	1479	1269	1659	603	694	413	50
BX 355MAK																			
BX 355MBK																			
BX 355MCK													1584	1374	1764				

N.B.: 1) These values refer to the rear shaft end (PS).

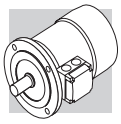

BX - IM B14 - CUS/NBR

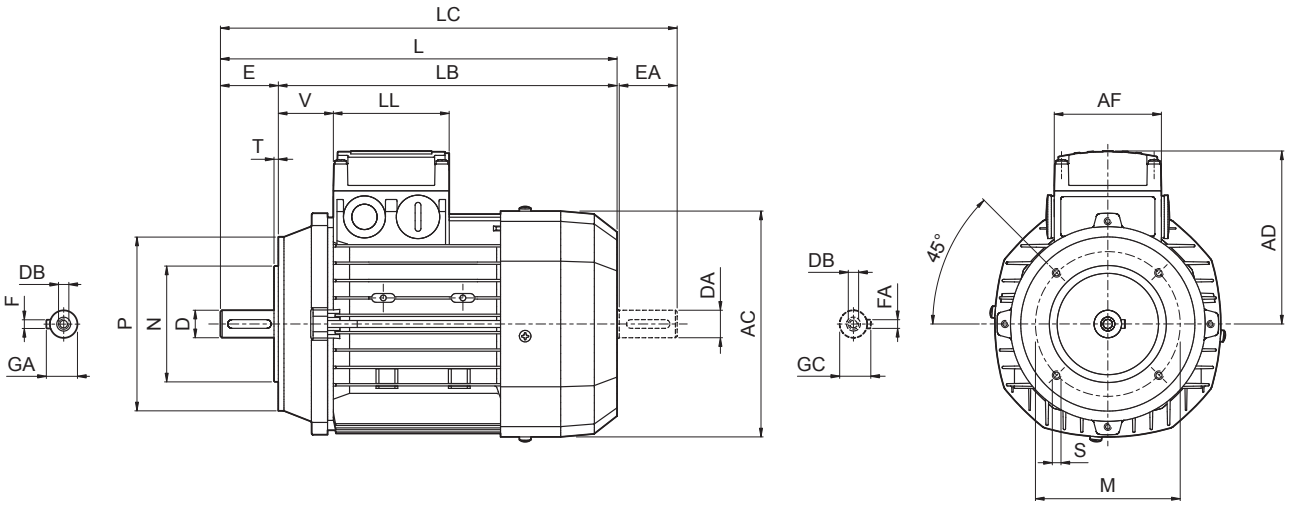

	Shaft					Housing					Motor							
	D DA	**E EA**	**DB**	**GA GC**	**F FA**	**M**	**N**	**P**	**S**	**T**	**AC**	**L**	**LB**	**LC**	**AD**	**AF**	**LL**	**V**
BX 90 SR	19 19(1)	40 40(1)	M6 M6(1)	21.5 21.5(1)	6 6(1)	100	80	120	M6	3	176	316	276	358	133	98	98	44
BX 90 S	24 19(1)	50 40(1)	M8 M6(1)	27 21.5 (1)	8 6(1)	115	95	140	M8			326		368				
BX 90 LA																		
BX 100 LA	28 24(1)	60 50(1)	M10 M8(1)	31 27(1)	8 8(1)	130	110	160		3.5	195	410	350	462	142			50
BX 100 LB																		
BX 112 M											219	430	370	482	157			52
BX 132 SB	38 28(1)	80 60(1)	M12 M10(1)	41 31(1)	10 8(1)	165	130	200	M10	4	258	552	472	615	193	118	118	58
BX 132 MA																		

N.B.: 1) These values refer to the rear shaft end (PS).

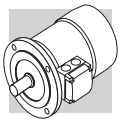

BX - IM B3 - FD - CUS/NBR

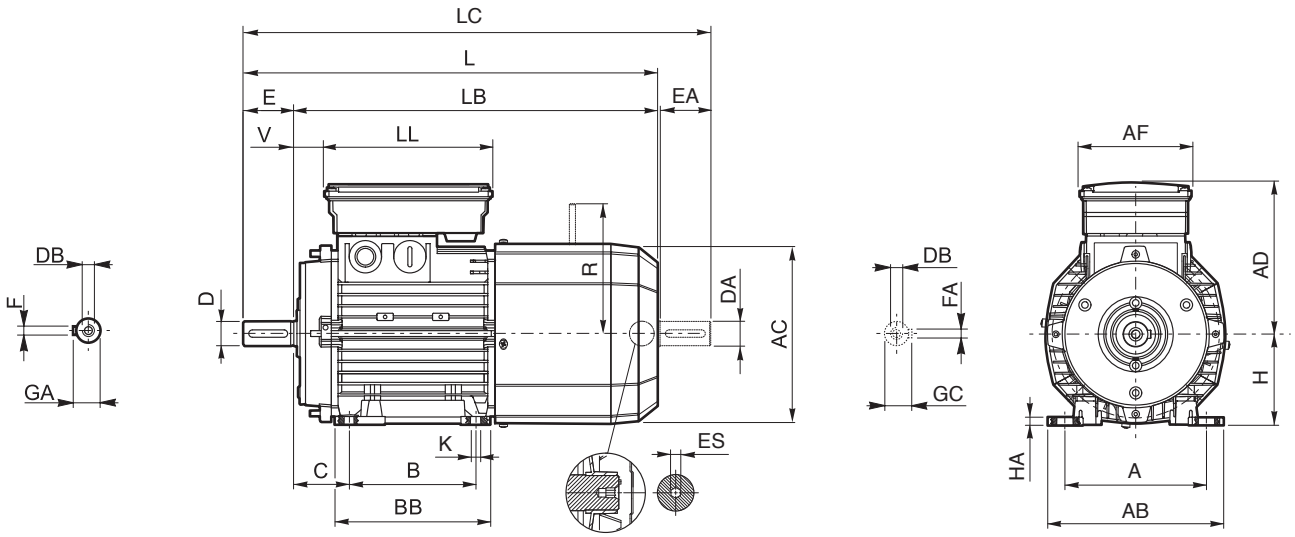

	Shaft					Housing						Motor											
	D DA	E EA	DB	GA GC	F FA	B	A	HA	BB	AB	K	C	H	AC	L	LB	LC	AD	AF	LL	V	R FD	ES (2)
BX 90 SR	19 19(1)	40 40(1)	M6 M6(1)	21.5 21.5(1)	6 6(1)	100	140	8	155	174	10	56	90	176	400	360	442	146	110	165	32	129	6
BX 90 S	24 19(1)	50 40(1)	M8 M6(1)	27 21.5 (1)	8 6(1)										410		452						
BX 90 LA						125																160	
BX 100 LA	28 24(1)	60 50(1)	M10 M8(1)	31 27(1)	8 8(1)	140	160	10	175	192	12	63	100	195	502	442	554	155			37		
BX 100 LB																							
BX 112 M							190			224		70	112	219	527	467	579	170			39	199	
BX 132 SB	38 28(1)	80 60(1)	M12 M10(1)	41 31(1)	10 8(1)	140	216	12	218	254		89	132	258	661	581	724	210	140	188	46	204	
BX 132 MA						178																	
BX 160 MA	42 38(1)	110 80(1)	M16 M12(1)	45 41(1)	12 10(1)	210	254	25	264	319	14.5	108	160	310	736	626	820	245	187	187	51	266	—
BX 160 MB						254			304						780	670	864						
BX 160 L																							
BX 180 M	48 42(1)	110 110(1)	M16 M16(1)	51.5 45(1)	14 12(1)	241	279	26	291	359	14	121	180	348	866	756	981	261			52	305	
BX 180 L						279			329														
BX 200LAK	55 45(1)		M20 M16(1)	59 48.5(1)	16 14(1)	267	318		345	378	18.5	133	200	417	967	857	1082	328	300	311	55	275	
BX 225SAK	60 55(1)	140 110(1)		64 59(1)	18 16(1)	286	356	23	351	435		149	225	460	1065	925	1180	348			48	308	
BX 225SBK																							
BX 250MAK	65 55(1)			69 59(1)		311	406		392	480	24	168	250	510	1070	930	1240	376				313	
BX 280SAK	75 65(1)	140 140(1)	M20 M20(1)	79.5 69(1)	20 18(1)	368	457	31	506	530		190	280	564	1284	1144	1379	482	434	306	43	500	
BX 280SBK																							
BX 315SAK	80 75(1)	170 140(1)		85 79.5(1)	22 20(1)	406	508	40	558	590	28	216	315	639	1493	1323	1643	537	473	347	42		
BX 315SBK															1530	1360	1680						
BX 315SCK															1604	1434	1791						
BX 355SAK	100 90(1)	210 170(1)	M24 M24(1)	106 95(1)	28 25(1)	500	610	45	722	700	35	254	355	725	1722	1512	1902	603	694	413	50	—	
BX 355MAK																							
BX 355MBK																							
BX 355MCK															1827	1617	2082						

N.B.: 1) These values refer to the rear shaft end (PS). 2) “ES” hexagon is not present with PS option

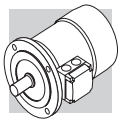

BX - IM B5 - FD - CUS/NBR

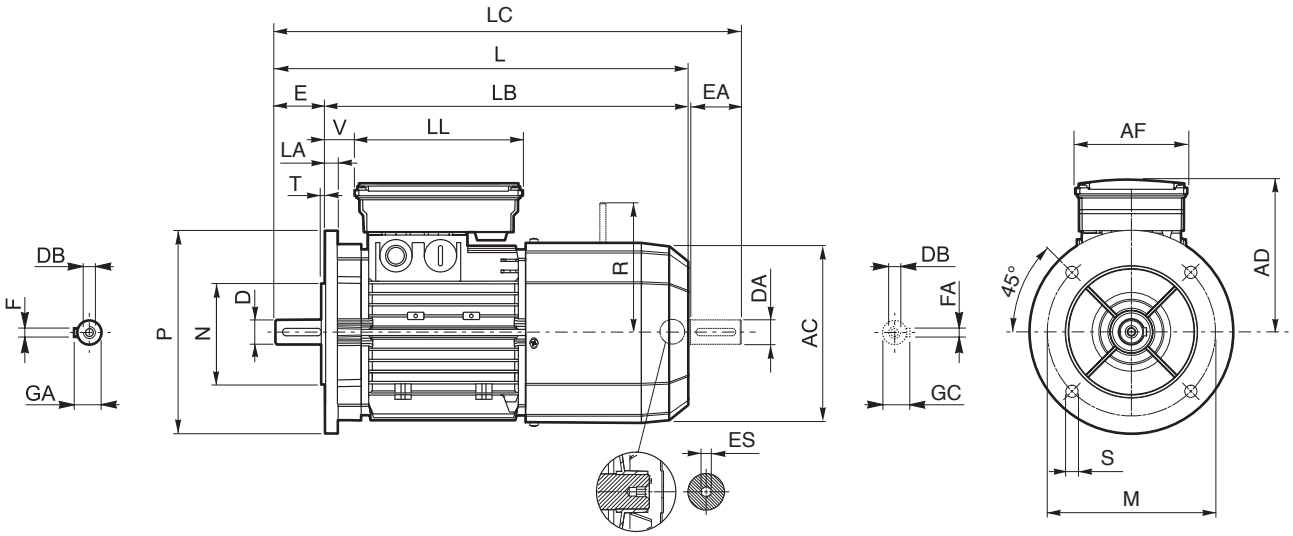

	Shaft					Flange						Motor									
	D DA	E EA	DB	GA GC	F FA	M	N	P	S	T	LA	AC	L	LB	LC	AD	AF	LL	V	R FD	ES (2)
BX 90 SR	19 19(1)	40 40(1)	M6 M6(1)	21.5 21.5(1)	6 6(1)	165	130	200	11.5	3.5	11.5	176	400	360	442	146	110	165	32	129	6
BX 90 S	24 19(1)	50 40(1)	M8 M6(1)	27 21.5(1)	8 6(1)								410		452						
BX 90 LA																				160	
BX 100 LA	28 24(1)	60 50(1)	M10 M8(1)	31 27(1)	8 8(1)	215	180	250	14	4	14	195	502	442	554	155			37		
BX 100 LB																					
BX 112 M											15	219	527	467	579	170			39	199	
BX 132 SB	38 28(1)	80 60(1)	M12 M10(1)	41 31(1)	10 8(1)	265	230	300			16	258	661	581	724	210	140	188	46	204	
BX 132 MA																					
BX 160 MA	42 38(1)	110 80(1)	M16 M12(1)	45 41(1)	12 10(1)	300	250	350	18.5	5	15	310	736	626	820	245	187	187	51	266	—
BX 160 MB													780	670	864						
BX 160 L																					
BX 180 M	48 42(1)	110 110(1)	M16 M16(1)	51.5 45(1)	14 12(1)						18	348	866	756	981	261			52	305	
BX 180 L																					
BX 200LAK	55 45(1)		M20 M16(1)	59 48.5(1)	16 14(1)	350	300	400	19	5	20	417	967	857	1082	328	300	311	55	275	
BX 225SAK	60 55(1)	140 110(1)	M20 M20(1)	64 59(1)	18 16(1)	400	350	450				460	1065	925	1180	348			48	308	
BX 225SBK																					
BX 250MAK	65 55(1)			69 59(1)		500	450	550			24	510	1070	930	1240	376				313	
BX 280SAK	75 65(1)	140 140(1)		79.5 69(1)	20 18(1)				18		23	564	1284	1144	1379	482	434	306	43	500	
BX 280SBK																					
BX 315SAK	80 75(1)	170 140(1)		85 79.5(1)	22 20(1)	600	550	660	23	6	25	639	1493	1323	1643	537	473	347	42		
BX 315SBK													1530	1360	1680						
BX 315SCK													1604	1434	1791						
BX 355SAK	100 90(1)	210 170(1)	M24 M24(1)	106 95(1)	28 25(1)	740	680	800				725	1722	1512	1902	603	694	413	50	—	
BX 355MAK																					
BX 355MBK																					
BX 355MCK													1827	1617	2082						

N.B.: 1) These values refer to the rear shaft end (PS). 2) “ES” hexagon is not present with PS option

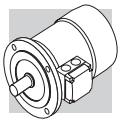

BX - IM B14 - FD - CUS/NBR

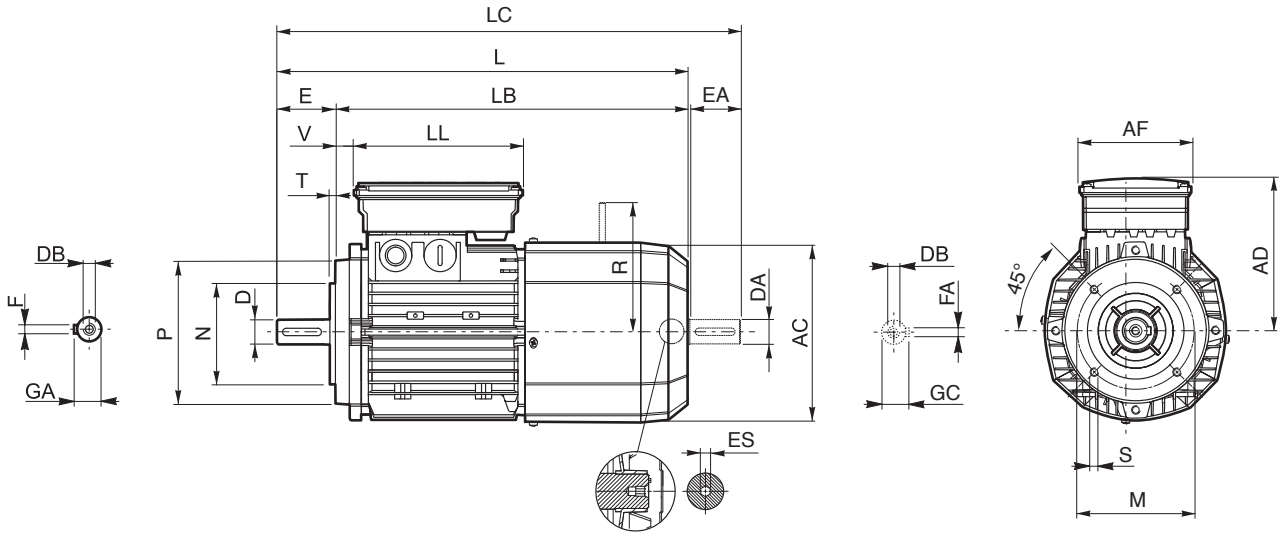

	Shaft					Flange					Motor									
	D DA	E EA	DB	GA GC	F FA	M	N	P	S	T	AC	L	LB	LC	AD	AF	LL	V	R FD	ES (2)
BX 90 SR	19 19(1)	40 40(1)	M6 M6(1)	21.5 21.5(1)	6 6(1)	100	80	120	M6	3	176	400	360	442	146	110	165	32	129	6
BX 90 S	24 19(1)	50 40(1)	M8 M6(1)	27 21.5 (1)	8 6(1)	115	95	140	M8			410		452						
BX 90 LA																			160	
BX 100 LA	28 24(1)	60 50(1)	M10 M8(1)	31 27(1)	8 8(1)	130	110	160		3.5	195	502	442	554	155			37		
BX 100 LB																				
BX 112 M											219	527	467	579	170			39	199	
BX 132 SB	38 28(1)	80 60(1)	M12 M10(1)	41 31(1)	10 8(1)	165	130	200	M10	4	258	661	581	724	210	140	188	46	204	
BX 132 MA																				

N.B.: 1) These values refer to the rear shaft end (PS). 2) “ES” hexagon is not present with PS option

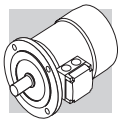

MX

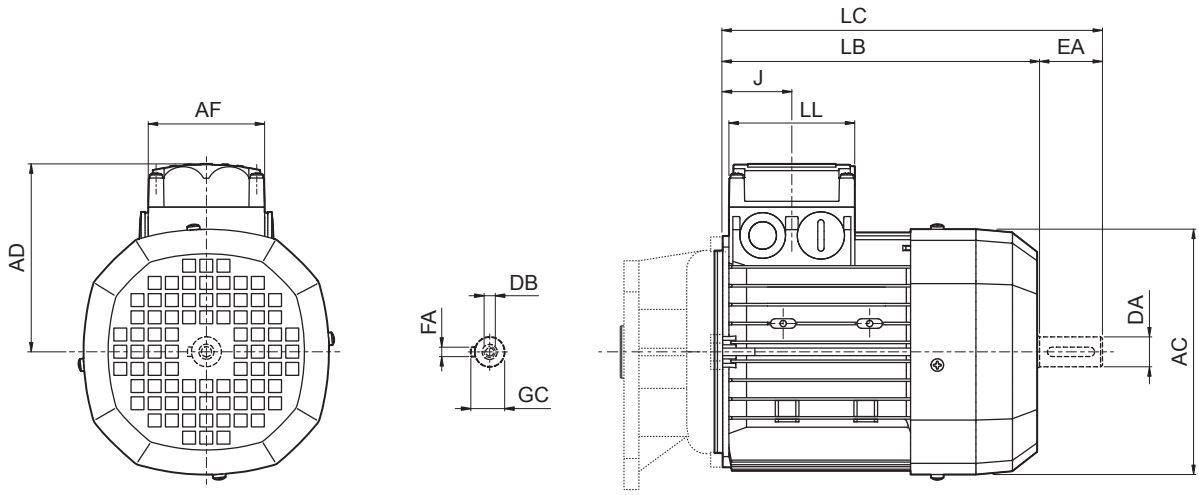

	Rear shaft end					Motor						
	DA	**EA**	**DB**	**GC**	**FA**	**AC**	**LB**	**LC**	**AF**	**LL**	**J**	**AD**
MX 05A	9	20	M3	10	3	121	165	191	74	80	48	95
MX 05B												
MX 1SA	11	23	M4	13	4	138	187	219			45	108
MX 1SB												
MX 2SA	14	30	M5	16	5	156	200	232			44	119
MX 2SB							246	278				
MX 3SA	24	50	M8	27	8	195	265	317	98	98	53.5	142
MX 3SB												
MX 3LA							305	357				
MX 3LB												
MX 4SA	28	60	M10	31		258	361	424	118	118	64.5	193
MX 4SB												
MX 4LA							396	459				
MX 5SA	38	80	M12	41	10	310	418	502	187	187	77	245
MX 5SB							462	546				
MX 5LA												

MX - FD

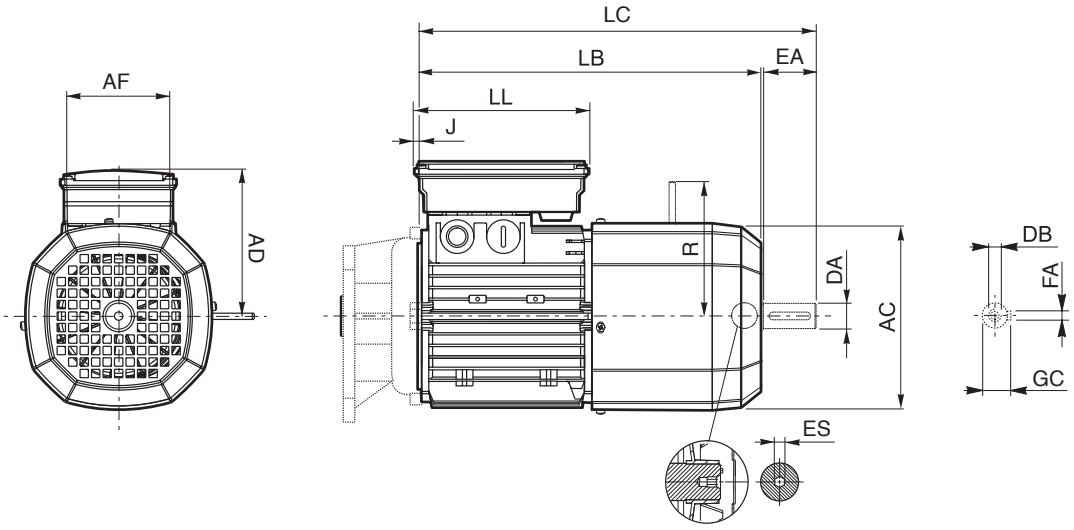

	Rear shaft end					Motor									
	DA	**EA**	**DB**	**GC**	**FA**	**AC**	**LB**	**LC**	**AF**	**LL**	**J**	**AD**	**R**		**ES** [1]
MX 05A	9	20	M3	10	3	121	231	253	98	133	5	122	96	96	5
MX 05B															
MX 1SA	11	23	M4	13	4	138	248	273			8	135	103	103	
MX 1SB															
MX 2SA	14	30	M5	16	5	156	272	303			9	143	129	134	
MX 2SB							318	349							
MX 3SA	24	50	M8	27	8	195	355	407	110	165	7	155	160	160	6
MX 3SB															
MX 3LA							397	450							
MX 3LB															
MX 4SA	28	60	M10	31		258	470	534	140	188		210	204	200	
MX 4SB															
MX 4LA							494	558						226	
MX 5SA	38	80	M12	41	10	310	558	644	187	187	17	245	266	247	—
MX 5SB							602	686							
MX 5LA															

N.B.: 1) “ES” hexagon is not present with PS option

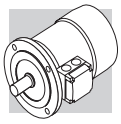

MX CUS/NBR

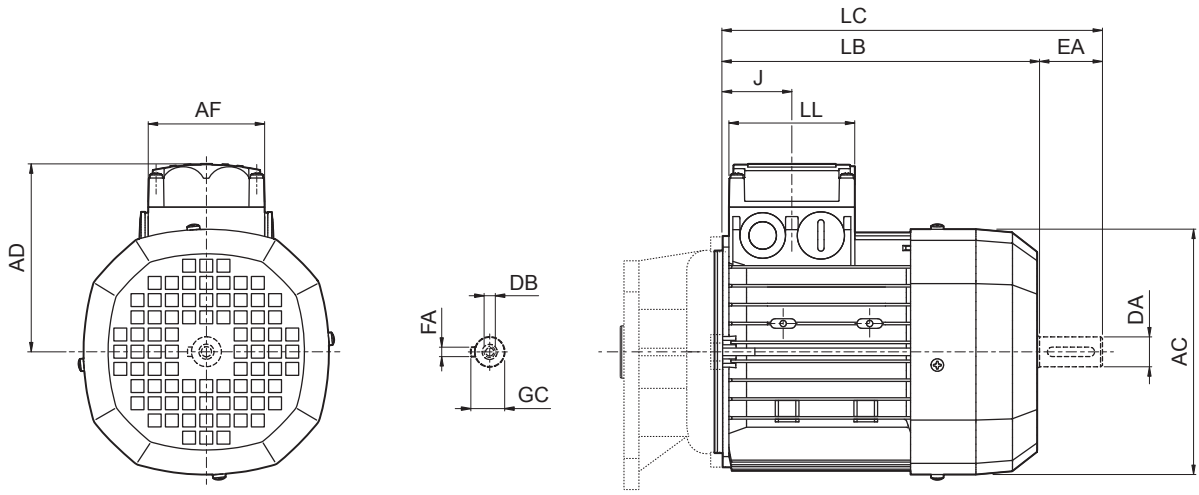

	Rear shaft end					Motor						
	DA	**EA**	**DB**	**GC**	**FA**	**AC**	**LB**	**LC**	**AF**	**LL**	**J**	**AD**
MX 2SB	14	30	M5	16	5	176	262	293	98	98	79	133
MX 3SA	24	50	M8	27	8	195	265	317			53.5	142
MX 3SB												
MX 3LA							305	357				
MX 3LB												
MX 4SA	28	60	M10	31		258	361	424	118	118	64.5	193
MX 4SB							420	483				
MX 4LA												
MX 5SA	38	80	M12	41	10	310	418	502	187	187	77	245
MX 5SB							462	546				
MX 5LA												

MX - FD CUS/NBR

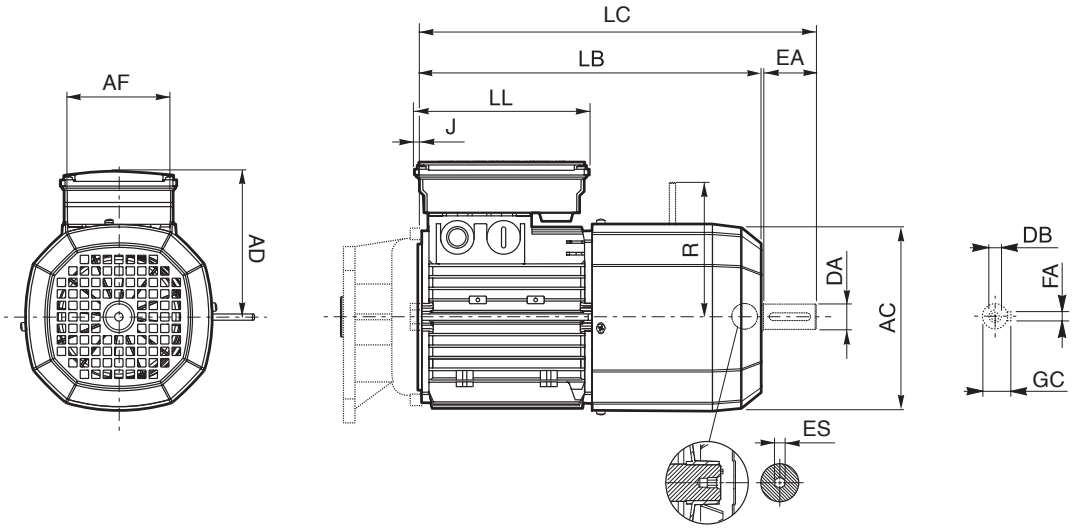

	Rear shaft end					Motor									
	DA	**EA**	**DB**	**GC**	**FA**	**AC**	**LB**	**LC**	**AF**	**LL**	**J**	**AD**	**R**		**ES** [1]
MX 2SB	14	30	M5	16	5	176	347	379	110	165	-17	146	129	134	6
MX 3SA	24	50	M8	27	8	195	355	407			7	155	160	160	
MX 3SB															
MX 3LA							397	450							
MX 3LB															
MX 4SA	28	60	M10	31		258	470	534	140	188		210	204	200	
MX 4SB							528	592							
MX 4LA														226	
MX 5SA	38	80	M12	41	10	310	558	644	187	187	17	245	266	247	—
MX 5SB							602	686							
MX 5LA															

N.B.: 1) “ES” hexagon is not present with PS option

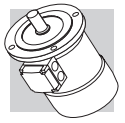

2 P	3000 min^{-1} - S1	50 Hz

																			d.c. brake FD									Standard	CUS variant	BIS variant
P_n			n	M_n		In 400V	η%			cos φ	$\frac{I_s}{I_n}$	$\frac{M_s}{M_n}$	$\frac{M_a}{M_n}$	KVA code	J_m x 10^{-4}		IM B5		Mod	M_b		Z_o 1/h		J_m x 10^{-4}		IM B5		CE	CE + UL	CE + BIS
kW	hp		min^{-1}	Nm	lb·in	A	100%	75%	50%						kgm^2	lb·ft^2	Kg	lbs		Nm	lb·in	NB	SB	kgm^2	lb·ft^2	Kg	lbs			
0.75	1	**BE 80A 2**	2860	2.5	22.1	1.65	80	79.6	76.4	0.83	6.8	3.8	3.5	J	9	0.0214	9.5	20.9	**FD 04**	5	44.2	2300	4300	10.6	0.0252	13.4	30	•	•	•
1.1	1.5	**BE 80B 2**	2845	3.7	32.7	2.35	81.5	82.2	79.9	0.83	6.9	3.8	3.1	J	11.4	0.0271	11.3	24.9	**FD 04**	10	88.5	1500	3100	13	0.0308	15.2	34	•	•	•
1.5	2	**BE 90SA 2**	2865	5	44.3	3.2	81.3	80.7	78.1	0.82	6.8	3.6	2.8	J	12.5	0.0297	12.3	27.1	**FD 14**	15	132	1000	2400	14.1	0.0335	16.5	36	•	•	•
2.2	3	**BE 90L 2**	2870	7.3	64.6	4.7	83.2	83.1	80.8	0.82	6.9	3.1	2.9	J	16.7	0.0396	14	30.9	**FD 05**	26	230	1000	2400	20.7	0.0491	20	44	•	•	•
3	4	**BE 100L 2**	2880	9.9	87.6	6.2	84.6	84.6	83.7	0.83	7.3	3.5	3.1	J	39	0.0925	23	50.7	**FD 15**	26	230	800	1800	43	0.1020	29	64	•	•	•
3.7	5	**BE 112M 2**	2930	12.1	107	7.8	85.5	83	81.2	0.79	7.9	3.5	3.1	J	57	0.1353	28	61.7	**FD 06S**	40	354	—	1100	66	0.1566	39	86		•	•
4	5.4	**BE 112M 2**	2920	13.1	116	8.2	85.8	85.5	84.3	0.82	7.9	3.5	3.1	K	57	0.1353	28	61.7	**FD 06S**	40	354	—	1000	66	0.1566	39	86	•		
5.5	7.5	**BE 132SA 2**	2925	18	159	10.6	87	85	81.7	0.86	8.5	3.6	3.3	K	145	0.3441	42	92.6	**FD 06**	50	443	—	640	156	0.3702	55	121	•	•	•
7.5	10	**BE 132SB 2**	2935	24	212	14.3	88.1	87.4	84.7	0.86	8.8	3.9	3.6	K	178	0.4224	53	117	**FD 06**	50	443	—	700	189	0.4485	66	146	•	•	•
9.2	12.5	**BE 132MB 2**	2920	30	266	16.4	88.8	86.5	84.2	0.91	8.4	3.7	3.3	J	210	0.4983	65	143	**FD 56**	75	664	—	530	221	0.5244	78	172	•	•	
11	15	**BE 160MA 2**	2940	36	319	20	89.4	89.5	88	0.89	8.1	3	2.9	J	340	0.8068	84	185	—	—	—	—	—	—	—	—	—	•	•	
15	20	**BE 160MB 2**	2950	49	434	27.2	90.5	90.5	89.5	0.88	8.5	3	2.8	K	420	0.9967	97	214	—	—	—	—	—	—	—	—	—	•	•	
18.5	25	**BE 160L 2**	2945	60	531	32	90.9	90.5	89.8	0.91	7.7	2.9	2.7	H	490	1.1628	109	240	—	—	—	—	—	—	—	—	—	•	•	

4 P	1500 min^{-1} - S1	50 Hz

																			d.c. brake FD									Standard	CUS variant	BIS variant
P_n			n	M_n		In 400V	η%			cos φ	$\frac{I_s}{I_n}$	$\frac{M_s}{M_n}$	$\frac{M_a}{M_n}$	KVA code	J_m x 10^{-4}		IM B5		Mod	M_b		Z_o 1/h		J_m x 10^{-4}		IM B5		CE	CE + UL	CE + BIS
kW	hp		min^{-1}	Nm	lb·in	A	100%	75%	50%						kgm^2	lb·ft^2	Kg	lbs		Nm	lb·in	NB	SB	kgm^2	lb·ft^2	Kg	lbs			
0.12	0.16	**BE 63A 4**	1360	0.84	7.4	0.45	59.1	59.6	53.5	0.65	3	2	2.2	G	2.3	0.0055	3.9	8.6	**FD 02**	1.75	15.5	11000	14000	2.9	0.0069	5.6	12	•	•	•
0.18	0.25	**BE 63B 4**	1370	1.25	11.1	0.64	64.7	65.1	59.8	0.62	3.5	2.3	2.5	G	3.3	0.0078	5.1	11.2	**FD 02**	3.5	31.0	9000	12000	3.9	0.0093	6.8	15	•	•	•
0.25	0.33	**BE 71A 4**	1380	1.73	15.3	0.68	68.5	68	62	0.78	4	2.3	2.5	H	5.8	0.0138	5.1	11.2	**FD 03**	3.5	31.0	11000	16000	6.9	0.0164	7.8	17	•	•	•
0.37	0.5	**BE 71B 4**	1385	2.55	22.6	1.05	72.7	69.3	64.2	0.75	4.0	2.3	2.2	G	6.9	0.0164	5.9	13.0	**FD 03**	5	44.3	6800	11000	8	0.0190	8.6	19	•	•	•
0.55	0.75	**BE 80A 4**	1430	3.7	32.7	1.38	77.1	73.4	68	0.77	6	2.2	1.9	L	19	0.0451	9.9	21.8	**FD 04**	10	89	4000	7700	20.6	0.0489	13.8	30	•	•	•
0.75	1	**BE 80B 4**	1430	5	44.3	1.65	81	80.5	78	0.81	6.1	3.2	3	H	28	0.0664	12.2	26.9	**FD 04**	15	133	3600	6800	29.6	0.0702	16.1	36	•	•	•
1.1	1.5	**BE 90S 4**	1430	7.4	65.5	2.53	82.5	82	79.5	0.76	6.3	2.9	2.8	J	28	0.0664	13.6	30.0	**FD 14**	15	133	4600	7700	29.6	0.0702	17.8	39	•	•	•
1.5	2	**BE 90LA 4**	1430	10	88.5	3.5	83.5	83	80	0.74	5.9	3.1	3	J	34	0.0807	15.1	33.3	**FD 05**	26	230	3500	6200	38	0.0902	21	47	•	•	•
2.2	3	**BE 100LA 4**	1430	14.7	130	4.9	85.4	85	84	0.76	5.8	3	2.8	H	54	0.1281	22	48.5	**FD 15**	40	354	2700	4700	58	0.1376	29	64	•	•	•
3	4	**BE 100LB 4**	1420	20	177	6.6	85.5	86	85.5	0.77	5.9	2.8	2.6	H	61	0.1448	24	52.9	**FD 15**	40	354	2500	4600	65	0.1542	31	68	•	•	•
3.7	5	**BE 112M 4**	1445	27	239	8.2	86.3	87	84.3	0.76	6.5	2.8	2.8	K	105	0.2492	32	70.5	**FD 06S**	60	531	—	1500	114	0.2705	42	93		•	•
4	5.4	**BE 112M 4**	1440	27	239	8.3	86.6	87	86	0.8	6.5	2.8	2.8	H	105	0.2492	32	70.5	**FD 06S**	60	531	—	1500	114	0.2705	42	93	•		
5.5	7.5	**BE 132S 4**	1460	36	319	11.1	88.5	88.5	87.5	0.81	7.3	2.9	2.9	J	270	0.6407	53	117.0	**FD 56**	75	664	—	1100	281	0.6668	66	146	•	•	•
7.5	10	**BE 132MA 4**	1460	49	434	14.8	89	89	88.5	0.82	6.9	2.9	2.8	H	319	0.7570	59	130.0	**FD 06**	100	885	—	920	330	0.7831	72	159	•	•	•
9.2	12.5	**BE 132MB 4**	1460	60	531	18.1	89.5	89.5	88.5	0.82	6.9	2.9	3	H	360	0.8543	70	154.0	**FD 07**	150	1328	—	950	382	0.9065	86	190	•	•	
11	15	**BE 160M 4**	1465	72	637	21.5	91	91.3	90.5	0.81	6.5	2.8	2.6	H	650	1.5425	99	218.0	**FD 08**	170	1505	—	770	725	1.7205	129	284	•	•	
15	20	**BE 160L 4**	1465	98	867	28.7	90.8	91	90.5	0.83	6.5	2.6	2.3	H	790	1.8747	115	254.0	**FD 08**	200	1770	—	690	865	2.0527	145	320	•	•	
18.5	25	**BE 180M 4**	1465	121	1071	35	91.6	92	91.3	0.83	6.5	2.6	2.5	H	1250	2.9662	135	298.0	**FD 09**	300	2655	—	700	1450	3.4409	175	386	•	•	
22	30	**BE 180L 4**	1465	143	1266	41	91.6	91.8	91.4	0.84	6.8	2.7	2.6	H	1650	3.9155	157	346.0	**FD 09**	300	2655	—	—	1850	4.3901	197	434	•	•	

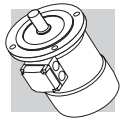

6 P	1000 min^{-1} - S1	50 Hz

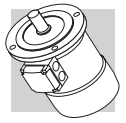

																			d.c. brake FD								Standard	CUS variant	BIS variant
P_n			n	M_n		In 400V	η%			cos φ	$\frac{I_s}{I_n}$	$\frac{M_s}{M_n}$	$\frac{M_a}{M_n}$	KVA code	J_m x 10^{-4}		IM B5		Mod	M_b		Z_o 1/h		J_m x 10^{-4}		IM B5		CE	CE + UL	CE + BIS
kW	hp		min^{-1}	Nm	lb·in	A	100%	75%	50%						kgm^2	lb·ft^2	Kg	lbs		Nm	lb·in	NB	SB	kgm^2	lb·ft^2	Kg	lbs			
0.75	1	**BE 90S 6**	935	7.7	68.2	2.06	75.9	75.9	73	0.69	5.1	3.1	2.9	J	33	0.0783	15	33.1	**FD 14**	15	133	3600	6800	34.6	0.0821	19.2	42	•	•	•
1.1	1.5	**BE 100M 6**	945	11.1	98.2	2.75	78.1	76.2	73	0.74	4.9	2.2	1.9	G	82	0.1946	22	48.5	**FD 15**	26	230	1100	2000	86	0.2041	30	66	•	•	•
1.5	2	**BE 100LA 6**	945	15.2	135	3.9	79.8	77.5	74	0.72	5.6	2.5	2.3	J	95	0.2254	24	52.9	**FD 15**	40	354	1900	4100	99	0.2349	30	66	•	•	•
2.2	3	**BE 112M 6**	950	22	195	5.2	81.8	81.8	79.3	0.74	5.2	2.6	2.3	G	168	0.3987	32	70.5	**FD 06S**	60	531	—	2400	177	0.4200	43	95	•	•	•
3	4	**BE 132S 6**	955	30	266	6.6	83.3	83.3	82.4	0.79	6.1	2.1	1.9	H	295	0.7000	44	97.0	**FD 56**	75	664	—	1400	306	0.7261	57	126	•	•	•
3.7	5	**BE 132MA 6**	970	36.1	320	8.3	84.3	83.6	81.3	0.76	6.9	2.1	2	J	383	0.9089	44	97	**FD 06**	100	885	—	1100	394	0.9350	69	152		•	•
4	5.4	**BE 132MA 6**	965	40	354	8.7	84.9	85	83.1	0.79	6.9	2.2	2	J	383	0.9089	56	123	**FD 06**	100	885	—	1000	394	0.9350	69	152	•		
5.5	7.5	**BE 160MA 6**	965	54	478	11.6	87	87	86.4	0.79	6.6	2.5	2.3	H	740	1.7560	83	183	**FD 08**	170	1505	—	610	815	1.9340	113	249	•	•	
7.5	10	**BE 160MB 6**	965	74	655	15	88	88	87.2	0.82	6.6	2.3	2.1	H	970	2.3018	103	227	**FD 08**	170	1505	—	730	1045	2.4798	133	293	•	•	

4 P	1800 min^{-1} - S1	60 Hz

																			d.c. brake FD								Standard	CUS variant
P_n			n	M_n		In 400V	η%			cos φ	$\frac{I_s}{I_n}$	$\frac{M_s}{M_n}$	$\frac{M_a}{M_n}$	KVA code	J_m x 10^{-4}		IM B5		Mod	M_b		Z_o 1/h		J_m x 10^{-4}		IM B5		CE	CE + UL
kW	hp		min^{-1}	Nm		A	100%	75%	50%						kgm^2	lb·ft^2	Kg	lbs		Nm	lb·in	NB	SB	kgm^2	lb·ft^2	Kg	lbs		
0.12	0.16	**BE63A**	**4**	1700	0.67	5.9	0.41	64.8	62	55	0.61	4	3.4	2.8	J	2.3	0.0055	3.9	8.6	**FD 02**	1.75	15.5	7800	10000	2.9	0.0069	5.6	12	•	•
0.18	0.25	**BE63B**	**4**	1700	1	8.9	0.58	68	67.9	61.2	0.59	4.2	4	3.1	J	3.3	0.0078	5.1	11.2	**FD 02**	3.5	31.0	6500	8400	3.9	0.0093	6.8	15	•	•
0.25	0.33	**BE71A**	**4**	1700	1.4	12.4	1.04	70	68.3	61.6	0.74	5	3.1	3.4	K	5.8	0.0138	5.1	11.2	**FD 03**	3.5	31.0	9900	14000	6.9	0.0164	7.8	17	•	•
0.37	0.5	**BE71B**	**4**	1715	2.06	18.2	0.93	72	71.7	66.3	0.74	5	3	3.2	J	6.9	0.0164	5.9	13.0	**FD 03**	5	44.3	6300	9900	8	0.0190	8.6	19	•	•
0.55	0.75	**BE 80A**	**4**	1740	3	26.6	1.23	75.5	73.1	66.8	0.74	8.7	3.8	3.0	N	19	0.0451	9.9	21.8	**FD 04**	10	88.5	3300	6800	20.6	0.0489	13.8	30	•	•
0.75	1	**BE 80B**	**4**	1745	4.1	36.3	1.46	82.5	81.1	77.6	0.78	7.6	3.5	3.2	K	28	0.0664	12.2	26.9	**FD 04**	15	133	2300	4600	29.6	0.0702	16.1	36	•	•
1.1	1.5	**BE 90S**	**4**	1740	6	53.1	2.25	84	82.7	79	0.73	7.7	3.5	3.2	L	28	0.0664	13.6	30.0	**FD 14**	15	133	2700	6200	29.6	0.0702	17.8	39	•	•
1.5	2	**BE 90LA**	**4**	1740	8.2	72.6	3.1	84.5	83.9	80.7	0.73	7.1	3.6	3.4	K	34	0.0807	15.1	33.3	**FD 05**	26	230	2100	4500	38	0.0902	21	47	•	•
2.2	3	**BE 100LA**	**4**	1745	12	106	4.2	87.5	85.5	83.2	0.76	7	3.3	2.9	J	54	0.1281	22	48.5	**FD 15**	40	354	890	2400	58	0.1376	29	64	•	•
3	4	**BE 100LB**	**4**	1735	16.5	146	5.9	87.5	87.7	86.3	0.76	7	3.2	2.9	K	61	0.1448	24	52.9	**FD 15**	40	354	—	1000	65	0.1542	31	68	•	•
3.7	5	**BE 112M**	**4**	1750	20	177	6.6	87.5	87.5	86.1	0.8	7.8	3.3	3.2	K	105	0.2492	32	70.5	**FD 06S**	60	531	—	730	114	0.2705	42	93		•
4	5.4	**BE 112M**	**4**	1745	21.9	194	7.1	87.5	88	86.7	0.8	7.3	3.0	3.2	J	105	0.2492	32	70.5	**FD 06S**	61	540	—	730	114	0.2705	43	95	•	
5.5	7.5	**BE 132S**	**4**	1760	30	266	9.3	89.5	89.5	87.7	0.83	8.7	3.5	3.5	K	270	0.6407	53	117	**FD 56**	75	664	—	880	281	0.6668	66	146	•	•
7.5	10	**BE 132MA**	**4**	1760	43	381	12.7	89.5	89.5	87.9	0.83	8	3.4	3.3	K	319	0.7570	59	130	**FD 06**	100	885	—	700	330	0.7831	72	159	•	•
9.2	12.5	**BE 132MB**	**4**	1760	50	443	15.6	90	90	88.6	0.82	8.3	3.5	3.6	K	360	0.8543	70	154	**FD 07**	150	1328	—	590	382	0.9065	86	190	•	•
11	15	**BE 160M**	**4**	1765	60	531	18.7	91	91	90	0.81	7.7	2.9	2.8	J	650	1.5425	99	218	**FD 08**	170	1505	—	370	725	1.7205	129	284	•	•
15	20	**BE 160L**	**4**	1770	81	717	25.5	91	90.5	89.5	0.81	7.1	3.1	2.7	J	790	1.8747	115	254	**FD 08**	200	1770	—	320	865	2.0527	145	320	•	•
18.5	25	**BE 180M**	**4**	1765	100	885	30.3	92.4	91.9	90.5	0.83	7.3	2.7	2.5	H	1250	2.9663	135	298	**FD 09**	300	2655	—	200	1450	3.4409	175	386	•	•
22	30	**BE 180L**	**4**	1770	119	1053	36	92.4	92.5	92.2	0.83	8.1	3.3	3.2	J	1650	3.9155	157	346	**FD 09**	300	2655	—	150	1850	4.3901	197	434	•	•

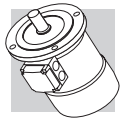

2 P	3000 min^{-1} - S1	50 Hz

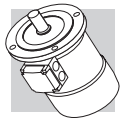

																		d.c. brake FD									Standard	CUS variant
P_n			n	M_n		In 400V	η%			cos φ	$\frac{I_s}{I_n}$	$\frac{M_s}{M_n}$	$\frac{M_a}{M_n}$	KVA code	J_m x 10^{-4}		IM B5		Mod	M_b		Z_o 1/h		J_m x 10^{-4}		IM B5		CE	CE + UL
kW	hp		min^{-1}	Nm	lb·in	A	100%	75%	50%						kgm^2	lb·ft^2	Kg	lbs		Nm	lb·in	NB	SB	kgm^2	lb·ft^2	Kg	lbs		
0.75	1	**ME 2SA**	**2**	2860	2.5	22.1	1.63	80	79.6	76.4	0.83	6.8	3.8	3.5	J	9	0.0214	8.8	19.4	**FD 04**	5	44.3	2300	4300	10.6	0.0252	12.7	28	•	•
1.1	1.5	**ME 2SB**	**2**	2845	3.7	32.7	2.35	81.5	82.2	79.9	0.83	6.9	3.8	3.1	J	11.4	0.0271	10.6	23.4	**FD 04**	10	88.5	1500	3100	13	0.0308	14.5	32	•	•
1.5	2	**ME 3SA**	**2**	2845	5.0	44.3	3.2	81.3	79	76	0.84	6.1	2.9	2.7	H	24	0.0570	15.5	34.2	**FD 15**	13	115	470	1200	28	0.0664	22	49	•	•
2.2	3	**ME 3LA**	**2**	2895	7.3	64.6	4.8	83.2	83.1	80.8	0.8	6.3	2.7	2.5	H	31	0.0736	18.7	41.2	**FD 15**	26	230	500	1200	35	0.0831	25	56	•	•
3	4	**ME 3LB**	**2**	2880	9.9	87.6	6.2	84.6	84.6	83.7	0.83	7.3	3.5	3.1	J	39	0.0925	22	48.5	**FD 15**	26	230	800	1800	43	0.1020	28	63	•	•
3.7	5	**ME 4SA**	**2**	2930	12.1	107	7.8	84.7	83	81.2	0.79	7.9	2.9	2.8	J	101	0.2397	33	72.8	**FD 06**	50	443	—	630	112	0.2658	46	101		•
4	5.4	**ME 4SA**	**2**	2900	13.2	117	7.8	85.8	84.5	82.2	0.87	7.0	2.9	2.8	H	101	0.2397	33	72.8	**FD 06**	50	443	—	580	112	0.2658	46	101	•	
5.5	7.5	**ME 4SB**	**2**	2925	18.0	159	10.6	87.0	85.0	81.7	0.86	8.5	3.6	3.3	K	145	0.3441	40	88.2	**FD 06**	50	443	—	640	156	0.3702	53	117	•	•
7.5	10	**ME 4LA**	**2**	2935	24	212	14.3	88.1	87.4	84.7	0.86	8.8	3.9	3.6	K	178	0.4224	51	112	**FD 06**	50	443	—	700	189	0.4485	64	141	•	•
9.2	12.5	**ME 4LB**	**2**	2920	30	266	16.4	88.8	86.5	84.2	0.91	8.4	3.7	3.3	J	210	0.4983	60	132	**FD 56**	75	664	—	530	221	0.5244	73	161	•	•
11	15	**ME 5SA**	**2**	2940	36	319	20.0	89.4	89.5	88.0	0.89	8.1	3.0	2.9	J	340	0.8068	70	154										•	•
15	20	**ME 5SB**	**2**	2950	49	434	27.2	90.5	90.5	89.5	0.88	8.5	3.0	2.8	K	420	0.9967	83	183										•	•
18.5	25	**ME 5LA**	**2**	2945	60	531	32	90.9	90.5	89.8	0.91	7.7	2.9	2.7	H	490	1.1628	95	209										•	•

4 P	1500 min^{-1} - S1	50 Hz

																			d.c. brake FD								Standard	CUS variant
P_n			n	M_n		In 400V	η%			cos φ	I_s/I_n	M_s/M_n	M_a/M_n	KVA code	J_m x 10^{-4}		IM B5		Mod	M_b		Z_o 1/h		J_m x 10^{-4}		IM B5		CE	CE + UL
kW	hp		min^{-1}	Nm	lb·in	A	100%	75%	50%						kgm^2	$lb·ft^2$	Kg	lbs		Nm	lb·in	NB	SB	kgm^2	$lb·ft^2$	Kg	lbs		
0.12	0.16	**ME 05A**	**4**	1360	0.84	7.4	0.45	59.1	59.6	53.5	0.65	3	2	2.2	G	2.3	0.0055	3.6	7.9	**FD 02**	1.75	15.5	11000	14000	2.9	0.0069	5.3	12	•	•
0.18	0.25	**ME 05B**	**4**	1370	1.25	11.1	0.64	64.7	65.1	59.8	0.62	3.5	2.3	2.5	G	3.3	0.0078	4.8	10.6	**FD 02**	3.5	31.0	9000	12000	3.9	0.0093	6.5	14	•	•
0.25	0.33	**ME 1SA**	**4**	1380	1.73	15.3	0.68	68.5	68	62	0.78	4	2.3	2.5	H	5.8	0.0138	4.8	10.6	**FD 03**	3.5	31.0	11000	16000	6.9	0.0164	7.5	17	•	•
0.37	0.5	**ME 1SB**	**4**	1385	2.55	22.6	1.05	72.7	69.3	64.2	0.75	4.0	2.3	2.2	G	6.9	0.0164	5.5	12.1	**FD 03**	5	44.3	6800	11000	8	0.0190	8.2	18	•	•
0.55	0.75	**ME 2SA**	**4**	1430	3.7	32.7	1.38	77.1	73.4	68	0.77	6	2.2	1.9	L	19	0.0451	9.9	21.8	**FD 04**	10	88.5	4000	7700	20.6	0.0489	13.8	30	•	•
0.75	1	**ME 2SB**	**4**	1430	5	44.3	1.65	81	80.5	78	0.81	6.1	3.2	3.0	H	28	0.0664	12.2	26.9	**FD 04**	15	133	3600	6800	29.6	0.0702	16.1	36	•	•
1.1	1.5	**ME 3SA**	**4**	1430	7.4	65.5	2.6	82.5	82.0	79.0	0.74	5.5	2.5	2.8	H	34	0.0807	15.5	34.2	**FD 15**	26	230	2700	4700	38	0.0902	22	47	•	•
1.5	2	**ME 3SB**	**4**	1420	10	88.5	3.48	84.0	84.0	83.0	0.74	5.9	2.9	2.9	J	40	0.0949	17	37.5	**FD 15**	26	230	2600	4700	44	0.1044	23	51	•	•
2.2	3	**ME 3LA**	**4**	1430	14.7	130	4.89	85.4	85	84	0.76	5.8	3	2.8	H	54	0.1281	21	46.3	**FD 15**	40	354	2700	4700	58	0.1376	27	60	•	•
3	4	**ME 3LB**	**4**	1420	20	177	6.58	85.5	86.0	85.5	0.77	5.9	2.8	2.6	H	61	0.1448	23	50.7	**FD 15**	40	354	2500	4600	65	0.1542	29	64	•	•
3.7	5	**ME 4SA**	**4**	1460	27	239	7.5	86.6	87.1	85.6	0.82	7.1	3	3.1	K	213	0.5055	42	92.6	**FD 56**	75	664	—	1100	224	0.5316	55	121		•
4	5.4	**ME 4SA**	**4**	1440	27	239	8.25	87.5	86.8	84.0	0.8	7.1	3	3.1	J	213	0.5055	42	92.6	**FD 56**	75	664	—	1100	224	0.5316	55	121	•	
5.5	7.5	**ME 4SB**	**4**	1460	36	319	11.07	88.5	88.5	87.5	0.81	7.3	2.9	2.9	J	270	0.6407	51	112	**FD 56**	75	664	—	1100	281	0.6668	64	141	•	•
7.5	10	**ME 4LA**	**4**	1460	49	434	14.83	89.0	89.0	88.5	0.82	6.9	2.9	2.8	H	319	0.7570	57	126	**FD 06**	100	885	—	920	330	0.7831	70	154	•	•
9.2	12.5	**ME 4LB**	**4**	1460	60	531	18.09	89.5	89.5	88.5	0.82	6.9	2.9	3.0	H	360	0.8543	65	143	**FD 07**	150	1328	—	950	382	0.9065	81	179	•	
11	15	**ME 5SA**	**4**	1465	72	637	21.54	91.0	91.3	90.5	0.81	6.5	2.8	2.6	H	650	1.5425	85	187	**FD 08**	170	1505	—	770	725	1.7205	115	254	•	
15	20	**ME 5LA**	**4**	1465	98	867	28.73	90.8	91.0	90.5	0.83	6.5	2.6	2.3	H	790	1.8747	101	223	**FD 08**	200	1770	—	690	865	2.0527	131	289	•	

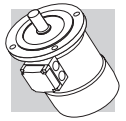

6 P	1000 min^{-1} - S1	50 Hz

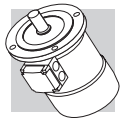

														d.c. brake						a.c. brake				
														FD						FA				
P_n kW		n min^{-1}	M_n Nm	In 400V A	η% 100%	η% 75%	η% 50%	cos φ	$\frac{I_s}{I_n}$	$\frac{M_s}{M_n}$	$\frac{M_a}{M_n}$	J_m x 10^{-4} kgm^2	IM B5 Kg	Mod	M_b Nm	Z_O 1/h NB	Z_O 1/h SB	J_m x 10^{-4} kgm^2	IM B5 Kg	Mod	M_b Nm	Z_O 1/h	J_m x 10^{-4} kgm^2	IM B5 Kg
0.75	**ME 3SA 6**	940	7.6	1.98	75.9	75	70.7	0.72	4.7	2.2	2	33	17	**FD 15**	26	3400	6500	28	21	**FA 15**	26	6500	28	22
1.1	**ME 3LA 6 (*)**	945	11.1	2.75	78.1	76.2	73	0.74	4.9	2.2	1.9	82	21	**FD 15**	26	2700	5000	37	27	**FA 15**	26	5000	37	28
1.5	**ME 3LB 6**	945	15.2	3.8	79.8	77.5	74	0.72	5.6	2.5	2.3	95	23	**FD 15**	40	1900	4100	86	29	**FA 15**	40	4100	86	30
2.2	**ME 4SA 6**	955	22	4.9	81.8	81.8	80	0.8	5.7	1.9	1.7	216	34	**FD 56**	75	—	2100	177	47	**FA 06**	60	2100	177	48
3.7	**ME 4LA 6**	970	36.1	8.3	83.5	83.6	81.3	0.76	6.9	2.2	2	383	54	**FD 06**	100	—	1200	305	70	**FA 06**	100	1200	305	72

4 P	1800 min^{-1} - S1	60 Hz

																			d.c. brake FD								Standard	CUS variant
P_n			n	M_n		In 400V	η%			cos φ	$\frac{I_s}{I_n}$	$\frac{M_s}{M_n}$	$\frac{M_a}{M_n}$	KVA code	J_m x 10^{-4}		IM B5		Mod	M_b		Z_o 1/h		J_m x 10^{-4}		IM B5		CE	CE + UL
kW	hp		min^{-1}	Nm	lb·in	A	100%	75%	50%						kgm^2	lb·ft^2	Kg	lbs		Nm	lb·in	NB	SB	kgm^2	lb·ft^2	Kg	lbs		
0.12	0.16	**ME05A 4**	1700	0.67	5.9	0.41	64.8	62	55	0.61	4	3.4	2.8	J	2.3	0.0055	3.6	7.9	**FD 02**	1.75	15.5	7800	10000	2.9	0.0069	5.3	12	•	•
0.18	0.25	**ME05B 4**	1700	1	8.9	0.58	68	67.9	61.2	0.59	4.2	4	3.1	J	3.3	0.0078	4.8	10.6	**FD 02**	3.5	31.0	6500	8400	3.9	0.0093	6.5	14	•	•
0.25	0.33	**ME1SA 4**	1700	1.4	12.4	1.04	70	68.3	61.6	0.74	5	3.1	3.4	K	5.8	0.0138	4.8	10.6	**FD 03**	3.5	31.0	9900	14000	6.9	0.0164	7.5	17	•	•
0.37	0.5	**ME1SB 4**	1715	2.06	18.2	0.93	72	71.7	66.3	0.74	5	3	3.2	J	6.9	0.0164	5.5	12.1	**FD 03**	5	44.3	6300	9900	8	0.0190	8.2	18	•	•
0.55	0.75	**ME 2SA 4**	1740	3	26.6	1.23	75.5	73.1	66.8	0.74	8.7	3.8	3.0	N	19	0.0451	9.9	21.8	**FD 04**	10	88.5	3300	6800	20.6	0.0489	13.8	30	•	•
0.75	1	**ME 2SB 4**	1745	4.1	36.3	1.46	82.5	81.1	77.6	0.78	7.6	3.5	3.2	K	28	0.0664	12.2	26.9	**FD 04**	15	133	2300	4600	29.6	0.0702	16.1	36	•	•
1.1	1.5	**ME 3SA 4**	1740	6	53.1	2.25	84	82.7	79	0.73	7.7	3.5	3.2	J	34	0.0807	15.5	34.2	**FD 15**	26	230	1700	3400	38	0.0902	22	47	•	•
1.5	2	**ME 3SB 4**	1740	8.2	72.6	3.1	84.5	83.9	80.7	0.73	7.1	3.6	3.4	K	40	0.0949	17	37.5	**FD 15**	26	230	1000	2800	44	0.1044	23	51	•	•
2.2	3	**ME 3LA 4**	1745	12	106	4.2	87.5	85.5	83.2	0.76	7	3.3	2.9	J	54	0.1281	21	46.3	**FD 15**	40	354	890	2400	58	0.1376	27	60	•	•
3	4	**ME 3LB 4**	1735	16.5	146	5.9	87.5	87.7	86.3	0.76	7	3.2	2.9	K	61	0.1448	23	50.7	**FD 15**	40	354	—	1000	65	0.1542	29	64	•	•
3.7	5	**ME 4SA 4**	1750	20	177	6.6	87.5	87.5	86.1	0.8	7.8	3.3	3.2	J	213	0.5055	42	92.6	**FD 56**	75	664	—	880	224	0.5316	55	121		•
4	5.4	**ME 4SA 4**	1790	21.3	189	7.2	87.5	85.5	82.7	0.82	7.2	3.1	3.2	H	213	0.5055	42	92.6	**FD 56**	75	664	—	880	224	0.5316	55	121	•	
5.5	7.5	**ME 4SB 4**	1760	30	266	9.3	89.5	89.5	87.7	0.83	8.7	3.5	3.5	K	270	0.6407	51	112	**FD 56**	75	664	—	880	281	0.6668	64	141	•	•
7.5	10	**ME 4LA 4**	1760	43	381	12.7	89.5	89.5	87.9	0.83	8	3.4	3.3	K	319	0.7570	57	126	**FD 06**	100	885	—	700	330	0.7831	70	154	•	•
9.2	12.5	**ME 4LB 4**	1760	50	443	15.6	90	90	88.6	0.82	8.3	3.5	3.6	K	360	0.8543	65	143	**FD 07**	150	1328	—	590	382	0.9065	81	179	•	•
11	15	**ME 5SA 4**	1765	60	531	18.7	91	91	90	0.81	7.7	2.9	2.8	J	650	1.5425	85	187	**FD 08**	170	1505	—	360	725	1.7205	115	254	•	•
15	20	**ME 5LA 4**	1770	81	717	25.5	91	90.5	89.5	0.81	7.1	3.1	2.7	J	790	1.8747	101	223	**FD 08**	200	1770	—	320	865	2.0527	131	289	•	•

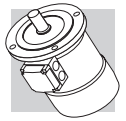

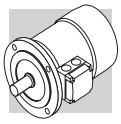

BE - IM B3

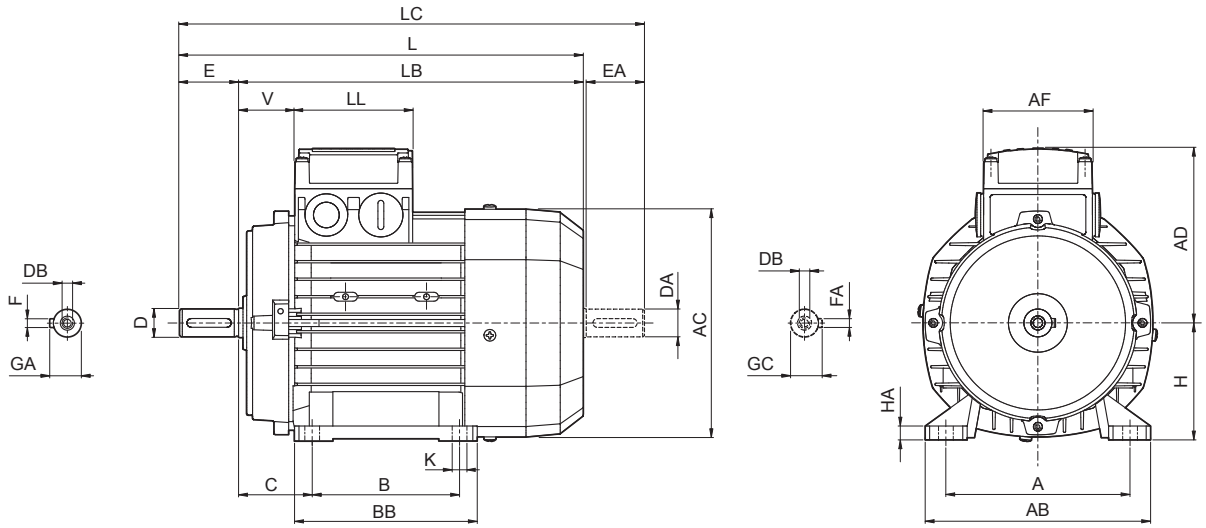

	Shaft					Housing						Motor									
	D DA	E EA	DB	GA GC	F FA	B	A	HA	BB	AB	K	C	H	AC	L	LB	LC	AD	AF	LL	V
BE 63	11	23	M4	12.5	4	80	100	8	96	120	7	40	63	121	207	184	232	95	74	80	26
BE 71	14	30	M5	16	5	90	112		112	135		45	71	138	249	219	281	108			37
BE 80	19	40	M6	21.5	6	100	125		124	153	10	50	80	156	274	234	315	119			38
BE 90 S	24	50	M8	27	8		140		155	174		56	90	176	326	276	378	133	98	98	44
BE 90 L						125															
BE 100	28	60	M10	31		140	160	10	175	192	12	63	100	195	367	307	429	142			50
BE 112							190			224		70	112	219	385	325	448	157			52
BE 132 S	38	80	M12	41	10	178	216	12	218	254		89	132	258	493	413	576	193	118	118	58
BE 132 MA																					
BE 132 MB															528	448	611				
BE 160 M	42 38(1)	110 80(1)	M16 M12(1)	45 41(1)	12 10(1)	210	254	25	264	319	14.5	108	160	310	596	486	680	245	187	187	51
BE 160 L						254			304						640	530	724				
BE 180 M	48 42(1)	110 110(1)	M16 M16(1)	51.5 45(1)	14 12(1)	241	279	26	291	359	14	121	180	348	708	598	823	261			52
BE 180 L						279			329												

N.B.: 1) These values refer to the rear shaft end.

BE - IM B5

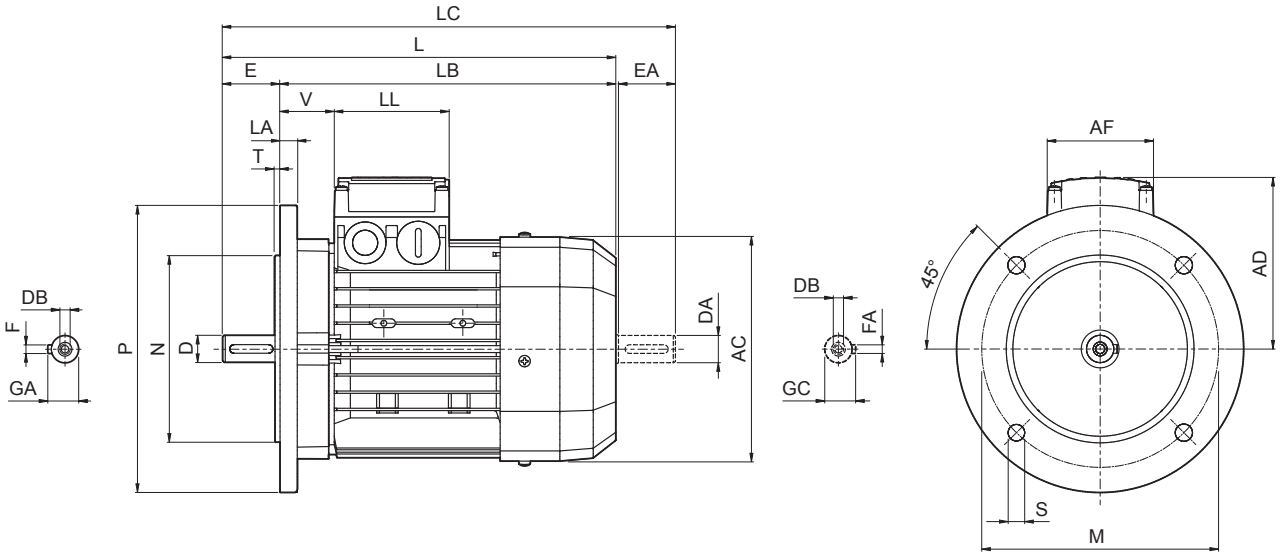

	Shaft					Flange						Motor							
	D DA	**E EA**	**DB**	**GA GC**	**F FA**	**M**	**N**	**P**	**S**	**T**	**LA**	**AC**	**L**	**LB**	**LC**	**AD**	**AF**	**LL**	**V**
BE 63	11	23	M4	12.5	4	115	95	140	9.5	3	10	121	207	184	232	95	74	80	26
BE 71	14	30	M5	16	5	130	110	160		3.5		138	249	219	281	108			37
BE 80	19	40	M6	21.5	6	165	130	200	11.5		11.5	156	274	234	315	119			38
BE 90 S	24	50	M8	27	8							176	326	276	378	133	98	98	44
BE 90 L																			
BE 100	28	60	M10	31		215	180	250	14	4	14	195	367	307	429	142			50
BE 112											15	219	385	325	448	157			52
BE 132 S	38	80	M12	41	10	265	230	300			20	258	493	413	576	193	118	118	58
BE 132 MA																			
BE 132 MB													528	448	611				
BE 160 M	42 38(1)	110 80(1)	M16 M12(1)	45 41(1)	12 10(1)	300	250	350	18.5	5	15	310	596	486	680	245	187	187	51
BE 160 L													640	530	724				
BE 180 M	48 42(1)	110 110(1)	M16 M16(1)	51.5 45(1)	14 12(1)						18	348	708	598	823	261			52
BE 180 L																			

N.B.: 1) These values refer to the rear shaft end.

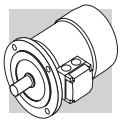

BE - IM B14

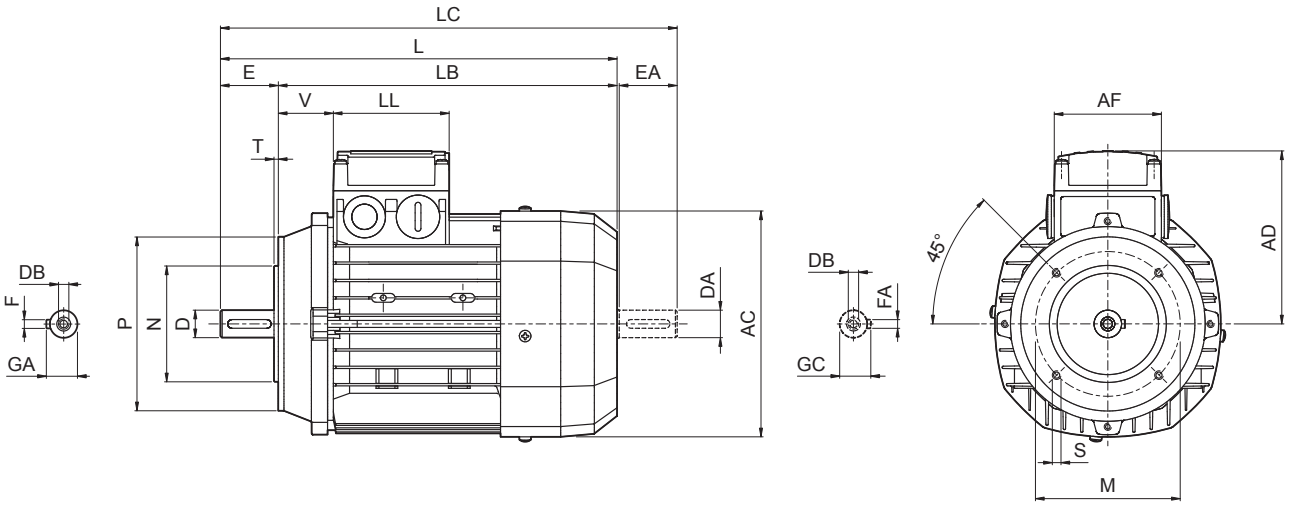

	Shaft					Flange					Motor							
	D DA	**E EA**	**DB**	**GA GC**	**F FA**	**M**	**N**	**P**	**S**	**T**	**AC**	**L**	**LB**	**LC**	**AD**	**AF**	**LL**	**V**
BE 63	11	23	M4	12.5	4	75	60	90	M5	2.5	121	207	184	232	95	74	80	37
BE 71	14	30	M5	16	5	85	70	105	M6	3	138	249	219	281	108			38
BE 80	19	40	M6	21.5	6	100	80	120			156	274	234	315	119			
BE 90 S	24	50	M8	27	8	115	95	140	M8		176	326	276	378	133	98	98	44
BE 90 L																		
BE 100	28	60	M10	31		130	110	160		3.5	195	367	307	429	142			50
BE 112											219	385	325	448	157			52
BE 132 S	38	80	M12	41	10	165	130	200	M10	4	258	493	413	576	193	118	118	58
BE 132 MA																		
BE 132 MB												528	448	611				

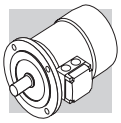

BE - IM B3 - FD

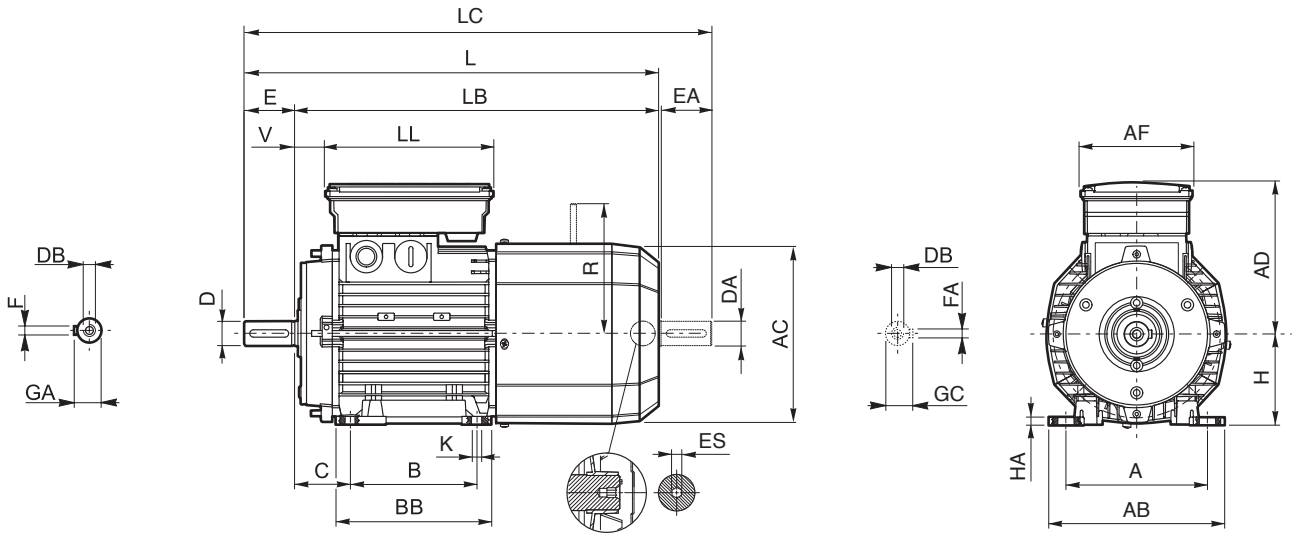

	Shaft					Housing						Motor											
	D DA	E EA	DB	GA GC	F FA	B	A	HA	BB	AB	K	C	H	AC	L	LB	LC	AD	AF	LL	V	R FD	ES (2)
BE 63	11	23	M4	12.5	4	80	100		96	120	7	40	63	121	272	249	297	122			14	96	
BE 71	14	30	M5	16	5	90	112		112	135		45	71	138	313	283	345	135	98	133	24	103	5
BE 80	19	40	M6	21.5	6	100	125	8	124	153	10	50	80	156	348	308	390	143			25	129	
BE 90 S	24	50	M8	27	8		140		155	174		56	90	176	411	361	463	146	110	165	32		6
BE 90 L						125																160	
BE 100	28	60	M10	31		140	160	10	175	192	12	63	100	195	458	398	521	155			37		
BE 112							190			224		70	112	219	484	424	547	170			39	199	
BE 132 S	38	80	M12	41	10	178	216	12	218	254		89	132	258	603	523	686	193	140	188	46	204	
BE 132 MA																							
BE 132 MB															628	548	711					226	—
BE 160 M	42 38(1)	110 80(1)	M16 M12(1)	45 41(1)	12 10(1)	210	254	25	264	319	14.5	108	160	310	736	626	820	245	187	187	51	266	
BE 160 L						254			304						780	670	864						
BE 180 M	48 42(1)	110 110(1)	M16 M16(1)	51.5 45(1)	14 12(1)	241	279	26	291	359	14	121	180	348	866	756	981	261			52	305	
BE 180 L						279			329														

N.B.: 1) These values refer to the rear shaft end (PS). 2) “ES” hexagon is not present with PS option

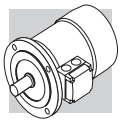

BE - IM B5 - FD

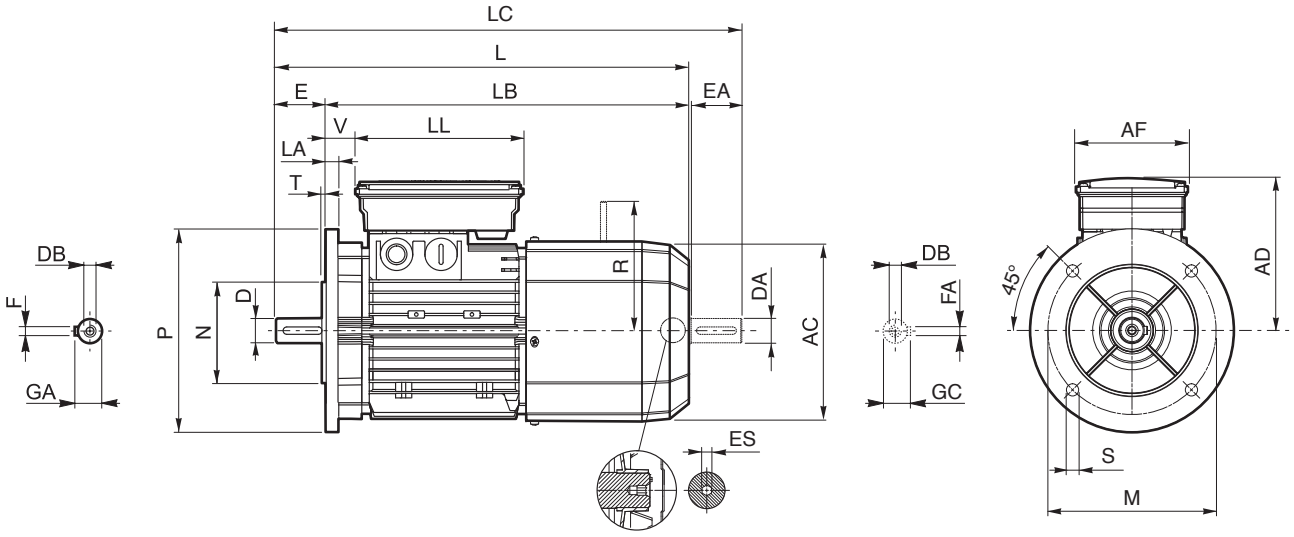

	Shaft					Flange						Motor									
	D DA	E EA	DB	GA GC	F FA	M	N	P	S	T	LA	AC	L	LB	LC	AD	AF	LL	V	R FD	ES (2)
BE 63	11	23	M4	12.5	4	115	95	140	9.5	3	10	121	272	249	297	122	98	133	14	96	5
BE 71	14	30	M5	16	5	130	110	160		3.5		138	313	283	345	135			24	103	
BE 80	19	40	M6	21.5	6	165	130	200	11.5		11.5	156	348	308	390	143			25	129	
BE 90 S	24	50	M8	27	8							176	411	361	463	146	110	165	32		6
BE 90 L																				160	
BE 100	28	60	M10	31		215	180	250	14	4	14	195	458	398	521	155			37		
BE 112											15	219	484	424	547	170			39	199	
BE 132 S	38	80	M12	41	10	265	230	300			20	258	603	523	686	210	140	188	46	204	
BE 132 MA																					
BE 132 MB													628	548	711					226	—
BE 160 M	42 38(1)	110 80(1)	M16 M12(1)	45 41(1)	12 10(1)	300	250	350	18.5	5	15	310	736	626	820	245	187	187	51	266	
BE 160 L													780	670	864						
BE 180 M	48 42(1)	110 110(1)	M16 M16(1)	51.5 45(1)	14 12(1)						18	348	866	756	981	261			52	305	
BE 180 L																					

N.B.: 1) These values refer to the rear shaft end (PS). 2) “ES” hexagon is not present with PS option

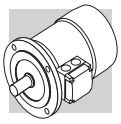

BE - IM B14 - FD

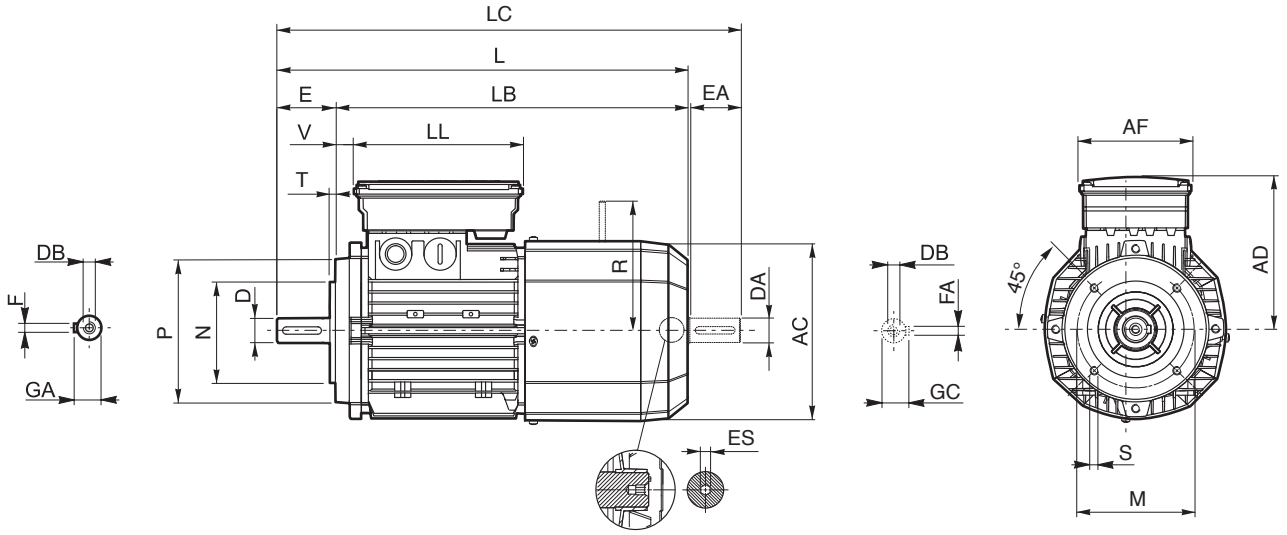

	Shaft					Flange					Motor									
	D DA	E EA	DB	GA GC	F FA	M	N	P	S	T	AC	L	LB	LC	AD	AF	LL	V	R FD	ES (2)
BE 63	11	23	M4	12.5	4	75	60	90	M5	2.5	121	272	249	297	122	98	133	14	96	5
BE 71	14	30	M5	16	5	85	70	105	M6	3	138	313	283	345	135			24	103	
BE 80	19	40	M6	21.5	6	100	80	120			156	348	308	390	143			25	129	
BE 90 S	24	50	M8	27	8	115	95	140	M8		176	411	361	463	146	110	165	32		6
BE 90 L																			160	
BE 100	28	60	M10	31		130	110	160		3.5	195	458	398	521	155			37		
BE 112											219	484	424	547	170			39	199	
BE 132 S	38	80	M12	41	10	165	130	200	M10	4	258	603	523	686	193	140	188	46	204	
BE 132 MA																				
BE 132 MB												628	548	711					226	—

2) “ES” hexagon is not present with PS option

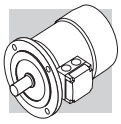

ME

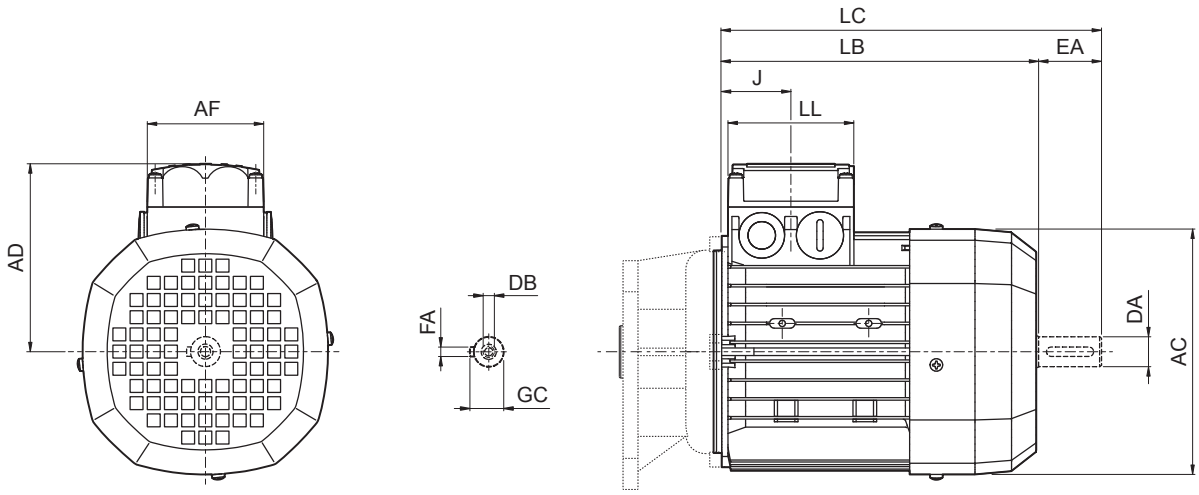

	Rear shaft end					Motor						
	DA	**EA**	**DB**	**FA**	**GC**	**AC**	**LB**	**LC**	**AF**	**LL**	**J**	**AD**
ME 05	11	23	M4	12.5	4	121	165	191	74	80	48	95
ME 1S	14	30	M5	16	5	138	187	219			45	108
ME 2S	19	40	M6	21.5	6	156	202	245			44	119
ME 3S	28	60	M10	31	8	195	230	293	98	98	53.5	142
ME 3L							262	325				
ME 4S	38	80	M12	41	10	258	361	444	118	118	64.5	193
ME 4L												
ME 4LB							396	479				
ME 5S	38	80	M12	41	10	310	418	502	187	187	77	245
ME 5L							462	546				

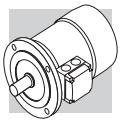

ME - FD

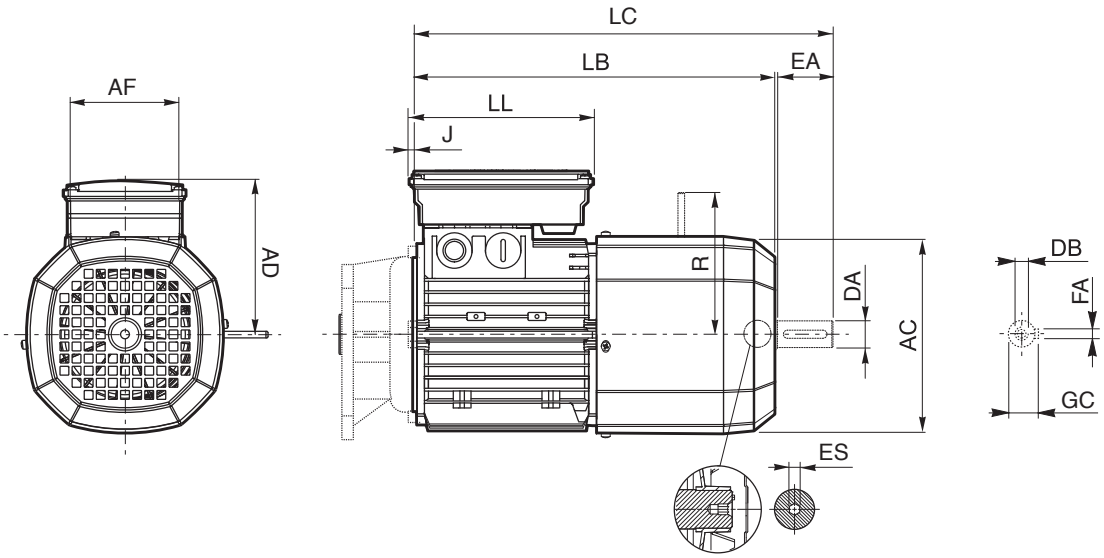

	Rear shaft end					Motor									
	DA	**EA**	**DB**	**GC**	**FA**	**AC**	**LB**	**LC**	**AF**	**LL**	**J**	**AD**	**R**		**ES** [1]
ME 05	11	23	M4	12.5	4	121	231	256	98	133	-4.5	119	96	116	5
ME 1S	14	30	M5	16	5	138	248	280			-8	135	103	124	
ME 2S	19	40	M6	21.5	6	156	272	314			-17	143	129	134	
ME 3S	28	60	M10	31	8	195	326	389	110	165	7	155	160	160	6
ME 3L							353	416							
ME 4S	38	80	M12	41	10	258	470	553	140	188	7	210	204	200	
ME 4LA															
ME 4LB							495	578					226	217	
ME 5S	38	80	M12	41	10	310	558	642	187	187	17	245	266	247	---
ME 5L							602	686							

N.B.: 1) “ES” hexagon is not present with PS option

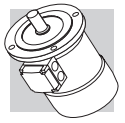

2P	3000 min^{-1} - S1	50 Hz

P_n kW	P_n hp		n min^{-1}	M_n Nm	M_n lb·in	In 400V A	η% 100%	η% 75%	η% 50%	cosφ	$\frac{I_s}{I_n}$	$\frac{M_s}{M_n}$	$\frac{M_a}{M_n}$	KVA code	J_m x 10^{-4} kgm^2	J_m x 10^{-4} lb·ft^2	IM B5 Kg	IM B5 lbs
0.18	0.25	**BN 63A 2**	2730	0.63	5.6	0.56	59.9	56.9	51.9	0.77	3	2.1	2.0	E	2.0	0.0048	3.5	7.7
0.25	0.33	**BN 63B 2**	2740	0.87	7.7	0.72	66	64.8	64.8	0.76	3.3	2.3	2.3	E	2.3	0.0055	3.9	8.6
0.37	0.5	**BN 63C 2**	2800	1.26	11.2	0.99	69.1	66.8	66.8	0.78	3.9	2.6	2.6	F	3.3	0.0078	5.1	11
0.37	0.5	**BN 71A 2**	2820	1.25	11.1	0.95	73.8	73	70.6	0.76	4.8	2.8	2.6	H	3.5	0.0082	5.4	12
0.55	0.75	**BN 71B 2**	2820	1.86	16.5	1.37	76	75.8	74.8	0.76	5	2.9	2.8	H	4.1	0.0097	6.2	14
0.75	1	**BN 71C 2**	2810	2.6	23	1.86	76.6	76.2	76.2	0.76	5.1	3.1	2.8	H	5.0	0.0119	7.3	16
0.75	1	**BN 80A 2**	2810	2.6	23	1.75	76.2	75.5	68.3	0.81	4.8	2.6	2.2	G	7.8	0.0185	8.6	19
1.1	1.5	**BN 80B 2**	2800	3.8	33.6	2.57	76.4	76.2	75	0.81	4.8	2.8	2.4	G	9.0	0.0214	9.5	21
1.5	2	**BN 80C 2**	2800	5.1	45	3.4	79.1	79.5	77.2	0.81	4.9	2.7	2.4	G	11.4	0.0271	11.3	25
1.5	2	**BN 90SA 2**	2870	5	44	3.4		81.5	78.1	0.8	5.9	2.7	2.6	H	12.5	0.0297	12.3	27
1.85	2.5	**BN 90SB 2**	2880	6.1	54	4	82.5	82	75.4	0.8	6.2	2.9	2.6	H	16.7	0.0397	14	31
2.2	3	**BN 90L 2**	2880	7.3	65	4.8	82.7	82.1	80.8	0.8	6.3	2.9	2.7	J	16.7	0.0397	14	31
3	4	**BN 100L 2**	2860	10	89	6.7	81.5	81.3	77.4	0.79	5.6	2.6	2.2	H	31	0.0736	20	44
4	5.5	**BN 100LB 2**	2870	13.3	118	8.7	83.1	83	77.8	0.8	5.8	2.7	2.5	H	39	0.0926	23	51
4	5.5	**BN 112M 2**	2900	13.2	117	8.2	85.5	84.5	83	0.82	6.9	3	2.9	J	57	0.135	28	62
5.5	7.5	**BN 132SA 2**	2890	18.2	161	11.2	84.7	84.5	81.2	0.84	5.9	2.6	2.2	G	101	0.240	35	77
7.5	10	**BN 132SB 2**	2900	25	221	14.7	86.5	86.3	84.4	0.85	6.4	2.6	2.2	H	134	0.318	42	93
9.2	12.5	**BN 132M 2**	2930	30	266	17.7	87	86.5	83.6	0.86	6.7	2.8	2.3	H	178	0.422	53	117
11	15	**BN 160MR 2**	2920	36	319	20.6	87.6	87	86	0.88	6.9	2.9	2.5	H	210	0.499	65	143
15	20	**BN 160MB 2**	2930	49	434	28.1	89.6	89.4	88	0.86	7.1	2.6	2.3	H	340	0.808	84	185
18.5	25	**BN 160L 2**	2930	60	531	34	90.4	90.1	89	0.86	7.6	2.7	2.3	J	420	0.998	97	214
22	30	**BN 180M 2**	2930	72	637	40	89.9	89.7	89.5	0.88	7.8	2.6	2.4	J	490	1.164	109	240
30	40	**BN 200LA 2**	2930	98	867	54	90.7	90.1	87.6	0.89	7.8	2.7	2.9	J	770		140	309

d.c. brake FD										Standard	cUs variant	CCC variant
Mod	M_b Nm	M_b lb·in	Z_o 1/h NB	Z_o 1/h SB	J_m x 10^{-4} kgm^2	J_m x 10^{-4} lb·ft^2	IM B5 Kg	IM B5 lbs	CE	CE + UL	CE + CCC
FD 02	1.75	15	3900	4800	2.6	0.0062	5.2	11	•	•	
FD 02	1.75	15	3900	4800	3.0	0.0071	5.6	12	•	•	
FD 02	3.5	31	3600	4500	3.9	0.0093	6.8	15	•	•	
FD 03	3.5	31	3000	4100	4.6	0.0109	8.1	18	•	•	
FD 03	5	44	2900	4200	5.3	0.0126	8.9	20	•	•	
FD 03	5	44	1900	3300	6.1	0.0145	10	22	•	•	
FD 04	5	44	1700	3200	9.4	0.0223	12.5	28	•	•	
FD 04	10	89	1500	3000	10.6	0.0252	13.4	30	•	•	
FD 04	15	133	1300	2600	13.0	0.0308	15.2	34	•	•	
FD 14	15	133	900	2200	14.1	0.0335	16.5	36	•	•	
FD 14	15	133	900	2200	18.3	0.0434	18.2	40	•	•	
FD 05	26	230	900	2200	21	0.0498	20	44	•	•	
FD 15	26	230	700	1600	35	0.0831	26	57	•	•	
FD 15	40	354	450	900	43	0.102	29	64	•	•	
FD 06S	40	354	—	950	66	0.157	39	86	•	•	
FD 06	50	443	—	600	112	0.266	48	106	•	•	
FD 06	50	443	—	550	145	0.344	55	121	•	•	
FD 56	75	664	—	430	189	0.449	66	146	•	•	
									•	•	
									•	•	
									•	•	
									•	•	
									•	•	

4P	1500 min^{-1} - S1	50 Hz

																			d.c. brake FD									Standard	CUS variant	CCC variant
P_n			n	M_n		In 400V	η%			cosφ	$\frac{I_s}{I_n}$	$\frac{M_s}{M_n}$	$\frac{M_a}{M_n}$	KVA code	J_m x 10^{-4}		IM B5		Mod	M_b		Z_o 1/h		J_m x 10^{-4}		IM B5		CE	CE + UL	CE + CCC
kW	hp		min^{-1}	Nm	lb·in	A	100%	75%	50%						kgm^2	lb·ft^2	Kg	lbs		Nm	lb·in	NB	SB	kgm^2	lb·ft^2	Kg	lbs			
0.06	0.08	**BN 56A**	**4**	1340	0.43	3.8	0.28	46.8	44.2	41.3	0.65	2.6	2.3	2	H	1.5	0.0036	3.1	6.8										•	•	•
0.09	0.12	**BN 56B**	**4**	1350	0.64	5.7	0.42	51.7	47.6	42.9	0.60	2.6	2.5	2.4	H	1.5	0.0036	3.1	6.8										•	•	•
0.12	0.16	**BN 63A**	**4**	1350	0.85	7.5	0.47	59.8	56.2	47	0.62	2.6	1.9	1.8	F	2	0.0047	3.5	7.7	**FD 02**	1.75	15	10000	13000	2.6	0.0062	5.2	11	•	•	
0.18	0.25	**BN 63B**	**4**	1320	1.3	11.5	0.71	54.8	52.9	52.5	0.67	2.6	2.2	2	F	2.3	0.0055	3.9	8.6	**FD 02**	3.5	31	10000	13000	3	0.0071	5.6	12	•	•	
0.25	0.33	**BN 63C**	**4**	1340	1.78	15.8	0.8	65.3	65	57.9	0.69	2.7	2.1	1.9	E	3.3	0.0078	5.1	11	**FD 02**	3.5	31	7800	10000	3.9	0.0093	6.8	15	•	•	
0.25	0.33	**BN 71A**	**4**	1380	1.73	15.3	0.78	63.7	62.2	59.1	0.73	3.3	1.9	1.7	F	5.8	0.0138	5.1	11	**FD 03**	3.5	31	7700	11000	6.9	0.0164	7.8	17	•	•	
0.37	0.5	**BN 71B**	**4**	1370	2.6	23	1.05	66.8	66.7	63	0.76	3.7	2	1.9	F	6.9	0.0164	5.9	13	**FD 03**	5	44	6000	9400	8	0.0190	8.6	19	•	•	
0.55	0.75	**BN 71C**	**4**	1380	3.8	33.6	1.55	69	68.9	68.8	0.74	4.1	2.3	2.3	G	9.1	0.0216	7.3	16	**FD 53**	7.5	66	4300	8700	10.2	0.0242	10	22	•	•	
0.55	0.75	**BN 80A**	**4**	1390	3.8	33.6	1.43	72	71.3	69.7	0.77	4.1	2.3	2	F	15	0.0356	8.2	18	**FD 04**	10	89	4100	8000	16.6	0.0394	12.1	27	•	•	
0.75	1	**BN 80B**	**4**	1400	5.1	45	1.85	75	74.5	69.3	0.78	4.9	2.7	2.5	H	20	0.0475	9.9	22	**FD 04**	15	133	4100	7800	22	0.0522	13.8	30	•	•	
1.1	1.5	**BN 80C**	**4**	1400	7.5	66	2.7	75.5	76.2	70.4	0.78	5.1	2.8	2.5	H	25	0.0593	11.3	25	**FD 04**	15	133	2600	5300	27	0.0641	15.2	34	•	•	
1.1	1.5	**BN 90S**	**4**	1390	7.6	67	2.7	76.5	76.2	72.2	0.77	4.6	2.6	2.2	G	21	0.0498	12.2	27	**FD 14**	15	133	4800	8000	23	0.0546	16.4	36	•	•	
1.5	2	**BN 90LA**	**4**	1410	10.2	90	3.6	78.7	78.5	74.9	0.77	5.3	2.8	2.4	H	28	0.0664	13.6	30	**FD 05**	26	230	3400	6000	32	0.0759	19.6	43	•	•	
1.85	2.5	**BN 90LB**	**4**	1390	12.7	112	4.3	78.6	78.9	77.2	0.79	5.1	2.8	2.6	G	30	0.0712	15.1	33	**FD 05**	26	230	3200	5900	34	0.0807	21	47	•	•	
2.2	3	**BN 100LA**	**4**	1410	14.9	132	5.2	81.1	81.4	79.9	0.75	4.5	2.2	2	F	40	0.0949	18	40	**FD 15**	40	354	2600	4700	44	0.1044	25	55	•	•	
3	4	**BN 100LB**	**4**	1410	20	177	6.8	82.6	83.8	83.7	0.77	5	2.3	2.2	G	54	0.1281	22	49	**FD 15**	40	354	2400	4400	58	0.1376	28	62	•	•	
4	5.5	**BN 100LC**	**4**	1400	27.3	241.5	9	82.7	83.1	80.5	0.78	4.7	2.3	2.2	F	61	0.1448	24	53	**FD 55**	55	487	—	1300	65	0.1542	30	66	•	•	
4	5.5	**BN 112M**	**4**	1430	27	239	8.4	84.4	84.2	81.6	0.81	5.6	2.7	2.5	G	98	0.2326	30	66	**FD 06S**	60	531	—	1400	107	0.2539	40	88	•	•	
5.5	7.5	**BN 132S**	**4**	1440	36	319	11.6	84.7	84.8	82.5	0.81	5.5	2.3	2.2	G	213	0.5055	44	97	**FD 56**	75	664	—	1050	223	0.5292	57	126	•	•	
7.5	10	**BN 132MA**	**4**	1440	50	443	15.5	86	86.3	85.3	0.81	5.7	2.5	2.4	H	270	0.6407	53	117	**FD 06**	100	885	—	950	280	0.6645	66	146	•	•	
9.2	12.5	**BN 132MB**	**4**	1440	61	540	18.8	88.4	88.6	87.5	0.81	5.9	2.7	2.5	H	319	0.7570	59	130	**FD 07**	150	1328	—	900	342	0.8116	75	165	•	•	
11	15	**BN 160MR**	**4**	1440	73	646	22.4	87.6	87.8	86	0.81	6	2.7	2.5	G	360	0.8543	70	154	**FD 07**	150	1328	—	850	382	0.9065	86	190	•	•	
11	15	**BN 160M**	**4**	1450	72.4	641.2	22.5	88	88.5	87.5	0.81	6.1	2.5	2.3	G	479	1.137	73	161	**FD 07**	150	1328	—	800	501	1.188	89	196	•	•	
15	20	**BN 160L**	**4**	1460	98	867	30	88.7	88.5	88.4	0.81	6	2.3	2.1	G	650	1.542	99	218	**FD 08**	200	1770	—	750	725	1.720	129	284	•	•	
18.5	25	**BN 180M**	**4**	1460	121	1071	37	89.3	89.5	89.2	0.81	6.2	2.6	2.5	H	790	1.875	115	254	**FD 08**	250	2213	—	700	865	2.053	145	320	•	•	
22	30	**BN 180L**	**4**	1460	144	1275	44	89.9	90	90	0.80	6.4	2.5	2.5	G	1250	2.966	135	298	**FD 09**	300	2655	—	400	1450	3.441	175	386	•	•	
30	40	**BN 200L**	**4**	1460	196	1735	59	91.4	91.7	91	0.80	7.1	2.7	2.8	J	1650	3.916	157	346	**FD 09**	400	3540	—	300	1850	4.390	197	434	•	•	

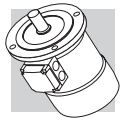

6P	1000 min^{-1} - S1	50 Hz

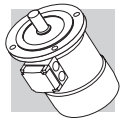

																			d.c. brake FD								Standard	CUS variant	CCC variant
P_n			n	M_n		In 400V	η%			cosφ	$\frac{I_s}{I_n}$	$\frac{M_s}{M_n}$	$\frac{M_a}{M_n}$	KVA code	J_m x 10^{-4}		IM B5		Mod	M_b		Z_o 1/h		J_m x 10^{-4}		IM B5		CE	CE + UL	CE + CCC
kW	hp		min^{-1}	Nm	lb·in	A	100%	75%	50%						kgm^2	lb·ft^2	Kg	lbs		Nm	lb·in	NB	SB	kgm^2	lb·ft^2	Kg	lbs			
0.09	0.12	**BN 63A 6**	880	0.98	8.7	0.6	41	41	32.9	0.53	2.1	2.1	1.8	J	3.4	0.0081	4.6	10	**FD 02**	3.5	31	9000	14000	4	0.0095	6.3	14	•	•	•
0.12	0.16	**BN 63B 6**	870	1.32	11.7	0.64	45	44	41.8	0.6	2.1	1.9	1.7	G	3.7	0.0088	4.9	11	**FD 02**	3.5	31	9000	14000	4.3	0.0102	6.6	15	•	•	
0.18	0.25	**BN 71A 6**	900	1.91	16.9	0.68	55	55.5	51	0.69	2.6	1.9	1.7	F	8.4	0.0199	5.5	12	**FD 03**	5	44	8100	13500	9.5	0.0225	8.2	18	•	•	
0.25	0.33	**BN 71B 6**	900	2.7	23.9	0.82	62	58.5	51.4	0.71	2.6	1.9	1.7	D	10.9	0.0259	6.7	15	**FD 03**	5	44	7800	13000	12	0.0285	9.4	21	•	•	
0.37	0.5	**BN 71C 6**	910	3.9	34.5	1.17	66	60	53.3	0.69	3	2.4	2	E	12.9	0.0306	7.7	17	**FD 53**	7.5	66	5100	9500	14	0.0332	10.4	23	•	•	
0.37	0.5	**BN 80A 6**	910	3.9	34.5	1.15	68	67.4	63.3	0.68	3.2	2.2	2	F	21	0.0498	9.9	22	**FD 04**	10	89	5200	8500	23	0.0546	13.8	30	•	•	
0.55	0.75	**BN 80B 6**	920	5.7	50	1.67	70	69.8	64.3	0.68	3.9	2.6	2.2	G	25	0.0593	11.3	25	**FD 04**	15	133	4800	7200	27	0.0641	15.2	34	•	•	
0.75	1	**BN 80C 6**	920	7.8	69	2.38	70	70	64.4	0.65	3.8	2.5	2.2	G	28	0.0664	12.2	27	**FD 04**	15	133	3400	6400	30	0.0712	16.1	35	•	•	
0.75	1	**BN 90S 6**	920	7.8	69	2.27	70	69	64.2	0.68	3.8	2.4	2.2	G	26	0.0617	12.6	28	**FD 14**	15	133	3400	6500	28	0.0664	16.8	37	•	•	
1.1	1.5	**BN 90L 6**	920	11.4	101	3.2	72.9	72.6	69.1	0.69	3.9	2.3	2	G	33	0.0783	15	33	**FD 05**	26	230	2700	5000	37	0.0878	21	46	•	•	
1.5	2	**BN 100LA 6**	940	15.2	135	4	75.2	74.2	70.3	0.72	4.1	2.1	2	G	82	0.1946	22	49	**FD 15**	40	354	1900	4100	86	0.2041	28	62	•	•	
1.85	2.5	**BN 100LB 6**	930	19	168	4.8	76.6	72.8	62.6	0.73	4.6	2.1	2	G	95	0.2254	24	53	**FD 15**	40	354	1700	3600	99	0.2349	30	66	•	•	
2.2	3	**BN 112M 6**	940	22	195	5.5	78.5	79	76.5	0.73	4.8	2.2	2	H	168	0.3987	32	71	**FD 06S**	60	531	—	2100	177	0.4200	42	93	•	•	
3	4	**BN 132S 6**	940	30	266	7.1	79.7	77	75.1	0.76	5.1	1.9	1.8	G	216	0.5126	36	79	**FD 56**	75	664	—	1400	226	0.5363	49	108	•	•	
4	5.5	**BN 132MA 6**	950	40	354	9.2	81.4	81.5	79.5	0.77	5.5	2	1.8	H	295	0.7000	45	99	**FD 06**	100	885	—	1200	305	0.7238	58	128	•	•	
5.5	7.5	**BN 132MB 6**	945	56	496	12.2	83.1	80.9	79.1	0.78	6.1	2.1	1.9	H	383	0.9089	56	123	**FD 07**	150	1328	—	1050	406	0.9635	72	159	•	•	
7.5	10	**BN 160M 6**	955	75	664	15.7	85	85	84.8	0.81	5.9	2.2	2	H	740	1.7560	83	183	**FD 08**	170	1505	—	900	815	1.9340	112	247	•	•	
11	15	**BN 160L 6**	960	109	965	22.7	86.4	86.5	85.9	0.81	6.6	2.5	2.3	H	970	2.3018	103	227	**FD 08**	200	1770	—	800	1045	2.4798	133	293	•	•	
15	20	**BN 180L 6**	970	148	1310	30	87.7	88	87.3	0.82	6.2	2	2.4	H	1550	3.6782	130	287	**FD 09**	300	2655	—	600	1750	4.1528	170	375	•	•	
18.5	25	**BN 200LA 6**	960	184	1629	37	88.6	88	87.3	0.81	5.9	2	2.3	G	1700	4.0342	145	320	**FD 09**	400	3540	—	450	1900	4.5088	185	408	•	•	

2P	3600 min^{-1} - S1	60 Hz

P_n kW	P_n hp		n min^{-1}	M_n Nm	M_n lb·in	In 460V A	η% 100%	cosφ	$\frac{I_s}{I_n}$	$\frac{M_s}{M_n}$	$\frac{M_a}{M_n}$	KVA code	J_m x 10^{-4} kgm^2	J_m x 10^{-4} lb·ft^2	IM B5 Kg	IM B5 lbs	d.c. brake FD Mod	M_b Nm	M_b lb·in	Z_o 1/h NB	Z_o 1/h SB	J_m x 10^{-4} kgm^2	J_m x 10^{-4} lb·ft^2	IM B5 Kg	IM B5 lbs	Standard CE	CUS variant CE + UL
0.18	0.25	**BN 63A 2**	3360	0.53	4.7	0.55	58	0.74	3.7	2.9	2.4	H	2.0	0.0048	3.5	7.7	**FD 02**	1.75	15	2700	3300	2.6	0.0062	5.2	11	•	•
0.25	0.33	**BN 63B 2**	3370	0.70	6.2	0.69	61	0.73	4.2	2.9	2.9	H	2.3	0.0055	3.9	8.6	**FD 02**	1.75	15	2700	3300	3.0	0.0071	5.6	12	•	•
0.37	0.5	**BN 63C 2**	3430	1.03	9.1	0.88	70	0.75	5.5	3.3	3.2	J	3.3	0.0078	5.1	11	**FD 02**	3.50	30	2500	3000	3.9	0.0093	6.8	15	•	•
0.37	0.5	**BN 71A 2**	3420	1.04	9.2	0.86	71	0.77	5.8	3.3	3.1	J	3.5	0.0082	5.4	12	**FD 03**	3.50	30	2400	3200	4.6	0.0109	8.1	18	•	•
0.55	0.75	**BN 71B 2**	3450	1.55	13.7	1.23	76	0.75	6.2	3.4	3.4	K	4.1	0.0097	6.2	14	**FD 03**	5	44	2200	2700	5.3	0.0126	8.9	20	•	•
0.75	1	**BN 71C 2**	3440	2.08	18.4	1.62	77	0.75	6.2	3.8	3.5	K	5.0	0.0119	7.3	16	**FD 03**	5	44	1500	2100	6.1	0.0145	10	22	•	•
0.75	1	**BN 80A 2**	3440	2.1	18.3	1.62	76	0.76	5.9	3.1	2.8	J	7.8	0.0185	8.6	19	**FD 04**	5	44	1400	1700	9.4	0.0223	12.5	28	•	•
1.1	1.5	**BN 80B 2**	3430	3.1	27.6	2.4	77	0.76	6.2	3.8	2.9	J	9.0	0.0214	9.5	21	**FD 04**	10	88	1200	1600	10.6	0.0252	13.4	30	•	•
1.5	2	**BN 80C 2**	3415	4.2	37.2	2.9	81	0.79	6.8	3	2.9	J	11.4	0.0271	11.3	25	**FD 04**	15	133	1000	1300	13.0	0.0308	15.2	34	•	•
1.5	2	**BN 90SA 2**	3480	4.1	36.2	3.04	79	0.78	7.3	3.6	3.2	K	12.5	0.0297	12.2	27	**FD 14**	15	133	750	1000	14.1	0.0335	16.5	36	•	•
1.85	2.5	**BN 90SB 2**	3500	5.0	44.3	3.63	80	0.79	8.5	4.2	3.8	L	16.7	0.0397	14.1	31	**FD 14**	15	133	750	1000	18.3	0.0434	18.2	40	•	•
2.2	3	**BN 90L 2**	3490	6.1	54	4.4	81	0.79	7.3	3.8	3.3	K	16.7	0.0397	14.1	31	**FD 05**	26	230	750	1000	21.0	0.0498	20	44	•	•
3	4	**BN 100L 2**	3470	8.3	73.5	5.9	79	0.81	7.6	3.7	4	L	31.0	0.0736	20	44	**FD 15**	40	354	452	611	35.0	0.0831	26	57	•	•
3.7	5	**BN 100LB 2**	3490	10.2	90	6.7	84	0.83	6.7	2.9	3.3	J	39.0	0.0926	23	51	**FD 15**	40	354	360	500	43.0	0.102	29	64		•
4	5.4	**BN 100LB 2**	3460	11.0	97.4	7.4	83	0.82	7.9	4	3.6	K	39.0	0.0926	23	51	**FD 15**	40	354	360	500	43.0	0.102	29	64	•	
3.7	5	**BN 112M 2**	3540	10.0	88.5	6.7	86.6	0.80	10.4	4.1	4	M	57.0	0.135	28	62	**FD 06S**	40	354	280	450	66.0	0.157	39	86		•
4	5.4	**BN 112M 2**	3530	10.8	95.6	7.2	85.7	0.83	9.7	3.8	3.7	M	57.0	0.135	28	62	**FD 06S**	40	354	280	450	66.0	0.157	39	86	•	
5.5	7.5	**BN 132SA 2**	3490	15.3	135	9.8	83	0.86	6.4	2.7	2.6	H	101.0	0.240	35	77	**FD 06**	50	440	—	400	112	0.266	48	106	•	•
7.5	10	**BN 132SB 2**	3490	20.5	181	13	82	0.88	6.2	2.8	2.7	H	134.0	0.318	42	93	**FD 06**	50	440	—	350	145	0.344	55	121	•	•
9.2	11	**BN 132M 2**	3530	24.9	220.4	15.5	87	0.86	7.7	3	2.9	K	178.0	0.422	53	117	**FD 56**	75	664	—	280	189	0.449	66	146	•	•
11	15	**BN 160MR 2**	3510	30.6	271	18.3	87	0.88	6.9	2.7	2.9	H	210.0	0.499	65	143										•	•
15	20	**BN 160MB 2**	3510	40.6	359	24.2	86	0.9	6	2.5	2.8	G	340.0	0.808	84	185										•	•
18.5	25	**BN 160L 2**	3520	50.7	449	29.2	88	0.91	6.9	2.8	2.7	H	420.0	0.998	97	214										•	•
22	30	**BN 180M 2**	3520	60.7	537	35.1	88	0.91	6.9	2.8	2.8	H	490.0	1.164	109	240										•	•
30	40	**BN 200LA 2**	3530	80.9	716	46.2	89	0.91	6.9	2.6	3.5	H	770.0	1.829	140	309										•	•

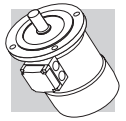

BN-IE1

4P	1800 min^{-1} - S1	60 Hz

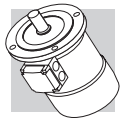

P_n kW	P_n hp		n min^{-1}	M_n Nm	M_n lb·in	In 460V A	η% 100%	cosφ	$\frac{I_s}{I_n}$	$\frac{M_s}{M_n}$	$\frac{M_a}{M_n}$	KVA code	J_m x 10^{-4} kgm^2	J_m x 10^{-4} lb·ft^2	IM B5 Kg	IM B5 lbs	Mod	M_b Nm	M_b lb·in	Z_o 1/h NB	Z_o 1/h SB	J_m x 10^{-4} kgm^2	J_m x 10^{-4} lb·ft^2	IM B5 Kg	IM B5 lbs	Standard CE	CUS variant CE + UL
																	d.c. brake FD											
0.06	0.08	**BN 56A 4**	1670	0.34	3	0.26	53	0.55	2.9	3.1	2.5	J	1.5	0.0036	3.1	6.8										•	•
0.09	0.12	**BN 56B 4**	1670	0.51	4.5	0.37	59	0.52	2.8	2.9	3	H	1.5	0.0036	3.1	6.8										•	•
0.12	0.16	**BN 63A 4**	1650	0.69	6.1	0.43	55	0.64	3.1	2.4	2.2	H	2.0	0.0048	3.5	7.7	**FD 02**	1.75	15	7000	9000	2.6	0.0062	5.2	11	•	•
0.18	0.25	**BN 63B 4**	1670	1.06	9.4	0.68	58	0.59	3.1	2.8	2.4	H	2.3	0.0055	3.9	8.6	**FD 02**	3.5	30	7000	9000	3.0	0.0071	5.6	12	•	•
0.25	0.33	**BN 63C 4**	1640	1.5	13.3	0.77	64	0.65	3.3	2.5	2.4	G	3.3	0.0078	5.1	11.2	**FD 02**	3.5	30	6000	8000	3.9	0.0093	6.8	15	•	•
0.25	0.33	**BN 71A 4**	1700	1.38	12.2	0.65	64	0.74	4.3	2.6	2.1	H	5.8	0.0138	5.1	11	**FD 03**	3.5	30	6000	8500	6.9	0.0164	7.8	18	•	•
0.37	0.5	**BN 71B 4**	1700	2.1	18.5	0.97	66	0.73	4.5	2.6	2.4	H	6.9	0.0164	5.9	13	**FD 03**	5	44	4800	7500	8.0	0.019	8.6	19	•	•
0.55	0.75	**BN 71C 4**	1710	3.1	27.4	1.37	72	0.70	4.9	3	2.8	J	9.1	0.0216	7.3	16	**FD 53**	7.5	66	3400	7000	10.2	0.0242	10	22	•	•
0.55	0.75	**BN 80A 4**	1710	3.1	27.6	1.28	73	0.75	4.9	3	2.4	H	15.0	0.0356	8.2	18.1	**FD 04**	10	89	3400	7000	16.6	0.0394	12.2	27	•	•
0.75	1	**BN 80B 4**	1720	4.1	36.6	1.6	78	0.75	6.2	3.4	3.1	J	20.0	0.0482	10	22	**FD 04**	15	133	3000	6000	22.0	0.0523	13.6	30	•	•
1.1	1.5	**BN 80C 4**	1720	6.1	54.0	2.35	78	0.76	6.5	3.4	3	J	25.0	0.0593	11.3	25	**FD 04**	15	133	2000	4200	27.0	0.0641	15.2	34	•	•
1.1	1.5	**BN 90S 4**	1720	6.2	55	2.43	78	0.74	5.7	3.1	2.7	J	21.0	0.0499	12.2	27	**FD 14**	15	133	3000	7000	23.0	0.0546	16.3	36	•	•
1.5	2	**BN 90LA 4**	1720	8.2	73	3.12	81	0.74	6.6	3.3	3	K	28.0	0.0665	13.6	30	**FD 05**	26	230	2200	4700	32.0	0.0760	19.5	43	•	•
1.85	2.5	**BN 90LB 4**	1720	10.3	91.2	3.8	80	0.76	6.4	3.7	3.2	J	30.0	0.0712	15.1	33	**FD05**	26	230	1800	3800	34.0	0.0807	21.1	47	•	•
2.2	3	**BN 100LA 4**	1720	12.4	110	4.8	81	0.73	5.5	2.7	2.4	H	40.0	0.096	18	40	**FD 15**	40	354	1000	2700	44.0	0.105	25	55	•	•
3	4	**BN 100LB 4**	1720	16.7	147.8	6.2	82.6	0.74	5.6	2.3	2.2	H	54.0	0.128	22	49	**FD 15**	40	354	600	2300	58.0	0.138	28	62	•	•
3.7	5	**BN 100LC 4**	1730	20.6	182	7.5	84	0.74	5.6	2.8	2.9	K	61.0	0.145	25	55	**FD 55**	55	480	—	1200	65.0	0.154	30	66		•
4	5.4	**BN 100LC 4**	1710	22.3	197.4	7.9	84	0.76	5.3	2.6	2.7	H	61.0	0.145	25	55	**FD 55**	55	480	—	1200	65.0	0.154	30	66	•	
3.7	5	**BN 112M 4**	1740	20.3	179.7	7.3	83.5	0.76	7.7	3.5	3.3	K	98.0	0.233	30	66	**FD 06S**	55	480	—	850	107.0	0.254	40	88		•
4	5.5	**BN 112M 4**	1730	22.6	200	8	85	0.76	7	3.1	3	K	98.0	0.233	30	66	**FD 06S**	60	530	—	850	107.0	0.254	40	88	•	
5.5	7.5	**BN 132S 4**	1730	30.8	273	10	84	0.84	6.3	2.9	2.6	H	213.0	0.506	44	97	**FD 56**	75	664	—	850	223.0	0.53	57	126	•	•
7.5	10	**BN 132MA 4**	1740	40.9	362	13.1	85	0.84	6.1	2.9	2.9	H	270.0	0.641	53	117	**FD 06**	100	885	—	700	280.0	0.665	66	146	•	•
9.2	12.5	**BN 132MB 4**	1750	50.2	444.3	16.5	87	0.81	6.8	2.7	2.5	H	319.0	0.757	59	130	**FD 07**	150	1328	—	728	342.0	0.812	75	165	•	•
11	15	**BN 160MR 4**	1740	61.4	543	19.4	88	0.81	6.5	3.1	3	H	360.0	0.855	70	154	**FD 07**	150	1328	—	600	382.0	0.907	86	190	•	•
11	15	**BN 160M 4**	1760	59.7	528.1	18.9	89	0.82	6.1	2.5	2.7	G	479.0	1.367	73	161	**FD 08**	150	1328	—	434	501.0	1.188	89	196	•	•
15	20	**BN 160L 4**	1750	81.3	720	24.8	90	0.84	5.8	2.3	2.5	G	650.0	1.544	99	218	**FD 08**	200	1770	—	400	725.0	1.720	129	284	•	•
18.5	25	**BN 180M 4**	1760	101.1	895	31.3	90	0.83	5.8	2.5	3	G	790.0	1.876	115	254	**FD 08**	250	2210	—	300	865.0	2.054	145	320	•	•
22	30	**BN 180L 4**	1760	119.4	1056.8	39	91	0.79	5.8	2.2	2.7	K	1250.0	2.966	135	298	**FD 09**	300	2655	—	103	1450.0	3.441	175	386	•	•
30	40	**BN 200L 4**	1760	162.8	1440.9	52	91	0.80	6.5	2.7	2.8	H	1650.0	3.916	157	346	**FD 09**	400	3540	—	74	1850.0	4.390	197	434	•	•

2P	3000 min^{-1} - S1	50 Hz

																			d.c. brake FD								Standard	CUS variant	CCC variant
P_n			n	M_n		In 400V	η%			cosφ	$\frac{I_s}{I_n}$	$\frac{M_s}{M_n}$	$\frac{M_a}{M_n}$	KVA code	J_m x 10^{-4}		IM B5		Mod	M_b		Z_o 1/h		J_m x 10^{-4}		IM B5		CE	CE + UL	CE + CCC
kW	hp		min^{-1}	Nm	lb·in	A	100%	75%	50%						kgm^2	lb·ft^2	Kg	lbs		Nm	lb·in	NB	SB	kgm^2	lb·ft^2	Kg	lbs			
0.18	0.25	**M 05A 2**	2730	0.63	5.6	0.56	59.9	56.9	51.9	0.77	3.00	2.10	2.00	F	2.0	0.0047	3.2	7.1	**FD 02**	1.75	15	3900	4800	2.6	0.0062	4.9	11	•	•	
0.25	0.33	**M 05B 2**	2740	0.87	7.7	0.72	66.0	64.8	64.8	0.76	3.30	2.30	2.30	D	2.3	0.0055	3.6	7.9	**FD 02**	1.75	15	3900	4800	3	0.0071	5.3	12	•	•	
0.37	0.5	**M 05C 2**	2800	1.26	11.2	0.99	69.1	66.8	66.8	0.78	3.90	2.60	2.60	A	3.3	0.0078	4.8	11	**FD 02**	3.5	31	3600	4500	3.9	0.0093	6.5	14	•	•	
0.55	0.75	**M 1SD 2**	2820	1.86	16.5	1.37	76.0	75.8	74.8	0.76	5.00	2.90	2.80	A	4.1	0.0097	5.8	13	**FD 03**	5	44	2900	4200	5.3	0.0126	8.5	19	•	•	
0.75	1	**M 1LA 2**	2810	2.6	23	1.86	76.6	76.2	76.2	0.76	5.10	3.10	2.80	J	5	0.0119	6.9	15	**FD 03**	5	44	1900	3300	6.1	0.0145	9.6	21	•	•	
1.1	1.5	**M 2SA 2**	2800	3.8	33.6	2.57	76.4	76.2	75.0	0.81	4.80	2.80	2.40	H	9	0.0214	8.8	19	**FD 04**	10	89	1500	3000	10.6	0.0252	12.7	26	•	•	
1.5	2	**M 2SB 2**	2800	5.1	45	3.4	79.1	79.5	77.2	0.81	4.90	2.70	2.40	F	11.4	0.0271	10.6	23	**FD 04**	15	133	1300	2600	13	0.0308	14.5	22	•	•	
2.2	3	**M 3SA 2**	2880	7.3	65	4.8	82.7	82.1	81.0	0.8	6.30	2.90	2.70	K	24	0.0570	15.5	34	**FD 15**	26	230	1100	2400	28	0.0664	22	49	•	•	
3	4	**M 3LA 2**	2860	10	89	6.7	81.5	81.3	77.4	0.79	5.60	2.60	2.20	J	31	0.0736	18.7	41	**FD 15**	26	230	700	1600	35	0.0831	25	55	•	•	
4	5.5	**M 3LB 2**	2870	13.3	118	8.7	83.1	83.0	77.8	0.8	5.80	2.70	2.50	A	39	0.0925	22	49	**FD 15**	40	354	450	900	43	0.1020	28	62	•	•	
5.5	7.5	**M 4SA 2**	2890	18.2	161	11.2	84.7	84.5	81.2	0.84	5.90	2.60	2.20	H	101	0.2397	33	73	**FD 06**	50	443	—	600	112	0.2658	46	101	•	•	
7.5	10	**M 4SB 2**	2900	25	221	14.7	86.5	86.3	84.4	0.85	6.40	2.60	2.20	J	134	0.3180	40	88	**FD 06**	50	443	—	550	145	0.3441	53	117	•	•	
9.2	12.5	**M 4LA 2**	2930	30	266	17.7	87.0	86.5	83.6	0.86	6.70	2.80	2.30	J	178	0.4224	51	112	**FD 56**	75	664	—	430	189	0.4485	64	141	•	•	
11	15	**M 4LC 2**	2920	36	319	20.6	87.6	87.0	86.0	0.88	6.90	2.90	2.50	J	210	0.4983	60	132										•	•	
15	20	**M 5SB 2**	2930	49	434	28.1	89.6	89.4	88.0	0.86	7.10	2.60	2.30	J	340	0.8068	70	154										•	•	
18.5	25	**M 5SC 2**	2930	60	531	34	90.4	90.1	89.0	0.86	7.60	2.70	2.30	K	420	0.9967	83	183										•	•	
22	30	**M 5LA 2**	2930	72	637	40	89.9	89.7	89.5	0.88	7.80	2.60	2.40	K	490	1.1628	95	209										•	•	

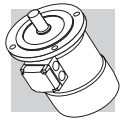

4P	1500 min^{-1} - S1	50 Hz

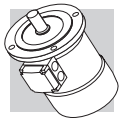

																		d.c. brake FD								Standard	CUS variant	CCC variant
P_n			n	M_n		In 400V	η%			cosφ	$\frac{I_s}{I_n}$	$\frac{M_s}{M_n}$	$\frac{M_a}{M_n}$	KVA code	J_m x 10^{-4}		IM B5		Mod	M_b		Z_o 1/h		J_m x 10^{-4}		IM B5		CE	CE + UL	CE + CCC
kW	hp		min^{-1}	Nm	lb·in	A	100%	75%	50%						kgm^2	lb·ft^2	Kg	lbs		Nm	lb·in	NB	SB	kgm^2	lb·ft^2	Kg	lbs			
0.09	0.12	**M 0B 4**	1350	0.64	5.7	0.42	51.7	47.6	42.9	0.6	2.6	2.5	2.4	H	1.5	0.0036	2.9	6.4										•	•	•
0.12	0.16	**M 05A 4**	1350	0.85	7.5	0.47	59.8	56.2	47	0.62	2.6	1.9	1.8	E	2	0.0047	3.2	7.1	**FD 02**	1.75	15	10000	13000	2.6	0.0062	4.9	11	•	•	
0.18	0.25	**M 05B 4**	1320	1.3	11.5	0.71	54.8	52.9	52.5	0.67	2.6	2.2	2	A	2.3	0.0055	3.6	7.9	**FD 02**	3.5	31	10000	13000	3	0.0071	5.3	12	•	•	
0.25	0.33	**M 05C 4**	1340	1.78	15.8	0.8	65.3	65	57.9	0.69	2.7	2.1	1.9	E	3.3	0.0078	4.8	11	**FD 02**	3.5	31	7800	10000	3.9	0.0093	6.5	14	•	•	
0.37	0.5	**M 1SD 4**	1370	2.6	23	1.05	66.8	66.7	63	0.76	3.7	2	1.9	D	6.9	0.0164	5.5	12	**FD 03**	5	44	6000	9400	8	0.0190	8.2	18	•	•	
0.55	0.75	**M 1LA 4**	1380	3.8	33.6	1.55	69	68.9	68.8	0.74	4.1	2.3	2.3	G	9.1	0.0216	6.9	15	**FD 53**	7.5	66	4300	8700	10.2	0.0242	9.6	21	•	•	
0.75	1	**M 2SA 4**	1400	5.1	45	1.85	75	74.5	69.3	0.78	4.9	2.7	2.5	A	20	0.0475	9.2	20	**FD 04**	15	133	4100	7800	22	0.0522	13.1	29	•	•	
1.1	1.5	**M 2SB 4**	1400	7.5	66	2.66	76.4	76.2	70.4	0.78	5.1	2.8	2.5	G	25	0.0593	10.6	23	**FD 04**	15	133	2600	5300	27	0.0641	14.5	32	•	•	
1.5	2	**M 3SA 4**	1410	10.2	90	3.5	79.6	80.5	79.3	0.77	4.6	2.1	2.1	D	34	0.0807	15.5	34	**FD 15**	26	230	2800	4900	38	0.0902	22	49	•	•	
2.2	3	**M 3LA 4**	1410	14.9	132	5.2	81.1	81.4	79.9	0.75	4.5	2.2	2	A	40	0.0949	17	37	**FD 15**	40	354	2600	4700	44	0.1044	24	53	•	•	
3	4	**M 3LB 4**	1410	20	177	6.8	82.6	83.8	83.7	0.77	5	2.3	2.2	G	54	0.1281	21	46	**FD 15**	40	354	2400	4400	58	0.1376	27	60	•	•	
4	5.5	**M 3LC 4**	1400	27	239	9	82.7	83.1	80.5	0.78	4.7	2.3	2.2	F	61	0.1448	23	51	**FD 55**	55	487	—	1300	65	0.1542	29	64	•	•	
5.5	7.5	**M 4SA 4**	1440	36	319	11.6	84.7	84.8	82.5	0.81	5.5	2.3	2.2	A	213	0.5055	42	93	**FD 56**	75	664	—	1050	223	0.5292	55	121	•	•	
7.5	10	**M 4LA 4**	1440	50	443	15.5	86	86.3	85.3	0.81	5.7	2.5	2.4	G	270	0.6407	51	112	**FD 06**	100	885	—	950	280	0.6645	64	141	•	•	
9.2	12.5	**M 4LB 4**	1440	61	540	18.8	88.4	88.6	87.5	0.81	5.9	2.7	2.5	G	319	0.7570	57	126	**FD 07**	150	1328	—	900	342	0.8116	73	161	•	•	
11	15	**M 4LC 4**	1440	73	646	22.4	87.6	87.8	86	0.81	6	2.7	2.5	G	360	0.8543	65	143	**FD 07**	150	1328	—	850	382	0.9065	81	179	•	•	
15	20	**M 5SB 4**	1460	98	867	30.1	88.7	88.5	88.4	0.81	6	2.3	2.1	G	650	1.5425	85	187	**FD 08**	200	1770	—	750	725	1.7205	115	254	•	•	
18.5	25	**M 5LA 4**	1460	121	1071	37	89.3	89.5	89.2	0.81	6.2	2.6	2.5	H	790	1.8747	101	223	**FD 08**	250	2213	—	700	865	2.0527	131	289	•	•	

6P	1000 min^{-1} - S1	50 Hz

P_n kW	P_n hp		n min^{-1}	M_n Nm	M_n lb·in	In 400V A	η% 100%	η% 75%	η% 50%	cosφ	$\frac{I_s}{I_n}$	$\frac{M_s}{M_n}$	$\frac{M_a}{M_n}$	KVA code	J_m x 10^{-4} kgm^2	J_m x 10^{-4} lb·ft^2	IM B5 Kg	IM B5 lbs	Mod	M_b Nm	M_b lb·in	Z_o 1/h NB	Z_o 1/h SB	J_m x 10^{-4} kgm^2	J_m x 10^{-4} lb·ft^2	IM B5 Kg	IM B5 lbs	CE	CE + UL	CE + CCC
																			d.c. brake FD								Standard	CUS variant	CCC variant
0.09	0.12	**M 05A 6**	880	0.98	8.7	0.6	41	41	32.9	0.53	2.1	2.1	1.8	J	3.4	0.0081	4.3	9.5	**FD 02**	3.5	31	9000	14000	4	0.0095	6	13	•	•	•
0.12	0.16	**M 05B 6**	870	1.32	11.7	0.64	45	44	41.8	0.6	2.1	1.9	1.7	F	3.7	0.0088	4.6	10	**FD 02**	3.5	31	9000	14000	4.3	0.0102	6.3	14	•	•	
0.18	0.25	**M 1SC 6**	900	1.91	16.9	0.68	55	55.5	51	0.69	2.6	1.9	1.7	A	8.4	0.0199	5.1	11	**FD 03**	5	44	8100	13500	9.5	0.0225	7.8	17	•	•	
0.25	0.33	**M 1SD 6**	900	2.7	23.9	0.82	62	58.5	51.4	0.71	2.6	1.9	1.7	D	10.9	0.0259	6.3	14	**FD 03**	5	44	7800	13000	12	0.0285	9	20	•	•	
0.37	0.5	**M 1LA 6**	910	3.9	34.5	1.17	66	60	53.3	0.69	3	2.4	2	B	12.9	0.0306	7.3	16	**FD 53**	7.5	66	5100	9500	14	0.0332	10	22	•	•	
0.55	0.75	**M 2SA 6**	920	5.7	50	1.67	70	69.8	64.3	0.68	3.9	2.6	2.2	G	25	0.0593	10.6	23	**FD 04**	15	133	4800	7200	27	0.0641	14.5	32	•	•	
0.75	1	**M 2SB 6**	920	7.8	69	2.38	70	70	64.4	0.65	3.8	2.5	2.2	A	28	0.0664	11.5	25	**FD 04**	15	133	3400	6400	30	0.0712	15.4	34	•	•	
1.1	1.5	**M 3SA 6**	920	11.4	101	2.9	75	74	72	0.72	4.3	2	1.8	G	62	0.1470	17	37	**FD 15**	26	230	2700	5000	66	0.1571	23	51	•	•	
1.5	2	**M 3LA 6**	940	15.2	135	4	75.2	74.2	70.3	0.72	4.1	2.1	2	D	82	0.1946	21	46	**FD 15**	40	354	1900	4100	86	0.2041	27	60	•	•	
1.85	2.5	**M 3LB 6**	930	19	168	4.8	76.6	72.8	62.6	0.73	4.6	2.1	2	A	95	0.2254	23	51	**FD 15**	40	354	1700	3600	99	0.2349	29	64	•	•	
2.2	3	**M 3LC 6**	930	23	204	5.8	77.7	76.8	72.4	0.71	4.7	2.3	2.1	G	95	0.2254	23	51	**FD 55**	55	487	—	1900	99	0.2349	29	64	•	•	
3	4	**M 4SA 6**	940	30	266	7.1	79.7	77	75.1	0.76	5.1	1.9	1.8	G	216	0.5126	34	75	**FD 56**	75	664	—	1400	226	0.5363	47	104	•	•	
4	5.5	**M 4LA 6**	950	40	354	9.2	81.4	81.5	79.5	0.77	5.5	2	1.8	A	295	0.7000	43	95	**FD 06**	100	885	—	1200	305	0.7238	56	123	•	•	
5.5	7.5	**M 4LB 6**	945	56	496	12.2	83.1	80.9	79.1	0.78	6.1	2.1	1.9	H	383	0.9089	54	119	**FD 07**	150	1328	—	1050	406	0.9635	70	154	•	•	
7.5	10	**M 5SA 6**	955	75	664	15.7	85	85	84.8	0.81	5.9	2.2	2	H	740	1.7560	69	152	**FD 08**	170	1505	—	900	815	1.9340	98	216	•	•	
11	15	**M 5SB 6**	960	109	965	22.7	86.4	86.5	85.9	0.81	6.6	2.5	2.3	H	970	2.3018	89	196	**FD 08**	200	1770	—	800	1045	2.4798	119	262	•	•	

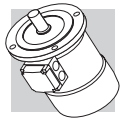

2P	3600 min^{-1} - S1	60 Hz

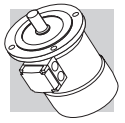

																	d.c. brake FD									Standard	CUS variant
P_n			n	M_n		In 460V	η%	cosφ	$\frac{I_s}{I_n}$	$\frac{M_s}{M_n}$	$\frac{M_a}{M_n}$	KVA code	J_m x 10^{-4}		IM B5		Mod	M_b		Z_o 1/h		J_m x 10^{-4}		IM B5		CE	CE + UL
kW	hp		min^{-1}	Nm	lb·in	A	100%						kgm^2	lb·ft^2	Kg	lbs		Nm	lb·in	NB	SB	kgm^2	lb·ft^2	Kg	lbs		
0.18	0.25	**M 05A 2**	3380	0.53	4.7	0.53	58	0.74	4.1	3	2.4	H	2.0	0.0048	3.2	7.1	**FD 02**	1.75	15	2700	3300	2.6	0.0062	4.9	11	•	•
0.25	0.33	**M 05B 2**	3370	0.70	6.2	0.69	61	0.73	4.9	3.2	2.9	K	2.3	0.0055	3.6	7.9	**FD 02**	1.75	15	2700	3300	3.0	0.0071	5.3	12	•	•
0.37	0.5	**M 05C 2**	3430	1.04	9.2	0.88	69	0.76	5.5	3.3	3.2	J	3.3	0.0078	4.8	10.6	**FD 02**	3.5	30	2500	3000	3.9	0.0093	6.5	14	•	•
0.55	0.75	**M 1SD 2**	3450	1.55	13.7	1.23	76	0.75	6.2	3.4	3.4	K	4.1	0.0097	5.8	12.8	**FD 03**	5	44	2200	2700	5.3	0.0126	8.5	19	•	•
0.75	1	**M 1LA 2**	3440	2.07	18.3	1.62	77	0.75	6.2	3.8	3.5	K	5.0	0.0119	6.9	15.2	**FD 03**	5	44	1500	2100	6.1	0.0145	9.5	21	•	•
1.1	1.5	**M 2SA 2**	3430	3.12	27.6	2.4	77	0.76	6.2	3.8	2.9	J	9.0	0.0214	8.8	19.4	**FD 04**	10	88	1200	1600	10.6	0.0252	12.7	28	•	•
1.5	2	**M 2SB 2**	3415	4.16	36.8	2.9	80	0.79	6	3.3	2.9	H	11.4	0.0271	10.4	23	**FD 04**	15	133	1000	1300	13.0	0.0309	14.5	32	•	•
2.2	3	**M 3SA 2**	3430	6.21	55	4.2	81	0.83	6	2.4	3.2	H	24.0	0.0570	15.4	34	**FD 15**	26	230	800	1000	28.0	0.0665	22	49	•	•
3	4	**M 3LA 2**	3470	8.3	73.5	5.9	79	0.81	7.6	3.7	4	K	31.0	0.0736	18.7	34	**FD 15**	40	354	450	600	35.0	0.0831	25	55	•	•
3.7	5	**M 3LB 2**	3490	10.4	92	6.7	84	0.83	6.7	2.9	3.2	J	39.0	0.0926	22	49	**FD 15**	40	354	360	500	43.0	0.102	28	62		•
4	5.4	**M 3LB 2**	3460	11.0	97.4	7.4	83	0.82	7.9	4	3.6	K	39.0	0.0926	22	49	**FD15**	40	354	360	500	43.0	0.102	28	62	•	
5.5	7.5	**M 4SA 2**	3490	15.3	135	9.8	83	0.86	6.4	2.7	2.6	H	101	0.2400	33	72	**FD 06**	50	440	—	400	112.0	0.266	46	101	•	•
7.5	10	**M 4SB 2**	3490	20.5	181	13	82	0.88	6.2	2.8	2.7	H	134	0.318	40	88	**FD 06**	50	440	—	350	145.0	0.344	53	117	•	•
9.2	12.5	**M 4LA 2**	3530	24.9	220	15.5	87	0.86	7.7	3	2.9	K	178	0.422	51	112	**FD 56**	75	664	—	280	189.0	0.449	64	141	•	•
11	15	**M 4LC 2**	3510	30.6	271	18.3	87	0.88	6.9	2.7	2.9	H	210	0.499	60	132										•	•
15	20	**M 5SB 2**	3510	40.6	359	24.2	86	0.9	6	2.5	2.8	G	340	0.808	70	154										•	•
18.5	25	**M 5SC 2**	3520	50.7	449	29.2	88	0.91	6.9	2.8	2.7	H	420	0.998	83	183										•	•
22	30	**M 5LA 2**	3520	60.7	537	35.1	88	0.91	6.9	2.8	2.8	H	490	1.164	95	209										•	•

4P	1800 min^{-1} - S1	60 Hz

																	d.c. brake FD								Standard	CUS variant
P_n			n	M_n		In 460V	η%	cosφ	$\frac{I_s}{I_n}$	$\frac{M_s}{M_n}$	$\frac{M_a}{M_n}$	KVA code	J_m x 10^{-4}		IM B5		Mod	M_b		Z_o 1/h		J_m x 10^{-4}		IM B5		CE	CE + UL
kW	hp		min^{-1}	Nm	lb·in	A	100%						kgm^2	lb·ft^2	Kg	lbs		Nm	lb·in	NB	SB	kgm^2	lb·ft^2	Kg	lbs		
0.09	0.12	**M 0B 4**	1670	0.51	4.5	0.37	59	0.52	2.8	2.9	3	H	1.5	0.0036	2.9	6.4										•	•
0.12	0.16	**M 05A 4**	1690	0.68	6	0.43	60	0.57	3.1	2.4	2.3	H	2.0	0.0048	3.2	7.1	**FD 02**	1.75	15	7000	9000	2.6	0.0062	4.9	11	•	•
0.18	0.25	**M 05B 4**	1670	1.06	9.4	0.65	58	0.6	3.2	2.8	2.4	H	2.3	0.0055	3.6	7.9	**FD 02**	3.5	30	7000	9000	3.0	0.0071	5.3	12	•	•
0.25	0.33	**M 05C 4**	1670	1.40	12.4	0.77	64	0.65	3.3	2.5	2.4	G	3.3	0.0078	4.8	10.6	**FD 02**	3.5	30	6000	8000	3.9	0.0093	6.5	14	•	•
0.37	0.5	**M 1SD 4**	1700	2.09	18.5	0.96	66	0.73	4.5	2.6	2.4	H	6.9	0.0164	5.5	12.1	**FD 03**	5.0	44	4800	7500	8.0	0.019	8.2	18	•	•
0.55	0.75	**M 1LA 4**	1710	3.12	27.6	1.37	72	0.7	4.9	3	2.8	J	9.1	0.0216	6.9	15.2	**FD 53**	7.5	66	3400	7000	10.2	0.0242	9.5	21	•	•
0.75	1	**M 2SA 4**	1720	4.14	36.6	1.61	78	0.75	6.2	3.4	3.1	J	20.0	0.0475	9.1	20	**FD 04**	15	133	3000	6000	22.0	0.0523	13.2	29	•	•
1.1	1.5	**M 2SB 4**	1720	6.21	55	2.33	78	0.76	6.3	3.4	3	J	25	0.0594	10.4	23	**FD 04**	15	133	2000	4200	27.0	0.0641	14.5	32	•	•
1.5	2	**M 3SA 4**	1720	8.25	73	3.15	82	0.73	5.7	2.9	2.6	J	34.0	0.0808	15.4	34	**FD 15**	26	230	1500	3000	38.0	0.0903	22	49	•	•
2.2	3	**M 3LA 4**	1720	12.4	110	4.67	81	0.73	5.5	2.7	2.4	H	40.0	0.0960	16.8	37	**FD 15**	40	354	1000	2700	44.0	0.105	24	53	•	•
3	4	**M 3LB 4**	1720	16.7	147.8	6.2	82.6	0.74	5.6	2.3	2.2	H	54.0	0.128	21	46	**FD 15**	40	354	600	2300	58.0	0.138	27	60	•	•
3.7	5	**M 3LC 4**	1730	20.6	182	7.5	84	0.74	5.6	2.8	2.9	H	61.0	0.145	23	51	**FD 55**	55	480	—	1200	65.0	0.154	29	64		•
4	5.4	**M 3LC 4**	1710	22.3	197.4	7.9	84	0.76	5.4	2.7	2.8	H	61.0	0.145	23	51	**FD 55**	55	480	—	1200	65.0	0.154	29	64	•	
5.5	7.5	**M 4SA 4**	1730	30.8	273	9.8	84	0.84	6.3	2.9	2.6	H	213.0	0.506	42	93	**FD 56**	75	664	—	850	223.0	0.53	55	121	•	•
7.5	10	**M 4LA 4**	1740	40.9	362	13.2	85	0.84	6.1	2.9	2.9	H	270.0	0.641	51	112	**FD 06**	100	885	—	700	280.0	0.665	64	141	•	•
9.2	12.5	**M 4LB 4**	1750	50.2	444.3	16.5	87	0.81	6.8	2.7	2.5	H	319.0	0.757	57	126	**FD 07**	150	1328	—	728	342.0	0.812	73	161	•	•
11	15	**M 4LC 4**	1740	61.4	543	19.4	88	0.81	6.5	3.1	3	H	360.0	0.855	65	143	**FD 07**	150	1328	—	600	382.0	0.907	81	179	•	•
15	20	**M 5SB 4**	1750	81.4	720	24.9	90	0.84	5.8	2.3	2.5	G	650.0	1.544	85	187	**FD 08**	200	1770	—	400	725.0	1.7202	115	254	•	•
18.5	25	**M 5LA 4**	1760	101	895	31.1	90	0.83	5.8	2.5	3	G	790.0	1.876	101	223	**FD 08**	250	2210	—	300	865.0	2.054	131	289	•	•

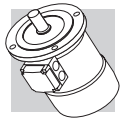

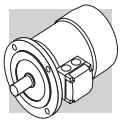

BN - IM B3

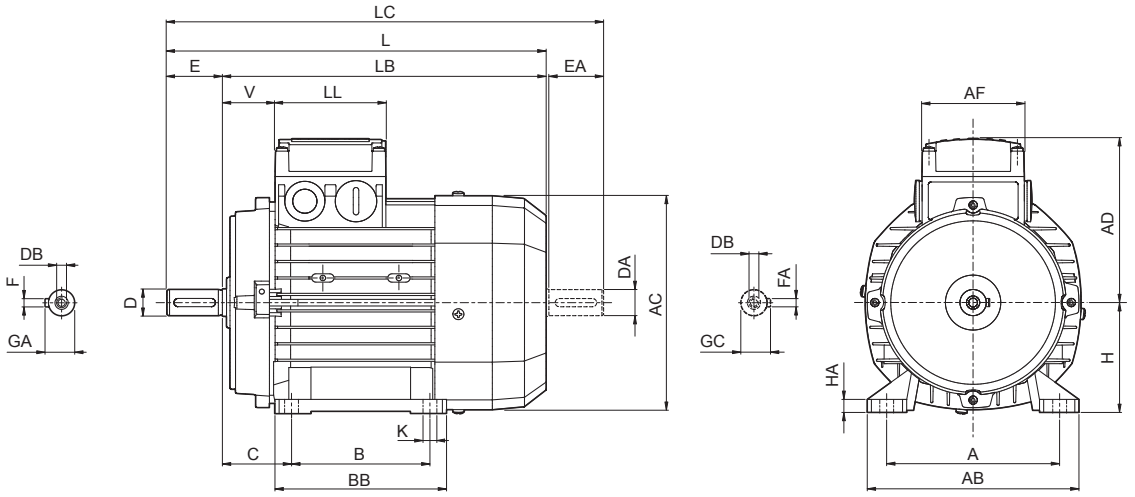

	Shaft					Housing						Motor									
	D DA	E EA	DB	GA GC	F FA	B	A	HA	BB	AB	K	C	H	AC	L	LB	LC	AD	AF	LL	V
BN 63	11	23	M4	12.5	4	80	100	8	96	120	7	40	63	121	207	184	232	95	74	80	30
BN 71	14	30	M5	16	5	90	112	8	112	135		45	71	138	249	219	281	108			37
BN 80	19	40	M6	21.5	6	100	125	8	124	153	10	50	80	156	273	233	315	119			38
BN 90 S	24	50	M8	27	8		140	8	155	174		56	90	176	326	276	378	133	98	98	44
BN 90 L						125															
BN 100	28	60	M10	31	8	140	160	10	175	192	12	63	100	195	366	306	429	142			50
BN 112							190			224		70	112	219	385	325	448	157			52
BN 132 S	38	80	M12	41	10		216	12	218	254		89	132	260	493	413	576	193	118	118	58
BN 132 M						178															
BN 160 M	42 38(1)	110 80(1)	M16 M12(1)	45 41(1)	12 10(1)	210	254	25	264	319	14.5	108	160	310	596	486	680	245	187	187	51
BN 160 L						254			304						640	530	724				
BN 180 L	48 42(1)	110 110(1)	M16 M16(1)	51.5 45(1)	14 12(1)	279	279	26	329	359	14	121	180	348	708	598	823	261			52
BN 200 L	55 42(1)		M20 M16(1)	59 45(1)	16 12(1)	305	318		355	398	18	133	200		722	612	837				64

NOTE: 1) These values refer to the rear shaft end.

BN - IM B5

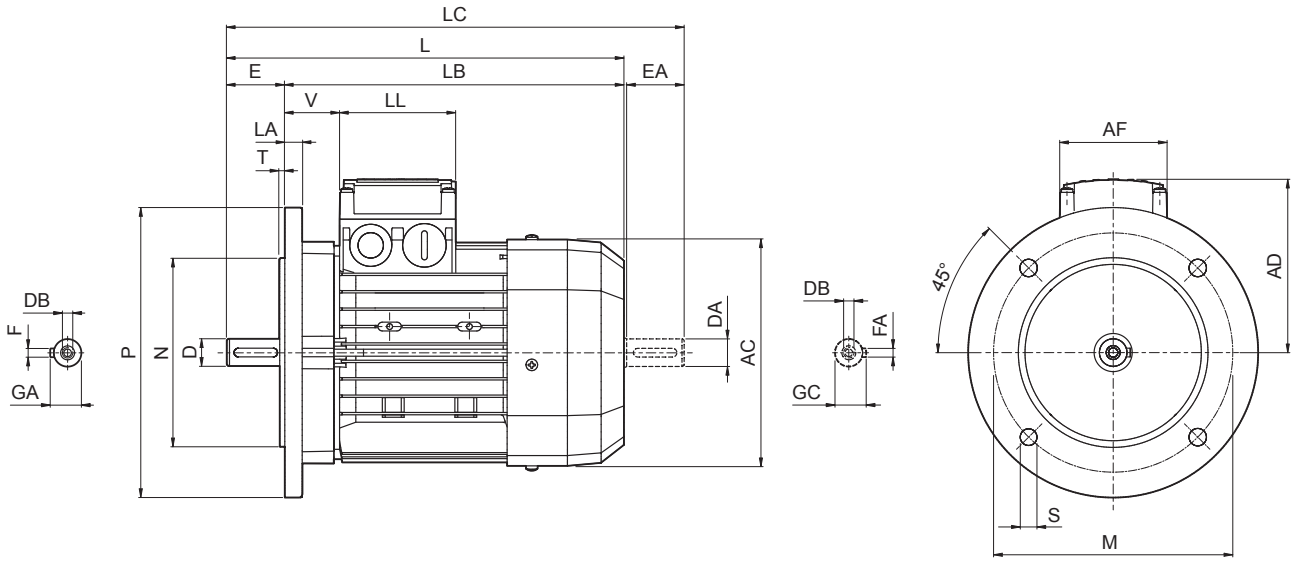

	Shaft					Flange						Motor							
	D DA	**E EA**	**DB**	**GA GC**	**F FA**	**M**	**N**	**P**	**S**	**T**	**LA**	**AC**	**L**	**LB**	**LC**	**AD**	**AF**	**LL**	**V**
BN 56	9	20	M3	10.2	3	100	80	120	7	3	8	110	185	165	207	91	74	80	34
BN 63	11	23	M4	12.5	4	115	95	140	9.5		10	121	207	184	232	95			26
BN 71	14	30	M5	16	5	130	110	160		3.5		138	249	219	281	108			37
BN 80	19	40	M6	21.5	6	165	130	200	11.5		11.5	156	274	234	315	119			38
BN 90	24	50	M8	27	8							176	326	276	378	133	98	98	44
BN 100	28	60	M10	31		215	180	250	14	4	14	195	367	307	429	142			50
BN 112											15	219	385	325	448	157			52
BN 132	38	80	M12	41	10	265	230	300			20	258	493	413	576	193	118	118	58
BN 160 MR	42 38(1)	110 80(1)	M16 M12(1)	45 41(1)	12 10(1)	300	250	350	18.5	5	15		562	452	645				218
BN 160 M												310	596	486	680	245	187	187	51
BN 160 L																			
BN 180 M	48 38(1)	110 110(1)		51.5 41(1)	14 10(1)							310	640	530	724				
BN 180 L	48 42(1)		M16 M16(1)	51.5 45(1)	14 12(1)						18	348	708	598	823	261			52
BN 200 L	55 42(1)		M20 M16(1)	59 45(1)	16 12(1)	350	300	400					722	612	837				66

NOTE: 1) These values refer to the rear shaft end.

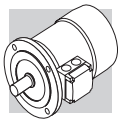

BN - IM B14

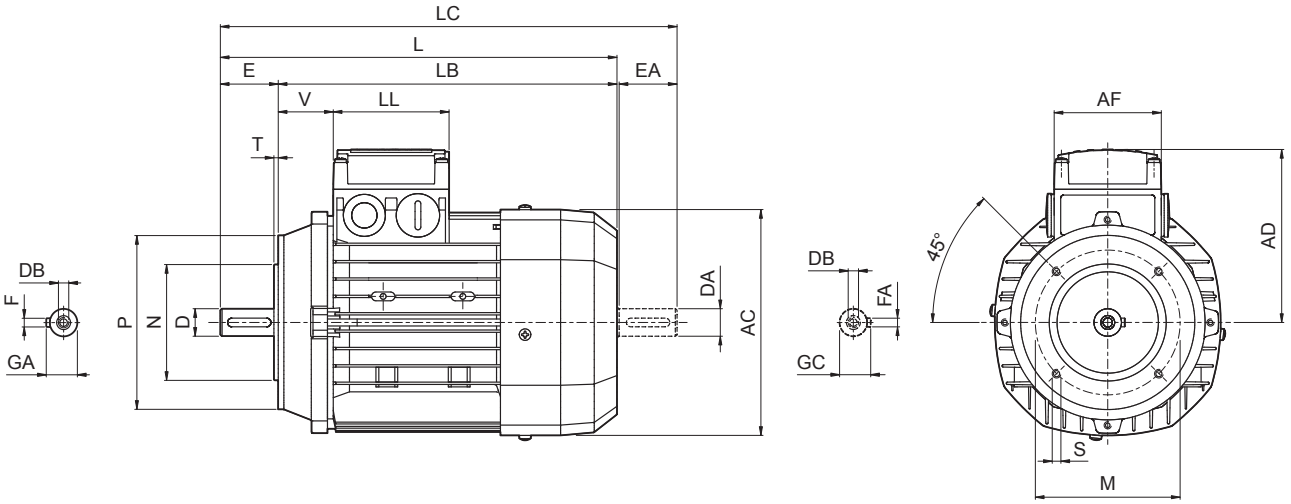

	Shaft					Flange					Motor							
	D DA	**E EA**	**DB**	**GA GC**	**F FA**	**M**	**N**	**P**	**S**	**T**	**AC**	**L**	**LB**	**LC**	**AD**	**AF**	**LL**	**V**
BN 56	9	20	M3	10.2	3	65	50	80	M5	2.5	110	185	165	207	91	74	80	34
BN 63	11	23	M4	12.5	4	75	60	90			121	207	184	232	95			26
BN 71	14	30	M5	16	5	85	70	105	M6		138	249	219	281	108			37
BN 80	19	40	M6	21.5	6	100	80	120		3	156	274	234	315	119			38
BN 90	24	50	M8	27	8	115	95	140	M8		176	326	276	378	133	98	98	44
BN 100	28	60	M10	31		130	110	160		3.5	195	367	307	429	142			50
BN 112											219	385	325	448	157			52
BN 132	38	80	M12	41	10	165	130	200	M10	4	258	493	413	576	193	118	118	58

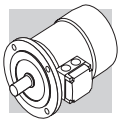

BN - IM B3 - FD

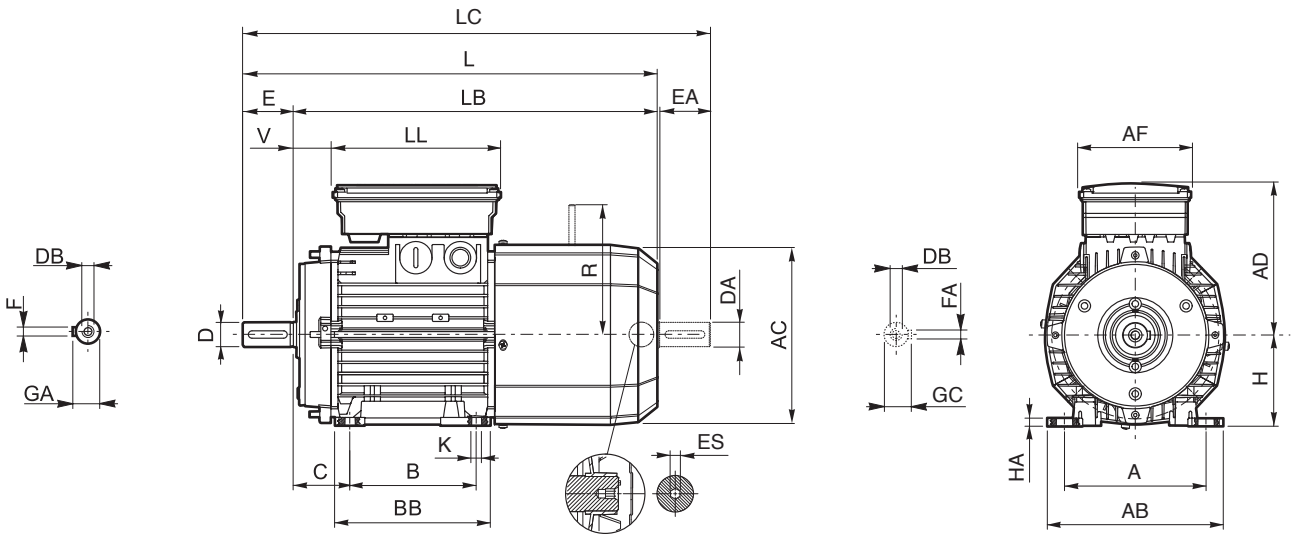

	Shaft					Housing						Motor											
	D DA	E EA	DB	GA GC	F FA	B	A	HA	BB	AB	K	C	H	AC	L	LB	LC	AD	AF	LL	V	R	S
BN 63	11	23	M4	12.5	4	80	100	8	96	120	7	40	63	121	272	249	297	122	98	133	14	96	5
BN 71	14	30	M5	16	5	90	112		112	135		45	71	138	310	280	342	135			25	103	
BN 80	19	40	M6	21.5	6	100	125		124	153	10	50	80	156	346	306	388	146			41	129	
BN 90 S	24	50	M8	27	8		140		155	174		56	90	176	409	359	461	149	110	165	15		6
BN 90 L						125															39	160	
BN 100	28	60	M10	31		140	160	10	175	192	12	63	100	195	458	398	521	158			62		
BN 112							190			224		70	112	219	484	424	547	173			73	199	
BN 132 S	38	80	M12	41	10		216	12	218	254		89	132	260	603	523	686	210	140	188	46	204 (2)	
BN 132 M						178																	
BN 160 M	42 38(1)	110 80(1)	M16 M12(1)	45 41(1)	12 10(1)	210	254	25	264	319	14.5	108	160	310	736	626	820	245	187	187	51	266	—
BN 160 L						254			304						780	670	864						
BN 180 L	48 42(1)	110 110(1)	M16 M16(1)	51.5 45(1)	14 12(1)	279	279	26	329	359	14	121	180	348	866	756	981	261			52	305	
BN 200 L	55 42(1)		M20 M16(1)	59 45(1)	16 12(1)	305	318		355	398	18	133	200		878	768	993				64		

NOTE:
1) These values refer to the rear shaft end.
2) For FD07 brake value R=226.

ES hexagon is not supplied with PS option.

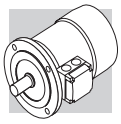

BN - IM B5 - FD

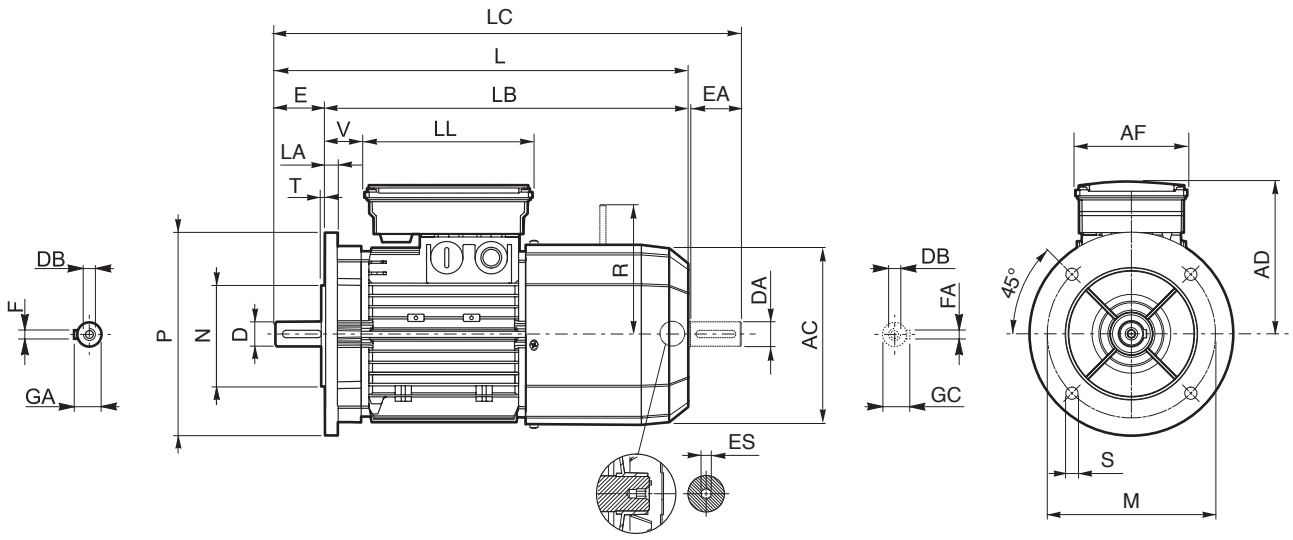

	Shaft					Flange						Motor									
	D DA	E EA	DB	GA GC	F FA	M	N	P	S	T	LA	AC	L	LB	LC	AD	AF	LL	V	R	ES
BN 63	11	23	M4	12.5	4	115	95	140	9.5	3	10	121	272	249	297	122	98	133	14	96	5
BN 71	14	30	M5	16	5	130	110	160	9.5	3.5	11.5	138	310	280	342	135			25	103	
BN 80	19	40	M6	21.5	6	165	130	200	11.5			156	346	306	388	146			41	129	
BN 90 S	24	50	M8	27	8							176	409	359	461	149	110	165	39		6
BN 90 L																146				160	
BN 100	28	60	M10	31		215	180	250	14	4	14	195	458	398	521	158		165	62		
BN 112											15	219	484	424	547	173		165	73	199	
BN 132	38	80	M12	41	10	265	230	300			20	258	603	523	686	210	140	188	46	204[2]	
BN 160 MR	42 38[1]	110 80[1]	M16 M12[1]	45 41[1]	12 10[1]	300	250	350	18.5	5	15		672	562	755				161	226	
BN 160 M												310	736	626	820	245	187	187	51	266	—
BN 160 L	42 38[1]																				
BN 180 M	48 38[1]			51.5 41[1]	14 10[1]								780	670	864						
BN 180 L	48 42[1]	110 110[1]	M16 M16[1]	51.5 45[1]	14 12[1]						18	348	866	756	981	261			52	305	
BN 200 L	55 42[1]		M20 M16[1]	59 45[1]	16 12[1]	350	300	400	18.5				878	768	993				64		

NOTE:
1) These values refer to the rear shaft end.
2) For FD07 brake value R=226.

ES hexagon is not supplied with PS option.

BN - IM B14 - FD

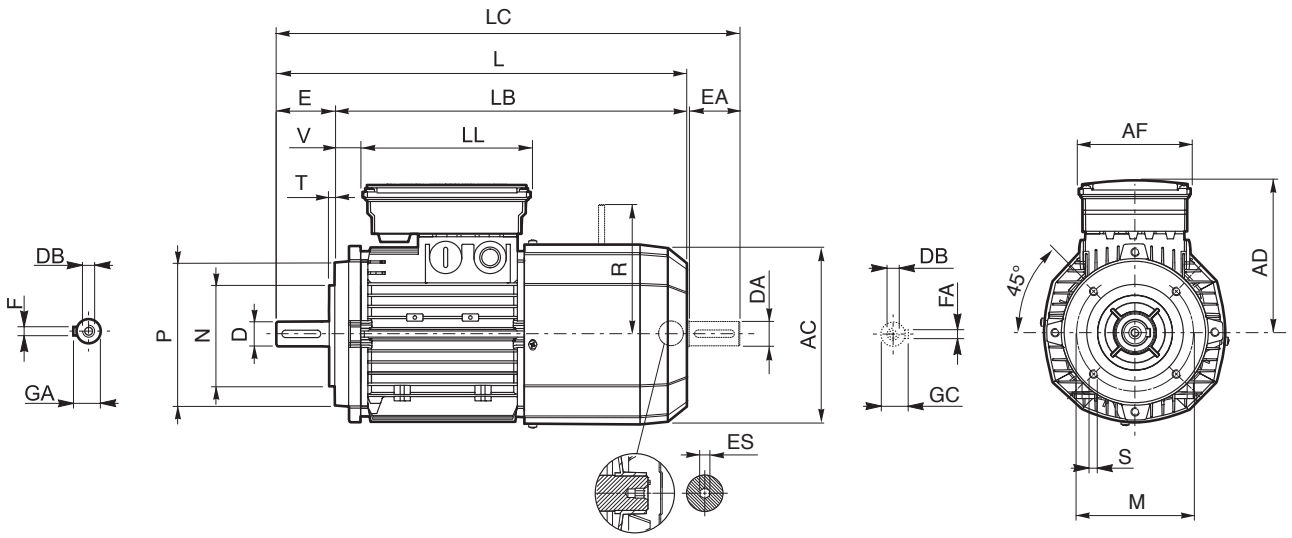

	Shaft					Flange					Motor									
	D DA	E EA	DB	GA GC	F FA	M	N	P	S	T	AC	L	LB	LC	AD	AF	LL	V	R	ES
BN 63	11	23	M4	12.5	4	75	60	90	M5	2.5	121	272	249	297	122	98	133	14	96	5
BN 71	14	30	M5	16	5	85	70	105	M6		138	310	280	342	135			25	103	
BN 80	19	40	M6	21.5	6	100	80	120		3	156	346	306	388	146			41	129	
BN 90 S	24	50	M8	27	8	115	95	140	M8		176	409	359	461	149	110	165	39	129	6
BN 90 L															146				160	
BN 100	28	60	M10	31		130	110	160		3.5	195	458	398	521	158			62		
BN 112											219	484	424	547	173			73	199	
BN 132	38	80	M12	41	10	165	130	200	M10	4	258	603	523	686	210	140	188	46	204(1)	

NOTE:
1) For FD07 brake value R=226.

ES hexagon is not supplied with PS option.

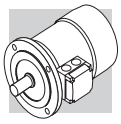

M

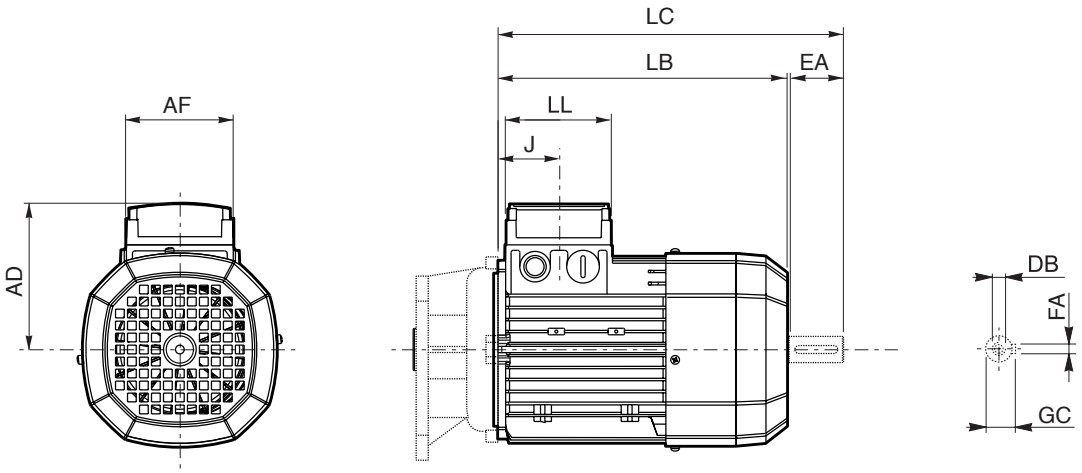

	Rear shaft end					Motor						
	DA	**EA**	**DB**	**FA**	**GC**	**AC**	**LB**	**LC**	**AF**	**LL**	**J**	**AD**
M 0	9	20	M3	3	10.2	110	133	155	74	80	42	91
M 05	11	23	M4	4	12.5	121	165	191			48	95
M 1	14	30	M5	5	16	138	187	219			45	108
M 2 S	19	40	M6	6	21.5	156	202	245			44	119
M 3 S	28	60	M10	8	31	195	230	293	98	98	53.5	142
M 3 L							262	325				
M 4	38	80	M12	10	41	258	361	444	118	118	64.5	193
M 4 LC							396	479				
M 5 S						310	418	502	187	187	77	245
M 5 L							462	546				

M - FD

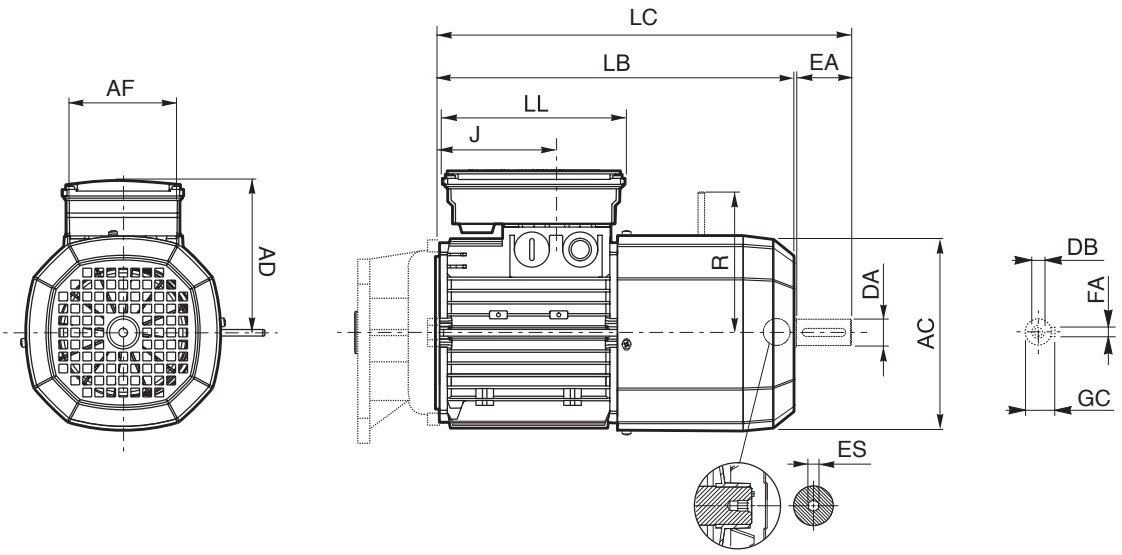

	Rear shaft end					Motor								
	DA	**EA**	**DB**	**FA**	**GC**	**AC**	**LB**	**LC**	**AF**	**LL**	**J**	**AD**	**R**	**ES**
M 05	11	23	M4	4	12.5	121	231	256	98	133	48	122	96	5
M 1	14	30	M5	5	16	138	248	280			73	135	103	
M 2 S	19	40	M6	6	21.5	156	272	314			88	146	129	
M 3 S	28	60	M10	8	31	195	326	389	110	165	124.5	158	160	6
M 3 L							353	416						
M 4	38	80	M12	10	41	258	470	553	140	188	185.5	210	204 (1)	
M 4 LC							495	578			64.5		226	
M 5 S						310	558	642	187	187	77	245	266	—
M 5 L							602	686						

NOTE:
1) For FD07 brake value R=226.

ES hexagon is not supplied with PS option.

INDEX OF REVISIONS

BR_CAT_BNEXY_STD_ENG_R07_0	
	**Description**
	Minor modification on servoventilation variant section Added availability of BY electric motors Minor corrections on dimensions and rating charts Elimination of FA brakes due to phase out Updated motor normative section

2026 06 24

This publication supersedes and replaces any previous edition and revision. We reserve the right to implement modifications without notice. This catalogue cannot be reproduced, even partially, without prior consent.

Bonfiglioli global locations

AUSTRALIA
Bonfiglioli Transmission (Aust.) Pty Ltd
Plumpton NSW

BRAZIL
Bonfiglioli Redutores do Brasil Ltda
São Bernardo do Campo - São Paulo

CHINA
Bonfiglioli Drives (Shanghai) Co. Ltd.
Shanghai

Selcom Electronics (Shanghai) Co., Ltd
Shanghai

Shanghai

FRANCE
Bonfiglioli Transmission S.A.S.
Marly la Ville

GERMANY
Bonfiglioli Deutschland GmbH
Neuss

Bonfiglioli Deutschland GmbH
Krefeld

O&K Antriebstechnik GmbH
Hattingen

INDIA
Bonfiglioli Transmission Ltd.
Mobility & Wind Industries
Thirumudivakkam
Kancheepuram - Tamil Nadu

Industry & Automation Solutions
Mannur Village, Sriperumbudur Taluk
Kancheepuram - Tamil Nadu

Industry & Automation Solutions
Pune - Maharashtra

ITALY
Bonfiglioli Riduttori S.p.A.
Industry & Automation Solutions
Calderara di Reno (BO)

Industry & Automation Solutions
Carpiano

Mobility & Wind Industries
Forlì

Industry & Automation Solutions
Rovereto

Selcom Group S.p.A.
Castel Maggiore (BO)

Castel Maggiore (BO)

Cadriano (BO)

NEW ZEALAND
Bonfiglioli Transmission (Aust.) Pty Ltd
Auckland - Ellerslie

SINGAPORE
Bonfiglioli South East Asia Pte Ltd
Singapore

SLOVAKIA
Bonfiglioli Slovakia s.r.o.
Považská Bystrica

SOUTH AFRICA
Bonfiglioli South Africa Pty Ltd.
Johannesburg

SOUTH KOREA
Bonfiglioli Korea Co., Ltd.
Busan

SPAIN
Tecnotrans Bonfiglioli S.A
Castellbisbal - Barcelona

TURKEY
Bonfiglioli Türkiye Jsc
Çiğli - Izmir

UNITED KINGDOM
Bonfiglioli UK Ltd.
Warrington - Cheshire

USA
Bonfiglioli USA Inc.
Hebron - Kentucky

VIETNAM
Bonfiglioli Vietnam Co. Ltd.
Ben Cat city, Binh Duong province

PRODUCTION | ASSEMBLY | SALES | SERVICE

Bonfiglioli

We have a relentless commitment to excellence, innovation & sustainability. Our team creates, distributes and services world-class power transmission & drive solutions to keep the world in motion.

HEADQUARTERS

Bonfiglioli S.p.A.
Via Cav. Clementino Bonfiglioli, 1
40012 Calderara di Reno - Bologna (Italy)
Tel. +39 051 6473111