Bonfiglioli

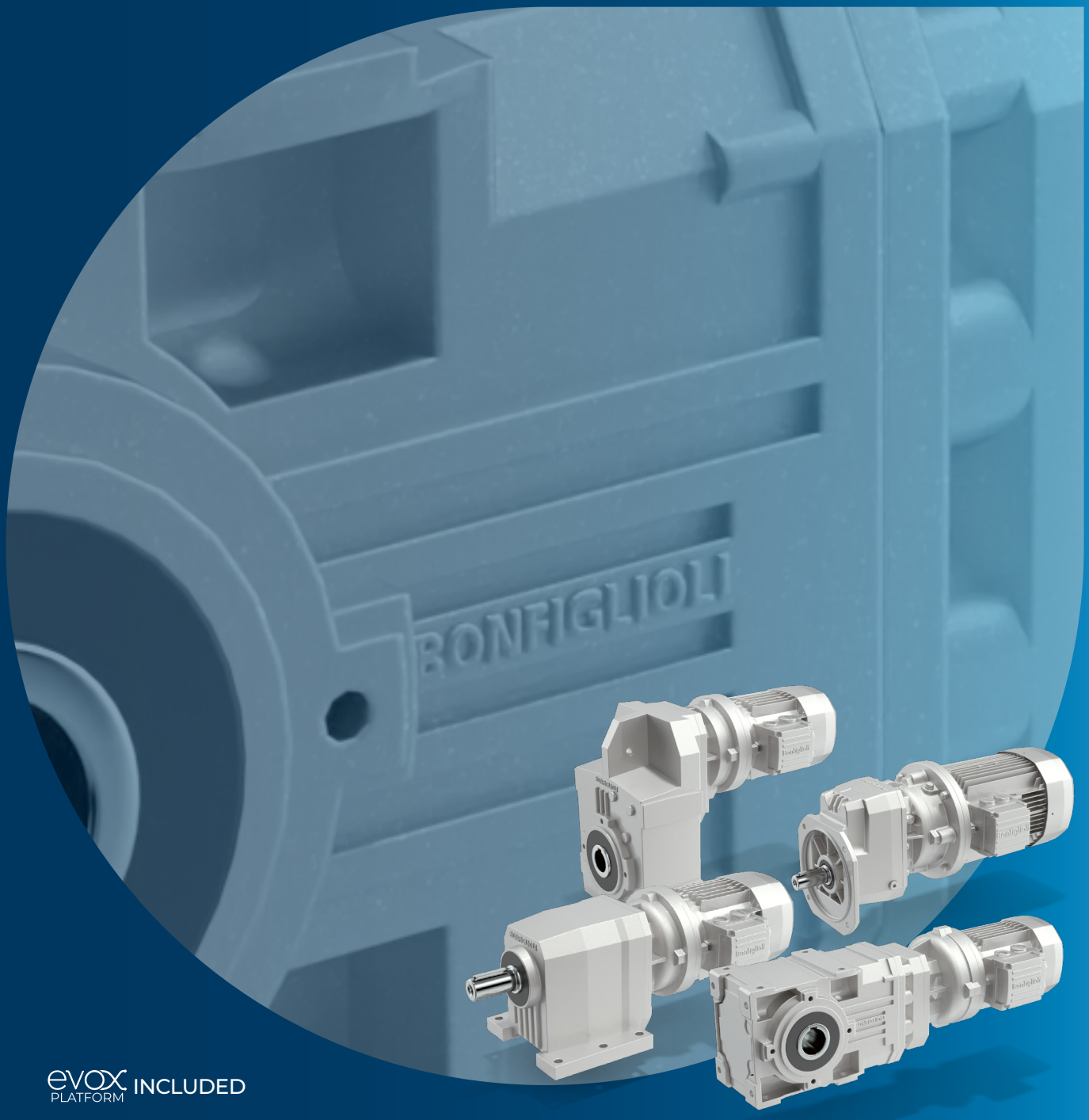

eVOX PLATFORM INCLUDED

C-A-F-S Series
IE2-IE3-IE4

Helical gear units C
Helical bevel gear units A Ex INCLUDED
Shaft mounted gear units F
Single stage gearboxes S

Have feedback on this document? Scan here.



Chapter	Description	Page
GENERAL INFORMATION		**2**
1	Symbols and units of measure	2
2	Allowed temperature limits	4
3	Torque	5
4	Power	5
5	Thermal capacity	6
6	Efficiency	7
7	Gear ratio	8
8	Angular velocity	8
9	Moment of inertia	8
10	Service factor	9
11	Lubrication	10
12	Selection	12
13	Verification	15
14	Installation	16
15	Installation instructions	17
16	Storage	18
17	Conditions of supply	18
18	Paint specifications	18
HELICAL GEAR UNITS SERIES C		**20**
19	Design features	20
20	Versions	21
21	Designation	22
22	Mounting position and terminal box orientation	28
23	Overhung loads	31
24	Thrust loads	34
25	Gearmotor rating charts	35
26	Gearbox rating charts	104
27	Motor availability	126
28	Moment of inertia	130
29	Exact ratios	149
30	Dimensions	151
HELICAL BEVEL GEAR UNITS SERIES A		**192**
31	Design features	192
32	Versions	193
33	Designation	194
34	Mounting position and terminal box angular position	203
35	Overhung loads	205
36	Thrust loads	208
37	Shafts arrangement	208
38	Gearmotor rating charts	209
39	Gearbox rating charts	270
40	Motor availability	292
41	Moment of inertia	296
42	Exact ratios	317
43	Dimensions	318
44	Gearboxes dimensions with torque arm	362
45	Gearboxes dimensions with protection cap	362
46	Customer' shaft	363
HELICAL BEVEL GEAR UNITS SERIES A ATEX CONFIGURATION		**366**
47	Introduction to the Atex directives	366
48	Selection	369
49	Installation, use and maintenance	371
50	Construction of Atex-specified equipment	371
51	Versions	372
52	Designation	373
53	Information about gearbox and gearmotor	374
SHAFT MOUNTED GEAR UNITS SERIES F		**376**
54	Design features	376
55	Versions	377
56	Designation	378
57	Mounting position and terminal box angular position	385
58	Overhung loads	387
59	Thrust loads	390
60	Gearmotor rating charts	391
61	Gearbox rating charts	444
62	Motor availability	464
63	Moment of inertia	468
64	Exact ratios	485
65	Dimensions	486
66	Accessories	523
67	Customer' shaft	524
SINGLE STAGE GEARBOXES SERIES S		**526**
68	Design features	526
69	Versions	527
70	Designation	528
71	Mounting position and terminal box angular position	534
72	Overhung loads	537
73	Thrust loads	539
74	Gearmotor rating charts	540
75	Gearbox rating charts	559
76	Motor availability	564
77	Moment of inertia	566
78	Dimensions	569
ELECTRIC MOTORS		**579**
M1	Symbols and units of measurement	579
M2	Introduction	580
M3	General characteristics	582
M4	Motor designation	584
M5	Variants and Options	590
M6	Mechanical features	592
M7	Electrical characteristics	598
M8	Brake motors - Direct current brake for BX-BE-BX | MX-ME-M	612
M9	Brake release systems	619
M10	Brake motors - Direct current high performance brake for BXN | MXN	621
M11	Options	627
M12	Tables of motors correlation	641
M13	Motor rating charts BXN-MXN	644
M14	Motors dimensions BXN-MXN	648
M15	Motor rating charts BY	656
M16	Motors dimensions BY	657
M17	Motor rating charts BX-MX	658
M18	Motors dimensions BX-MX	664
M19	Motor rating charts BE-ME	680
M20	Motors dimensions BE-ME	688
M21	Motor rating charts BN-M	696
M22	Motors dimensions BN-M	708

Revisions

Refer to page 716 for the catalogue revision index. Visit www.bonfiglioli.com to search for catalogues with up-to-date revisions.

1 SYMBOLS AND UNITS OF MEASURE

Symbols	Units of Measure	Description
$A_{N\ 1,2}$	[N]	Permissible axial force
f_s	–	Service factor
f_T	–	Thermal factor
f_{TP}	–	Temperature factor
i	–	Gear ratio
l	–	Cyclic duration factor
J_C	[Kgm^2]	Mass moment of inertia to be driven
J_M	[Kgm^2]	Motor mass moment of inertia
J_R	[Kgm^2]	Mass moment of inertia for the gear unit
K	–	Mass acceleration factor
K_r	–	Transmission element factor
$M_{1,2}$	[Nm]	Torque
$M_{c\ 1,2}$	[Nm]	Calculated torque
$M_{n\ 1,2}$	[Nm]	Rated torque
$M_{r\ 1,2}$	[Nm]	Torque demand
$n_{1,2}$	[min^{-1}]	Speed
$P_{1,2}$	[kW]	Power
$P_{N\ 1,2}$	[kW]	Rated power
$P_{R\ 1,2}$	[kW]	Power demand
$R_{C\ 1,2}$	[N]	Calculated radial force
$R_{N\ 1,2}$	[N]	Permissible overhung load
S	–	Safety factor
t_a	[°C]	Ambient temperature
t_s	[°C]	Surface temperature
t_o	[°C]	Oil temperature
t_f	[min]	Work time under constant load
t_r	[min]	Rest time
η_d	–	Dynamic efficiency
η_s	–	Static efficiency
φ	[']	Output shaft angular backlash (with locked input shaft)

$_1$ value applies to input shaft

$_2$ value applies to output shaft

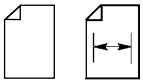

The symbol shows the page the information can be sorted from.



This symbol refers to the angle the overhung load applies (viewing from drive end).



Symbol refers to weight of gearmotors and speed reducers.
Figure for gearmotors incorporates the weight of the 4-pole motor and for life lubricated units, where applicable, the weight of the oil.



DANGER - WARNING
This symbol indicates situations of danger, which if ignored, may result in serious injury to the operator.



IMPORTANT
This symbol indicates important technical information.



Apply to equipment complying with “ATEX” Directive.

Series C	Series A	Series F	Series S	
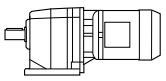	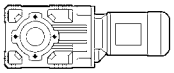	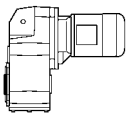	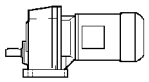	Gearmotor with compact motor.
		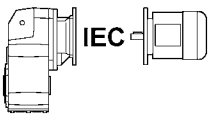	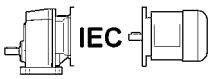	Gearmotor with IEC motor.
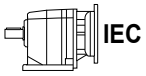	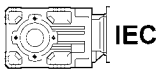	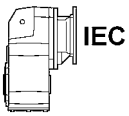		Gear unit with IEC motor interface.
		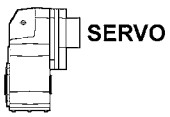		Gear unit with servomotor input adapter.
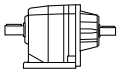	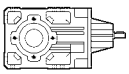	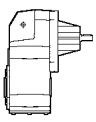	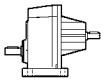	Speed reducer with solid input shaft.

2 ALLOWED TEMPERATURE LIMITS

Symbols	Description / Condition	Value (*)	
		Synthetic Oil	Mineral Oil
t_a	Ambient temperature		
$t_{au\ min}$	Minimum operating ambient temperature	**-30°C**	**-10°C**
$t_{au\ Max}$	Maximum operating ambient temperature	**+50°C**	**+40°C**
$t_{as\ min}$	Minimum storage ambient temperature	**-40°C**	**-10°C**
$t_{as\ Max}$	Maximum storage ambient temperature	**+50°C**	**+50°C**
t_s	Surface temperature		
$t_{s\ min}$	Minimum gearbox surface temperature starting with partial load (#)	**-25°C**	**-10°C**
$t_{sc\ min}$	Minimum gearbox surface temperature starting with full load	**-10°C**	**-5°C**
$t_{s\ Max}$	Maximum casing surface temperature during continuous operation (measured next to the gearbox input)	**+100°C**	**+100°C** (@)
t_o	Oil temperature		
$t_{o\ Max}$	Maximum oil temperature during continuous operation	**+95°C**	**+95°C** (@)

(*) = Refer to the table “Selection of the optimal oil viscosity” for further information about minimum and maximum values of different oil viscosity. For values of t_a < -20°C and t_s, t_o > 80 °C, choose (as permitted in the product configuration stage) the sealing type of the most suitable material to the type of application. If needed contact Bonfiglioli Technical Service.

(@) = Continuous operation it is not advised if t_s and t_o range is 80°C to 95 °C.

(#) = For full load start-up it is recommended to ramp-up and provide for greater absorption of the motor. If needed, contact Bonfiglioli Technical Service.

3 TORQUE

3.1 Rated torque M_{n2} [Nm]

The torque that can be transmitted continuously through the output shaft, with the gear unit operated under a service factor $f_s = 1$.
Rating is speed sensitive.

3.2 Required torque M_{r2} [Nm]

The torque demand based on application requirement.
It must always be equal to or less than torque M_{n2} the gearbox under study is rated for.

3.3 Calculated torque M_{c2} [Nm]

Computational torque value to be used when selecting the gearbox. It is calculated considering the required torque M_{r2} and service factor fs , as per the equation here after:

$$M_{c2} = M_{r2} \cdot f_s < M_{n2} \quad (1)$$

4 POWER

4.1 Rated power P_{n1} [kW]

In the gearbox selection charts this is the power applicable to input shaft, based on input speed n_1 and corresponding to service factor $f_s = 1$.

5 THERMAL CAPACITY P_t [kW]

The following indications are valid for C, F and S gearboxes. For the thermal verification of the A gearboxes, refer to the indications in paragraph 48 (valid both for standard and ATEX products).

P_t is the power that can be transmitted through the gear unit, under a continuous duty and an ambient temperature of 20 °C, without resulting into damage of the inner parts or degradation of the lubricant properties. Refer to chart (A1) for specific kW ratings.
In case of intermittent duty, or an operating ambient temperature other than the rated 20°C, the P_t value should be adjusted through the factor f_t , obtained from chart (A2), as per the following equation:
$P_t = P_t \times f_t$

Gear units featuring more than 2 reductions and/or a gear ratio greater than i = 45 do not normally require the thermal limit to be checked as in these cases the thermal rating usually exceeds the mechanical rating.

(A 1)

P_t [kW] 20 °C		
	n_1 = 1400 min^{-1}	n_1 = 2800 min^{-1}
C 05 2	—	—
C 12 2	—	—
C 22 2	—	—
C 32 2	—	4.5
C 36 2	6.5	5.0
C 41 2	8.0	6.0
C 51 2	11.0	7.8
C 61 2	14.0	10.0
C 70 2	21	16.0
C 80 2	32	24
C 90 2	43	32
C 100 2	59	42

P_t [kW] 20 °C		
	n_1 = 1400 min^{-1}	n_1 = 2800 min^{-1}
F 10 2	3.8	2.7
F 20 2	9.1	6.5
F 25 2	10.2	7.4
F 31 2	11.7	8.5
F 41 2	14.3	10.4
F 51 2	21.5	15.0
F 60 3	26.0	18.9
F 70 3	36.4	26.0
F 80 3	52	36
F 90 3	75	53

P_t [kW] 20 °C		
	n_1 = 1400 min^{-1}	n_1 = 2800 min^{-1}
S 10 1	5.5	4.9
S 20 1	7.8	7.2
S 30 1	10.0	9.1
S 40 1	15.6	14.3
S 50 1	21	18.9

(A 2)

f_t					
t_a [°C]	Continuous duty	Intermittent duty			
		Degree of intermittence [I]			
		80%	**60%**	**40%**	**20%**
40	0.80	1.1	1.3	1.5	1.6
30	0.85	1.3	1.5	1.6	1.8
20	1.0	1.5	1.6	1.8	2.0
10	1.15	1.6	1.8	2.0	2.3

Where cyclic duration factor (I)% is the relationship of operating time under load t_f to total time ($t_f + t_r$) expressed as a percentage.

$$I = \frac{t_f}{t_f + t_r} \cdot 100 \qquad (2)$$

The condition to be verified is:

$$P_{r1} \leq P_t \times f_t \qquad (3)$$

6 EFFICIENCY

6.1 Dynamic efficiency η_d

Obtained from the relationship of delivered power P_2 to input power P_1 , according to the following equation:

$$\eta_d = \frac{P_2}{P_1} \cdot 100 \quad [\%] \qquad (4)$$

(A 3)

	2 x	**3 x**	**4 x**
η_d	95%	93%	90%

	2 x	**3 x**	**4 x**
η_d	94%	91%	89%

	2 x	**3 x**	**4 x**
η_d	95%	93%	90%

	1 x
η_d	98%

7 GEAR RATIO i

The value for the gear ratio is referred to with the letter [i] and calculated through the relationship of the input speed n_1 to the output speed n_2:

$$i = \frac{n_1}{n_2} \quad (5)$$

The gear ratio is usually a decimal number which in this catalogue is truncated at one digit after the comma (no decimals for i > 1000).
If interested in knowing the exact value see also chapters “EXACT RATIOS”.

8 ANGULAR VELOCITY

8.1 Input speed n_1 [min-1]

The speed is related to the prime mover selected. Catalogue values refer to speed of either single or double speed motors that are common in the industry.
If the gearbox is driven by an external transmission it is recommended to operate it with a speed of 1400 min-1, or lower, in order to optimise operating conditions and lifetime.
Higher input speeds are permitted, however in this case consider that torque rating M_{n2} is affected adversely.
Please consult a Bonfiglioli representative.

8.2 Output speed n_2 [min-1]

The output speed value n_2 is calculated from the relationship of input speed n_1 to the gear ratio i, as per the following equation:

$$n_2 = \frac{n_1}{i} \quad (6)$$

9 MOMENT OF INERTIA J_r [Kgm2]

Moments of inertia specified in the catalogue refer to the gear unit input axis.
They are therefore related to motor speed, in the case of direct motor mounting.

10 SERVICE FACTOR f_S

This factor is the numeric value describing reducer service duty. It takes into consideration, with unavoidable approximation, daily operating conditions, load variations and overloads connected with reducer application.
In the graph (A4) below, after selecting proper “daily working hours” column, the service factor is given by intersecting the number of starts per hour and one of the K1, K2 or K3 curves. K_ curves are linked with the service nature (approximately: uniform, medium and heavy) through the acceleration factor of masses K, connected to the ratio between driven masses and motor inertia values.
Regardless of the value given for the service factor, we would like to remind that in some applications, which for example involve lifting of parts, failure of the reducer may expose the operators to the risk of injuries. If in doubt, please contact our Technical Service Department.

(A 4)

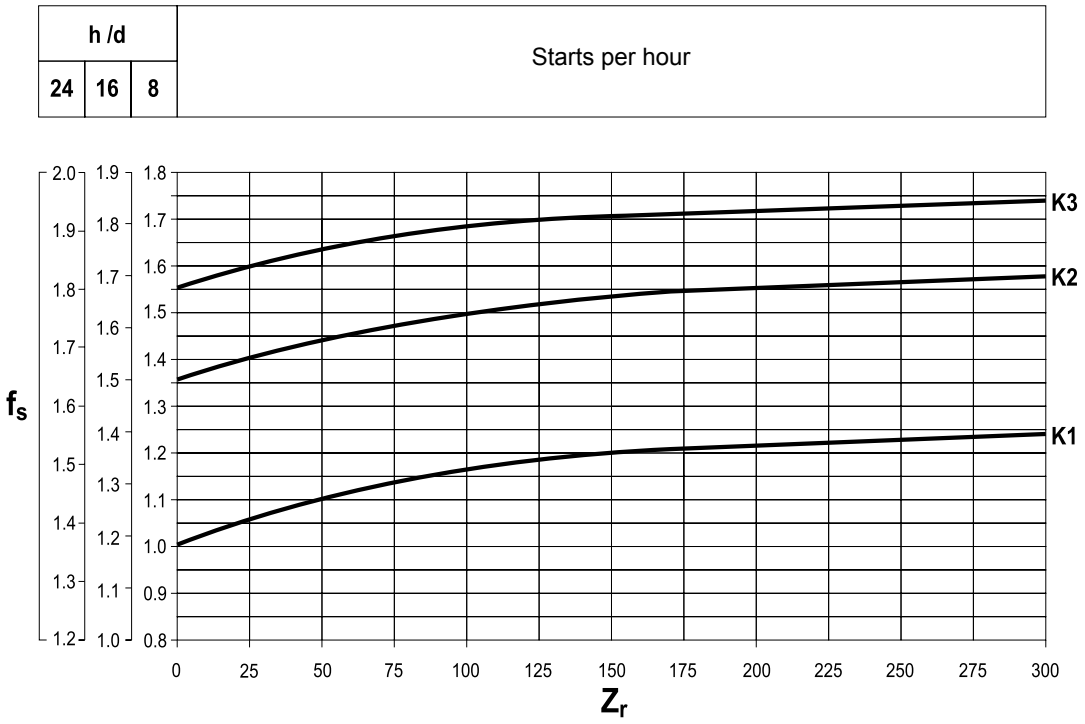

10.1 Acceleration factor of masses K

This parameter serves for selecting the right curve for the type of load.
The value is given by the following ratio:

(A 5)

$$K = \frac{J_c}{J_m} \rightarrow$$

J_c = Moment of inertia of driven masses referred to motor drive shaft

J_m = Motor moment of inertia

K ≤ 0,25	→ **K1**	Uniform load
0,25 < K ≤ 3	→ **K2**	Moderate shock load
3 < K ≤ 10	→ **K3**	Heavy shock load
K > 10	→	Please consult Bonfiglioli Technical Service

11 LUBRICATION

Life lubricated gearboxes do not require any periodical oil changes.
Refer to the User's Manual available at www.bonfiglioli.com for indications about checking the oil level and its replacement for other types of gearboxes.
Do not mix mineral oils with synthetic oils and/or different brands.
However, oil level should be checked at regular intervals and topped up as required.
Check monthly if unit operates under intermittent duty, more frequently if duty is continuous.

11.1 Selection of the optimal oil viscosity (data relating to Shell Oils)

(A 6)

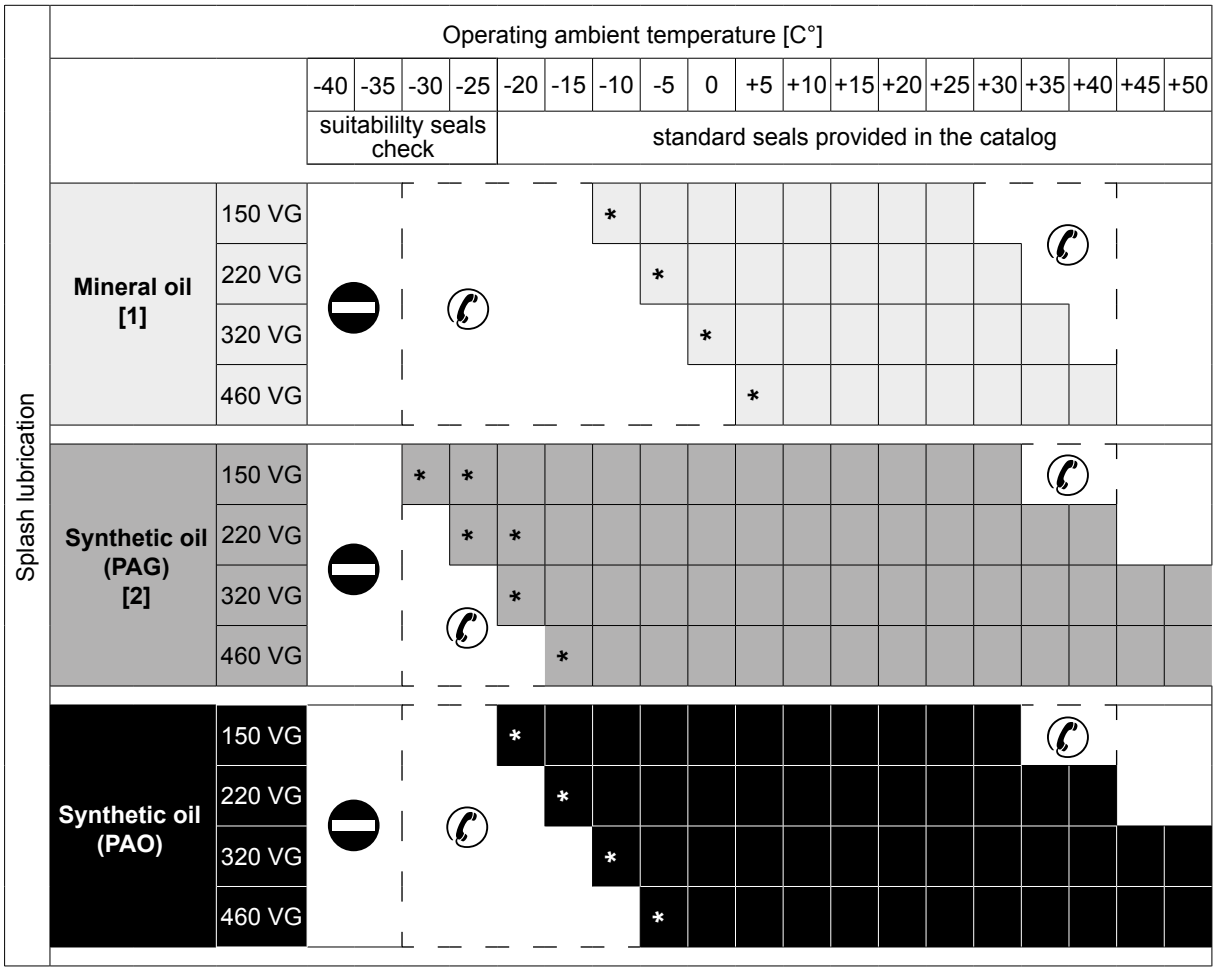

Recommended operating limits

Allowed operating limits.

Forbidden operating limits.

* = It is recommended to ramp-up and to provide for greater absorption of the motor.
If needed and in the event of impulse loads, contact Bonfiglioli Technical Service.

[1] The use of mineral oil is permitted on gearmotors with service factor fs ≥ 1.30

[2] Gearboxes A05…60 must be used with PAG oil strictly (suggested the viscosity 320).
For different needs please contact the technical service.

11.2 Lubrication for C, A, F, S series gearboxes

The inner parts of Bonfiglioli gear units are oil-bath and splash lubricated.
Frame sizes C 05...C 41, A 05...A 41, F 10...F 41, S 10...S 40 are supplied by the factory, or by the authorized dealers, already filled with oil.
Unless otherwise specified, units size C 51, A 50, F 51, S 50 and larger are usually supplied unlubricated at it will be the customer care to fill them with oil prior to putting them into operation.
In both cases, depending on the version, prior to putting the gear unit into operation may need to replace the closed plug used for transportation purposes with breather plug supplied with.
For the reference charts of oil plugs placement and quantity of lubricant, refer to the Installation, Operation and Maintenance Manual (available on www.bonfiglioli.com).
The “long life” poliglycol-based lubricant supplied by the factory (SHELL OMALA S4 WE 320), in the absence of contamination, does not require periodical oil changes throughout the lifetime of the gear unit.

11.3 Lubrication for A-EX (Atex) gearboxes

The inner parts of Bonfiglioli gear units are oil-bath and splash lubricated.
The ATEX version gear unit (with some exceptions see Table below) are factory-charged with “long-life” lubricant SHELL OMALA S4 WE 320 in the quantity suitable for the mounting position specified in the order.

(A 7)

A 05	A 10	A 20	A 30	A 35	A 41	A 50	A 55 [1)]	A 60 2 [2)]	A 60 3 [1)]	A 60 4 [1)]	A 70 [1)]	A 80 [1)]	A 90 [1)]

Gearbox pre-filled with a synthetic “for life” lubricant Gearbox pre-filled with a synthetic lubricant

(1) Without lubricant for mounting positions B6 and B7
(2) Without lubricant for mounting positions B6, B7 and VB

Gearboxes are fitted with sealed filler plugs for transport purposes. Depending on version, they may be supplied with a vented plug which the user must fit before putting the gearbox into service.
Refer to the installation, operation and maintenance manual to replace the filler plug correctly. (These manuals are available in a number of languages and can be downloaded in pdf format from the website www.bonfiglioli.com.)
When a gearbox is supplied with no lubricant, it is recommended to fill it with a lubricant of a similar type, selected from those listed in its installation, operation and maintenance manual.

12 SELECTION

Some fundamental data are necessary to assist the correct selection of a gearbox or gearmotor. The table below (A8) briefly sums up this information.
To simplify selection, fill in the table and send a copy to our Technical Service which will select the most suitable drive unit for your application.

(A 8)

Bonfiglioli power, control and green solutions	TECHNICAL DATA REQUIRED FOR THE SELECTION OF GEARBOXS SERIES ...	Nr:	
		Date:	
		Rev_	Date:

		A)	***GENERAL DATA***					
#	1		Company / Customer					
#	2		Contact					
#	3		Branch / Distributor					
#	4		Order quantity					
	5		Delivery time					
		B_1)	***ELECTRIC MOTOR***					
	6		Motor Type					
#	7	P_{n1}	Rated motor Power		[kW]			
#	8	P_{r1}	Motor power demand		[kW]			
	9	n_1	Input speed		[min^{-1}]			
	10		No. of Poles					
		C)	***GEARBOX***					
#	11		Gearbox configuration					
#	12	i	Gear ratio					
#	13	n_1	Input speed		[min^{-1}]			
#	14	M_{r2}	Output torque demand		[Nm]			
#	15	f_S	Service factor demand					
	16		Rotation of the output shaft [frontal view]:	**CW**	**CCW**			
#	17	L_{10H}	Bearings lifetime		[h]			
	18		Gears lifetime		[h]			
	19	SF_{min}	Safety for tooth root stress		standard reference (ISO preferred)			
	20	SH_{min}	Safety for flank pressure		standard reference (ISO preferred)			
		D)	***ADDITIONAL LOADS***					
	21	R_{c2}	Radial load on output shaft		[N]	Orientation [°]		
	22	x_2	Load application distance from shaft shoulder		[mm]			
	23	R_{c1}	Radial load on input shaft		[N]	Orientation [°]		
	24	x_1	Load application distance from shaft shoulder		[mm]			
	25	A_{n2}	Thrust load on output shaft (+ / -)		[N]	+ = push		
	26	A_{n1}	Thrust load on input shaft (+ / -)		[N]	- = pull		
		E)	***APPLICATION***					
#	27		Type of application					
	28		Duty cycle	Time phase	Gearbox output torque	Gearbox output speed		
				%	[Nm]	[min^{-1}]		
				,,,,	,,,,			
				,,,,	,,,,			
				,,,,	,,,,			
	29		Notes about Duty Cycle:					
	30		Rating according FEM class	T-	L-	M-		
	31		Degree of intermittence		[%]			
	32	t_a	Ambient temperature range		[°C]			
#	33		Altitude a.s.l.		[m]			
	34		Type of ambient	small indoor space	large indoor space	outdoor		
		F)	***NOTES***					
	35		Notes and additional Customer requirements:					

Mandatory for the selection

For the selection of Series A gear units in Atex configuration, see also the specific chapter on page 348.

12.1 Selection of a gearmotor

a) Determine service factor f_s according to type of duty (factor K), number of starts per hour Z_r and hours of operation.

b) From values of torque M_{r2}, speed n_2 and efficiency η_d the required input power can be calculated from the equation:

$$P_{r1} = \frac{M_{r2} \cdot n_2}{9550 \cdot \eta_d} \text{ [kW]} \quad (7)$$

Value of η_d for the captioned gear unit can be sorted out from paragraph 6.

c) Consult the gearmotor selection charts and locate the table corresponding to normalised power P_n:

$$P_n \geq P_{r1} \quad (8)$$

Unless otherwise specified, power P_n of motors indicated in the catalogue refers to continuous duty S1. For motors used in conditions other than S1, the type of duty required by reference to CEI 2-3/IEC 34-1 Standards must be mentioned.
For duties from S2 to S8 in particular and for motor frame 132 or smaller, extra power output can be obtained with respect to continuous duty.
Accordingly the following condition must be satisfied:

$$P_n \geq \frac{P_{r1}}{f_m} \quad (9)$$

The adjusting factor f_m can be obtained from table (A9).

12.2 Intermittence ratio

$$I = \frac{t_f}{t_f + t_r} \cdot 100 \quad (10)$$

t_f = work time at constant load
t_r = rest time

(A 9)

	DUTY						
	S2			**S3***			**S4 - S8**
	Cycle duration [min]			Cyclic duration factor (l)			Please contact us
	10	**30**	**60**	**25%**	**40%**	**70%**	
f_m	1.35	1.15	1.05	1.25	1.15	1.1	

* Cycle duration, in any event, must be 10 minutes or less. If it is longer, please contact our Technical Service.

Next, refer to the appropriate $\mathbf{P_n}$ section within the gearmotor selection charts and locate the unit that features the desired output speed $\mathbf{n_2}$, or closest to, along with a safety factor **S** that meets or exceeds the applicable service factor $\mathbf{f_s}$.

The safety factor is so defined:

$$S = \frac{M_{n2}}{M_2} = \frac{P_{n1}}{P_1} \quad (11)$$

As standard, gear and motor combinations are implemented with 2, 4 and 6 pole motors, 50 Hz supplied.
Should the drive speed be different from 2800, 1400 or 900 min^{-1}, base the selection on the gear unit nominal rating.

12.3 Selection of speed reducer and gearbox with IEC motor adapter

a) Determine service factor f_s.

b) Assuming the required output torque for the application M_{r2} is known, the calculation torque can be then defined as:

$$M_{c2} = M_{r2} \cdot f_s \quad (12)$$

c) The gear ratio is calculated according to requested output speed n_2 and drive speed n_1:

$$i = \frac{n_1}{n_2} \quad (13)$$

Once values for M_{c2} and i are known consult the rating charts under the appropriate input speed n_1 and locate the gear unit that features the gear ratio closest to [i] and at same time offers a rated torque value M_{n2} so that:

$$M_{n2} \geq M_{c2} \quad (14)$$

If a IEC normalized motor must be fitted check geometrical compatibility with the gear unit at paragraph “MOTOR AVAILABILITY”.

13 VERIFICATION

After the selection of the speed reducer, or gearmotor, is complete it is recommended that the following verifications are conducted:

a) Thermal capacity
Make sure that the thermal capacity of the gearbox is equal to or greater than the power required by the application according to equation (3) on page 7.
If this condition is not verified, select a larger gearbox or apply a forced cooling system.

b) Maximum torque
The maximum torque (intended as instantaneous peak load) applicable to the gearbox must not, in general, exceed 200% of rated torque M_{n2}. Therefore, check that this limit is not exceeded, using suitable torque limiting devices, if necessary.
For three-phase double speed motors, it is important to pay attention to the switching torque which is generated when switching from high to low speed, because it could be significantly higher than maximum torque.
A simple, economical way to minimize overloading is to power only two phases of the motor during switch-over (power-up time on two phases can be controlled with a time-relay):

$M_{g2} = 0.5 \cdot M_{g3}$
M_{g2} = Switching torque with two-phase power-up
M_{g3} = Switching torque with three-phase power-up

We recommend, in any event, to contact our Technical Service.

c) Radial loads
Make sure that radial forces applying on input and/or output shaft are within permittend catalogue values.
If they were higher consider designing a different bearing arrangement before switching to a larger gear unit.
Catalogue values for rated overhung loads refer to mid-point of shaft under study.
Should application point of the overhung load be localised further out the revised loading capability must be adjusted as per instructions given in this manual.
Please refer to the paragraphs relating to radial loads.

d) Thrust loads
Actual thrust load must be found within 20% of the equivalent overhung load capacity.
Should an extremely high, or a combination of radial and axial load apply, consult Bonfiglioli Technical Service.

e) Starts per hour
For duties featuring a high number of switches the actual starting capability in loaded condition [Z] must be calculated.
Actual number of starts per hour must be lower than value so calculated.

14 INSTALLATION

The following installation instructions must be observed:

a) Make sure that the gearbox is correctly secured to avoid vibrations.
If shocks or overloads are expected, install hydraulic couplings, clutches, torque limiters, etc.

b) Before being paint coated, the machined surfaces and the outer face of the oil seals must be protected to prevent paint drying out the rubber and jeopardising the sealing function.

c) Parts fitted on the gearbox output shaft must be machined to ISO H7 tolerance to prevent interference fits that could damage the gearbox itself.
Further, to mount or remove such parts, use suitable pullers or extraction devices using the tapped hole located at the top of the shaft extension.

d) Mating surfaces must be cleaned and treated with suitable protective products before mounting to avoid oxidation and, as a result, seizure of parts.

e) Prior to putting the gear unit into operation make sure that the equipment that incorporates the same complies with the current revision of the Machines Directive 2006/42/EC.

f) Before starting up the machine, make sure that oil level conforms to the mounting position specified for the gear unit and the viscosity is adequate (refer to the User's Manual available at www.bonfiglioli.com).

g) For outdoor installation provide adequate guards in order to protect the drive from rainfalls as well as direct sun radiation.

14.1 Fitting servomotors to gear heads featuring a clamping device (adapter type SC)

Turn the clamping device until its slot is aligned to those that are milled on the reducer input shaft. If the motor shaft features a key, this must be removed and the relevant keyway must also be aligned with the slots of clamping device and gear head input shaft, prior to inserting the servomotor into site. The keyway must be sitting on the same side as the locking screw. Tighten the bolts that hold the servomotor to the gear head, insert a torque wrench through the hole on the side of the flange and tighten the locking screw of the clamping device to the torque that is specified in the drawing section for the given adapter.

15 INSTALLATION INSTRUCTIONS

Schemes in table (A10) show the 3 possible installation patterns for A gear units to the machine frame. For each of these circumstances, table (A11) indicates exagonal head screw sizes to be used. Besides, to facilitate the installation, we suggest to use a wrench of the type shown in table (A10).

(A 10)

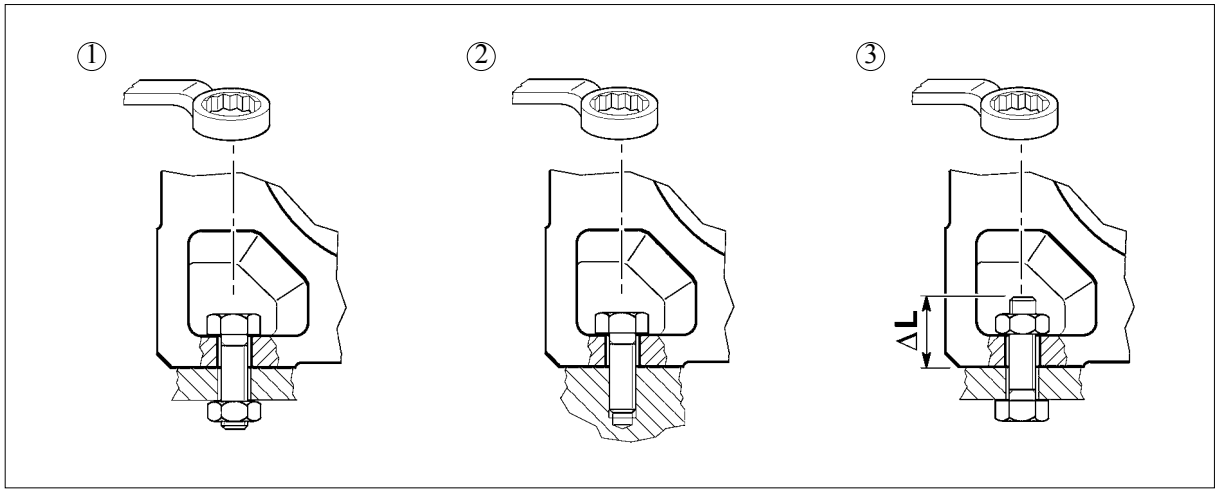

(A 11)

	Bolt type			
	①	②	③	**ΔL (mm)**
A 05	M8x22	M8x20	M8x ...	22
A 10	M8x25	M8x20	M8x …	20
A 20	M8x25	M8x20	M8x …	20
A 30	M10x30	M10x25	M10x …	25
A 35	M10x30	M10x25	M10x ...	25
A 41	M12x35	M12x30	M12x …	30

	Bolt type			
	①	②	③	**ΔL (mm)**
A 50	M14x45	M14x40	M14x …	35
A 55	M14x40	M14x40	M14x ...	35
A 60	M16x50	M16x45	M16x …	40
A 70	M20x60	M20x55	M20x …	45
A 80	M24x70	M24x65	M24x …	55
A 90	M24x90	M24x80	M24x …	65

16 STORAGE

Observe the following instructions to ensure correct storage of the products:

a) Do not store outdoors, in areas exposed to weather or with excessive humidity.

b) Always place boards, wood or other material between the products and the floor.
The gearboxes should not have direct contact with the floor.

c) In case of long-term storage all machined surfaces such as flanges, shafts and couplings must be coated with a suitable rust inhibiting product (Mobilarma 248 or equivalent).

d) In the cases of long-term storage defined in the order phase with the optional choice of SLM or SLP (see specific chapter for cases and times), the appropriate technical requirements are given in the User Manual available on www.bonfiglioli.com. To guarantee times, conditions and extensions, contact the Bonfiglioli Assistance Center available on the company website.

Furthermore gear units must be placed with the fill plug in the highest position and filled up with oil. Before putting the units into operation the appropriate quantity, and type, of oil must be restored (refer to the User's Manual available at www.bonfiglioli.com).

17 CONDITIONS OF SUPPLY

Gear units are supplied as follows:

a) configured for installation in the mounting position specified when ordering;

b) tested to manufacturer specifications;

c) mating machined surfaces come unpainted;

d) nuts and bolts for mounting motors are provided;

e) shafts are protected during transportation by plastic caps;

f) supplied with lifting lug (where applicable).

18 PAINT SPECIFICATIONS

Specifications for paint applied to gearboxes (where applicable) may be obtained from the branches or dealers that supplied the units.



19 DESIGN FEATURES

The main design characteristics are:
- modularity
- space effective
- universal mounting
- high efficiency
- quite operation
- gears in hardened and case-hardened steel
- bare aluminium housing for sizes 05, 12, 22 and 32. Larger frame sizes come in sturdy cast iron housings
- input and output shafts from high grade steel.

(B 12)

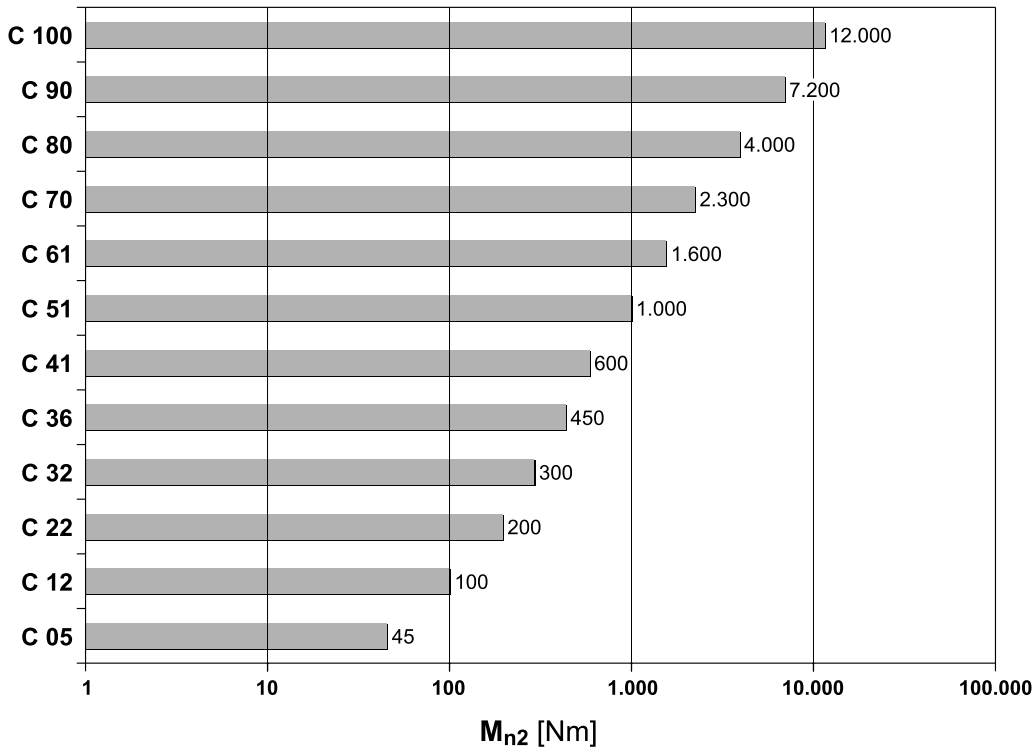

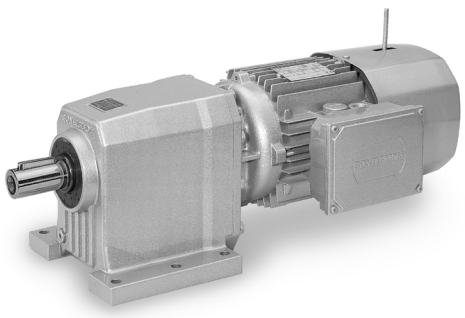

20 VERSIONS

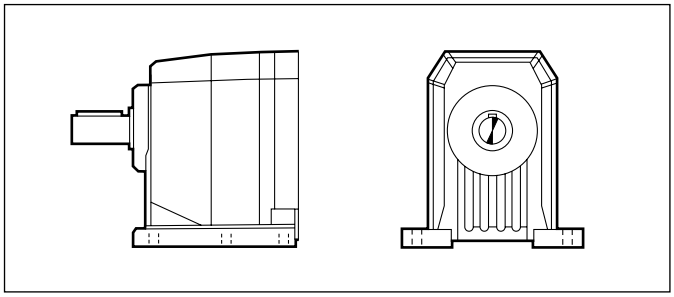

P

Foot mount

C 05 ... C 100

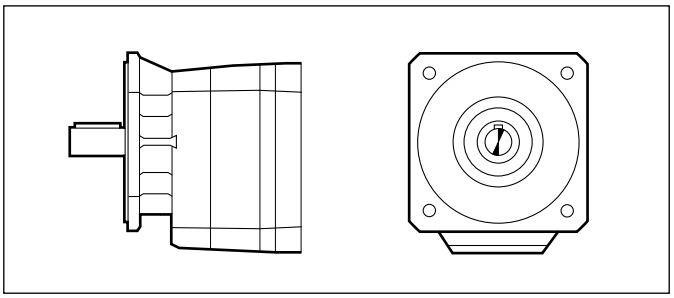

F

Flange mount

C 05 ... C 32
C 70 ... C 100

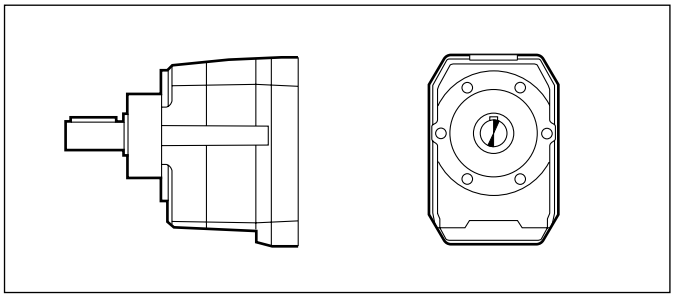

U

UNIBOX- universal housing

C 12 ... C 61

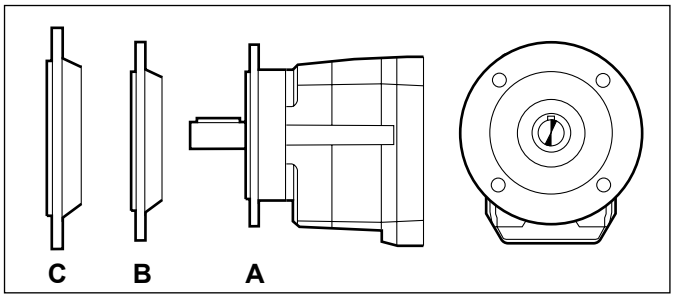

UF

UNIBOX bolt-on flange

C 12 ... C 61

21 DESIGNATION

GEAR UNIT

C 32 2 F 52.4 S1 B5 .....

OPTIONS

MOUNTING POSITION

C...P: **B3** (Standard), B6, B7, B8, V5, V6
C...F/U/UF: **B5** (Standard), B51, B53, B52, V1, V3

INPUT CONFIGURATION

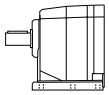
(C05...C100)

S05 ... S5

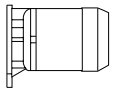

M - ME - MX - MXN

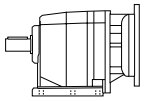
(C12...C100)

IEC_ **P63 ... P280**



BN - BE - BX - BXN

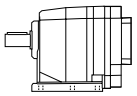
(C12...C61)

SK_
SC_

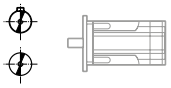

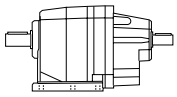
(C12...C100)

HS

GEAR RATIO

VERSION

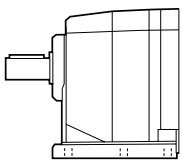
P
(C05...C100)

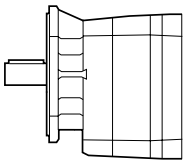
F
(C05...C32)
(C70...C100)

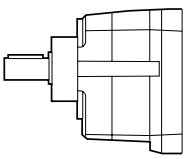
U
(C12...C61)

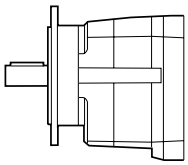
UFA
UFB
UFC
(C12...C61)

REDUCTIONS
2, **3**, **4**

GEAR FRAME SIZE
05, **12**, **22**, **32**, **36**, **41**, **51**, **61**, **70**, **80**, **90**, **100**

TYPE: **C** = helical in-line gear units

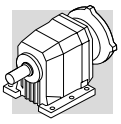

MOTOR BRAKE

M 1LA 4 230/400-50 IP54 CLF ..... **W FD** 7.5 R SB 220 SA .....

OPTIONS

BRAKE SUPPLY

RECTIFIER TYPE
AC/DC
NB, SB, NBR, SBR, NR, SR

BRAKE HAND RELEASE
R, **RM**

BRAKE TORQUE

BRAKE TYPE
FD (d.c. brake)
FDD (high performance d.c. brake)

TERMINAL BOX POSITION
W (default), **N**, **E**, **S**

MOTOR MOUNTING
— (compact motor)
B5 (IEC - motor)

INSULATION CLASS
CL F standard
CL H option

DEGREE OF PROTECTION
IP54, IP55, IP56

VOLTAGE - FREQUENCY
For BXN/MXN see the “Voltage & frequency” section on EVOX catalogue

POLE NUMBER
2, **4**, **6**

MOTOR SIZE
0B ... 5LA (compact motor)
63A ... 280SBK (IEC motor)

MOTOR TYPE
MX - MXN = compact 3-phase, class IE3
BX - BXN = IEC 3-phase, class IE3
BY = IEC 3-phase, class IE4
ME = compact 3-phase, class IE2
BE = IEC 3-phase, class IE2
M = compact 3-phase, class IE1
BN = IEC 3-phase, class IE1

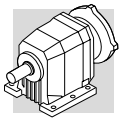

21,1 Gearbox options

LUBRICATION

Gearboxes C05, C12, C22, C32, C36 and C41, are usually factory filled with oil in the standard version. Gearboxes C51, C61, C70, C80, C90 and C100, are usually supplied unlubricated in the standard version.

However, for all sizes of gearbox factory filled with oil, it is possible to request the supply with more types of oil, selectable according to what is defined in the following table.

The option is not available for gearboxes C70, C80, C90, and C100 in mounting positions V6 and V3.

LUBRICATION	Type	Designation	Producer
LU	PolyAlfaOlefine (PAO)	OMALA S4 GX 150	
LY	PolyAlfaOlefine (PAO)	OMALA S4 GX 220	
LV	PolyAlfaOlefine (PAO)	OMALA S4 GX 320	
LW	PolyAlfaOlefine (PAO)	OMALA S4 GX 460	
LH	PolyGlicole (PAG)	OMALA S4 WE 150	
LS	PolyGlicole (PAG)	OMALA S4 WE 220	
LO*	PolyGlicole (PAG)	OMALA S4 WE 320	
LK	PolyGlicole (PAG)	OMALA S4 WE 460	
LN [1]	Mineral Base EP	OMALA S2 G 150	
LZ [1]	Mineral Base EP	OMALA S2 G 220	
LI [1]	Mineral Base EP	OMALA S2 G 320	
LJ [1]	Mineral Base EP	OMALA S2 G 460	
LA	Food grade	KLUBERSYNTH UH1 6-150	
LB	Food grade	KLUBERSYNTH UH1 6-220	
LC	Food grade	KLUBERSYNTH UH1 6-320	
LD	Food grade	KLUBERSYNTH UH1 6-460	

* unless otherwise specified, the gearboxes C05, C12, C22, C32, C36 e C41 supplied with lubricant use OMALA S4 WE 320 oil.

[1] The use of mineral oil is permitted on gearmotors with service factor fs ≥ 1.30

SO

Gear units C05, C12, C22, C32, C36, C41, usually factory filled with oil, to be supplied unlubricated.

DL

The output shaft features a dual oil seal.

DV

Dual oil seals on input shaft. (Only available for integral gearmotors).

VV

Fluoro elastomer oil seal on input shaft.

PV

Both input and output shafts feature Fluoro elastomer oil seals.

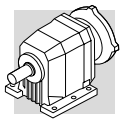

RB

Gear units C12, C22, C32, C36, C41, C51 and C61, usually supplied with standard values of angular backlash, are, in this case, supplied with reduced angular backlash values.
The following table specifies the corresponding figures of angular backlash.

(B 13)

		standard			RB	
C 05	i =	5.5 ; 9.3 ; 15.6 ; 27.1	6.7 ; 7.4 ; 11.2 ; 12.5 ; 18.9 ; 21.0 ; 32.8_44.7		—	
	φ [']	**34**	**29**			
C 12	i =	2.8_6.2	7.6_66.2		2.8_6.2	7.6_66.2
	φ [']	**55**	**29**		**—**	**13**
C 22	i =	2.7_6.1	7.1_261.0		2.7_6.1	7.1_261.0
	φ [']	**47**	**25**		**—**	**12**
C 32	i =	2.9_6.3	7.2_274.7		2.9_6.3	7.2_274.7
	φ [']	**39**	**21**		**—**	**11**
C 36	i =	2.7_5.8	6.8_19.0	22.1_848.5	2.7_5.8	6.8_848.5
	φ [']	**37**	**20**	**17**	**—**	**10**
C 41 2	i =	2.7_6.0	6.4_44.8	—	2.7_6.0	6.4_44.8
	φ [']	**34**	**17**		**—**	**9**
C 41 3/4	i =	**—**	**—**	28.5_855.5	**—**	28.5_855.5
	φ [']			**15**		**9**
C 51 2	i =	2.6_5.6	7.0_57.0	—	2.6_5.6	7.0_57.0
	φ [']	**32**	**15**		**—**	**8**
C 51 3/4	i =	**—**	**—**	21.8_884.9	**—**	21.8_884.9
	φ [']			**13**		**8**
C 61 2	i =	2.8_6.0	6.7_38.0	—	2.8_6.0	6.7_38.0
	φ [']	**27**	**13**		**12**	**7**
C 61 3/4	i =	**—**	**—**	26.8_796.1	**—**	26.8_796.1
	φ [']			**11**		**7**
C 70	i =	4.6_34.7	41.3_1476		—	
	φ [']	**18**	**20**			
C 80	i =	5.6_39.1	43.5_1481		—	
	φ [']	**16**	**18**			
C 90	i =	5.2_35.1	39.4_1240		—	
	φ [']	**16**	**18**			
C 100	i =	4.9_29.6	34.3_1081		—	
	φ [']	**14**	**16**			

For the delivery timeframe contact the Bonfiglioli's sales network

IHB

For applications where the Rated torque M_{n2} - Torque demand M_{r2} gearbox's ratio:

$$\frac{M_{n2}}{M_{r2}} \leq 1.5$$

some gearboxes can be requested with bearings with increased load ratings by specifying the **IHB** option in the order.
The **IHB** option is available for all gearboxes supplied with IEC motor adaptor: P160 - P180 - P200.
It is advisable to contact the Bonfiglioli Technical Service to verify the application.

BP

Gearboxes, usually supplied with open breather plug, are supplied with a valve breather plug. The calibration of the valve can vary from 0,10 to 0,15 bar depending on the plug type. The valve opens at intervals and allows venting of internal pressure keeping out foreign bodies.
For option availability see chapter "Mounting positions and service plugs" of the Installation, Operation and Maintenance Manual (available at: www.bonfiglioli.com).
If needed contact Bonfiglioli Technical Service.

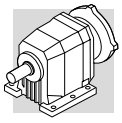

LONG TERM STOCK

In presence of Long Term Stock option the configured product is supplied without the standard lubricant oil but with an anticorrosive protective liquid to grant the integrity and full functionality of the gear unit in those cases where the unit will not be installed immediately but it has to be stocked for a long period of time (installation later than 6 months from delivery).

The warranty conditions are valid 12 months from commissioning (with commissioning within 24 months from delivery) or 24 months from delivery without commissioning. After 2 years of stock, the unit with SL option needs to be checked by Bonfiglioli assistance center. In case of a product that is not properly preserved, an offer by Bonfiglioli will be issued for a complete restore.

With the recovery activity successfully concluded, the warranty conditions restart from the 12 months of commissioning (with commissioning within 24 months from restore date) or 24 months from restore date

Applicability of Long Term Stock option:

Gearbox size	Applicability of Long Term Stock option
C12 ... C41	Only when oil lubrication options are not active (SO option is active)
C51 ... C100	Only when oil lubrication options are not active (LO, LH, LS, LK, LA, LB, LC, LD)

The Long Term Stock option can be requested in 2 versions:

- SLM Long Term Stock_Mineral Oil: option having anti-corrosive protective oil compatible with all mineral-based oil lubricants listed in the "Installation, operation and maintenance" Bonfiglioli manual (MUM).

- SLP Long Term Stock_Polyglycol Oil: option having anti-corrosive protective oil compatible with all polyglycol-based oil lubricants listed in the "Installation, operation and maintenance" Bonfiglioli manual (MUM).

Note: only one version can be selected. SLM and SLP can't coexist.

When configuring a gear unit or gearmotor with Long Term Stock option, it is necessary to know the type of lubricating oil that will be used by the customer during the operating period (mineral or polyglycol oil).

Before commissioning a Bonfiglioli product with Long Term Stock option, make sure that the lubricating oil filling activity takes place through the specific filling plug determined by the mounting position indicated on the plate.

With regards to gear units with lifetime lubrication (see table below), the quantity of lubricating oil to top up is not indicated in the relevant "installation, use and maintenance" Bonfiglioli manual. In this case, if the Long Term Stock option is active, it is therefore necessary to contact the Bonfiglioli assistance center to receive this information.

Gearbox size	Lubricant charge quantity
C12 ... C41	BONFIGLIOLI TECHNICAL SERVICE
C51 ... C100	

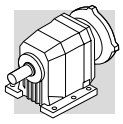

SURFACE PROTECTION

When no specific protection class is requested, the painted (ferrous) surfaces of gearboxes are protected to at least corrosivity class C2 (UNI EN ISO 12944-2). For improved resistance to atmospheric corrosion, gearboxes can be delivered with **C3** and **C4** surface protection, obtained by painting the complete gearbox.

(B 14)

SURFACE PROTECTION	Typical environments	Maximum surface temperature	Corrosivity class according to UNI EN ISO 12944-2
C3	Urban and industrial environments with up to 100% relative humidity (medium air pollution)	120°C	C3
C4	Industrial areas, coastal areas, chemical plant, with up to 100% relative humidity (high air pollution)	120°C	C4

Gearboxes with optional protection to class **C3** or **C4** are available in a choice of colours.
If no specific colour is requested (see the “PAINTING” option) gearboxes are finished in RAL 7042.
Gearboxes can also be supplied with surface protection for corrosivity class **C5** according to UNI EN ISO 12944-2. Contact our Technical Service for further details.

PAINTING

Gearboxes with optional protection to class C3 or C4 are available in the colours listed in the following table.

(B 15)

PAINTING	Colour	RAL number
RAL7042*	Traffik Grey A	7042
RAL5010	Gentian Blue	5010
RAL9005	Jet Black	9005
RAL9006	White Aluminium	9006
RAL9010	Pure White	9010
RAL7035	Light Grey	7035
RAL7001	Silver Grey	7001
RAL5015	Sky Blue	5015
RAL7037	Dusty Grey	7037
RAL5024	Pastel Blue	5024

* Gearboxes are supplied in this standard colour if no other colour is specified.

NOTE – “PAINTING” options can only be specified in conjunction with “SURFACE PROTECTION” options.

CERTIFICATES

AC - Certificate of compliance
The document certifies the compliance of the product with the purchase order and the construction in conformity with the applicable procedures of the Bonfiglioli Quality System.

CC - Inspection certificate
The document entails checking on order compliance, the visual inspection of external conditions and of mating dimensions. Checking on main functional parameters in unloaded conditions is also performed along with oil seal proofing, both in static and in running conditions. Units inspected are sampled within the shipping batch and marked individually.

21,2 Motor options

AL, AR
The backstop device is available as gearmotor option for M, ME and MX motors.
When ordering the gearmotor unit, the direction of free rotation must be specified through either the AR or the AL option. The following table (B16) supports the selection of AR or AL option, based on the desired direction of free rotation at the gearbox output shaft (clockwise or counter-clockwise).

(B 16)

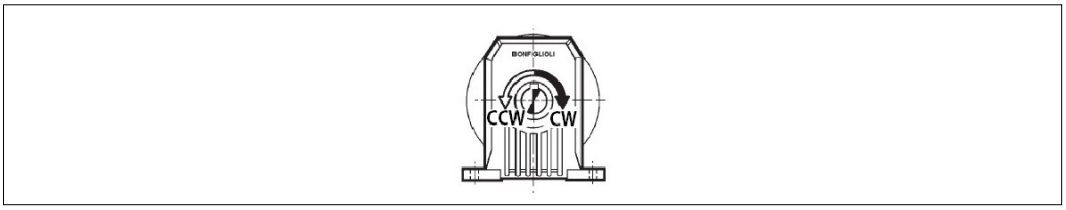

Option to select based on the required direction of free rotation at gearbox output shaft Valid for all Sizes. The table refers to the gearbox in mounting position B3. (CW: clockwise, CCW: counterclockwise)					
CW			**CCW**		
2x	**3x**	**4x**	**2x**	**3x**	**4x**
AR	AL	AR	AL	AR	AL

For further information on this option, consult the electric motors section.

22 MOUNTING POSITION AND TERMINAL BOX ORIENTATION

Location of motor terminal box can be specified by viewing the motor from the fan side; standard location is shown in black (W).

Angular position of the brake release lever.
Unless otherwise specified, brake motors have the manual device side located, 90° apart from terminal box. Different angles can be specified through the relevant options available.

(B 17)

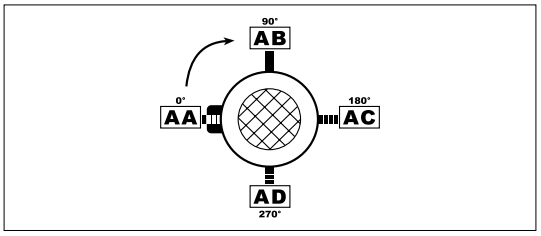

C ... P

B3

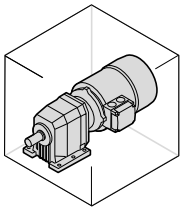
_S

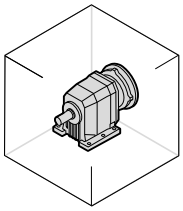
_P(IEC) _SK / _SC

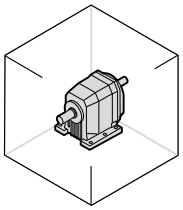
_HS

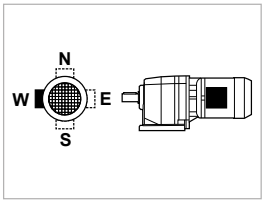

B6

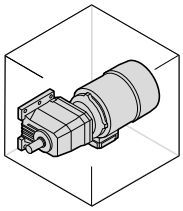
_S

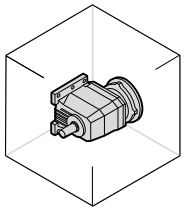
_P(IEC) _SK / _SC

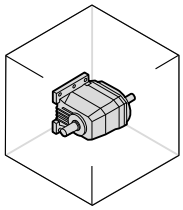
_HS

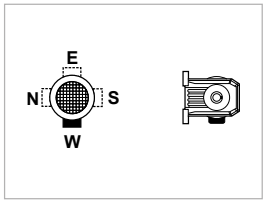

B7

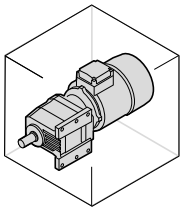
_S

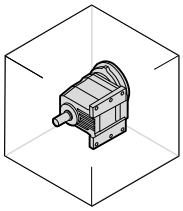
_P(IEC) _SK / _SC

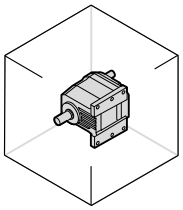
_HS

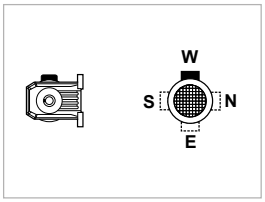

B8

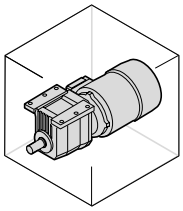
_S

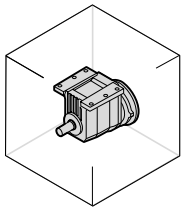
_P(IEC) _SK / _SC

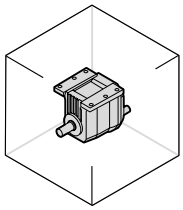
_HS

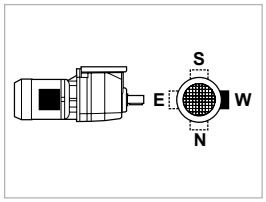

V5

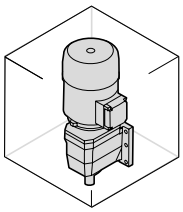
_S

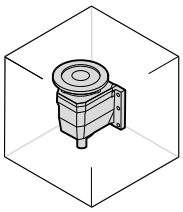
_P(IEC) _SK / _SC

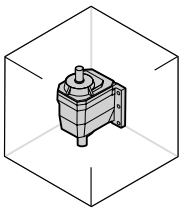
_HS

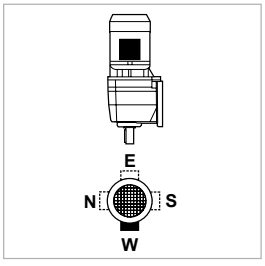

V6

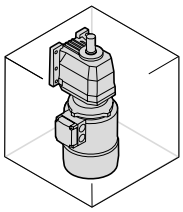
_S

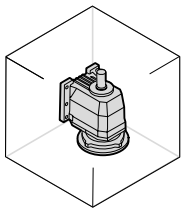
_P(IEC) _SK / _SC

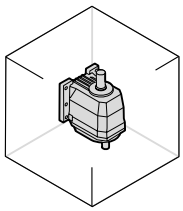
_HS

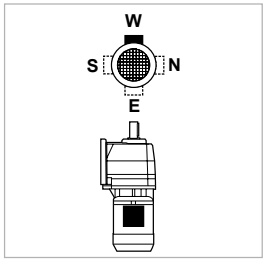

W = Default

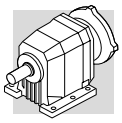

C ... F C ... U C ... UF

B5

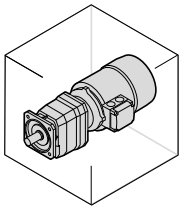

_S

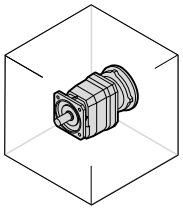

_P(IEC) _SK / _SC

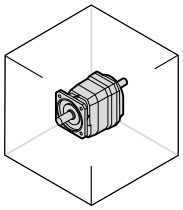

_HS

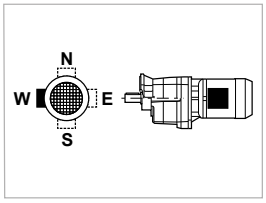

B51

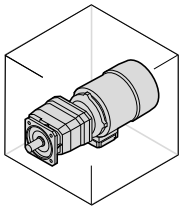

_S

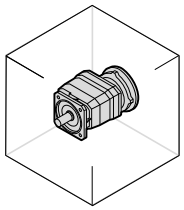

_P(IEC) _SK / _SC

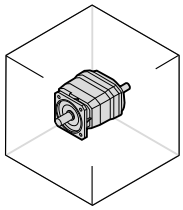

_HS

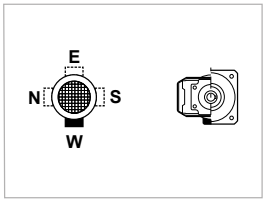

B53

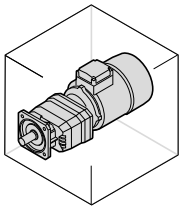

_S

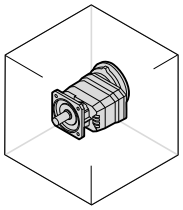

_P(IEC) _SK / _SC

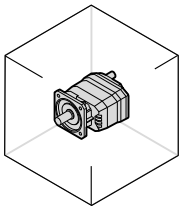

_HS

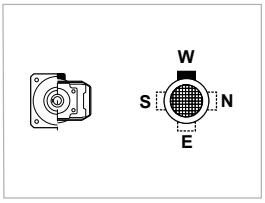

B52

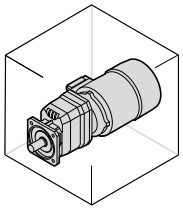

_S

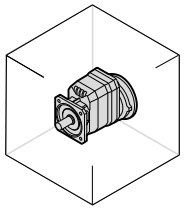

_P(IEC) _SK / _SC

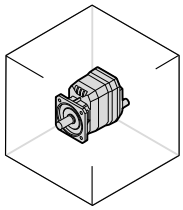

_HS

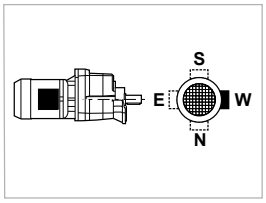

V1

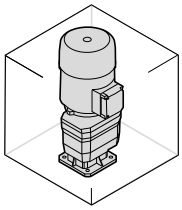

_S

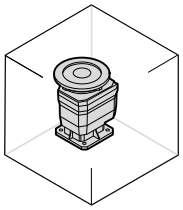

_P(IEC) _SK / _SC

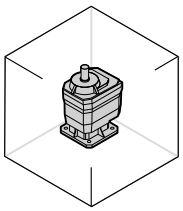

_HS

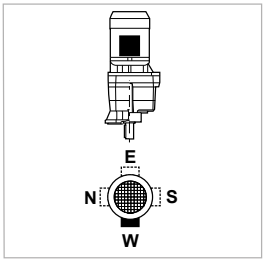

V3

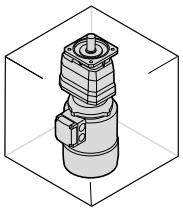

_S

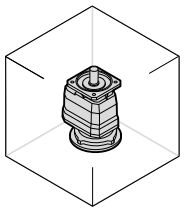

_P(IEC) _SK / _SC

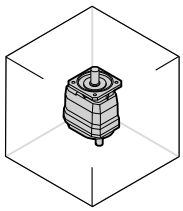

_HS

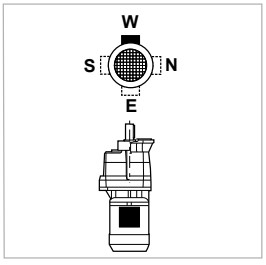

W = Default

23 OVERHUNG LOADS

External transmissions keyed onto input and/or output shaft generate loads that act radially onto same shaft.
Resulting shaft loading must be compatible with both the bearing and the shaft capacity. Namely shaft loading (R_{c1} for input shaft, R_{c2} for output shaft), must be equal or lower than admissible overhung load capacity for shaft under study (R_{n1} for input shaft, R_{n2} for output shaft). OHL capability listed in the rating chart section.
In the formulas given below, index (1) applies to parameters relating to input shaft, whereas index (2) refers to output shaft.
The load generated by an external transmission can be calculated with close approximation by the following equations:

$$R_{c1}\,[N] = \frac{2000 \cdot M_1[Nm] \cdot K_r}{d\,[mm]} \quad ; \quad R_{c2}\,[N] = \frac{2000 \cdot M_2[Nm] \cdot K_r}{d\,[mm]} \qquad (15)$$

(B 18)

M_1 [Nm]	Torque applied to input shaft
M_2 [Nm]	Torque drawn at output shaft
d [mm]	Pitch diameter of element keyed onto shaft
K_r = 1	Chain transmission

K_r = 1,25	Gear transmission
K_r = 1,5	V-belt transmission
K_r = 2,0	Flat belt transmission

Verification of OHL capability varies depending on whether load applies at midpoint of shaft or it is shifted further out:

(B 19)

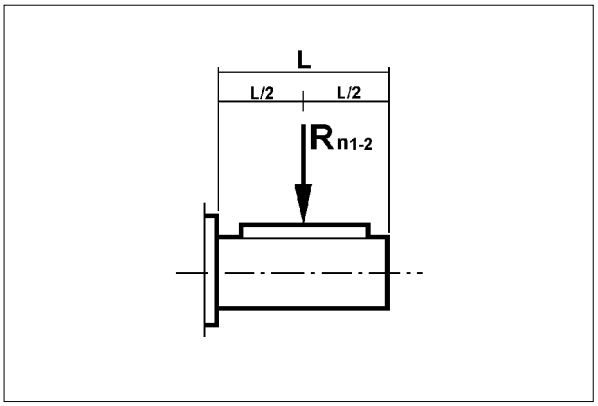

(B 20)

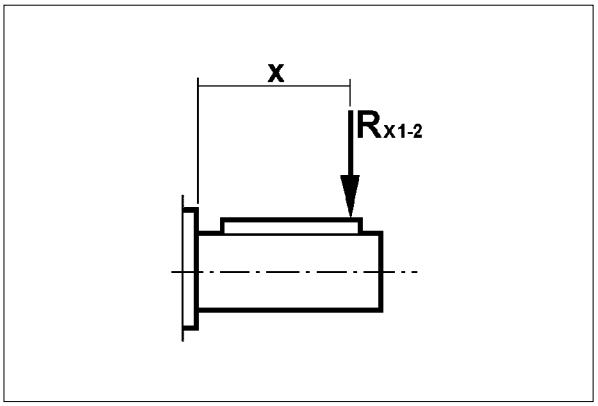

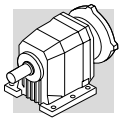

a) Load applied at midpoint of shaft, tab. (B19)

A comparison of shaft loading with catalogue OHL ratings should verify the following condition:

$R_{c1} \leq R_{n1}$ [input shaft]

or

$R_{c2} \leq R_{n2}$ [output shaft]

b) Load off the midpoint tab. (B20)

When load is shifted at an “x” distance from shaft shoulder, permissible load must be calculated for that distance.
Revised permissible overhung loads R_{x1} (input) and R_{x2} (output) are calculated respectively from original rated values R_{n1} and R_{n2} through factor:

$$\frac{a}{b+x} \qquad (16)$$

(B 21)

	Load location factors					
	Output shaft			Input shaft		
	a	**b**	**c**	**a**	**b**	**c**
C 05 2	38	18	250	—	—	—
C 12 2	46	26	450	21	1	300
C 22 2	53	28	550	40	20	350
C 22 3	53	28	550	21	1	300
C 32 2	60.5	30.5	750	41.5	21.5	350
C 32 3	60.5	30.5	750	21	1	300
C 36 2 - C 36 3	69.5	34.5	800	51.5	26.5	450
C 36 4	69.5	34.5	800	21	1	300
C 41 2 - C 41 3	69.5	34.5	850	51.5	26.5	450
C 41 4	69.5	34.5	850	40	20	350
C 51 2 - C 51 3	76.5	36.5	900	51.5	26.5	450
C 51 4	76.5	36.5	900	41.5	21.5	350
C 61 2 - C 61 3	95.5	45.5	1000	57.5	27.5	450
C 61 4	95.5	45.5	1000	51.5	26.5	450
C 70 2 - C 70 3	114	54	1200	86	31	1000
C 70 4	114	54	1200	49.5	24.5	450
C 80 2 - C 80 3	131	61	1500	86	31	1000
C 80 4	131	61	1500	49.5	24.5	450
C 90 2 - C 90 3	161	76	2000	116	46	1400
C 90 4	161	76	2000	49.5	24.5	450
C 100 2 - C 100 3	163.5	58.5	2500	116	46	1400
C 100 4	163.5	58.5	2500	49.5	24.5	450

Verification procedure is described here after.

INPUT SHAFT

1. Calculate:

$$R_{x1} = R_{n1} \cdot \frac{a}{b + x} \quad (17)$$

N.B. Subject to condition:

$$\frac{L}{2} \leq x \leq c \quad (18)$$

Finally, the following condition must be verified:

$$R_{c1} \leq R_{x1} \quad (19)$$

OUTPUT SHAFT

1. Calculate:

$$R_{x2} = R_{n2} \cdot \frac{a}{b + x} \quad (20)$$

N.B. Subject to condition:

$$\frac{L}{2} \leq x \leq c \quad (21)$$

Finally, the following condition must be verified:

$$R_{c2} \leq R_{x2} \quad (22)$$

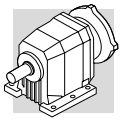

24 THRUST LOADS, A_{n1}, A_{n2}

Permissible thrust loads on input [A_{n1}] and output [A_{n2}] shafts are obtained from the radial loading for the shaft under consideration [R_{n1}] and [R_{n2}] through the following equation:

$$A_{n1} = R_{n1} \cdot 0.2$$
$$A_{n2} = R_{n2} \cdot 0.2 \qquad (23)$$

The thrust loads calculated through these formulas apply to thrust forces occurring at the same time as rated radial loads.
In the only case that no overhung load acts on the shaft the value of the admissible thrust load [A_n] amounts to 50% of rated OHL [R_n] on same shaft.
Where thrust loads exceed permissible value or largely prevail over radial loads, contact Bonfiglioli Riduttori for an in-depth analysis of the application.

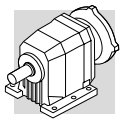

25 GEARMOTOR RATING CHARTS

0.12 kW

n_2 min^{-1}	M_2 Nm	S	i	R_{n2} N	IE2	IE3		IE2	IE3	
1.5	681	0.9	855.5	7000	**C414_855.5 S05 ME05A4**	**C414_855.5 S05 MX05A4**	171	**C414_855.5 P63 BE63A4**	**C414_855.5 P63 BX63A4**	172
1.6	643	1.6	808.0	10000				**C514_808.0 P63 BE63A4**	**C514_808.0 P63 BX63A4**	176
1.7	621	1.0	780.4	7000	**C414_780.4 S05 ME05A4**	**C414_780.4 S05 MX05A4**	171	**C414_780.4 P63 BE63A4**	**C414_780.4 P63 BX63A4**	172
1.8	586	1.0	735.9	7000	**C414_735.9 S05 ME05A4**	**C414_735.9 S05 MX05A4**	171	**C414_735.9 P63 BE63A4**	**C414_735.9 P63 BX63A4**	172
2.0	534	1.1	671.3	7000	**C414_671.3 S05 ME05A4**	**C414_671.3 S05 MX05A4**	171	**C414_671.3 P63 BE63A4**	**C414_671.3 P63 BX63A4**	172
2.0	509	0.9	665.9	6500	**C364_665.9 S05 ME05A4**	**C364_665.9 S05 MX05A4**	167	**C364_665.9 P63 BE63A4**	**C364_665.9 P63 BX63A4**	168
2.2	474	1.3	595.8	7000	**C414_595.8 S05 ME05A4**	**C414_595.8 S05 MX05A4**	171	**C414_595.8 P63 BE63A4**	**C414_595.8 P63 BX63A4**	172
2.3	440	1.0	574.7	6500	**C364_574.7 S05 ME05A4**	**C364_574.7 S05 MX05A4**	167	**C364_574.7 P63 BE63A4**	**C364_574.7 P63 BX63A4**	168
2.4	433	1.4	543.5	7000	**C414_543.5 S05 ME05A4**	**C414_543.5 S05 MX05A4**	171	**C414_543.5 P63 BE63A4**	**C414_543.5 P63 BX63A4**	172
2.6	396	1.1	517.2	6500	**C364_517.2 S05 ME05A4**	**C364_517.2 S05 MX05A4**	167	**C364_517.2 P63 BE63A4**	**C364_517.2 P63 BX63A4**	168
2.7	393	1.5	493.5	7000	**C414_493.5 S05 ME05A4**	**C414_493.5 S05 MX05A4**	171	**C414_493.5 P63 BE63A4**	**C414_493.5 P63 BX63A4**	172
2.9	351	1.3	458.4	6500	**C364_458.4 S05 ME05A4**	**C364_458.4 S05 MX05A4**	167	**C364_458.4 P63 BE63A4**	**C364_458.4 P63 BX63A4**	168
2.9	358	1.7	450.2	7000	**C414_450.2 S05 ME05A4**	**C414_450.2 S05 MX05A4**	171	**C414_450.2 P63 BE63A4**	**C414_450.2 P63 BX63A4**	172
3.1	333	1.8	418.5	7000	**C414_418.5 S05 ME05A4**	**C414_418.5 S05 MX05A4**	171	**C414_418.5 P63 BE63A4**	**C414_418.5 P63 BX63A4**	172
3.2	321	1.4	420.2	6500	**C364_420.2 S05 ME05A4**	**C364_420.2 S05 MX05A4**	167	**C364_420.2 P63 BE63A4**	**C364_420.2 P63 BX63A4**	168
3.4	304	2.0	381.8	7000	**C414_381.8 S05 ME05A4**	**C414_381.8 S05 MX05A4**	171	**C414_381.8 P63 BE63A4**	**C414_381.8 P63 BX63A4**	172
3.6	289	1.6	377.9	6500	**C364_377.9 S05 ME05A4**	**C364_377.9 S05 MX05A4**	167	**C364_377.9 P63 BE63A4**	**C364_377.9 P63 BX63A4**	168
3.9	265	2.3	333.4	7000	**C414_333.4 S05 ME05A4**	**C414_333.4 S05 MX05A4**	171	**C414_333.4 P63 BE63A4**	**C414_333.4 P63 BX63A4**	172
4.0	261	1.7	341.7	6500	**C364_341.7 S05 ME05A4**	**C364_341.7 S05 MX05A4**	167	**C364_341.7 P63 BE63A4**	**C364_341.7 P63 BX63A4**	168
4.2	244	1.8	318.9	6500	**C364_318.9 S05 ME05A4**	**C364_318.9 S05 MX05A4**	167	**C364_318.9 P63 BE63A4**	**C364_318.9 P63 BX63A4**	168
4.3	242	2.5	304.2	7000	**C414_304.2 S05 ME05A4**	**C414_304.2 S05 MX05A4**	171	**C414_304.2 P63 BE63A4**	**C414_304.2 P63 BX63A4**	172
4.6	223	2.0	290.9	6500	**C364_290.9 S05 ME05A4**	**C364_290.9 S05 MX05A4**	167	**C364_290.9 P63 BE63A4**	**C364_290.9 P63 BX63A4**	168
4.9	217	1.2	274.7	5500	**C323_274.7 S05 ME05A4**	**C323_274.7 S05 MX05A4**	163	**C323_274.7 P63 BE63A4**	**C323_274.7 P63 BX63A4**	164
5.0	209	2.9	263.0	7000	**C414_263.0 S05 ME05A4**	**C414_263.0 S05 MX05A4**	171	**C414_263.0 P63 BE63A4**	**C414_263.0 P63 BX63A4**	172
5.3	195	2.3	255.0	6500	**C364_255.0 S05 ME05A4**	**C364_255.0 S05 MX05A4**	167	**C364_255.0 P63 BE63A4**	**C364_255.0 P63 BX63A4**	168
5.5	193	1.3	244.2	5500	**C323_244.2 S05 ME05A4**	**C323_244.2 S05 MX05A4**	163	**C323_244.2 P63 BE63A4**	**C323_244.2 P63 BX63A4**	164
5.8	177	2.5	230.9	6500	**C364_230.9 S05 ME05A4**	**C364_230.9 S05 MX05A4**	167	**C364_230.9 P63 BE63A4**	**C364_230.9 P63 BX63A4**	168
6.0	178	1.0	225.8	5000	**C223_225.8 S05 ME05A4**	**C223_225.8 S05 MX05A4**	159	**C223_225.8 P63 BE63A4**	**C223_225.8 P63 BX63A4**	160
6.3	170	1.8	215.6	5500	**C323_215.6 S05 ME05A4**	**C323_215.6 S05 MX05A4**	163	**C323_215.6 P63 BE63A4**	**C323_215.6 P63 BX63A4**	164
6.5	163	2.8	206.4	6500	**C363_206.4 S05 ME05A4**	**C363_206.4 S05 MX05A4**	167	**C363_206.4 P63 BE63A4**	**C363_206.4 P63 BX63A4**	168
6.7	159	1.2	200.7	5000	**C223_200.7 S05 ME05A4**	**C223_200.7 S05 MX05A4**	159	**C223_200.7 P63 BE63A4**	**C223_200.7 P63 BX63A4**	160
7.3	147	2.0	186.0	5500	**C323_186.0 S05 ME05A4**	**C323_186.0 S05 MX05A4**	163	**C323_186.0 P63 BE63A4**	**C323_186.0 P63 BX63A4**	164
7.4	145	3.1	183.5	6500	**C363_183.5 S05 ME05A4**	**C363_183.5 S05 MX05A4**	167	**C363_183.5 P63 BE63A4**	**C363_183.5 P63 BX63A4**	168
7.6	141	1.4	178.5	5000	**C223_178.5 S05 ME05A4**	**C223_178.5 S05 MX05A4**	159	**C223_178.5 P63 BE63A4**	**C223_178.5 P63 BX63A4**	160
8.1	132	2.3	167.4	5500	**C323_167.4 S05 ME05A4**	**C323_167.4 S05 MX05A4**	163	**C323_167.4 P63 BE63A4**	**C323_167.4 P63 BX63A4**	164
8.9	120	1.7	151.7	5000	**C223_151.7 S05 ME05A4**	**C223_151.7 S05 MX05A4**	159	**C223_151.7 P63 BE63A4**	**C223_151.7 P63 BX63A4**	160
9.1	117	2.6	148.4	5500	**C323_148.4 S05 ME05A4**	**C323_148.4 S05 MX05A4**	163	**C323_148.4 P63 BE63A4**	**C323_148.4 P63 BX63A4**	164
9.9	108	1.9	136.5	5000	**C223_136.5 S05 ME05A4**	**C223_136.5 S05 MX05A4**	159	**C223_136.5 P63 BE63A4**	**C223_136.5 P63 BX63A4**	160
9.9	108	2.8	136.0	5500	**C323_136.0 S05 ME05A4**	**C323_136.0 S05 MX05A4**	163	**C323_136.0 P63 BE63A4**	**C323_136.0 P63 BX63A4**	164
11.0	97	3.1	122.4	5500	**C323_122.4 S05 ME05A4**	**C323_122.4 S05 MX05A4**	163	**C323_122.4 P63 BE63A4**	**C323_122.4 P63 BX63A4**	164
11.0	97	2.1	122.2	5000	**C223_122.2 S05 ME05A4**	**C223_122.2 S05 MX05A4**	159	**C223_122.2 P63 BE63A4**	**C223_122.2 P63 BX63A4**	160
12.1	89	2.3	112.0	5000	**C223_112.0 S05 ME05A4**	**C223_112.0 S05 MX05A4**	159	**C223_112.0 P63 BE63A4**	**C223_112.0 P63 BX63A4**	160
13.5	79	2.5	100.2	5000	**C223_100.2 S05 ME05A4**	**C223_100.2 S05 MX05A4**	159	**C223_100.2 P63 BE63A4**	**C223_100.2 P63 BX63A4**	160
15.3	70	2.9	88.5	5000	**C223_88.5 S05 ME05A4**	**C223_88.5 S05 MX05A4**	159	**C223_88.5 P63 BE63A4**	**C223_88.5 P63 BX63A4**	160
16.3	65	3.1	82.6	5000	**C223_82.6 S05 ME05A4**	**C223_82.6 S05 MX05A4**	159	**C223_82.6 P63 BE63A4**	**C223_82.6 P63 BX63A4**	160
20.4	53	1.7	66.2	2000	**C122_66.2 S05 ME05A4**	**C122_66.2 S05 MX05A4**	155	**C122_66.2 P63 BE63A4**	**C122_66.2 P63 BX63A4**	156
21.3	51	2.5	63.3	5000	**C222_63.3 S05 ME05A4**	**C222_63.3 S05 MX05A4**	159	**C222_63.3 P63 BE63A4**	**C222_63.3 P63 BX63A4**	160
24.5	45	2.0	55.2	2000	**C122_55.2 S05 ME05A4**	**C122_55.2 S05 MX05A4**	155	**C122_55.2 P63 BE63A4**	**C122_55.2 P63 BX63A4**	156

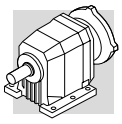

0.12 kW

n_2 min^{-1}	M_2 Nm	S	i	R_{n2} N	IE2	IE3		IE2	IEC IE3	
24.7	44	3.5	54.7	5000	**C222_54.7 S05 ME05A4**	**C222_54.7 S05 MX05A4**	159	**C222_54.7 P63 BE63A4**	**C222_54.7 P63 BX63A4**	160
28.4	38	2.3	47.6	2000	**C122_47.6 S05 ME05A4**	**C122_47.6 S05 MX05A4**	155	**C122_47.6 P63 BE63A4**	**C122_47.6 P63 BX63A4**	156
29.3	37	1.2	44.7	1010	**C052_44.7 S05 ME05A4**	**C052_44.7 S05 MX05A4**	154			
32.0	34	2.6	42.3	2000	**C122_42.3 S05 ME05A4**	**C122_42.3 S05 MX05A4**	155	**C122_42.3 P63 BE63A4**	**C122_42.3 P63 BX63A4**	156
33.0	34	1.3	40.3	990	**C052_40.3 S05 ME05A4**	**C052_40.3 S05 MX05A4**	154			
36.0	30	1.5	36.4	980	**C052_36.4 S05 ME05A4**	**C052_36.4 S05 MX05A4**	154			
36.0	30	3.0	37.0	2000	**C122_37.0 S05 ME05A4**	**C122_37.0 S05 MX05A4**	155	**C122_37.0 P63 BE63A4**	**C122_37.0 P63 BX63A4**	156
40.0	27	1.6	32.8	960	**C052_32.8 S05 ME05A4**	**C052_32.8 S05 MX05A4**	154			
41.0	26	3.4	32.8	2000	**C122_32.8 S05 ME05A4**	**C122_32.8 S05 MX05A4**	155	**C122_32.8 P63 BE63A4**	**C122_32.8 P63 BX63A4**	156
48.0	23	2.0	27.1	930	**C052_27.1 S05 ME05A4**	**C052_27.1 S05 MX05A4**	154			
62.0	18	2.6	21.0	890	**C052_21.0 S05 ME05A4**	**C052_21.0 S05 MX05A4**	154			
69.0	16	2.5	18.9	860	**C052_18.9 S05 ME05A4**	**C052_18.9 S05 MX05A4**	154			
84.0	13	3.1	15.6	820	**C052_15.6 S05 ME05A4**	**C052_15.6 S05 MX05A4**	154			
105.0	10	3.8	12.5	780	**C052_12.5 S05 ME05A4**	**C052_12.5 S05 MX05A4**	154			
117.0	9	4.3	11.2	760	**C052_11.2 S05 ME05A4**	**C052_11.2 S05 MX05A4**	154			
141.0	8	3.9	9.3	720	**C052_9.3 S05 ME05A4**	**C052_9.3 S05 MX05A4**	154			
177.0	6	4.8	7.4	680	**C052_7.4 S05 ME05A4**	**C052_7.4 S05 MX05A4**	154			
196.0	6	5.4	6.7	660	**C052_6.7 S05 ME05A4**	**C052_6.7 S05 MX05A4**	154			

0.12 kW

n_2 min^{-1}	M_2 Nm	S	i	R_{n2} N	IE3		IEC IE3	
1.5	681	0.9	855.5	7000	**C414_855.5 SX05 MXN05MA4**	171	**C414_855.5 P63 BXN63MA4**	172
1.6	643	1.6	808.0	10000			**C514_808.0 P63 BXN63MA4**	176
1.7	621	1.0	780.4	7000	**C414_780.4 SX05 MXN05MA4**	171	**C414_780.4 P63 BXN63MA4**	172
1.8	586	1.0	735.9	7000	**C414_735.9 SX05 MXN05MA4**	171	**C414_735.9 P63 BXN63MA4**	172
2.0	534	1.1	671.3	7000	**C414_671.3 SX05 MXN05MA4**	171	**C414_671.3 P63 BXN63MA4**	172
2.0	509	0.9	665.9	6500	**C364_665.9 SX05 MXN05MA4**	167	**C364_665.9 P63 BXN63MA4**	168
2.2	474	1.3	595.8	7000	**C414_595.8 SX05 MXN05MA4**	171	**C414_595.8 P63 BXN63MA4**	172
2.3	440	1.0	574.7	6500	**C364_574.7 SX05 MXN05MA4**	167	**C364_574.7 P63 BXN63MA4**	168
2.4	433	1.4	543.5	7000	**C414_543.5 SX05 MXN05MA4**	171	**C414_543.5 P63 BXN63MA4**	172
2.6	396	1.1	517.2	6500	**C364_517.2 SX05 MXN05MA4**	167	**C364_517.2 P63 BXN63MA4**	168
2.7	393	1.5	493.5	7000	**C414_493.5 SX05 MXN05MA4**	171	**C414_493.5 P63 BXN63MA4**	172
2.9	351	1.3	458.4	6500	**C364_458.4 SX05 MXN05MA4**	167	**C364_458.4 P63 BXN63MA4**	168
2.9	358	1.7	450.2	7000	**C414_450.2 SX05 MXN05MA4**	171	**C414_450.2 P63 BXN63MA4**	172
3.1	333	1.8	418.5	7000	**C414_418.5 SX05 MXN05MA4**	171	**C414_418.5 P63 BXN63MA4**	172
3.2	321	1.4	420.2	6500	**C364_420.2 SX05 MXN05MA4**	167	**C364_420.2 P63 BXN63MA4**	168
3.4	304	2.0	381.8	7000	**C414_381.8 SX05 MXN05MA4**	171	**C414_381.8 P63 BXN63MA4**	172
3.6	289	1.6	377.9	6500	**C364_377.9 SX05 MXN05MA4**	167	**C364_377.9 P63 BXN63MA4**	168
3.9	265	2.3	333.4	7000	**C414_333.4 SX05 MXN05MA4**	171	**C414_333.4 P63 BXN63MA4**	172
4.0	261	1.7	341.7	6500	**C364_341.7 SX05 MXN05MA4**	167	**C364_341.7 P63 BXN63MA4**	168
4.2	244	1.8	318.9	6500	**C364_318.9 SX05 MXN05MA4**	167	**C364_318.9 P63 BXN63MA4**	168
4.3	242	2.5	304.2	7000	**C414_304.2 SX05 MXN05MA4**	171	**C414_304.2 P63 BXN63MA4**	172

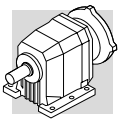

0.12 kW

n_2 min-1	M_2 Nm	S	i	R_{n2} N	IE3		IEC IE3	
4.6	223	2.0	290.9	6500	**C364_290.9 SX05 MXN05MA4**	167	**C364_290.9 P63 BXN63MA4**	168
4.9	217	1.2	274.7	5500	**C323_274.7 SX05 MXN05MA4**	163	**C323_274.7 P63 BXN63MA4**	164
5.0	209	2.9	263.0	7000	**C414_263.0 SX05 MXN05MA4**	171	**C414_263.0 P63 BXN63MA4**	172
5.3	195	2.3	255.0	6500	**C364_255.0 SX05 MXN05MA4**	167	**C364_255.0 P63 BXN63MA4**	168
5.5	193	1.3	244.2	5500	**C323_244.2 SX05 MXN05MA4**	163	**C323_244.2 P63 BXN63MA4**	164
5.8	177	2.5	230.9	6500	**C364_230.9 SX05 MXN05MA4**	167	**C364_230.9 P63 BXN63MA4**	168
6.0	178	1.0	225.8	5000	**C223_225.8 SX05 MXN05MA4**	159	**C223_225.8 P63 BXN63MA4**	160
6.3	170	1.8	215.6	5500	**C323_215.6 SX05 MXN05MA4**	163	**C323_215.6 P63 BXN63MA4**	164
6.5	163	2.8	206.4	6500			**C363_206.4 P63 BXN63MA4**	168
6.7	159	1.2	200.7	5000	**C223_200.7 SX05 MXN05MA4**	159	**C223_200.7 P63 BXN63MA4**	160
7.3	147	2.0	186.0	5500	**C323_186.0 SX05 MXN05MA4**	163	**C323_186.0 P63 BXN63MA4**	164
7.4	145	3.1	183.5	6500			**C363_183.5 P63 BXN63MA4**	168
7.6	141	1.4	178.5	5000	**C223_178.5 SX05 MXN05MA4**	159	**C223_178.5 P63 BXN63MA4**	160
8.1	132	2.3	167.4	5500	**C323_167.4 SX05 MXN05MA4**	163	**C323_167.4 P63 BXN63MA4**	164
8.9	120	1.7	151.7	5000	**C223_151.7 SX05 MXN05MA4**	159	**C223_151.7 P63 BXN63MA4**	160
9.1	117	2.6	148.4	5500	**C323_148.4 SX05 MXN05MA4**	163	**C323_148.4 P63 BXN63MA4**	164
9.9	108	1.9	136.5	5000	**C223_136.5 SX05 MXN05MA4**	159	**C223_136.5 P63 BXN63MA4**	160
9.9	108	2.8	136.0	5500	**C323_136.0 SX05 MXN05MA4**	163	**C323_136.0 P63 BXN63MA4**	164
11.0	97	3.1	122.4	5500	**C323_122.4 SX05 MXN05MA4**	163	**C323_122.4 P63 BXN63MA4**	164
11.0	97	2.1	122.2	5000	**C223_122.2 SX05 MXN05MA4**	159	**C223_122.2 P63 BXN63MA4**	160
12.1	89	2.3	112.0	5000	**C223_112.0 SX05 MXN05MA4**	159	**C223_112.0 P63 BXN63MA4**	160
13.5	79	2.5	100.2	5000	**C223_100.2 SX05 MXN05MA4**	159	**C223_100.2 P63 BXN63MA4**	160
15.3	70	2.9	88.5	5000	**C223_88.5 SX05 MXN05MA4**	159	**C223_88.5 P63 BXN63MA4**	160
16.3	65	3.1	82.6	5000	**C223_82.6 SX05 MXN05MA4**	159	**C223_82.6 P63 BXN63MA4**	160
20.4	53	1.7	66.2	2000	**C122_66.2 SX05 MXN05MA4**	155	**C122_66.2 P63 BXN63MA4**	156
21.3	51	2.5	63.3	5000	**C222_63.3 SX05 MXN05MA4**	159	**C222_63.3 P63 BXN63MA4**	160
24.5	45	2.0	55.2	2000	**C122_55.2 SX05 MXN05MA4**	155	**C122_55.2 P63 BXN63MA4**	156
24.7	44	3.5	54.7	5000	**C222_54.7 SX05 MXN05MA4**	159	**C222_54.7 P63 BXN63MA4**	160
28.4	38	2.3	47.6	2000	**C122_47.6 SX05 MXN05MA4**	155	**C122_47.6 P63 BXN63MA4**	156
32.0	34	2.6	42.3	2000	**C122_42.3 SX05 MXN05MA4**	155	**C122_42.3 P63 BXN63MA4**	156
36.0	30	3.0	37.0	2000	**C122_37.0 SX05 MXN05MA4**	155	**C122_37.0 P63 BXN63MA4**	156
41.0	26	3.4	32.8	2000	**C122_32.8 SX05 MXN05MA4**	155	**C122_32.8 P63 BXN63MA4**	156

0.18 kW

n_2 min-1	M_2 Nm	S	i	R_{n2} N	IE2	IE3		IEC IE2	IEC IE3	
1.5	1049	1.0	884.9	10000				**C514_884.9 P63 BE63B4**	**C514_884.9 P63 BX63B4**	176
1.6	958	1.0	808.0	10000				**C514_808.0 P63 BE63B4**	**C514_808.0 P63 BX63B4**	176
1.8	861	1.9	726.3	16000				**C614_726.3 P63 BE63B4**	**C614_726.3 P63 BX63B4**	180
1.8	851	1.2	717.7	10000				**C514_717.7 P63 BE63B4**	**C514_717.7 P63 BX63B4**	176
2.0	796	0.8	671.3	7000	**C414_671.3 S05 ME05B4**	**C414_671.3 S05 MX05B4**	171	**C414_671.3 P63 BE63B4**	**C414_671.3 P63 BX63B4**	172

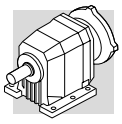

0.18 kW

n_2 min-1	M_2 Nm	S	i	R_{n2} N	IE2	IE3		IEC IE2	IEC IE3	
2.0	777	1.3	655.4	10000				**C514_655.4 P63 BE63B4**	**C514_655.4 P63 BX63B4**	176
2.2	706	0.8	595.8	7000	**C414_595.8 S05 ME05B4**	**C414_595.8 S05 MX05B4**	171	**C414_595.8 P63 BE63B4**	**C414_595.8 P63 BX63B4**	172
2.4	644	0.9	543.5	7000	**C414_543.5 S05 ME05B4**	**C414_543.5 S05 MX05B4**	171	**C414_543.5 P63 BE63B4**	**C414_543.5 P63 BX63B4**	172
2.7	585	1.0	493.5	7000	**C414_493.5 S05 ME05B4**	**C414_493.5 S05 MX05B4**	171	**C414_493.5 P63 BE63B4**	**C414_493.5 P63 BX63B4**	172
2.9	534	1.1	450.2	7000	**C414_450.2 S05 ME05B4**	**C414_450.2 S05 MX05B4**	171	**C414_450.2 P63 BE63B4**	**C414_450.2 P63 BX63B4**	172
2.9	536	0.8	458.4	6500	**C364_458.4 S05 ME05B4**	**C364_458.4 S05 MX05B4**	167	**C364_458.4 P63 BE63B4**	**C364_458.4 P63 BX63B4**	168
3.1	492	0.9	420.2	6500	**C364_420.2 S05 ME05B4**	**C364_420.2 S05 MX05B4**	167	**C364_420.2 P63 BE63B4**	**C364_420.2 P63 BX63B4**	168
3.2	496	1.2	418.5	7000	**C414_418.5 S05 ME05B4**	**C414_418.5 S05 MX05B4**	171	**C414_418.5 P63 BE63B4**	**C414_418.5 P63 BX63B4**	172
3.5	452	1.3	381.8	7000	**C414_381.8 S05 ME05B4**	**C414_381.8 S05 MX05B4**	171	**C414_381.8 P63 BE63B4**	**C414_381.8 P63 BX63B4**	172
3.5	442	1.0	377.9	6500	**C364_377.9 S05 ME05B4**	**C364_377.9 S05 MX05B4**	167	**C364_377.9 P63 BE63B4**	**C364_377.9 P63 BX63B4**	168
3.9	400	1.1	341.7	6500	**C364_341.7 S05 ME05B4**	**C364_341.7 S05 MX05B4**	167	**C364_341.7 P63 BE63B4**	**C364_341.7 P63 BX63B4**	168
4.0	395	1.5	333.4	7000	**C414_333.4 S05 ME05B4**	**C414_333.4 S05 MX05B4**	171	**C414_333.4 P63 BE63B4**	**C414_333.4 P63 BX63B4**	172
4.1	373	1.2	318.9	6500	**C364_318.9 S05 ME05B4**	**C364_318.9 S05 MX05B4**	167	**C364_318.9 P63 BE63B4**	**C364_318.9 P63 BX63B4**	168
4.3	360	1.7	304.2	7000	**C414_304.2 S05 ME05B4**	**C414_304.2 S05 MX05B4**	171	**C414_304.2 P63 BE63B4**	**C414_304.2 P63 BX63B4**	172
4.5	340	1.3	290.9	6500	**C364_290.9 S05 ME05B4**	**C364_290.9 S05 MX05B4**	167	**C364_290.9 P63 BE63B4**	**C364_290.9 P63 BX63B4**	168
5.0	312	1.9	263.0	7000	**C414_263.0 S05 ME05B4**	**C414_263.0 S05 MX05B4**	171	**C414_263.0 P63 BE63B4**	**C414_263.0 P63 BX63B4**	172
5.2	298	1.5	255.0	6500	**C364_255.0 S05 ME05B4**	**C364_255.0 S05 MX05B4**	167	**C364_255.0 P63 BE63B4**	**C364_255.0 P63 BX63B4**	168
5.4	295	0.9	244.2	5500	**C323_244.2 S05 ME05B4**	**C323_244.2 S05 MX05B4**	163	**C323_244.2 P63 BE63B4**	**C323_244.2 P63 BX63B4**	164
5.7	270	1.7	230.9	6500	**C364_230.9 S05 ME05B4**	**C364_230.9 S05 MX05B4**	167	**C364_230.9 P63 BE63B4**	**C364_230.9 P63 BX63B4**	168
6.1	261	1.2	215.6	5500	**C323_215.6 S05 ME05B4**	**C323_215.6 S05 MX05B4**	163	**C323_215.6 P63 BE63B4**	**C323_215.6 P63 BX63B4**	164
6.4	250	1.8	206.4	6500	**C363_206.4 S05 ME05B4**	**C363_206.4 S05 MX05B4**	167	**C363_206.4 P63 BE63B4**	**C363_206.4 P63 BX63B4**	168
7.1	225	1.3	186.0	5500	**C323_186.0 S05 ME05B4**	**C323_186.0 S05 MX05B4**	163	**C323_186.0 P63 BE63B4**	**C323_186.0 P63 BX63B4**	164
7.2	222	2.0	183.5	6500	**C363_183.5 S05 ME05B4**	**C363_183.5 S05 MX05B4**	167	**C363_183.5 P63 BE63B4**	**C363_183.5 P63 BX63B4**	168
7.4	216	0.9	178.5	5000	**C223_178.5 S05 ME05B4**	**C223_178.5 S05 MX05B4**	159	**C223_178.5 P63 BE63B4**	**C223_178.5 P63 BX63B4**	160
7.9	202	1.5	167.4	5500	**C323_167.4 S05 ME05B4**	**C323_167.4 S05 MX05B4**	163	**C323_167.4 P63 BE63B4**	**C323_167.4 P63 BX63B4**	164
8.1	196	2.3	162.0	6500	**C363_162.0 S05 ME05B4**	**C363_162.0 S05 MX05B4**	167	**C363_162.0 P63 BE63B4**	**C363_162.0 P63 BX63B4**	168
8.7	183	1.1	151.7	5000	**C223_151.7 S05 ME05B4**	**C223_151.7 S05 MX05B4**	159	**C223_151.7 P63 BE63B4**	**C223_151.7 P63 BX63B4**	160
8.9	179	1.7	148.4	5500	**C323_148.4 S05 ME05B4**	**C323_148.4 S05 MX05B4**	163	**C323_148.4 P63 BE63B4**	**C323_148.4 P63 BX63B4**	164
9.4	169	2.7	139.8	6500	**C363_139.8 S05 ME05B4**	**C363_139.8 S05 MX05B4**	167	**C363_139.8 P63 BE63B4**	**C363_139.8 P63 BX63B4**	168
9.7	165	1.2	136.5	5000	**C223_136.5 S05 ME05B4**	**C223_136.5 S05 MX05B4**	159	**C223_136.5 P63 BE63B4**	**C223_136.5 P63 BX63B4**	160
9.7	164	1.8	136.0	5500	**C323_136.0 S05 ME05B4**	**C323_136.0 S05 MX05B4**	163	**C323_136.0 P63 BE63B4**	**C323_136.0 P63 BX63B4**	164
10.5	152	3.0	125.8	6500	**C363_125.8 S05 ME05B4**	**C363_125.8 S05 MX05B4**	167	**C363_125.8 P63 BE63B4**	**C363_125.8 P63 BX63B4**	168
10.8	148	2.0	122.4	5500	**C323_122.4 S05 ME05B4**	**C323_122.4 S05 MX05B4**	163	**C323_122.4 P63 BE63B4**	**C323_122.4 P63 BX63B4**	164
10.8	148	1.4	122.2	5000	**C223_122.2 S05 ME05B4**	**C223_122.2 S05 MX05B4**	159	**C223_122.2 P63 BE63B4**	**C223_122.2 P63 BX63B4**	160
11.8	135	1.5	112.0	5000	**C223_112.0 S05 ME05B4**	**C223_112.0 S05 MX05B4**	159	**C223_112.0 P63 BE63B4**	**C223_112.0 P63 BX63B4**	160
11.8	135	3.3	111.5	6500	**C363_111.5 S05 ME05B4**	**C363_111.5 S05 MX05B4**	167	**C363_111.5 P63 BE63B4**	**C363_111.5 P63 BX63B4**	168
11.9	134	2.2	110.6	5500	**C323_110.6 S05 ME05B4**	**C323_110.6 S05 MX05B4**	163	**C323_110.6 P63 BE63B4**	**C323_110.6 P63 BX63B4**	164
12.8	125	2.4	103.3	5500	**C323_103.3 S05 ME05B4**	**C323_103.3 S05 MX05B4**	163	**C323_103.3 P63 BE63B4**	**C323_103.3 P63 BX63B4**	164
12.9	124	3.6	102.2	6500	**C363_102.2 S05 ME05B4**	**C363_102.2 S05 MX05B4**	167	**C363_102.2 P63 BE63B4**	**C363_102.2 P63 BX63B4**	168
13.2	121	1.7	100.2	5000	**C223_100.2 S05 ME05B4**	**C223_100.2 S05 MX05B4**	159	**C223_100.2 P63 BE63B4**	**C223_100.2 P63 BX63B4**	160
14.0	114	2.6	94.2	5500	**C323_94.2 S05 ME05B4**	**C323_94.2 S05 MX05B4**	163	**C323_94.2 P63 BE63B4**	**C323_94.2 P63 BX63B4**	164
14.9	107	1.9	88.5	5000	**C223_88.5 S05 ME05B4**	**C223_88.5 S05 MX05B4**	159	**C223_88.5 P63 BE63B4**	**C223_88.5 P63 BX63B4**	160
16.0	100	2.0	82.6	5000	**C223_82.6 S05 ME05B4**	**C223_82.6 S05 MX05B4**	159	**C223_82.6 P63 BE63B4**	**C223_82.6 P63 BX63B4**	160
16.0	100	3.0	82.6	5500	**C323_82.6 S05 ME05B4**	**C323_82.6 S05 MX05B4**	163	**C323_82.6 P63 BE63B4**	**C323_82.6 P63 BX63B4**	164
17.6	90	2.2	74.8	5000	**C223_74.8 S05 ME05B4**	**C223_74.8 S05 MX05B4**	159	**C223_74.8 P63 BE63B4**	**C223_74.8 P63 BX63B4**	160
17.7	90	3.2	74.7	5500	**C323_74.7 S05 ME05B4**	**C323_74.7 S05 MX05B4**	163	**C323_74.7 P63 BE63B4**	**C323_74.7 P63 BX63B4**	164
19.8	83	2.6	66.8	5500	**C322_66.8 S05 ME05B4**	**C322_66.8 S05 MX05B4**	163	**C322_66.8 P63 BE63B4**	**C322_66.8 P63 BX63B4**	164
20.0	82	1.1	66.2	2000	**C122_66.2 S05 ME05B4**	**C122_66.2 S05 MX05B4**	155	**C122_66.2 P63 BE63B4**	**C122_66.2 P63 BX63B4**	156
20.2	79	2.5	65.3	5000	**C223_65.3 S05 ME05B4**	**C223_65.3 S05 MX05B4**	159	**C223_65.3 P63 BE63B4**	**C223_65.3 P63 BX63B4**	160
20.9	78	1.7	63.3	5000	**C222_63.3 S05 ME05B4**	**C222_63.3 S05 MX05B4**	159	**C222_63.3 P63 BE63B4**	**C222_63.3 P63 BX63B4**	160
22.0	73	2.6	60.0	5000	**C223_60.0 S05 ME05B4**	**C223_60.0 S05 MX05B4**	159	**C223_60.0 P63 BE63B4**	**C223_60.0 P63 BX63B4**	160
22.2	73	2.9	59.4	5500	**C322_59.4 S05 ME05B4**	**C322_59.4 S05 MX05B4**	163	**C322_59.4 P63 BE63B4**	**C322_59.4 P63 BX63B4**	164
23.9	68	1.3	55.2	2000	**C122_55.2 S05 ME05B4**	**C122_55.2 S05 MX05B4**	155	**C122_55.2 P63 BE63B4**	**C122_55.2 P63 BX63B4**	156
24.1	68	2.3	54.7	5000	**C222_54.7 S05 ME05B4**	**C222_54.7 S05 MX05B4**	159	**C222_54.7 P63 BE63B4**	**C222_54.7 P63 BX63B4**	160
27.1	60	2.6	48.6	5000	**C222_48.6 S05 ME05B4**	**C222_48.6 S05 MX05B4**	159	**C222_48.6 P63 BE63B4**	**C222_48.6 P63 BX63B4**	160
27.7	59	1.5	47.6	2000	**C122_47.6 S05 ME05B4**	**C122_47.6 S05 MX05B4**	155	**C122_47.6 P63 BE63B4**	**C122_47.6 P63 BX63B4**	156
31.0	53	3.6	43.3	5000	**C222_43.3 S05 ME05B4**	**C222_43.3 S05 MX05B4**	159	**C222_43.3 P63 BE63B4**	**C222_43.3 P63 BX63B4**	160

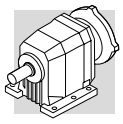

0.18 kW

n_2 min^{-1}	M_2 Nm	S	i	R_{n2} N	IE2	IE3		IE2	IEC IE3	
31.0	52	1.7	42.3	2000	**C122_42.3 S05 ME05B4**	**C122_42.3 S05 MX05B4**	155	**C122_42.3 P63 BE63B4**	**C122_42.3 P63 BX63B4**	156
33.0	50	0.9	40.3	850	**C052_40.3 S05 ME05B4**	**C052_40.3 S05 MX05B4**	154			
36.0	45	1.0	36.4	850	**C052_36.4 S05 ME05B4**	**C052_36.4 S05 MX05B4**	154			
36.0	46	2.0	37.0	2000	**C122_37.0 S05 ME05B4**	**C122_37.0 S05 MX05B4**	155	**C122_37.0 P63 BE63B4**	**C122_37.0 P63 BX63B4**	156
40.0	40	2.2	32.8	2000	**C122_32.8 S05 ME05B4**	**C122_32.8 S05 MX05B4**	155	**C122_32.8 P63 BE63B4**	**C122_32.8 P63 BX63B4**	156
40.0	41	1.1	32.8	840	**C052_32.8 S05 ME05B4**	**C052_32.8 S05 MX05B4**	154			
45.0	36	2.5	29.5	2000	**C122_29.5 S05 ME05B4**	**C122_29.5 S05 MX05B4**	155	**C122_29.5 P63 BE63B4**	**C122_29.5 P63 BX63B4**	156
49.0	34	1.3	27.1	820	**C052_27.1 S05 ME05B4**	**C052_27.1 S05 MX05B4**	154			
52.0	31	2.8	25.4	2000	**C122_25.4 S05 ME05B4**	**C122_25.4 S05 MX05B4**	155	**C122_25.4 P63 BE63B4**	**C122_25.4 P63 BX63B4**	156
57.0	29	3.0	23.2	2000	**C122_23.2 S05 ME05B4**	**C122_23.2 S05 MX05B4**	155	**C122_23.2 P63 BE63B4**	**C122_23.2 P63 BX63B4**	156
63.0	26	1.7	21.0	810	**C052_21.0 S05 ME05B4**	**C052_21.0 S05 MX05B4**	154			
64.0	25	3.2	20.6	2000	**C122_20.6 S05 ME05B4**	**C122_20.6 S05 MX05B4**	155	**C122_20.6 P63 BE63B4**	**C122_20.6 P63 BX63B4**	156
70.0	23	1.7	18.9	790	**C052_18.9 S05 ME05B4**	**C052_18.9 S05 MX05B4**	154			
72.0	23	3.4	18.4	2000	**C122_18.4 S05 ME05B4**	**C122_18.4 S05 MX05B4**	155	**C122_18.4 P63 BE63B4**	**C122_18.4 P63 BX63B4**	156
77.0	21	3.6	17.2	2000	**C122_17.2 S05 ME05B4**	**C122_17.2 S05 MX05B4**	155	**C122_17.2 P63 BE63B4**	**C122_17.2 P63 BX63B4**	156
85.0	19	2.1	15.6	760	**C052_15.6 S05 ME05B4**	**C052_15.6 S05 MX05B4**	154			
106.0	15	2.6	12.5	740	**C052_12.5 S05 ME05B4**	**C052_12.5 S05 MX05B4**	154			
118.0	14	2.9	11.2	720	**C052_11.2 S05 ME05B4**	**C052_11.2 S05 MX05B4**	154			
142.0	11	2.6	9.3	690	**C052_9.3 S05 ME05B4**	**C052_9.3 S05 MX05B4**	154			
178.0	9	3.3	7.4	650	**C052_7.4 S05 ME05B4**	**C052_7.4 S05 MX05B4**	154			
197.0	8	3.6	6.7	640	**C052_6.7 S05 ME05B4**	**C052_6.7 S05 MX05B4**	154			
240.0	7	4.4	5.5	600	**C052_5.5 S05 ME05B4**	**C052_5.5 S05 MX05B4**	154			

0.18 kW

n_2 min^{-1}	M_2 Nm	S	i	R_{n2} N	IE3		IEC IE3	
1.5	1049	1.0	884.9	10000			**C514_884.9 P63 BXN63MB4**	176
1.6	958	1.0	808.0	10000			**C514_808.0 P63 BXN63MB4**	176
1.8	861	1.9	726.3	16000			**C614_726.3 P63 BXN63MB4**	180
1.8	851	1.2	717.7	10000			**C514_717.7 P63 BXN63MB4**	176
2.0	796	0.8	671.3	7000	**C414_671.3 SX05 MXN05MB4**	171	**C414_671.3 P63 BXN63MB4**	172
2.0	777	1.3	655.4	10000			**C514_655.4 P63 BXN63MB4**	176
2.2	706	0.8	595.8	7000	**C414_595.8 SX05 MXN05MB4**	171	**C414_595.8 P63 BXN63MB4**	172
2.4	644	0.9	543.5	7000	**C414_543.5 SX05 MXN05MB4**	171	**C414_543.5 P63 BXN63MB4**	172
2.7	585	1.0	493.5	7000	**C414_493.5 SX05 MXN05MB4**	171	**C414_493.5 P63 BXN63MB4**	172
2.9	534	1.1	450.2	7000	**C414_450.2 SX05 MXN05MB4**	171	**C414_450.2 P63 BXN63MB4**	172
2.9	536	0.8	458.4	6500	**C364_458.4 SX05 MXN05MB4**	167	**C364_458.4 P63 BXN63MB4**	168
3.1	492	0.9	420.2	6500	**C364_420.2 SX05 MXN05MB4**	167	**C364_420.2 P63 BXN63MB4**	168
3.2	496	1.2	418.5	7000	**C414_418.5 SX05 MXN05MB4**	171	**C414_418.5 P63 BXN63MB4**	172
3.5	452	1.3	381.8	7000	**C414_381.8 SX05 MXN05MB4**	171	**C414_381.8 P63 BXN63MB4**	172
3.5	442	1.0	377.9	6500	**C364_377.9 SX05 MXN05MB4**	167	**C364_377.9 P63 BXN63MB4**	168
3.9	400	1.1	341.7	6500	**C364_341.7 SX05 MXN05MB4**	167	**C364_341.7 P63 BXN63MB4**	168
4.0	395	1.5	333.4	7000	**C414_333.4 SX05 MXN05MB4**	171	**C414_333.4 P63 BXN63MB4**	172
4.1	373	1.2	318.9	6500	**C364_318.9 SX05 MXN05MB4**	167	**C364_318.9 P63 BXN63MB4**	168
4.3	360	1.7	304.2	7000	**C414_304.2 SX05 MXN05MB4**	171	**C414_304.2 P63 BXN63MB4**	172
4.5	340	1.3	290.9	6500	**C364_290.9 SX05 MXN05MB4**	167	**C364_290.9 P63 BXN63MB4**	168
5.0	312	1.9	263.0	7000	**C414_263.0 SX05 MXN05MB4**	171	**C414_263.0 P63 BXN63MB4**	172
5.2	298	1.5	255.0	6500	**C364_255.0 SX05 MXN05MB4**	167	**C364_255.0 P63 BXN63MB4**	168
5.4	295	0.9	244.2	5500	**C323_244.2 SX05 MXN05MB4**	163	**C323_244.2 P63 BXN63MB4**	164
5.7	270	1.7	230.9	6500	**C364_230.9 SX05 MXN05MB4**	167	**C364_230.9 P63 BXN63MB4**	168

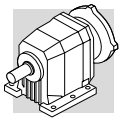

0.18 kW

n_2 min^{-1}	M_2 Nm	S	i	R_{n2} N	IE3		IEC IE3	
6.1	261	1.2	215.6	5500	**C323_215.6 SX05 MXN05MB4**	163	**C323_215.6 P63 BXN63MB4**	164
6.4	250	1.8	206.4	6500			**C363_206.4 P63 BXN63MB4**	168
7.1	225	1.3	186.0	5500	**C323_186.0 SX05 MXN05MB4**	163	**C323_186.0 P63 BXN63MB4**	164
7.2	222	2.0	183.5	6500			**C363_183.5 P63 BXN63MB4**	168
7.4	216	0.9	178.5	5000	**C223_178.5 SX05 MXN05MB4**	159	**C223_178.5 P63 BXN63MB4**	160
7.9	202	1.5	167.4	5500	**C323_167.4 SX05 MXN05MB4**	163	**C323_167.4 P63 BXN63MB4**	164
8.1	196	2.3	162.0	6500			**C363_162.0 P63 BXN63MB4**	168
8.7	183	1.1	151.7	5000	**C223_151.7 SX05 MXN05MB4**	159	**C223_151.7 P63 BXN63MB4**	160
8.9	179	1.7	148.4	5500	**C323_148.4 SX05 MXN05MB4**	163	**C323_148.4 P63 BXN63MB4**	164
9.4	169	2.7	139.8	6500			**C363_139.8 P63 BXN63MB4**	168
9.7	165	1.2	136.5	5000	**C223_136.5 SX05 MXN05MB4**	159	**C223_136.5 P63 BXN63MB4**	160
9.7	164	1.8	136.0	5500	**C323_136.0 SX05 MXN05MB4**	163	**C323_136.0 P63 BXN63MB4**	164
10.5	152	3.0	125.8	6500			**C363_125.8 P63 BXN63MB4**	168
10.8	148	2.0	122.4	5500	**C323_122.4 SX05 MXN05MB4**	163	**C323_122.4 P63 BXN63MB4**	164
10.8	148	1.4	122.2	5000	**C223_122.2 SX05 MXN05MB4**	159	**C223_122.2 P63 BXN63MB4**	160
11.8	135	1.5	112.0	5000	**C223_112.0 SX05 MXN05MB4**	159	**C223_112.0 P63 BXN63MB4**	160
11.8	135	3.3	111.5	6500			**C363_111.5 P63 BXN63MB4**	168
11.9	134	2.2	110.6	5500	**C323_110.6 SX05 MXN05MB4**	163	**C323_110.6 P63 BXN63MB4**	164
12.8	125	2.4	103.3	5500	**C323_103.3 SX05 MXN05MB4**	163	**C323_103.3 P63 BXN63MB4**	164
12.9	124	3.6	102.2	6500			**C363_102.2 P63 BXN63MB4**	168
13.2	121	1.7	100.2	5000	**C223_100.2 SX05 MXN05MB4**	159	**C223_100.2 P63 BXN63MB4**	160
14.0	114	2.6	94.2	5500	**C323_94.2 SX05 MXN05MB4**	163	**C323_94.2 P63 BXN63MB4**	164
14.9	107	1.9	88.5	5000	**C223_88.5 SX05 MXN05MB4**	159	**C223_88.5 P63 BXN63MB4**	160
16.0	100	2.0	82.6	5000	**C223_82.6 SX05 MXN05MB4**	159	**C223_82.6 P63 BXN63MB4**	160
16.0	100	3.0	82.6	5500	**C323_82.6 SX05 MXN05MB4**	163	**C323_82.6 P63 BXN63MB4**	164
17.6	90	2.2	74.8	5000	**C223_74.8 SX05 MXN05MB4**	159	**C223_74.8 P63 BXN63MB4**	160
17.7	90	3.2	74.7	5500	**C323_74.7 SX05 MXN05MB4**	163	**C323_74.7 P63 BXN63MB4**	164
19.8	83	2.6	66.8	5500			**C322_66.8 P63 BXN63MB4**	164
20.0	82	1.1	66.2	2000	**C122_66.2 SX05 MXN05MB4**	155	**C122_66.2 P63 BXN63MB4**	156
20.2	79	2.5	65.3	5000	**C223_65.3 SX05 MXN05MB4**	159	**C223_65.3 P63 BXN63MB4**	160
20.9	78	1.7	63.3	5000	**C222_63.3 SX05 MXN05MB4**	159	**C222_63.3 P63 BXN63MB4**	160
22.0	73	2.6	60.0	5000	**C223_60.0 SX05 MXN05MB4**	159	**C223_60.0 P63 BXN63MB4**	160
23.9	68	1.3	55.2	2000	**C122_55.2 SX05 MXN05MB4**	155	**C122_55.2 P63 BXN63MB4**	156
24.1	68	2.3	54.7	5000	**C222_54.7 SX05 MXN05MB4**	159	**C222_54.7 P63 BXN63MB4**	160
27.1	60	2.6	48.6	5000	**C222_48.6 SX05 MXN05MB4**	159	**C222_48.6 P63 BXN63MB4**	160
27.7	59	1.5	47.6	2000	**C122_47.6 SX05 MXN05MB4**	155	**C122_47.6 P63 BXN63MB4**	156
31.0	53	3.6	43.3	5000	**C222_43.3 SX05 MXN05MB4**	159	**C222_43.3 P63 BXN63MB4**	160
31.0	52	1.7	42.3	2000	**C122_42.3 SX05 MXN05MB4**	155	**C122_42.3 P63 BXN63MB4**	156
36.0	46	2.0	37.0	2000	**C122_37.0 SX05 MXN05MB4**	155	**C122_37.0 P63 BXN63MB4**	156
40.0	40	2.2	32.8	2000	**C122_32.8 SX05 MXN05MB4**	155	**C122_32.8 P63 BXN63MB4**	156
45.0	36	2.5	29.5	2000	**C122_29.5 SX05 MXN05MB4**	155	**C122_29.5 P63 BXN63MB4**	156
52.0	31	2.8	25.4	2000	**C122_25.4 SX05 MXN05MB4**	155	**C122_25.4 P63 BXN63MB4**	156
57.0	29	3.0	23.2	2000	**C122_23.2 SX05 MXN05MB4**	155	**C122_23.2 P63 BXN63MB4**	156
64.0	25	3.2	20.6	2000	**C122_20.6 SX05 MXN05MB4**	155	**C122_20.6 P63 BXN63MB4**	156
72.0	23	3.4	18.4	2000	**C122_18.4 SX05 MXN05MB4**	155	**C122_18.4 P63 BXN63MB4**	156
77.0	21	3.6	17.2	2000	**C122_17.2 SX05 MXN05MB4**	155	**C122_17.2 P63 BXN63MB4**	156

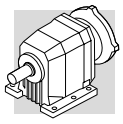

0.25 kW

n_2 min-1	M_2 Nm	S	i	R_{n2} N	IE2	IE3		IEC IE2	IEC IE3	
1.6	1330	0.8	808.0	10000				**C514_808.0 P71 BE71A4**	**C514_808.0 P71 BX71A4**	176
1.6	1330	0.8	808.0	10000					**C514_808.0 P63 BX63C4**	176
1.9	1134	0.9	717.7	10000				**C514_717.7 P71 BE71A4**	**C514_717.7 P71 BX71A4**	176
2.0	1101	1.5	668.8	16000				**C614_668.8 P71 BE71A4**	**C614_668.8 P71 BX71A4**	180
2.0	1101	1.5	668.8	16000					**C614_668.8 P63 BX63C4**	180
2.5	869	1.2	549.7	10000				**C514_549.7 P71 BE71A4**	**C514_549.7 P71 BX71A4**	176
2.9	741	0.8	450.2	7000	**C414_450.2 S1 ME1SA4**	**C414_450.2 S1 MX1SA4**	171	**C414_450.2 P71 BE71A4**	**C414_450.2 P71 BX71A4**	172
3.2	689	0.9	418.5	7000	**C414_418.5 S1 ME1SA4**	**C414_418.5 S1 MX1SA4**	171	**C414_418.5 P71 BE71A4**	**C414_418.5 P71 BX71A4**	172
3.2	684	1.5	415.7	10000				**C514_415.7 P71 BE71A4**	**C514_415.7 P71 BX71A4**	176
3.5	628	1.0	381.8	7000	**C414_381.8 S1 ME1SA4**	**C414_381.8 S1 MX1SA4**	171	**C414_381.8 P71 BE71A4**	**C414_381.8 P71 BX71A4**	172
3.5	625	1.6	379.6	10000				**C514_379.6 P71 BE71A4**	**C514_379.6 P71 BX71A4**	176
3.8	567	0.8	344.3	6500	**C364_344.3 S1 ME1SA4**	**C364_344.3 S1 MX1SA4**	167	**C364_344.3 P71 BE71A4**	**C364_344.3 P71 BX71A4**	168
4.0	549	1.1	333.4	7000	**C414_333.4 S1 ME1SA4**	**C414_333.4 S1 MX1SA4**	171	**C414_333.4 P71 BE71A4**	**C414_333.4 P71 BX71A4**	172
4.0	537	1.9	326.1	10000				**C514_326.1 P71 BE71A4**	**C514_326.1 P71 BX71A4**	176
4.2	511	0.9	318.9	6500	**C364_318.9 S1 ME1SA4**	**C364_318.9 S1 MX1SA4**	167	**C364_318.9 P71 BE71A4**	**C364_318.9 P71 BX71A4**	168
4.3	501	1.2	304.2	7000	**C414_304.2 S1 ME1SA4**	**C414_304.2 S1 MX1SA4**	171	**C414_304.2 P71 BE71A4**	**C414_304.2 P71 BX71A4**	172
4.4	490	2.0	297.8	10000				**C514_297.8 P71 BE71A4**	**C514_297.8 P71 BX71A4**	176
4.6	466	1.0	290.9	6500	**C364_290.9 S1 ME1SA4**	**C364_290.9 S1 MX1SA4**	167	**C364_290.9 P71 BE71A4**	**C364_290.9 P71 BX71A4**	168
5.0	434	2.3	263.8	10000				**C514_263.8 P71 BE71A4**	**C514_263.8 P71 BX71A4**	176
5.0	433	1.4	263.0	7000	**C414_263.0 S1 ME1SA4**	**C414_263.0 S1 MX1SA4**	171	**C414_263.0 P71 BE71A4**	**C414_263.0 P71 BX71A4**	172
5.3	409	1.1	255.0	6500	**C364_255.0 S1 ME1SA4**	**C364_255.0 S1 MX1SA4**	167	**C364_255.0 P71 BE71A4**	**C364_255.0 P71 BX71A4**	168
5.5	395	1.5	239.9	7000	**C414_239.9 S1 ME1SA4**	**C414_239.9 S1 MX1SA4**	171	**C414_239.9 P71 BE71A4**	**C414_239.9 P71 BX71A4**	172
5.8	370	1.2	230.9	6500	**C364_230.9 S1 ME1SA4**	**C364_230.9 S1 MX1SA4**	167	**C364_230.9 P71 BE71A4**	**C364_230.9 P71 BX71A4**	168
6.3	350	2.9	216.7	10000				**C513_216.7 P71 BE71A4**	**C513_216.7 P71 BX71A4**	176
6.5	342	1.3	206.4	6500	**C363_206.4 S1 ME1SA4**	**C363_206.4 S1 MX1SA4**	167	**C363_206.4 P71 BE71A4**	**C363_206.4 P71 BX71A4**	168
7.2	308	1.9	190.8	7000				**C413_190.8 P71 BE71A4**	**C413_190.8 P71 BX71A4**	172
7.2	308	1.0	186.0	5500	**C323_186.0 S1 ME1SA4**	**C323_186.0 S1 MX1SA4**	163	**C323_186.0 P71 BE71A4**	**C323_186.0 P71 BX71A4**	164
7.3	304	1.5	183.5	6500	**C363_183.5 S1 ME1SA4**	**C363_183.5 S1 MX1SA4**	167	**C363_183.5 P71 BE71A4**	**C363_183.5 P71 BX71A4**	168
8.0	277	1.1	167.4	5500	**C323_167.4 S1 ME1SA4**	**C323_167.4 S1 MX1SA4**	163	**C323_167.4 P71 BE71A4**	**C323_167.4 P71 BX71A4**	164
8.3	268	1.7	162.0	6500	**C363_162.0 S1 ME1SA4**	**C363_162.0 S1 MX1SA4**	167	**C363_162.0 P71 BE71A4**	**C363_162.0 P71 BX71A4**	168
8.4	265	2.3	164.1	7000				**C413_164.1 P71 BE71A4**	**C413_164.1 P71 BX71A4**	172
9.0	246	1.2	148.4	5500	**C323_148.4 S1 ME1SA4**	**C323_148.4 S1 MX1SA4**	163	**C323_148.4 P71 BE71A4**	**C323_148.4 P71 BX71A4**	164
9.6	231	1.9	139.8	6500	**C363_139.8 S1 ME1SA4**	**C363_139.8 S1 MX1SA4**	167	**C363_139.8 P71 BE71A4**	**C363_139.8 P71 BX71A4**	168
9.8	226	0.9	136.5	5000	**C223_136.5 S1 ME1SA4**	**C223_136.5 S1 MX1SA4**	159	**C223_136.5 P71 BE71A4**	**C223_136.5 P71 BX71A4**	160
9.9	225	1.3	136.0	5500	**C323_136.0 S1 ME1SA4**	**C323_136.0 S1 MX1SA4**	163	**C323_136.0 P71 BE71A4**	**C323_136.0 P71 BX71A4**	164
10.3	215	2.8	132.9	7000				**C413_132.9 P71 BE71A4**	**C413_132.9 P71 BX71A4**	172
10.7	208	2.2	125.8	6500	**C363_125.8 S1 ME1SA4**	**C363_125.8 S1 MX1SA4**	167	**C363_125.8 P71 BE71A4**	**C363_125.8 P71 BX71A4**	168
11.0	203	1.5	122.4	5500	**C323_122.4 S1 ME1SA4**	**C323_122.4 S1 MX1SA4**	163	**C323_122.4 P71 BE71A4**	**C323_122.4 P71 BX71A4**	164
11.0	202	1.0	122.2	5000	**C223_122.2 S1 ME1SA4**	**C223_122.2 S1 MX1SA4**	159	**C223_122.2 P71 BE71A4**	**C223_122.2 P71 BX71A4**	160
12.0	185	1.1	112.0	5000	**C223_112.0 S1 ME1SA4**	**C223_112.0 S1 MX1SA4**	159	**C223_112.0 P71 BE71A4**	**C223_112.0 P71 BX71A4**	160
12.0	185	2.4	111.5	6500	**C363_111.5 S1 ME1SA4**	**C363_111.5 S1 MX1SA4**	167	**C363_111.5 P71 BE71A4**	**C363_111.5 P71 BX71A4**	168
12.1	183	1.6	110.6	5500	**C323_110.6 S1 ME1SA4**	**C323_110.6 S1 MX1SA4**	163	**C323_110.6 P71 BE71A4**	**C323_110.6 P71 BX71A4**	164
13.0	171	1.8	103.3	5500	**C323_103.3 S1 ME1SA4**	**C323_103.3 S1 MX1SA4**	163	**C323_103.3 P71 BE71A4**	**C323_103.3 P71 BX71A4**	164
13.1	169	2.7	102.2	6500	**C363_102.2 S1 ME1SA4**	**C363_102.2 S1 MX1SA4**	167	**C363_102.2 P71 BE71A4**	**C363_102.2 P71 BX71A4**	168
13.4	166	1.2	100.2	5000	**C223_100.2 S1 ME1SA4**	**C223_100.2 S1 MX1SA4**	159	**C223_100.2 P71 BE71A4**	**C223_100.2 P71 BX71A4**	160
14.2	156	1.9	94.2	5500	**C323_94.2 S1 ME1SA4**	**C323_94.2 S1 MX1SA4**	163	**C323_94.2 P71 BE71A4**	**C323_94.2 P71 BX71A4**	164
14.6	152	3.0	91.9	6500	**C363_91.9 S1 ME1SA4**	**C363_91.9 S1 MX1SA4**	167	**C363_91.9 P71 BE71A4**	**C363_91.9 P71 BX71A4**	168
15.1	147	1.4	88.5	5000	**C223_88.5 S1 ME1SA4**	**C223_88.5 S1 MX1SA4**	159	**C223_88.5 P71 BE71A4**	**C223_88.5 P71 BX71A4**	160
16.2	137	1.5	82.6	5000	**C223_82.6 S1 ME1SA4**	**C223_82.6 S1 MX1SA4**	159	**C223_82.6 P71 BE71A4**	**C223_82.6 P71 BX71A4**	160
16.2	137	2.2	82.6	5500	**C323_82.6 S1 ME1SA4**	**C323_82.6 S1 MX1SA4**	163	**C323_82.6 P71 BE71A4**	**C323_82.6 P71 BX71A4**	164
17.9	124	1.6	74.8	5000	**C223_74.8 S1 ME1SA4**	**C223_74.8 S1 MX1SA4**	159	**C223_74.8 P71 BE71A4**	**C223_74.8 P71 BX71A4**	160
17.9	124	2.3	74.7	5500	**C323_74.7 S1 ME1SA4**	**C323_74.7 S1 MX1SA4**	163	**C323_74.7 P71 BE71A4**	**C323_74.7 P71 BX71A4**	164
20.1	113	1.9	66.8	5500	**C322_66.8 S1 ME1SA4**	**C322_66.8 S1 MX1SA4**	163	**C322_66.8 P71 BE71A4**	**C322_66.8 P71 BX71A4**	164
20.3	112	0.8	66.2	2000	**C122_66.2 S1 ME1SA4**	**C122_66.2 S1 MX1SA4**	155	**C122_66.2 P71 BE71A4**	**C122_66.2 P71 BX71A4**	156
20.5	108	1.8	65.3	5000	**C223_65.3 S1 ME1SA4**	**C223_65.3 S1 MX1SA4**	159	**C223_65.3 P71 BE71A4**	**C223_65.3 P71 BX71A4**	160
21.2	107	1.2	63.3	5000				**C222_63.3 P71 BE71A4**	**C222_63.3 P71 BX71A4**	160
22.3	99	1.9	60.0	5000	**C223_60.0 S1 ME1SA4**	**C223_60.0 S1 MX1SA4**	159	**C223_60.0 P71 BE71A4**	**C223_60.0 P71 BX71A4**	160

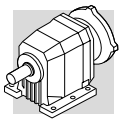

0.25 kW

n_2 min-1	M_2 Nm	S	i	R_{n2} N	IE2	IE3		IE2	IEC IE3	
22.6	100	2.1	59.4	5500	**C322_59.4 S1 ME1SA4**	**C322_59.4 S1 MX1SA4**	163	**C322_59.4 P71 BE71A4**	**C322_59.4 P71 BX71A4**	164
24.3	93	1.0	55.2	2000	**C122_55.2 S1 ME1SA4**	**C122_55.2 S1 MX1SA4**	155	**C122_55.2 P71 BE71A4**	**C122_55.2 P71 BX71A4**	156
24.5	93	1.7	54.7	5000				**C222_54.7 P71 BE71A4**	**C222_54.7 P71 BX71A4**	160
25.6	89	3.4	52.4	5500	**C322_52.4 S1 ME1SA4**	**C322_52.4 S1 MX1SA4**	163	**C322_52.4 P71 BE71A4**	**C322_52.4 P71 BX71A4**	164
27.5	82	1.9	48.6	5000				**C222_48.6 P71 BE71A4**	**C222_48.6 P71 BX71A4**	160
28.1	80	1.1	47.6	2000	**C122_47.6 S1 ME1SA4**	**C122_47.6 S1 MX1SA4**	155	**C122_47.6 P71 BE71A4**	**C122_47.6 P71 BX71A4**	156
31.0	73	2.6	43.3	4750	**C222_43.3 S1 ME1SA4**	**C222_43.3 S1 MX1SA4**	159	**C222_43.3 P71 BE71A4**	**C222_43.3 P71 BX71A4**	160
32.0	72	1.3	42.3	2000	**C122_42.3 S1 ME1SA4**	**C122_42.3 S1 MX1SA4**	155	**C122_42.3 P71 BE71A4**	**C122_42.3 P71 BX71A4**	156
36.0	63	1.4	37.0	2000	**C122_37.0 S1 ME1SA4**	**C122_37.0 S1 MX1SA4**	155	**C122_37.0 P71 BE71A4**	**C122_37.0 P71 BX71A4**	156
36.0	62	3.2	36.8	4540	**C222_36.8 S1 ME1SA4**	**C222_36.8 S1 MX1SA4**	159	**C222_36.8 P71 BE71A4**	**C222_36.8 P71 BX71A4**	160
40.0	56	3.6	33.1	4500	**C222_33.1 S1 ME1SA4**	**C222_33.1 S1 MX1SA4**	159	**C222_33.1 P71 BE71A4**	**C222_33.1 P71 BX71A4**	160
41.0	55	1.6	32.8	2000	**C122_32.8 S1 ME1SA4**	**C122_32.8 S1 MX1SA4**	155	**C122_32.8 P71 BE71A4**	**C122_32.8 P71 BX71A4**	156
45.0	50	1.8	29.5	2000	**C122_29.5 S1 ME1SA4**	**C122_29.5 S1 MX1SA4**	155	**C122_29.5 P71 BE71A4**	**C122_29.5 P71 BX71A4**	156
49.0	47	1.0	27.1	700	**C052_27.1 S1 ME1SA4**	**C052_27.1 S1 MX1SA4**	154			
53.0	43	2.1	25.4	2000	**C122_25.4 S1 ME1SA4**	**C122_25.4 S1 MX1SA4**	155	**C122_25.4 P71 BE71A4**	**C122_25.4 P71 BX71A4**	156
58.0	39	2.2	23.2	2000	**C122_23.2 S1 ME1SA4**	**C122_23.2 S1 MX1SA4**	155	**C122_23.2 P71 BE71A4**	**C122_23.2 P71 BX71A4**	156
63.0	36	1.2	21.0	720	**C052_21.0 S1 ME1SA4**	**C052_21.0 S1 MX1SA4**	154			
65.0	35	2.4	20.6	2000	**C122_20.6 S1 ME1SA4**	**C122_20.6 S1 MX1SA4**	155	**C122_20.6 P71 BE71A4**	**C122_20.6 P71 BX71A4**	156
70.0	33	1.2	18.9	710	**C052_18.9 S1 ME1SA4**	**C052_18.9 S1 MX1SA4**	154			
73.0	31	2.5	18.4	2000	**C122_18.4 S1 ME1SA4**	**C122_18.4 S1 MX1SA4**	155	**C122_18.4 P71 BE71A4**	**C122_18.4 P71 BX71A4**	156
78.0	29	2.6	17.2	2000	**C122_17.2 S1 ME1SA4**	**C122_17.2 S1 MX1SA4**	155	**C122_17.2 P71 BE71A4**	**C122_17.2 P71 BX71A4**	156
85.0	27	1.5	15.6	700	**C052_15.6 S1 ME1SA4**	**C052_15.6 S1 MX1SA4**	154			
87.0	26	2.8	15.4	2000	**C122_15.4 S1 ME1SA4**	**C122_15.4 S1 MX1SA4**	155	**C122_15.4 P71 BE71A4**	**C122_15.4 P71 BX71A4**	156
100.0	23	3.1	13.4	2000	**C122_13.4 S1 ME1SA4**	**C122_13.4 S1 MX1SA4**	155	**C122_13.4 P71 BE71A4**	**C122_13.4 P71 BX71A4**	156
106.0	22	1.9	12.5	690	**C052_12.5 S1 ME1SA4**	**C052_12.5 S1 MX1SA4**	154			
113.0	20	3.3	11.9	2000	**C122_11.9 S1 ME1SA4**	**C122_11.9 S1 MX1SA4**	155	**C122_11.9 P71 BE71A4**	**C122_11.9 P71 BX71A4**	156
118.0	19	2.1	11.2	670	**C052_11.2 S1 ME1SA4**	**C052_11.2 S1 MX1SA4**	154			
133.0	17	3.7	10.1	1980	**C122_10.1 S1 ME1SA4**	**C122_10.1 S1 MX1SA4**	155	**C122_10.1 P71 BE71A4**	**C122_10.1 P71 BX71A4**	156
142.0	16	1.9	9.3	650	**C052_9.3 S1 ME1SA4**	**C052_9.3 S1 MX1SA4**	154			
178.0	13	2.4	7.4	620	**C052_7.4 S1 ME1SA4**	**C052_7.4 S1 MX1SA4**	154			
197.0	12	2.6	6.7	610	**C052_6.7 S1 ME1SA4**	**C052_6.7 S1 MX1SA4**	154			
240.0	9	3.2	5.5	580	**C052_5.5 S05 M05C4**	**C052_5.5 S1 ME1SA4**	154			

0.25 kW

n_2 min-1	M_2 Nm	S	i	R_{n2} N	IE3		IEC IE3	
1.9	1134	0.9	717.7	10000			**C514_717.7 P71 BXN71MA4**	176
2.5	869	1.2	549.7	10000			**C514_549.7 P71 BXN71MA4**	176
2.9	741	0.8	450.2	7000	**C414_450.2 SX10 MXN10MA4**	171	**C414_450.2 P71 BXN71MA4**	172
3.2	689	0.9	418.5	7000	**C414_418.5 SX10 MXN10MA4**	171	**C414_418.5 P71 BXN71MA4**	172
3.2	684	1.5	415.7	10000			**C514_415.7 P71 BXN71MA4**	176
3.5	628	1.0	381.8	7000	**C414_381.8 SX10 MXN10MA4**	171	**C414_381.8 P71 BXN71MA4**	172
3.5	625	1.6	379.6	10000			**C514_379.6 P71 BXN71MA4**	176
3.8	567	0.8	344.3	6500	**C364_344.3 SX10 MXN10MA4**	167	**C364_344.3 P71 BXN71MA4**	168
4.0	549	1.1	333.4	7000	**C414_333.4 SX10 MXN10MA4**	171	**C414_333.4 P71 BXN71MA4**	172
4.0	537	1.9	326.1	10000			**C514_326.1 P71 BXN71MA4**	176
4.2	511	0.9	318.9	6500	**C364_318.9 SX10 MXN10MA4**	167	**C364_318.9 P71 BXN71MA4**	168
4.3	501	1.2	304.2	7000	**C414_304.2 SX10 MXN10MA4**	171	**C414_304.2 P71 BXN71MA4**	172
4.4	490	2.0	297.8	10000			**C514_297.8 P71 BXN71MA4**	176
4.6	466	1.0	290.9	6500	**C364_290.9 SX10 MXN10MA4**	167	**C364_290.9 P71 BXN71MA4**	168
5.0	434	2.3	263.8	10000			**C514_263.8 P71 BXN71MA4**	176
5.0	433	1.4	263.0	7000	**C414_263.0 SX10 MXN10MA4**	171	**C414_263.0 P71 BXN71MA4**	172
5.3	409	1.1	255.0	6500	**C364_255.0 SX10 MXN10MA4**	167	**C364_255.0 P71 BXN71MA4**	168
5.5	395	1.5	239.9	7000	**C414_239.9 SX10 MXN10MA4**	171	**C414_239.9 P71 BXN71MA4**	172

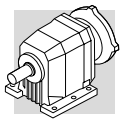

0.25 kW

n_2 min-1	M_2 Nm	S	i	R_{n2} N	IE3		IEC IE3	
5.8	370	1.2	230.9	6500	**C364_230.9 SX10 MXN10MA4**	167	**C364_230.9 P71 BXN71MA4**	168
6.3	350	2.9	216.7	10000			**C513_216.7 P71 BXN71MA4**	176
6.5	342	1.3	206.4	6500	**C363_206.4 SX10 MXN10MA4**	167	**C363_206.4 P71 BXN71MA4**	168
7.2	308	1.9	190.8	7000			**C413_190.8 P71 BXN71MA4**	172
7.2	308	1.0	186.0	5500	**C323_186.0 SX10 MXN10MA4**	163	**C323_186.0 P71 BXN71MA4**	164
7.3	304	1.5	183.5	6500	**C363_183.5 SX10 MXN10MA4**	167	**C363_183.5 P71 BXN71MA4**	168
8.0	277	1.1	167.4	5500	**C323_167.4 SX10 MXN10MA4**	163	**C323_167.4 P71 BXN71MA4**	164
8.3	268	1.7	162.0	6500	**C363_162.0 SX10 MXN10MA4**	167	**C363_162.0 P71 BXN71MA4**	168
8.4	265	2.3	164.1	7000			**C413_164.1 P71 BXN71MA4**	172
9.0	246	1.2	148.4	5500	**C323_148.4 SX10 MXN10MA4**	163	**C323_148.4 P71 BXN71MA4**	164
9.6	231	1.9	139.8	6500	**C363_139.8 SX10 MXN10MA4**	167	**C363_139.8 P71 BXN71MA4**	168
9.8	226	0.9	136.5	5000	**C223_136.5 SX10 MXN10MA4**	159	**C223_136.5 P71 BXN71MA4**	160
9.9	225	1.3	136.0	5500	**C323_136.0 SX10 MXN10MA4**	163	**C323_136.0 P71 BXN71MA4**	164
10.3	215	2.8	132.9	7000			**C413_132.9 P71 BXN71MA4**	172
10.7	208	2.2	125.8	6500	**C363_125.8 SX10 MXN10MA4**	167	**C363_125.8 P71 BXN71MA4**	168
11.0	203	1.5	122.4	5500	**C323_122.4 SX10 MXN10MA4**	163	**C323_122.4 P71 BXN71MA4**	164
11.0	202	1.0	122.2	5000	**C223_122.2 SX10 MXN10MA4**	159	**C223_122.2 P71 BXN71MA4**	160
12.0	185	1.1	112.0	5000	**C223_112.0 SX10 MXN10MA4**	159	**C223_112.0 P71 BXN71MA4**	160
12.0	185	2.4	111.5	6500	**C363_111.5 SX10 MXN10MA4**	167	**C363_111.5 P71 BXN71MA4**	168
12.1	183	1.6	110.6	5500	**C323_110.6 SX10 MXN10MA4**	163	**C323_110.6 P71 BXN71MA4**	164
13.0	171	1.8	103.3	5500	**C323_103.3 SX10 MXN10MA4**	163	**C323_103.3 P71 BXN71MA4**	164
13.1	169	2.7	102.2	6500	**C363_102.2 SX10 MXN10MA4**	167	**C363_102.2 P71 BXN71MA4**	168
13.4	166	1.2	100.2	5000	**C223_100.2 SX10 MXN10MA4**	159	**C223_100.2 P71 BXN71MA4**	160
14.2	156	1.9	94.2	5500	**C323_94.2 SX10 MXN10MA4**	163	**C323_94.2 P71 BXN71MA4**	164
14.6	152	3.0	91.9	6500	**C363_91.9 SX10 MXN10MA4**	167	**C363_91.9 P71 BXN71MA4**	168
15.1	147	1.4	88.5	5000	**C223_88.5 SX10 MXN10MA4**	159	**C223_88.5 P71 BXN71MA4**	160
16.2	137	1.5	82.6	5000	**C223_82.6 SX10 MXN10MA4**	159	**C223_82.6 P71 BXN71MA4**	160
16.2	137	2.2	82.6	5500	**C323_82.6 SX10 MXN10MA4**	163	**C323_82.6 P71 BXN71MA4**	164
17.9	124	1.6	74.8	5000	**C223_74.8 SX10 MXN10MA4**	159	**C223_74.8 P71 BXN71MA4**	160
17.9	124	2.3	74.7	5500	**C323_74.7 SX10 MXN10MA4**	163	**C323_74.7 P71 BXN71MA4**	164
20.1	113	1.9	66.8	5500	**C322_66.8 SX10 MXN10MA4**	163	**C322_66.8 P71 BXN71MA4**	164
20.3	112	0.8	66.2	2000	**C122_66.2 SX10 MXN10MA4**	155	**C122_66.2 P71 BXN71MA4**	156
20.5	108	1.8	65.3	5000	**C223_65.3 SX10 MXN10MA4**	159	**C223_65.3 P71 BXN71MA4**	160
21.2	107	1.2	63.3	5000			**C222_63.3 P71 BXN71MA4**	160
22.3	99	1.9	60.0	5000	**C223_60.0 SX10 MXN10MA4**	159	**C223_60.0 P71 BXN71MA4**	160
22.6	100	2.1	59.4	5500	**C322_59.4 SX10 MXN10MA4**	163	**C322_59.4 P71 BXN71MA4**	164
24.3	93	1.0	55.2	2000	**C122_55.2 SX10 MXN10MA4**	155	**C122_55.2 P71 BXN71MA4**	156
24.5	93	1.7	54.7	5000			**C222_54.7 P71 BXN71MA4**	160
25.6	89	3.4	52.4	5500	**C322_52.4 SX10 MXN10MA4**	163	**C322_52.4 P71 BXN71MA4**	164

0.37 kW

n_2 min-1	M_2 Nm	S	i	R_{n2} N	IE2	IE3		IEC IE2	IEC IE3	
0.9	3476	1.2	1481	35000				**C804_1481 P71 BE71B4**	**C804_1481 P71 BX71B4**	187
1.2	2741	1.5	1168	35000				**C804_1168 P71 BE71B4**	**C804_1168 P71 BX71B4**	187
1.4	2220	1.8	945.7	35000				**C804_945.7 P71 BE71B4**	**C804_945.7 P71 BX71B4**	187
1.5	2165	1.1	922.6	25000				**C704_922.6 P71 BE71B4**	**C704_922.6 P71 BX71B4**	184
1.7	1869	0.9	796.1	16000	**C614_796.1 S1 ME1SB4**	**C614_796.1 S1 MX1SB4**	179	**C614_796.1 P71 BE71B4**	**C614_796.1 P71 BX71B4**	180
2.0	1570	1.0	668.8	16000	**C614_668.8 S1 ME1SB4**	**C614_668.8 S1 MX1SB4**	179	**C614_668.8 P71 BE71B4**	**C614_668.8 P71 BX71B4**	180
2.1	1543	1.5	657.3	25000				**C704_657.3 P71 BE71B4**	**C704_657.3 P71 BX71B4**	184
2.4	1341	1.2	571.2	16000	**C614_571.2 S1 ME1SB4**	**C614_571.2 S1 MX1SB4**	179	**C614_571.2 P71 BE71B4**	**C614_571.2 P71 BX71B4**	180
2.5	1302	1.8	554.7	25000				**C704_554.7 P71 BE71B4**	**C704_554.7 P71 BX71B4**	184
2.5	1290	0.8	549.7	10000	**C514_549.7 S1 ME1SB4**	**C514_549.7 S1 MX1SB4**	175	**C514_549.7 P71 BE71B4**	**C514_549.7 P71 BX71B4**	176
2.6	1223	1.3	521.1	16000	**C614_521.1 S1 ME1SB4**	**C614_521.1 S1 MX1SB4**	179	**C614_521.1 P71 BE71B4**	**C614_521.1 P71 BX71B4**	180

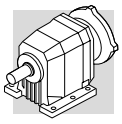

0.37 kW

n_2 min^{-1}	M_2 Nm	S	i	R_{n2} N	IE2	IE3		IEC IE2	IEC IE3	
3.3	989	1.6	421.5	16000	**C614_421.5 S1 ME1SB4**	**C614_421.5 S1 MX1SB4**	179	**C614_421.5 P71 BE71B4**	**C614_421.5 P71 BX71B4**	180
3.3	976	1.0	415.7	10000	**C514_415.7 S1 ME1SB4**	**C514_415.7 S1 MX1SB4**	175	**C514_415.7 P71 BE71B4**	**C514_415.7 P71 BX71B4**	176
3.3	961	2.4	409.4	25000				**C704_409.4 P71 BE71B4**	**C704_409.4 P71 BX71B4**	184
3.6	891	1.1	379.6	10000	**C514_379.6 S1 ME1SB4**	**C514_379.6 S1 MX1SB4**	175	**C514_379.6 P71 BE71B4**	**C514_379.6 P71 BX71B4**	176
3.7	869	1.8	370.1	16000	**C614_370.1 S1 ME1SB4**	**C614_370.1 S1 MX1SB4**	179	**C614_370.1 P71 BE71B4**	**C614_370.1 P71 BX71B4**	180
4.1	793	2.0	337.7	16000	**C614_337.7 S1 ME1SB4**	**C614_337.7 S1 MX1SB4**	179	**C614_337.7 P71 BE71B4**	**C614_337.7 P71 BX71B4**	180
4.1	783	0.8	333.4	7000	**C414_333.4 S1 ME1SB4**	**C414_333.4 S1 MX1SB4**	171	**C414_333.4 P71 BE71B4**	**C414_333.4 P71 BX71B4**	172
4.2	765	1.3	326.1	10000	**C514_326.1 S1 ME1SB4**	**C514_326.1 S1 MX1SB4**	175	**C514_326.1 P71 BE71B4**	**C514_326.1 P71 BX71B4**	176
4.6	699	1.4	297.8	10000	**C514_297.8 S1 ME1SB4**	**C514_297.8 S1 MX1SB4**	175	**C514_297.8 P71 BE71B4**	**C514_297.8 P71 BX71B4**	176
5.2	619	1.6	263.8	10000	**C514_263.8 S1 ME1SB4**	**C514_263.8 S1 MX1SB4**	175	**C514_263.8 P71 BE71B4**	**C514_263.8 P71 BX71B4**	176
5.2	617	1.0	263.0	7000	**C414_263.0 S1 ME1SB4**	**C414_263.0 S1 MX1SB4**	171	**C414_263.0 P71 BE71B4**	**C414_263.0 P71 BX71B4**	172
5.9	540	0.8	230.9	6300	**C364_230.9 S1 ME1SB4**	**C364_230.9 S1 MX1SB4**	167	**C364_230.9 P71 BE71B4**	**C364_230.9 P71 BX71B4**	168
6.3	520	1.9	216.7	10000	**C513_216.7 S1 ME1SB4**	**C513_216.7 S1 MX1SB4**	175	**C513_216.7 P71 BE71B4**	**C513_216.7 P71 BX71B4**	176
6.6	502	1.2	209.1	7000	**C413_209.1 S1 ME1SB4**	**C413_209.1 S1 MX1SB4**	171	**C413_209.1 P71 BE71B4**	**C413_209.1 P71 BX71B4**	172
6.6	499	0.9	206.4	6500				**C363_206.4 P71 BE71B4**	**C363_206.4 P71 BX71B4**	168
6.9	475	2.1	197.9	10000	**C513_197.9 S1 ME1SB4**	**C513_197.9 S1 MX1SB4**	175	**C513_197.9 P71 BE71B4**	**C513_197.9 P71 BX71B4**	176
7.2	458	1.3	190.8	7000	**C413_190.8 S1 ME1SB4**	**C413_190.8 S1 MX1SB4**	171	**C413_190.8 P71 BE71B4**	**C413_190.8 P71 BX71B4**	172
7.5	444	1.0	183.5	6500				**C363_183.5 P71 BE71B4**	**C363_183.5 P71 BX71B4**	168
7.6	431	1.4	179.9	7000	**C413_179.9 S1 ME1SB4**	**C413_179.9 S1 MX1SB4**	171	**C413_179.9 P71 BE71B4**	**C413_179.9 P71 BX71B4**	172
7.8	422	2.4	175.8	10000	**C513_175.8 S1 ME1SB4**	**C513_175.8 S1 MX1SB4**	175	**C513_175.8 P71 BE71B4**	**C513_175.8 P71 BX71B4**	176
8.3	394	1.5	164.1	7000	**C413_164.1 S1 ME1SB4**	**C413_164.1 S1 MX1SB4**	171	**C413_164.1 P71 BE71B4**	**C413_164.1 P71 BX71B4**	172
8.5	385	2.6	160.5	10000	**C513_160.5 S1 ME1SB4**	**C513_160.5 S1 MX1SB4**	175	**C513_160.5 P71 BE71B4**	**C513_160.5 P71 BX71B4**	176
8.5	392	1.1	162.0	6500	**C363_162.0 S1 ME1SB4**	**C363_162.0 S1 MX1SB4**	167	**C363_162.0 P71 BE71B4**	**C363_162.0 P71 BX71B4**	168
9.4	349	1.7	145.6	7000	**C413_145.6 S1 ME1SB4**	**C413_145.6 S1 MX1SB4**	171	**C413_145.6 P71 BE71B4**	**C413_145.6 P71 BX71B4**	172
9.8	338	1.3	139.8	6500	**C363_139.8 S1 ME1SB4**	**C363_139.8 S1 MX1SB4**	167	**C363_139.8 P71 BE71B4**	**C363_139.8 P71 BX71B4**	168
10.1	329	0.9	136.0	5500	**C323_136.0 S1 ME1SB4**	**C323_136.0 S1 MX1SB4**	163	**C323_136.0 P71 BE71B4**	**C323_136.0 P71 BX71B4**	164
10.3	319	1.9	132.9	7000	**C413_132.9 S1 ME1SB4**	**C413_132.9 S1 MX1SB4**	171	**C413_132.9 P71 BE71B4**	**C413_132.9 P71 BX71B4**	172
10.9	304	1.5	125.8	6500	**C363_125.8 S1 ME1SB4**	**C363_125.8 S1 MX1SB4**	167	**C363_125.8 P71 BE71B4**	**C363_125.8 P71 BX71B4**	168
11.2	296	1.0	122.4	5500	**C323_122.4 S1 ME1SB4**	**C323_122.4 S1 MX1SB4**	163	**C323_122.4 P71 BE71B4**	**C323_122.4 P71 BX71B4**	164
11.4	289	2.1	120.6	7000	**C413_120.6 S1 ME1SB4**	**C413_120.6 S1 MX1SB4**	171	**C413_120.6 P71 BE71B4**	**C413_120.6 P71 BX71B4**	172
12.3	270	1.7	111.5	6500	**C363_111.5 S1 ME1SB4**	**C363_111.5 S1 MX1SB4**	167	**C363_111.5 P71 BE71B4**	**C363_111.5 P71 BX71B4**	168
12.4	264	2.3	110.1	7000	**C413_110.1 S1 ME1SB4**	**C413_110.1 S1 MX1SB4**	171	**C413_110.1 P71 BE71B4**	**C413_110.1 P71 BX71B4**	172
12.4	267	1.1	110.6	5500	**C323_110.6 S1 ME1SB4**	**C323_110.6 S1 MX1SB4**	163	**C323_110.6 P71 BE71B4**	**C323_110.6 P71 BX71B4**	164
13.3	250	1.2	103.3	5500	**C323_103.3 S1 ME1SB4**	**C323_103.3 S1 MX1SB4**	163	**C323_103.3 P71 BE71B4**	**C323_103.3 P71 BX71B4**	164
13.4	245	2.4	102.3	7000	**C413_102.3 S1 ME1SB4**	**C413_102.3 S1 MX1SB4**	171	**C413_102.3 P71 BE71B4**	**C413_102.3 P71 BX71B4**	172
13.4	247	1.8	102.2	6500	**C363_102.2 S1 ME1SB4**	**C363_102.2 S1 MX1SB4**	167	**C363_102.2 P71 BE71B4**	**C363_102.2 P71 BX71B4**	168
14.5	228	1.3	94.2	5500	**C323_94.2 S1 ME1SB4**	**C323_94.2 S1 MX1SB4**	163	**C323_94.2 P71 BE71B4**	**C323_94.2 P71 BX71B4**	164
14.7	224	2.7	93.3	7000	**C413_93.3 S1 ME1SB4**	**C413_93.3 S1 MX1SB4**	171	**C413_93.3 P71 BE71B4**	**C413_93.3 P71 BX71B4**	172
14.9	222	2.0	91.9	6500	**C363_91.9 S1 ME1SB4**	**C363_91.9 S1 MX1SB4**	167	**C363_91.9 P71 BE71B4**	**C363_91.9 P71 BX71B4**	168
15.5	214	0.9	88.5	4850	**C223_88.5 S1 ME1SB4**	**C223_88.5 S1 MX1SB4**	159	**C223_88.5 P71 BE71B4**	**C223_88.5 P71 BX71B4**	160
16.5	201	2.2	83.1	6500	**C363_83.1 S1 ME1SB4**	**C363_83.1 S1 MX1SB4**	167	**C363_83.1 P71 BE71B4**	**C363_83.1 P71 BX71B4**	168
16.6	200	1.0	82.6	5000	**C223_82.6 S1 ME1SB4**	**C223_82.6 S1 MX1SB4**	159	**C223_82.6 P71 BE71B4**	**C223_82.6 P71 BX71B4**	160
16.6	200	1.5	82.6	5500	**C323_82.6 S1 ME1SB4**	**C323_82.6 S1 MX1SB4**	163	**C323_82.6 P71 BE71B4**	**C323_82.6 P71 BX71B4**	164
16.8	196	3.1	81.5	7000	**C413_81.5 S1 ME1SB4**	**C413_81.5 S1 MX1SB4**	171	**C413_81.5 P71 BE71B4**	**C413_81.5 P71 BX71B4**	172
17.7	188	2.4	77.6	6500	**C363_77.6 S1 ME1SB4**	**C363_77.6 S1 MX1SB4**	167	**C363_77.6 P71 BE71B4**	**C363_77.6 P71 BX71B4**	168
18.3	181	1.1	74.8	5000	**C223_74.8 S1 ME1SB4**	**C223_74.8 S1 MX1SB4**	159	**C223_74.8 P71 BE71B4**	**C223_74.8 P71 BX71B4**	160
18.3	181	1.6	74.7	5500	**C323_74.7 S1 ME1SB4**	**C323_74.7 S1 MX1SB4**	163	**C323_74.7 P71 BE71B4**	**C323_74.7 P71 BX71B4**	164
18.4	178	3.4	74.4	7000	**C413_74.4 S1 ME1SB4**	**C413_74.4 S1 MX1SB4**	171	**C413_74.4 P71 BE71B4**	**C413_74.4 P71 BX71B4**	172
19.4	171	2.6	70.8	6500	**C363_70.8 S1 ME1SB4**	**C363_70.8 S1 MX1SB4**	167	**C363_70.8 P71 BE71B4**	**C363_70.8 P71 BX71B4**	168
20.5	165	1.3	66.8	5500				**C322_66.8 P71 BE71B4**	**C322_66.8 P71 BX71B4**	164
21.0	158	1.3	65.3	5000	**C223_65.3 S1 ME1SB4**	**C223_65.3 S1 MX1SB4**	159	**C223_65.3 P71 BE71B4**	**C223_65.3 P71 BX71B4**	160
21.7	156	0.8	63.3	4850				**C222_63.3 P71 BE71B4**	**C222_63.3 P71 BX71B4**	160
22.1	150	3.0	62.0	6500	**C363_62.0 S1 ME1SB4**	**C363_62.0 S1 MX1SB4**	167	**C363_62.0 P71 BE71B4**	**C363_62.0 P71 BX71B4**	168
22.8	145	1.3	60.0	5000	**C223_60.0 S1 ME1SB4**	**C223_60.0 S1 MX1SB4**	159	**C223_60.0 P71 BE71B4**	**C223_60.0 P71 BX71B4**	160
23.1	147	1.5	59.4	5500	**C322_59.4 S1 ME1SB4**	**C322_59.4 S1 MX1SB4**	163	**C322_59.4 P71 BE71B4**	**C322_59.4 P71 BX71B4**	164
25.0	135	1.1	54.7	5000				**C222_54.7 P71 BE71B4**	**C222_54.7 P71 BX71B4**	160
26.1	130	2.3	52.4	5500	**C322_52.4 S1 ME1SB4**	**C322_52.4 S1 MX1SB4**	163	**C322_52.4 P71 BE71B4**	**C322_52.4 P71 BX71B4**	164

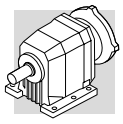

0.37 kW

n_2 min-1	M_2 Nm	S	i	R_{n2} N	IE2	IE3		IE2	IEC IE3	
28.2	120	1.3	48.6	4850				**C222_48.6 P71 BE71B4**	**C222_48.6 P71 BX71B4**	160
30.0	112	2.7	45.3	5500	**C322_45.3 S1 ME1SB4**	**C322_45.3 S1 MX1SB4**	163	**C322_45.3 P71 BE71B4**	**C322_45.3 P71 BX71B4**	164
32.0	107	1.8	43.3	4530	**C222_43.3 S1 ME1SB4**	**C222_43.3 S1 MX1SB4**	159	**C222_43.3 P71 BE71B4**	**C222_43.3 P71 BX71B4**	160
34.0	101	3.0	40.7	5500	**C322_40.7 S1 ME1SB4**	**C322_40.7 S1 MX1SB4**	163	**C322_40.7 P71 BE71B4**	**C322_40.7 P71 BX71B4**	164
37.0	91	1.0	37.0	2000	**C122_37.0 S1 ME1SB4**	**C122_37.0 S1 MX1SB4**	155	**C122_37.0 P71 BE71B4**	**C122_37.0 P71 BX71B4**	156
37.0	91	2.2	36.8	4360	**C222_36.8 S1 ME1SB4**	**C222_36.8 S1 MX1SB4**	159	**C222_36.8 P71 BE71B4**	**C222_36.8 P71 BX71B4**	160
38.0	89	3.4	36.1	5500	**C322_36.1 S1 ME1SB4**	**C322_36.1 S1 MX1SB4**	163	**C322_36.1 P71 BE71B4**	**C322_36.1 P71 BX71B4**	164
41.0	82	2.4	33.1	4240	**C222_33.1 S1 ME1SB4**	**C222_33.1 S1 MX1SB4**	159	**C222_33.1 P71 BE71B4**	**C222_33.1 P71 BX71B4**	160
42.0	81	1.1	32.8	2000	**C122_32.8 S1 ME1SB4**	**C122_32.8 S1 MX1SB4**	155	**C122_32.8 P71 BE71B4**	**C122_32.8 P71 BX71B4**	156
46.0	73	2.7	29.6	4130	**C222_29.6 S1 ME1SB4**	**C222_29.6 S1 MX1SB4**	159	**C222_29.6 P71 BE71B4**	**C222_29.6 P71 BX71B4**	160
46.0	73	1.2	29.5	2000	**C122_29.5 S1 ME1SB4**	**C122_29.5 S1 MX1SB4**	155	**C122_29.5 P71 BE71B4**	**C122_29.5 P71 BX71B4**	156
50.0	67	3.0	27.2	4100	**C222_27.2 S1 ME1SB4**	**C222_27.2 S1 MX1SB4**	159	**C222_27.2 P71 BE71B4**	**C222_27.2 P71 BX71B4**	160
54.0	63	1.4	25.4	2000	**C122_25.4 S1 ME1SB4**	**C122_25.4 S1 MX1SB4**	155	**C122_25.4 P71 BE71B4**	**C122_25.4 P71 BX71B4**	156
56.0	60	3.3	24.3	3920	**C222_24.3 S1 ME1SB4**	**C222_24.3 S1 MX1SB4**	159	**C222_24.3 P71 BE71B4**	**C222_24.3 P71 BX71B4**	160
59.0	57	1.5	23.2	2000	**C122_23.2 S1 ME1SB4**	**C122_23.2 S1 MX1SB4**	155	**C122_23.2 P71 BE71B4**	**C122_23.2 P71 BX71B4**	156
66.0	51	1.6	20.6	2000	**C122_20.6 S1 ME1SB4**	**C122_20.6 S1 MX1SB4**	155	**C122_20.6 P71 BE71B4**	**C122_20.6 P71 BX71B4**	156
74.0	45	1.7	18.4	2000	**C122_18.4 S1 ME1SB4**	**C122_18.4 S1 MX1SB4**	155	**C122_18.4 P71 BE71B4**	**C122_18.4 P71 BX71B4**	156
80.0	42	1.8	17.2	2000	**C122_17.2 S1 ME1SB4**	**C122_17.2 S1 MX1SB4**	155	**C122_17.2 P71 BE71B4**	**C122_17.2 P71 BX71B4**	156
88.0	39	1.0	15.6	580	**C052_15.6 S1 ME1SB4**	**C052_15.6 S1 MX1SB4**	154			
89.0	38	1.9	15.4	2000	**C122_15.4 S1 ME1SB4**	**C122_15.4 S1 MX1SB4**	155	**C122_15.4 P71 BE71B4**	**C122_15.4 P71 BX71B4**	156
102.0	33	2.1	13.4	2000	**C122_13.4 S1 ME1SB4**	**C122_13.4 S1 MX1SB4**	155	**C122_13.4 P71 BE71B4**	**C122_13.4 P71 BX71B4**	156
110.0	31	1.3	12.5	600	**C052_12.5 S1 ME1SB4**	**C052_12.5 S1 MX1SB4**	154			
115.0	29	2.3	11.9	2000	**C122_11.9 S1 ME1SB4**	**C122_11.9 S1 MX1SB4**	155	**C122_11.9 P71 BE71B4**	**C122_11.9 P71 BX71B4**	156
122.0	28	1.4	11.2	590	**C052_11.2 S1 ME1SB4**	**C052_11.2 S1 MX1SB4**	154			
136.0	25	2.5	10.1	1930	**C122_10.1 S1 ME1SB4**	**C122_10.1 S1 MX1SB4**	155	**C122_10.1 P71 BE71B4**	**C122_10.1 P71 BX71B4**	156
147.0	23	1.3	9.3	580	**C052_9.3 S1 ME1SB4**	**C052_9.3 S1 MX1SB4**	154			
155.0	22	2.7	8.8	1850	**C122_8.8 S1 ME1SB4**	**C122_8.8 S1 MX1SB4**	155	**C122_8.8 P71 BE71B4**	**C122_8.8 P71 BX71B4**	156
180.0	19	3.0	7.6	1780	**C122_7.6 S1 ME1SB4**	**C122_7.6 S1 MX1SB4**	155	**C122_7.6 P71 BE71B4**	**C122_7.6 P71 BX71B4**	156
185.0	18	1.6	7.4	570	**C052_7.4 S1 ME1SB4**	**C052_7.4 S1 MX1SB4**	154			
204.0	17	1.8	6.7	560	**C052_6.7 S1 ME1SB4**	**C052_6.7 S1 MX1SB4**	154			
220.0	15	3.4	6.2	1650	**C122_6.2 S1 ME1SB4**	**C122_6.2 S1 MX1SB4**	155	**C122_6.2 P71 BE71B4**	**C122_6.2 P71 BX71B4**	156
249.0	14	2.2	5.5	540	**C052_5.5 S1 ME1SB4**	**C052_5.5 S1 MX1SB4**	154			

0.37 kW

n_2 min-1	M_2 Nm	S	i	R_{n2} N	IE3		IEC IE3	
0.9	3476	1.2	1481	35000			**C804_1481 P71 BXN71MB4**	187
1.2	2741	1.5	1168	35000			**C804_1168 P71 BXN71MB4**	187
1.4	2220	1.8	945.7	35000			**C804_945.7 P71 BXN71MB4**	187
1.5	2165	1.1	922.6	25000			**C704_922.6 P71 BXN71MB4**	184
1.7	1869	0.9	796.1	16000			**C614_796.1 P71 BXN71MB4**	180
2.0	1570	1.0	668.8	16000			**C614_668.8 P71 BXN71MB4**	180
2.1	1543	1.5	657.3	25000			**C704_657.3 P71 BXN71MB4**	184
2.4	1341	1.2	571.2	16000			**C614_571.2 P71 BXN71MB4**	180
2.5	1302	1.8	554.7	25000			**C704_554.7 P71 BXN71MB4**	184
2.5	1290	0.8	549.7	10000	**C514_549.7 SX10 MXN10MB4**	175	**C514_549.7 P71 BXN71MB4**	176
2.6	1223	1.3	521.1	16000			**C614_521.1 P71 BXN71MB4**	180
3.3	989	1.6	421.5	16000			**C614_421.5 P71 BXN71MB4**	180
3.3	976	1.0	415.7	10000	**C514_415.7 SX10 MXN10MB4**	175	**C514_415.7 P71 BXN71MB4**	176
3.3	961	2.4	409.4	25000			**C704_409.4 P71 BXN71MB4**	184
3.6	891	1.1	379.6	10000	**C514_379.6 SX10 MXN10MB4**	175	**C514_379.6 P71 BXN71MB4**	176
3.7	869	1.8	370.1	16000			**C614_370.1 P71 BXN71MB4**	180
4.1	793	2.0	337.7	16000			**C614_337.7 P71 BXN71MB4**	180
4.1	783	0.8	333.4	7000	**C414_333.4 SX10 MXN10MB4**	171	**C414_333.4 P71 BXN71MB4**	172

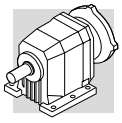

0.37 kW

n_2 min^{-1}	M_2 Nm	S	i	R_{n2} N	IE3		IEC IE3	
4.2	765	1.3	326.1	10000	**C514_326.1 SX10 MXN10MB4**	175	**C514_326.1 P71 BXN71MB4**	176
4.6	699	1.4	297.8	10000	**C514_297.8 SX10 MXN10MB4**	175	**C514_297.8 P71 BXN71MB4**	176
5.2	619	1.6	263.8	10000	**C514_263.8 SX10 MXN10MB4**	175	**C514_263.8 P71 BXN71MB4**	176
5.2	617	1.0	263.0	7000	**C414_263.0 SX10 MXN10MB4**	171	**C414_263.0 P71 BXN71MB4**	172
5.9	540	0.8	230.9	6300	**C364_230.9 SX10 MXN10MB4**	167	**C364_230.9 P71 BXN71MB4**	168
6.3	520	1.9	216.7	10000			**C513_216.7 P71 BXN71MB4**	176
6.6	502	1.2	209.1	7000			**C413_209.1 P71 BXN71MB4**	172
6.6	499	0.9	206.4	6500			**C363_206.4 P71 BXN71MB4**	168
6.9	475	2.1	197.9	10000			**C513_197.9 P71 BXN71MB4**	176
7.2	458	1.3	190.8	7000			**C413_190.8 P71 BXN71MB4**	172
7.5	444	1.0	183.5	6500			**C363_183.5 P71 BXN71MB4**	168
7.6	431	1.4	179.9	7000			**C413_179.9 P71 BXN71MB4**	172
7.8	422	2.4	175.8	10000			**C513_175.8 P71 BXN71MB4**	176
8.3	394	1.5	164.1	7000			**C413_164.1 P71 BXN71MB4**	172
8.5	385	2.6	160.5	10000			**C513_160.5 P71 BXN71MB4**	176
8.5	392	1.1	162.0	6500	**C363_162.0 SX10 MXN10MB4**	167	**C363_162.0 P71 BXN71MB4**	168
9.4	349	1.7	145.6	7000			**C413_145.6 P71 BXN71MB4**	172
9.8	338	1.3	139.8	6500	**C363_139.8 SX10 MXN10MB4**	167	**C363_139.8 P71 BXN71MB4**	168
10.1	329	0.9	136.0	5500	**C323_136.0 SX10 MXN10MB4**	163	**C323_136.0 P71 BXN71MB4**	164
10.3	319	1.9	132.9	7000			**C413_132.9 P71 BXN71MB4**	172
10.9	304	1.5	125.8	6500	**C363_125.8 SX10 MXN10MB4**	167	**C363_125.8 P71 BXN71MB4**	168
11.2	296	1.0	122.4	5500	**C323_122.4 SX10 MXN10MB4**	163	**C323_122.4 P71 BXN71MB4**	164
11.4	289	2.1	120.6	7000			**C413_120.6 P71 BXN71MB4**	172
12.3	270	1.7	111.5	6500	**C363_111.5 SX10 MXN10MB4**	167	**C363_111.5 P71 BXN71MB4**	168
12.4	264	2.3	110.1	7000			**C413_110.1 P71 BXN71MB4**	172
12.4	267	1.1	110.6	5500	**C323_110.6 SX10 MXN10MB4**	163	**C323_110.6 P71 BXN71MB4**	164
13.3	250	1.2	103.3	5500	**C323_103.3 SX10 MXN10MB4**	163	**C323_103.3 P71 BXN71MB4**	164
13.4	245	2.4	102.3	7000			**C413_102.3 P71 BXN71MB4**	172
13.4	247	1.8	102.2	6500	**C363_102.2 SX10 MXN10MB4**	167	**C363_102.2 P71 BXN71MB4**	168
14.5	228	1.3	94.2	5500	**C323_94.2 SX10 MXN10MB4**	163	**C323_94.2 P71 BXN71MB4**	164
14.7	224	2.7	93.3	7000			**C413_93.3 P71 BXN71MB4**	172
14.9	222	2.0	91.9	6500	**C363_91.9 SX10 MXN10MB4**	167	**C363_91.9 P71 BXN71MB4**	168
15.5	214	0.9	88.5	4850	**C223_88.5 SX10 MXN10MB4**	159	**C223_88.5 P71 BXN71MB4**	160
16.5	201	2.2	83.1	6500	**C363_83.1 SX10 MXN10MB4**	167	**C363_83.1 P71 BXN71MB4**	168
16.6	200	1.0	82.6	5000	**C223_82.6 SX10 MXN10MB4**	159	**C223_82.6 P71 BXN71MB4**	160
16.6	200	1.5	82.6	5500	**C323_82.6 SX10 MXN10MB4**	163	**C323_82.6 P71 BXN71MB4**	164
16.8	196	3.1	81.5	7000			**C413_81.5 P71 BXN71MB4**	172
17.7	188	2.4	77.6	6500	**C363_77.6 SX10 MXN10MB4**	167	**C363_77.6 P71 BXN71MB4**	168
18.3	181	1.1	74.8	5000	**C223_74.8 SX10 MXN10MB4**	159	**C223_74.8 P71 BXN71MB4**	160
18.3	181	1.6	74.7	5500	**C323_74.7 SX10 MXN10MB4**	163	**C323_74.7 P71 BXN71MB4**	164
18.4	178	3.4	74.4	7000			**C413_74.4 P71 BXN71MB4**	172
19.4	171	2.6	70.8	6500	**C363_70.8 SX10 MXN10MB4**	167	**C363_70.8 P71 BXN71MB4**	168
20.5	165	1.3	66.8	5500			**C322_66.8 P71 BXN71MB4**	164
21.0	158	1.3	65.3	5000	**C223_65.3 SX10 MXN10MB4**	159	**C223_65.3 P71 BXN71MB4**	160
21.7	156	0.8	63.3	4850			**C222_63.3 P71 BXN71MB4**	160
22.1	150	3.0	62.0	6500	**C363_62.0 SX10 MXN10MB4**	167	**C363_62.0 P71 BXN71MB4**	168
22.8	145	1.3	60.0	5000	**C223_60.0 SX10 MXN10MB4**	159	**C223_60.0 P71 BXN71MB4**	160
23.1	147	1.5	59.4	5500	**C322_59.4 SX10 MXN10MB4**	163	**C322_59.4 P71 BXN71MB4**	164
25.0	135	1.1	54.7	5000			**C222_54.7 P71 BXN71MB4**	160
26.1	130	2.3	52.4	5500	**C322_52.4 SX10 MXN10MB4**	163	**C322_52.4 P71 BXN71MB4**	164
28.2	120	1.3	48.6	4850			**C222_48.6 P71 BXN71MB4**	160
30.0	112	2.7	45.3	5500	**C322_45.3 SX10 MXN10MB4**	163	**C322_45.3 P71 BXN71MB4**	164
32.0	107	1.8	43.3	4530	**C222_43.3 SX10 MXN10MB4**	159	**C222_43.3 P71 BXN71MB4**	160
34.0	101	3.0	40.7	5500	**C322_40.7 SX10 MXN10MB4**	163	**C322_40.7 P71 BXN71MB4**	164
37.0	91	1.0	37.0	2000	**C122_37.0 SX10 MXN10MB4**	155	**C122_37.0 P71 BXN71MB4**	156
37.0	91	2.2	36.8	4360	**C222_36.8 SX10 MXN10MB4**	159	**C222_36.8 P71 BXN71MB4**	160
38.0	89	3.4	36.1	5500	**C322_36.1 SX10 MXN10MB4**	163	**C322_36.1 P71 BXN71MB4**	164

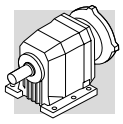

0.37 kW

n_2 min^{-1}	M_2 Nm	S	i	R_{n2} N	IE3		IEC IE3	
41.0	82	2.4	33.1	4240	**C222_33.1 SX10 MXN10MB4**	159	**C222_33.1 P71 BXN71MB4**	160
42.0	81	1.1	32.8	2000	**C122_32.8 SX10 MXN10MB4**	155	**C122_32.8 P71 BXN71MB4**	156
46.0	73	2.7	29.6	4130	**C222_29.6 SX10 MXN10MB4**	159	**C222_29.6 P71 BXN71MB4**	160
46.0	73	1.2	29.5	2000	**C122_29.5 SX10 MXN10MB4**	155	**C122_29.5 P71 BXN71MB4**	156
50.0	67	3.0	27.2	4100	**C222_27.2 SX10 MXN10MB4**	159	**C222_27.2 P71 BXN71MB4**	160
54.0	63	1.4	25.4	2000	**C122_25.4 SX10 MXN10MB4**	155	**C122_25.4 P71 BXN71MB4**	156
56.0	60	3.3	24.3	3920	**C222_24.3 SX10 MXN10MB4**	159	**C222_24.3 P71 BXN71MB4**	160
59.0	57	1.5	23.2	2000	**C122_23.2 SX10 MXN10MB4**	155	**C122_23.2 P71 BXN71MB4**	156
66.0	51	1.6	20.6	2000	**C122_20.6 SX10 MXN10MB4**	155	**C122_20.6 P71 BXN71MB4**	156
74.0	45	1.7	18.4	2000	**C122_18.4 SX10 MXN10MB4**	155	**C122_18.4 P71 BXN71MB4**	156
80.0	42	1.8	17.2	2000	**C122_17.2 SX10 MXN10MB4**	155	**C122_17.2 P71 BXN71MB4**	156
89.0	38	1.9	15.4	2000	**C122_15.4 SX10 MXN10MB4**	155	**C122_15.4 P71 BXN71MB4**	156
102.0	33	2.1	13.4	2000	**C122_13.4 SX10 MXN10MB4**	155	**C122_13.4 P71 BXN71MB4**	156
115.0	29	2.3	11.9	2000	**C122_11.9 SX10 MXN10MB4**	155	**C122_11.9 P71 BXN71MB4**	156
136.0	25	2.5	10.1	1930	**C122_10.1 SX10 MXN10MB4**	155	**C122_10.1 P71 BXN71MB4**	156
155.0	22	2.7	8.8	1850	**C122_8.8 SX10 MXN10MB4**	155	**C122_8.8 P71 BXN71MB4**	156
180.0	19	3.0	7.6	1780	**C122_7.6 SX10 MXN10MB4**	155	**C122_7.6 P71 BXN71MB4**	156
220.0	15	3.4	6.2	1650	**C122_6.2 SX10 MXN10MB4**	155	**C122_6.2 P71 BXN71MB4**	156

0.55 kW

n_2 min^{-1}	M_2 Nm	S	i	R_{n2} N	IE2	IE3		IEC IE2	IEC IE3	
1.1	4381	0.9	1274	35000	**C804_1274 S2 ME2SA4**	**C804_1274 S2 MX2SA4**	186	**C804_1274 P80 BE80A4**	**C804_1274 P80 BX80A4**	187
1.1	4295	1.7	1240	60000	**C904_1240 S2 ME2SA4**	**C904_1240 S2 MX2SA4**	189	**C904_1240 P80 BE80A4**	**C904_1240 P80 BX80A4**	190
1.3	3549	1.1	1032	35000	**C804_1032 S2 ME2SA4**	**C804_1032 S2 MX2SA4**	186	**C804_1032 P80 BE80A4**	**C804_1032 P80 BX80A4**	187
1.4	3484	2.1	1006	60000	**C904_1006 S2 ME2SA4**	**C904_1006 S2 MX2SA4**	189	**C904_1006 P80 BE80A4**	**C904_1006 P80 BX80A4**	190
1.6	2939	1.4	854.6	35000	**C804_854.6 S2 ME2SA4**	**C804_854.6 S2 MX2SA4**	186	**C804_854.6 P80 BE80A4**	**C804_854.6 P80 BX80A4**	187
1.6	2923	2.5	844.0	65000	**C904_844.0 S2 ME2SA4**	**C904_844.0 S2 MX2SA4**	189	**C904_844.0 P80 BE80A4**	**C904_844.0 P80 BX80A4**	190
1.9	2531	0.9	736.0	25000	**C704_736.0 S2 ME2SA4**	**C704_736.0 S2 MX2SA4**	183	**C704_736.0 P80 BE80A4**	**C704_736.0 P80 BX80A4**	184
1.9	2492	1.6	724.7	35000	**C804_724.7 S2 ME2SA4**	**C804_724.7 S2 MX2SA4**	186	**C804_724.7 P80 BE80A4**	**C804_724.7 P80 BX80A4**	187
2.1	2284	1.8	664.3	35000	**C804_664.3 S2 ME2SA4**	**C804_664.3 S2 MX2SA4**	186	**C804_664.3 P80 BE80A4**	**C804_664.3 P80 BX80A4**	187
2.1	2260	1.0	657.3	25000	**C704_657.3 S2 ME2SA4**	**C704_657.3 S2 MX2SA4**	183	**C704_657.3 P80 BE80A4**	**C704_657.3 P80 BX80A4**	184
2.4	1978	0.8	571.2	16000	**C614_571.2 S2 ME2SA4**	**C614_571.2 S2 MX2SA4**	179	**C614_571.2 P80 BE80A4**	**C614_571.2 P80 BX80A4**	180
2.5	1907	1.2	554.7	25000	**C704_554.7 S2 ME2SA4**	**C704_554.7 S2 MX2SA4**	183	**C704_554.7 P80 BE80A4**	**C704_554.7 P80 BX80A4**	184
2.6	1820	2.2	529.3	35000	**C804_529.3 S2 ME2SA4**	**C804_529.3 S2 MX2SA4**	186	**C804_529.3 P80 BE80A4**	**C804_529.3 P80 BX80A4**	187
3.0	1600	1.0	462.0	16000	**C614_462.0 S2 ME2SA4**	**C614_462.0 S2 MX2SA4**	179	**C614_462.0 P80 BE80A4**	**C614_462.0 P80 BX80A4**	180
3.1	1566	2.6	455.4	35000	**C804_455.4 S2 ME2SA4**	**C804_455.4 S2 MX2SA4**	186	**C804_455.4 P80 BE80A4**	**C804_455.4 P80 BX80A4**	187
3.1	1525	1.5	443.5	25000	**C704_443.5 S2 ME2SA4**	**C704_443.5 S2 MX2SA4**	183	**C704_443.5 P80 BE80A4**	**C704_443.5 P80 BX80A4**	184
3.3	1460	1.1	421.5	16000	**C614_421.5 S2 ME2SA4**	**C614_421.5 S2 MX2SA4**	179	**C614_421.5 P80 BE80A4**	**C614_421.5 P80 BX80A4**	180
3.6	1315	0.8	379.6	10000	**C514_379.6 S2 ME2SA4**	**C514_379.6 S2 MX2SA4**	175	**C514_379.6 P80 BE80A4**	**C514_379.6 P80 BX80A4**	176
3.7	1282	1.2	370.1	16000	**C614_370.1 S2 ME2SA4**	**C614_370.1 S2 MX2SA4**	179	**C614_370.1 P80 BE80A4**	**C614_370.1 P80 BX80A4**	180
3.8	1254	3.2	364.7	35000	**C804_364.7 S2 ME2SA4**	**C804_364.7 S2 MX2SA4**	186	**C804_364.7 P80 BE80A4**	**C804_364.7 P80 BX80A4**	187
4.0	1184	1.9	344.3	25000	**C704_344.3 S2 ME2SA4**	**C704_344.3 S2 MX2SA4**	183	**C704_344.3 P80 BE80A4**	**C704_344.3 P80 BX80A4**	184
4.1	1170	1.4	337.7	16000	**C614_337.7 S2 ME2SA4**	**C614_337.7 S2 MX2SA4**	179	**C614_337.7 P80 BE80A4**	**C614_337.7 P80 BX80A4**	180
4.2	1130	0.9	326.1	10000	**C514_326.1 S2 ME2SA4**	**C514_326.1 S2 MX2SA4**	175	**C514_326.1 P80 BE80A4**	**C514_326.1 P80 BX80A4**	176
4.6	1031	1.0	297.8	10000	**C514_297.8 S2 ME2SA4**	**C514_297.8 S2 MX2SA4**	175	**C514_297.8 P80 BE80A4**	**C514_297.8 P80 BX80A4**	176
5.0	953	1.7	275.3	16000	**C614_275.3 S2 ME2SA4**	**C614_275.3 S2 MX2SA4**	179	**C614_275.3 P80 BE80A4**	**C614_275.3 P80 BX80A4**	180
5.1	936	2.5	272.2	25000	**C704_272.2 S2 ME2SA4**	**C704_272.2 S2 MX2SA4**	183	**C704_272.2 P80 BE80A4**	**C704_272.2 P80 BX80A4**	184
5.2	914	1.1	263.8	10000	**C514_263.8 S2 ME2SA4**	**C514_263.8 S2 MX2SA4**	175	**C514_263.8 P80 BE80A4**	**C514_263.8 P80 BX80A4**	176
5.7	834	1.2	240.9	10000	**C514_240.9 S2 ME2SA4**	**C514_240.9 S2 MX2SA4**	175	**C514_240.9 P80 BE80A4**	**C514_240.9 P80 BX80A4**	176
5.8	847	2.7	239.3	25000				**C703_239.3 P80 BE80A4**	**C703_239.3 P80 BX80A4**	184
5.8	825	1.9	238.3	16000	**C614_238.3 S2 ME2SA4**	**C614_238.3 S2 MX2SA4**	179	**C614_238.3 P80 BE80A4**	**C614_238.3 P80 BX80A4**	180
6.2	782	2.9	220.9	25000				**C703_220.9 P80 BE80A4**	**C703_220.9 P80 BX80A4**	184

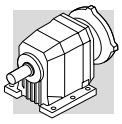

0.55 kW

n_2 min-1	M_2 Nm	S	i	R_{n2} N	IE2	IE3		IEC IE2	IEC IE3	
6.3	753	2.1	217.4	16000	**C614_217.4 S2 ME2SA4**	**C614_217.4 S2 MX2SA4**	179	**C614_217.4 P80 BE80A4**	**C614_217.4 P80 BX80A4**	180
6.4	767	1.3	216.7	10000	**C513_216.7 S2 ME2SA4**	**C513_216.7 S2 MX2SA4**	175	**C513_216.7 P80 BE80A4**	**C513_216.7 P80 BX80A4**	176
7.0	700	1.4	197.9	10000	**C513_197.9 S2 ME2SA4**	**C513_197.9 S2 MX2SA4**	175	**C513_197.9 P80 BE80A4**	**C513_197.9 P80 BX80A4**	176
7.0	693	2.3	195.8	16000				**C613_195.8 P80 BE80A4**	**C613_195.8 P80 BX80A4**	180
7.1	687	3.3	194.1	25000				**C703_194.1 P80 BE80A4**	**C703_194.1 P80 BX80A4**	184
7.7	637	0.9	179.9	7000	**C413_179.9 S2 ME2SA4**	**C413_179.9 S2 MX2SA4**	171	**C413_179.9 P80 BE80A4**	**C413_179.9 P80 BX80A4**	172
7.7	632	2.5	178.6	16000				**C613_178.6 P80 BE80A4**	**C613_178.6 P80 BX80A4**	180
7.9	622	1.6	175.8	10000	**C513_175.8 S2 ME2SA4**	**C513_175.8 S2 MX2SA4**	175	**C513_175.8 P80 BE80A4**	**C513_175.8 P80 BX80A4**	176
8.4	582	2.7	164.5	16000				**C613_164.5 P80 BE80A4**	**C613_164.5 P80 BX80A4**	180
8.4	581	1.0	164.1	7000	**C413_164.1 S2 ME2SA4**	**C413_164.1 S2 MX2SA4**	171	**C413_164.1 P80 BE80A4**	**C413_164.1 P80 BX80A4**	172
8.6	568	1.8	160.5	10000	**C513_160.5 S2 ME2SA4**	**C513_160.5 S2 MX2SA4**	175	**C513_160.5 P80 BE80A4**	**C513_160.5 P80 BX80A4**	176
9.2	531	3.0	150.0	16000				**C613_150.0 P80 BE80A4**	**C613_150.0 P80 BX80A4**	180
9.4	522	1.9	147.4	10000	**C513_147.4 S2 ME2SA4**	**C513_147.4 S2 MX2SA4**	175	**C513_147.4 P80 BE80A4**	**C513_147.4 P80 BX80A4**	176
9.5	516	1.2	145.6	7000	**C413_145.6 S2 ME2SA4**	**C413_145.6 S2 MX2SA4**	171	**C413_145.6 P80 BE80A4**	**C413_145.6 P80 BX80A4**	172
9.8	497	3.2	140.5	16000				**C613_140.5 P80 BE80A4**	**C613_140.5 P80 BX80A4**	180
9.9	494	0.9	139.8	6500	**C363_139.8 S2 ME2SA4**	**C363_139.8 S2 MX2SA4**	167	**C363_139.8 P80 BE80A4**	**C363_139.8 P80 BX80A4**	168
10.3	477	2.1	134.6	10000	**C513_134.6 S2 ME2SA4**	**C513_134.6 S2 MX2SA4**	175	**C513_134.6 P80 BE80A4**	**C513_134.6 P80 BX80A4**	176
10.4	470	1.3	132.9	7000	**C413_132.9 S2 ME2SA4**	**C413_132.9 S2 MX2SA4**	171	**C413_132.9 P80 BE80A4**	**C413_132.9 P80 BX80A4**	172
11.0	445	1.0	125.8	6500	**C363_125.8 S2 ME2SA4**	**C363_125.8 S2 MX2SA4**	167	**C363_125.8 P80 BE80A4**	**C363_125.8 P80 BX80A4**	168
11.1	440	2.3	124.4	10000	**C513_124.4 S2 ME2SA4**	**C513_124.4 S2 MX2SA4**	175	**C513_124.4 P80 BE80A4**	**C513_124.4 P80 BX80A4**	176
11.4	427	1.4	120.6	7000	**C413_120.6 S2 ME2SA4**	**C413_120.6 S2 MX2SA4**	171	**C413_120.6 P80 BE80A4**	**C413_120.6 P80 BX80A4**	172
12.1	402	2.5	113.6	10000	**C513_113.6 S2 ME2SA4**	**C513_113.6 S2 MX2SA4**	175	**C513_113.6 P80 BE80A4**	**C513_113.6 P80 BX80A4**	176
12.4	394	1.1	111.5	6500	**C363_111.5 S2 ME2SA4**	**C363_111.5 S2 MX2SA4**	167	**C363_111.5 P80 BE80A4**	**C363_111.5 P80 BX80A4**	168
12.5	390	1.5	110.1	7000	**C413_110.1 S2 ME2SA4**	**C413_110.1 S2 MX2SA4**	171	**C413_110.1 P80 BE80A4**	**C413_110.1 P80 BX80A4**	172
13.5	362	1.7	102.3	7000	**C413_102.3 S2 ME2SA4**	**C413_102.3 S2 MX2SA4**	171	**C413_102.3 P80 BE80A4**	**C413_102.3 P80 BX80A4**	172
13.5	361	1.2	102.2	6500	**C363_102.2 S2 ME2SA4**	**C363_102.2 S2 MX2SA4**	167	**C363_102.2 P80 BE80A4**	**C363_102.2 P80 BX80A4**	168
13.6	360	2.8	101.8	10000	**C513_101.8 S2 ME2SA4**	**C513_101.8 S2 MX2SA4**	175	**C513_101.8 P80 BE80A4**	**C513_101.8 P80 BX80A4**	176
14.7	333	0.9	94.2	5500	**C323_94.2 S2 ME2SA4**	**C323_94.2 S2 MX2SA4**	163	**C323_94.2 P80 BE80A4**	**C323_94.2 P80 BX80A4**	164
14.8	330	1.8	93.3	7000	**C413_93.3 S2 ME2SA4**	**C413_93.3 S2 MX2SA4**	171	**C413_93.3 P80 BE80A4**	**C413_93.3 P80 BX80A4**	172
14.8	329	3.0	93.0	10000	**C513_93.0 S2 ME2SA4**	**C513_93.0 S2 MX2SA4**	175	**C513_93.0 P80 BE80A4**	**C513_93.0 P80 BX80A4**	176
15.0	325	1.4	91.9	6500	**C363_91.9 S2 ME2SA4**	**C363_91.9 S2 MX2SA4**	167	**C363_91.9 P80 BE80A4**	**C363_91.9 P80 BX80A4**	168
16.6	294	1.5	83.1	6500	**C363_83.1 S2 ME2SA4**	**C363_83.1 S2 MX2SA4**	167	**C363_83.1 P80 BE80A4**	**C363_83.1 P80 BX80A4**	168
16.7	292	1.0	82.6	5500	**C323_82.6 S2 ME2SA4**	**C323_82.6 S2 MX2SA4**	163	**C323_82.6 P80 BE80A4**	**C323_82.6 P80 BX80A4**	164
16.9	289	2.1	81.5	7000	**C413_81.5 S2 ME2SA4**	**C413_81.5 S2 MX2SA4**	171	**C413_81.5 P80 BE80A4**	**C413_81.5 P80 BX80A4**	172
17.8	274	1.6	77.6	6500	**C363_77.6 S2 ME2SA4**	**C363_77.6 S2 MX2SA4**	167	**C363_77.6 P80 BE80A4**	**C363_77.6 P80 BX80A4**	168
18.5	264	1.1	74.7	5500	**C323_74.7 S2 ME2SA4**	**C323_74.7 S2 MX2SA4**	163	**C323_74.7 P80 BE80A4**	**C323_74.7 P80 BX80A4**	164
18.6	263	2.3	74.4	7000	**C413_74.4 S2 ME2SA4**	**C413_74.4 S2 MX2SA4**	171	**C413_74.4 P80 BE80A4**	**C413_74.4 P80 BX80A4**	172
19.5	250	1.8	70.8	6500	**C363_70.8 S2 ME2SA4**	**C363_70.8 S2 MX2SA4**	167	**C363_70.8 P80 BE80A4**	**C363_70.8 P80 BX80A4**	168
20.7	241	0.9	66.8	5500				**C322_66.8 P80 BE80A4**	**C322_66.8 P80 BX80A4**	164
21.5	228	2.6	64.3	7000	**C413_64.3 S2 ME2SA4**	**C413_64.3 S2 MX2SA4**	171	**C413_64.3 P80 BE80A4**	**C413_64.3 P80 BX80A4**	172
22.2	219	2.1	62.0	6500	**C363_62.0 S2 ME2SA4**	**C363_62.0 S2 MX2SA4**	167	**C363_62.0 P80 BE80A4**	**C363_62.0 P80 BX80A4**	168
23.0	212	0.9	60.0	4280	**C223_60.0 S2 ME2SA4**	**C223_60.0 S2 MX2SA4**	159	**C223_60.0 P80 BE80A4**	**C223_60.0 P80 BX80A4**	160
23.2	214	1.0	59.4	5500	**C322_59.4 S2 ME2SA4**	**C322_59.4 S2 MX2SA4**	163	**C322_59.4 P80 BE80A4**	**C322_59.4 P80 BX80A4**	164
23.5	208	2.9	58.7	7000	**C413_58.7 S2 ME2SA4**	**C413_58.7 S2 MX2SA4**	171	**C413_58.7 P80 BE80A4**	**C413_58.7 P80 BX80A4**	172
24.6	198	2.3	56.2	6500	**C363_56.2 S2 ME2SA4**	**C363_56.2 S2 MX2SA4**	167	**C363_56.2 P80 BE80A4**	**C363_56.2 P80 BX80A4**	168
26.3	189	1.6	52.4	5500	**C322_52.4 S2 ME2SA4**	**C322_52.4 S2 MX2SA4**	163	**C322_52.4 P80 BE80A4**	**C322_52.4 P80 BX80A4**	164
26.8	182	3.3	51.5	7000	**C413_51.5 S2 ME2SA4**	**C413_51.5 S2 MX2SA4**	171	**C413_51.5 P80 BE80A4**	**C413_51.5 P80 BX80A4**	172
28.7	170	2.6	48.2	6500	**C363_48.2 S2 ME2SA4**	**C363_48.2 S2 MX2SA4**	167	**C363_48.2 P80 BE80A4**	**C363_48.2 P80 BX80A4**	168
30.0	163	1.8	45.3	5500	**C322_45.3 S2 ME2SA4**	**C322_45.3 S2 MX2SA4**	163	**C322_45.3 P80 BE80A4**	**C322_45.3 P80 BX80A4**	164
31.0	162	3.1	44.8	7000	**C412_44.8 S2 ME2SA4**	**C412_44.8 S2 MX2SA4**	171	**C412_44.8 P80 BE80A4**	**C412_44.8 P80 BX80A4**	172
32.0	154	2.9	43.5	6500	**C363_43.5 S2 ME2SA4**	**C363_43.5 S2 MX2SA4**	167	**C363_43.5 P80 BE80A4**	**C363_43.5 P80 BX80A4**	168
32.0	156	1.2	43.3	4190	**C222_43.3 S2 ME2SA4**	**C222_43.3 S2 MX2SA4**	159	**C222_43.3 P80 BE80A4**	**C222_43.3 P80 BX80A4**	160
34.0	147	2.0	40.7	5500	**C322_40.7 S2 ME2SA4**	**C322_40.7 S2 MX2SA4**	163	**C322_40.7 P80 BE80A4**	**C322_40.7 P80 BX80A4**	164
36.0	135	3.3	38.1	6500	**C363_38.1 S2 ME2SA4**	**C363_38.1 S2 MX2SA4**	167	**C363_38.1 P80 BE80A4**	**C363_38.1 P80 BX80A4**	168
38.0	133	1.5	36.8	4070	**C222_36.8 S2 ME2SA4**	**C222_36.8 S2 MX2SA4**	159	**C222_36.8 P80 BE80A4**	**C222_36.8 P80 BX80A4**	160
38.0	130	2.3	36.1	5500	**C322_36.1 S2 ME2SA4**	**C322_36.1 S2 MX2SA4**	163	**C322_36.1 P80 BE80A4**	**C322_36.1 P80 BX80A4**	164
42.0	119	1.7	33.1	3970	**C222_33.1 S2 ME2SA4**	**C222_33.1 S2 MX2SA4**	159	**C222_33.1 P80 BE80A4**	**C222_33.1 P80 BX80A4**	160

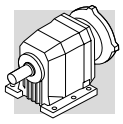

0.55 kW

n_2 min-1	M_2 Nm	S	i	R_{n2} N	IE2	IE3		IE2	IEC IE3	
42.0	119	2.5	33.1	5500	**C322_33.1 S2 ME2SA4**	**C322_33.1 S2 MX2SA4**	163	**C322_33.1 P80 BE80A4**	**C322_33.1 P80 BX80A4**	164
46.0	107	2.8	29.8	5500	**C322_29.8 S2 ME2SA4**	**C322_29.8 S2 MX2SA4**	163	**C322_29.8 P80 BE80A4**	**C322_29.8 P80 BX80A4**	164
47.0	107	1.9	29.6	3890	**C222_29.6 S2 ME2SA4**	**C222_29.6 S2 MX2SA4**	159	**C222_29.6 P80 BE80A4**	**C222_29.6 P80 BX80A4**	160
47.0	106	0.8	29.5	1820	**C122_29.5 S2 ME2SA4**	**C122_29.5 S2 MX2SA4**	155	**C122_29.5 P80 BE80A4**	**C122_29.5 P80 BX80A4**	156
51.0	98	2.0	27.2	3860	**C222_27.2 S2 ME2SA4**	**C222_27.2 S2 MX2SA4**	159	**C222_27.2 P80 BE80A4**	**C222_27.2 P80 BX80A4**	160
51.0	97	3.1	26.9	5500	**C322_26.9 S2 ME2SA4**	**C322_26.9 S2 MX2SA4**	163	**C322_26.9 P80 BE80A4**	**C322_26.9 P80 BX80A4**	164
54.0	92	1.0	25.4	2000	**C122_25.4 S2 ME2SA4**	**C122_25.4 S2 MX2SA4**	155	**C122_25.4 P80 BE80A4**	**C122_25.4 P80 BX80A4**	156
55.0	91	3.3	25.1	5500	**C322_25.1 S2 ME2SA4**	**C322_25.1 S2 MX2SA4**	163	**C322_25.1 P80 BE80A4**	**C322_25.1 P80 BX80A4**	164
57.0	88	2.3	24.3	3720	**C222_24.3 S2 ME2SA4**	**C222_24.3 S2 MX2SA4**	159	**C222_24.3 P80 BE80A4**	**C222_24.3 P80 BX80A4**	160
59.0	84	1.0	23.2	2000	**C122_23.2 S2 ME2SA4**	**C122_23.2 S2 MX2SA4**	155	**C122_23.2 P80 BE80A4**	**C122_23.2 P80 BX80A4**	156
64.0	77	2.5	21.5	3700	**C222_21.5 S2 ME2SA4**	**C222_21.5 S2 MX2SA4**	159	**C222_21.5 P80 BE80A4**	**C222_21.5 P80 BX80A4**	160
67.0	74	1.1	20.6	2000	**C122_20.6 S2 ME2SA4**	**C122_20.6 S2 MX2SA4**	155	**C122_20.6 P80 BE80A4**	**C122_20.6 P80 BX80A4**	156
69.0	72	2.6	20.0	3560	**C222_20.0 S2 ME2SA4**	**C222_20.0 S2 MX2SA4**	159	**C222_20.0 P80 BE80A4**	**C222_20.0 P80 BX80A4**	160
75.0	66	1.2	18.4	2000	**C122_18.4 S2 ME2SA4**	**C122_18.4 S2 MX2SA4**	155	**C122_18.4 P80 BE80A4**	**C122_18.4 P80 BX80A4**	156
76.0	65	2.8	18.1	3500	**C222_18.1 S2 ME2SA4**	**C222_18.1 S2 MX2SA4**	159	**C222_18.1 P80 BE80A4**	**C222_18.1 P80 BX80A4**	160
80.0	62	1.2	17.2	2000	**C122_17.2 S2 ME2SA4**	**C122_17.2 S2 MX2SA4**	155	**C122_17.2 P80 BE80A4**	**C122_17.2 P80 BX80A4**	156
87.0	57	3.1	15.8	3350	**C222_15.8 S2 ME2SA4**	**C222_15.8 S2 MX2SA4**	159	**C222_15.8 P80 BE80A4**	**C222_15.8 P80 BX80A4**	160
89.0	56	1.3	15.4	2000	**C122_15.4 S2 ME2SA4**	**C122_15.4 S2 MX2SA4**	155	**C122_15.4 P80 BE80A4**	**C122_15.4 P80 BX80A4**	156
95.0	53	3.2	14.5	3300	**C222_14.5 S2 ME2SA4**	**C222_14.5 S2 MX2SA4**	159	**C222_14.5 P80 BE80A4**	**C222_14.5 P80 BX80A4**	160
103.0	48	1.4	13.4	1990	**C122_13.4 S2 ME2SA4**	**C122_13.4 S2 MX2SA4**	155	**C122_13.4 P80 BE80A4**	**C122_13.4 P80 BX80A4**	156
116.0	43	1.6	11.9	1920	**C122_11.9 S2 ME2SA4**	**C122_11.9 S2 MX2SA4**	155	**C122_11.9 P80 BE80A4**	**C122_11.9 P80 BX80A4**	156
123.0	40	1.0	11.2	480	**C052_11.2 S2 ME2SA4**	**C052_11.2 S2 MX2SA4**	154			
137.0	36	1.7	10.1	1850	**C122_10.1 S2 ME2SA4**	**C122_10.1 S2 MX2SA4**	155	**C122_10.1 P80 BE80A4**	**C122_10.1 P80 BX80A4**	156
156.0	32	1.9	8.8	1780	**C122_8.8 S2 ME2SA4**	**C122_8.8 S2 MX2SA4**	155	**C122_8.8 P80 BE80A4**	**C122_8.8 P80 BX80A4**	156
181.0	28	2.0	7.6	1720	**C122_7.6 S2 ME2SA4**	**C122_7.6 S2 MX2SA4**	155	**C122_7.6 P80 BE80A4**	**C122_7.6 P80 BX80A4**	156
186.0	27	1.1	7.4	460	**C052_7.4 S2 ME2SA4**	**C052_7.4 S2 ME2SA4**	154			
206.0	24	1.2	6.7	450	**C052_6.7 S2 ME2SA4**	**C052_6.7 S2 ME2SA4**	154			
221.0	22	2.4	6.2	1590	**C122_6.2 S2 ME2SA4**	**C122_6.2 S2 ME2SA4**	155	**C122_6.2 P80 BE80A4**	**C122_6.2 P80 BE80A4**	156
246.0	20	2.5	5.6	1540	**C122_5.6 S2 ME2SA4**	**C122_5.6 S2 ME2SA4**	155	**C122_5.6 P80 BE80A4**	**C122_5.6 P80 BE80A4**	156
251.0	20	1.5	5.5	430	**C052_5.5 S2 ME2SA4**	**C052_5.5 S2 ME2SA4**	154			
283.0	18	2.7	4.9	1490	**C122_4.9 S2 ME2SA4**	**C122_4.9 S2 ME2SA4**	155	**C122_4.9 P80 BE80A4**	**C122_4.9 P80 BE80A4**	156
320.0	16	2.9	4.3	1420	**C122_4.3 S2 ME2SA4**	**C122_4.3 S2 ME2SA4**	155	**C122_4.3 P80 BE80A4**	**C122_4.3 P80 BE80A4**	156
378.0	13	3.2	3.7	1370	**C122_3.7 S2 ME2SA4**	**C122_3.7 S2 ME2SA4**	155	**C122_3.7 P80 BE80A4**	**C122_3.7 P80 BE80A4**	156

0.55 kW

n_2 min-1	M_2 Nm	S	i	R_{n2} N	IE3		IEC IE3	
1.1	4381	0.9	1274	35000			**C804_1274 P80 BXN80MA4**	187
1.1	4295	1.7	1240	60000			**C904_1240 P80 BXN80MA4**	190
1.3	3549	1.1	1032	35000			**C804_1032 P80 BXN80MA4**	187
1.4	3484	2.1	1006	60000			**C904_1006 P80 BXN80MA4**	190
1.6	2939	1.4	854.6	35000			**C804_854.6 P80 BXN80MA4**	187
1.6	2923	2.5	844.0	65000			**C904_844.0 P80 BXN80MA4**	190
1.9	2531	0.9	736.0	25000			**C704_736.0 P80 BXN80MA4**	184
1.9	2492	1.6	724.7	35000			**C804_724.7 P80 BXN80MA4**	187
2.1	2284	1.8	664.3	35000			**C804_664.3 P80 BXN80MA4**	187
2.1	2260	1.0	657.3	25000			**C704_657.3 P80 BXN80MA4**	184
2.4	1978	0.8	571.2	16000			**C614_571.2 P80 BXN80MA4**	180
2.5	1907	1.2	554.7	25000			**C704_554.7 P80 BXN80MA4**	184
2.6	1820	2.2	529.3	35000			**C804_529.3 P80 BXN80MA4**	187
3.0	1600	1.0	462.0	16000			**C614_462.0 P80 BXN80MA4**	180
3.1	1566	2.6	455.4	35000			**C804_455.4 P80 BXN80MA4**	187

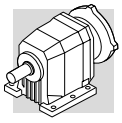

0.55 kW

n_2 min-1	M_2 Nm	S	i	R_{n2} N	IE3		IEC IE3	
3.1	1525	1.5	443.5	25000			**C704_443.5 P80 BXN80MA4**	184
3.3	1460	1.1	421.5	16000			**C614_421.5 P80 BXN80MA4**	180
3.6	1315	0.8	379.6	10000			**C514_379.6 P80 BXN80MA4**	176
3.7	1282	1.2	370.1	16000			**C614_370.1 P80 BXN80MA4**	180
3.8	1254	3.2	364.7	35000			**C804_364.7 P80 BXN80MA4**	187
4.0	1184	1.9	344.3	25000			**C704_344.3 P80 BXN80MA4**	184
4.1	1170	1.4	337.7	16000			**C614_337.7 P80 BXN80MA4**	180
4.2	1130	0.9	326.1	10000			**C514_326.1 P80 BXN80MA4**	176
4.6	1031	1.0	297.8	10000			**C514_297.8 P80 BXN80MA4**	176
5.0	953	1.7	275.3	16000			**C614_275.3 P80 BXN80MA4**	180
5.1	936	2.5	272.2	25000			**C704_272.2 P80 BXN80MA4**	184
5.2	914	1.1	263.8	10000			**C514_263.8 P80 BXN80MA4**	176
5.7	834	1.2	240.9	10000			**C514_240.9 P80 BXN80MA4**	176
5.8	847	2.7	239.3	25000			**C703_239.3 P80 BXN80MA4**	184
5.8	825	1.9	238.3	16000			**C614_238.3 P80 BXN80MA4**	180
6.2	782	2.9	220.9	25000			**C703_220.9 P80 BXN80MA4**	184
6.3	753	2.1	217.4	16000			**C614_217.4 P80 BXN80MA4**	180
6.4	767	1.3	216.7	10000			**C513_216.7 P80 BXN80MA4**	176
7.0	700	1.4	197.9	10000			**C513_197.9 P80 BXN80MA4**	176
7.0	693	2.3	195.8	16000			**C613_195.8 P80 BXN80MA4**	180
7.1	687	3.3	194.1	25000			**C703_194.1 P80 BXN80MA4**	184
7.7	637	0.9	179.9	7000			**C413_179.9 P80 BXN80MA4**	172
7.7	632	2.5	178.6	16000			**C613_178.6 P80 BXN80MA4**	180
7.9	622	1.6	175.8	10000			**C513_175.8 P80 BXN80MA4**	176
8.4	582	2.7	164.5	16000			**C613_164.5 P80 BXN80MA4**	180
8.4	581	1.0	164.1	7000			**C413_164.1 P80 BXN80MA4**	172
8.6	568	1.8	160.5	10000			**C513_160.5 P80 BXN80MA4**	176
9.2	531	3.0	150.0	16000			**C613_150.0 P80 BXN80MA4**	180
9.4	522	1.9	147.4	10000			**C513_147.4 P80 BXN80MA4**	176
9.5	516	1.2	145.6	7000			**C413_145.6 P80 BXN80MA4**	172
9.8	497	3.2	140.5	16000			**C613_140.5 P80 BXN80MA4**	180
9.9	494	0.9	139.8	6500			**C363_139.8 P80 BXN80MA4**	168
10.3	477	2.1	134.6	10000			**C513_134.6 P80 BXN80MA4**	176
10.4	470	1.3	132.9	7000			**C413_132.9 P80 BXN80MA4**	172
11.0	445	1.0	125.8	6500			**C363_125.8 P80 BXN80MA4**	168
11.1	440	2.3	124.4	10000			**C513_124.4 P80 BXN80MA4**	176
11.4	427	1.4	120.6	7000			**C413_120.6 P80 BXN80MA4**	172
12.1	402	2.5	113.6	10000			**C513_113.6 P80 BXN80MA4**	176
12.4	394	1.1	111.5	6500			**C363_111.5 P80 BXN80MA4**	168
12.5	390	1.5	110.1	7000			**C413_110.1 P80 BXN80MA4**	172
13.5	362	1.7	102.3	7000			**C413_102.3 P80 BXN80MA4**	172
13.5	361	1.2	102.2	6500			**C363_102.2 P80 BXN80MA4**	168
13.6	360	2.8	101.8	10000			**C513_101.8 P80 BXN80MA4**	176
14.7	333	0.9	94.2	5500	**C323_94.2 SX20 MXN20MA4**	163	**C323_94.2 P80 BXN80MA4**	164
14.8	330	1.8	93.3	7000			**C413_93.3 P80 BXN80MA4**	172
14.8	329	3.0	93.0	10000			**C513_93.0 P80 BXN80MA4**	176
15.0	325	1.4	91.9	6500			**C363_91.9 P80 BXN80MA4**	168
16.6	294	1.5	83.1	6500			**C363_83.1 P80 BXN80MA4**	168
16.7	292	1.0	82.6	5500	**C323_82.6 SX20 MXN20MA4**	163	**C323_82.6 P80 BXN80MA4**	164
16.9	289	2.1	81.5	7000			**C413_81.5 P80 BXN80MA4**	172
17.8	274	1.6	77.6	6500			**C363_77.6 P80 BXN80MA4**	168
18.5	264	1.1	74.7	5500	**C323_74.7 SX20 MXN20MA4**	163	**C323_74.7 P80 BXN80MA4**	164

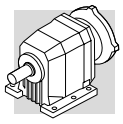

0.55 kW

n_2 min-1	M_2 Nm	S	i	R_{n2} N	IE3		IEC IE3	
18.6	263	2.3	74.4	7000			**C413_74.4 P80 BXN80MA4**	172
19.5	250	1.8	70.8	6500			**C363_70.8 P80 BXN80MA4**	168
20.7	241	0.9	66.8	5500			**C322_66.8 P80 BXN80MA4**	164
21.5	228	2.6	64.3	7000			**C413_64.3 P80 BXN80MA4**	172
22.2	219	2.1	62.0	6500			**C363_62.0 P80 BXN80MA4**	168
23.0	212	0.9	60.0	4280	**C223_60.0 SX20 MXN20MA4**	159	**C223_60.0 P80 BXN80MA4**	160
23.2	214	1.0	59.4	5500			**C322_59.4 P80 BXN80MA4**	164
23.5	208	2.9	58.7	7000			**C413_58.7 P80 BXN80MA4**	172
24.6	198	2.3	56.2	6500			**C363_56.2 P80 BXN80MA4**	168
26.3	189	1.6	52.4	5500			**C322_52.4 P80 BXN80MA4**	164
26.8	182	3.3	51.5	7000			**C413_51.5 P80 BXN80MA4**	172
28.7	170	2.6	48.2	6500			**C363_48.2 P80 BXN80MA4**	168
30.0	163	1.8	45.3	5500			**C322_45.3 P80 BXN80MA4**	164
31.0	162	3.1	44.8	7000			**C412_44.8 P80 BXN80MA4**	172
32.0	154	2.9	43.5	6500			**C363_43.5 P80 BXN80MA4**	168
32.0	156	1.2	43.3	4190	**C222_43.3 SX20 MXN20MA4**	159	**C222_43.3 P80 BXN80MA4**	160
34.0	147	2.0	40.7	5500			**C322_40.7 P80 BXN80MA4**	164
36.0	135	3.3	38.1	6500			**C363_38.1 P80 BXN80MA4**	168
38.0	133	1.5	36.8	4070	**C222_36.8 SX20 MXN20MA4**	159	**C222_36.8 P80 BXN80MA4**	160
38.0	130	2.3	36.1	5500			**C322_36.1 P80 BXN80MA4**	164
42.0	119	1.7	33.1	3970	**C222_33.1 SX20 MXN20MA4**	159	**C222_33.1 P80 BXN80MA4**	160
42.0	119	2.5	33.1	5500			**C322_33.1 P80 BXN80MA4**	164
46.0	107	2.8	29.8	5500			**C322_29.8 P80 BXN80MA4**	164
47.0	107	1.9	29.6	3890	**C222_29.6 SX20 MXN20MA4**	159	**C222_29.6 P80 BXN80MA4**	160
47.0	106	0.8	29.5	1820	**C122_29.5 SX20 MXN20MA4**	155	**C122_29.5 P80 BXN80MA4**	156
51.0	98	2.0	27.2	3860	**C222_27.2 SX20 MXN20MA4**	159	**C222_27.2 P80 BXN80MA4**	160
51.0	97	3.1	26.9	5500			**C322_26.9 P80 BXN80MA4**	164
54.0	92	1.0	25.4	2000	**C122_25.4 SX20 MXN20MA4**	155	**C122_25.4 P80 BXN80MA4**	156
55.0	91	3.3	25.1	5500			**C322_25.1 P80 BXN80MA4**	164
57.0	88	2.3	24.3	3720	**C222_24.3 SX20 MXN20MA4**	159	**C222_24.3 P80 BXN80MA4**	160
59.0	84	1.0	23.2	2000	**C122_23.2 SX20 MXN20MA4**	155	**C122_23.2 P80 BXN80MA4**	156
64.0	77	2.5	21.5	3700	**C222_21.5 SX20 MXN20MA4**	159	**C222_21.5 P80 BXN80MA4**	160
67.0	74	1.1	20.6	2000	**C122_20.6 SX20 MXN20MA4**	155	**C122_20.6 P80 BXN80MA4**	156
69.0	72	2.6	20.0	3560	**C222_20.0 SX20 MXN20MA4**	159	**C222_20.0 P80 BXN80MA4**	160
75.0	66	1.2	18.4	2000	**C122_18.4 SX20 MXN20MA4**	155	**C122_18.4 P80 BXN80MA4**	156
76.0	65	2.8	18.1	3500	**C222_18.1 SX20 MXN20MA4**	159	**C222_18.1 P80 BXN80MA4**	160
80.0	62	1.2	17.2	2000	**C122_17.2 SX20 MXN20MA4**	155	**C122_17.2 P80 BXN80MA4**	156
87.0	57	3.1	15.8	3350	**C222_15.8 SX20 MXN20MA4**	159	**C222_15.8 P80 BXN80MA4**	160
89.0	56	1.3	15.4	2000	**C122_15.4 SX20 MXN20MA4**	155	**C122_15.4 P80 BXN80MA4**	156
95.0	53	3.2	14.5	3300	**C222_14.5 SX20 MXN20MA4**	159	**C222_14.5 P80 BXN80MA4**	160
103.0	48	1.4	13.4	1990	**C122_13.4 SX20 MXN20MA4**	155	**C122_13.4 P80 BXN80MA4**	156
116.0	43	1.6	11.9	1920	**C122_11.9 SX20 MXN20MA4**	155	**C122_11.9 P80 BXN80MA4**	156
137.0	36	1.7	10.1	1850	**C122_10.1 SX20 MXN20MA4**	155	**C122_10.1 P80 BXN80MA4**	156
156.0	32	1.9	8.8	1780	**C122_8.8 SX20 MXN20MA4**	155	**C122_8.8 P80 BXN80MA4**	156
181.0	28	2.0	7.6	1720	**C122_7.6 SX20 MXN20MA4**	155	**C122_7.6 P80 BXN80MA4**	156
221.0	22	2.4	6.2	1590	**C122_6.2 SX20 MXN20MA4**	155	**C122_6.2 P80 BXN80MA4**	156
246.0	20	2.5	5.6	1540	**C122_5.6 SX20 MXN20MA4**	155	**C122_5.6 P80 BXN80MA4**	156
283.0	18	2.7	4.9	1490	**C122_4.9 SX20 MXN20MA4**	155	**C122_4.9 P80 BXN80MA4**	156
320.0	16	2.9	4.3	1420	**C122_4.3 SX20 MXN20MA4**	155	**C122_4.3 P80 BXN80MA4**	156
378.0	13	3.2	3.7	1370	**C122_3.7 SX20 MXN20MA4**	155	**C122_3.7 P80 BXN80MA4**	156

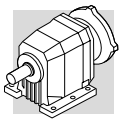

0.75 kW

n_2 min^{-1}	M_2 Nm	S	i	R_{n2} N	IE2	IE3		IEC IE2	IEC IE3	
0.86	7413	1.6	1081	85000	**C1004_1081 S3 ME3SA6**		192	**C1004_1081 P90 BE90S6**		193
0.93	6973	1.0	1006	60000	**C904_1006 S3 ME3SA6**		189	**C904_1006 P90 BE90S6**		190
1.2	5582	1.3	1240	60000	**C904_1240 S2 ME2SB4**	**C904_1240 S2 MX2SB4**	189	**C904_1240 P80 BE80B4**	**C904_1240 P80 BX80B4**	190
1.3	5117	1.4	1137	60000	**C904_1137 S2 ME2SB4**	**C904_1137 S2 MX2SB4**	189	**C904_1137 P80 BE80B4**	**C904_1137 P80 BX80B4**	190
1.3	4865	2.5	1081	85000	**C1004_1081 S2 ME2SB4**	**C1004_1081 S2 MX2SB4**	192	**C1004_1081 P80 BE80B4**	**C1004_1081 P80 BX80B4**	193
1.4	4528	1.6	1006	60000	**C904_1006 S2 ME2SB4**	**C904_1006 S2 MX2SB4**	189	**C904_1006 P80 BE80B4**	**C904_1006 P80 BX80B4**	190
1.4	4517	2.7	1004	85000	**C1004_1004 S2 ME2SB4**	**C1004_1004 S2 MX2SB4**	192	**C1004_1004 P80 BE80B4**	**C1004_1004 P80 BX80B4**	193
1.5	4256	0.9	945.7	35000	**C804_945.7 S2 ME2SB4**	**C804_945.7 S2 MX2SB4**	186	**C804_945.7 P80 BE80B4**	**C804_945.7 P80 BX80B4**	187
1.6	4150	1.7	922.3	60000	**C904_922.3 S2 ME2SB4**	**C904_922.3 S2 MX2SB4**	189	**C904_922.3 P80 BE80B4**	**C904_922.3 P80 BX80B4**	190
1.6	4087	2.9	908.2	85000	**C1004_908.2 S2 ME2SB4**	**C1004_908.2 S2 MX2SB4**	192	**C1004_908.2 P80 BE80B4**	**C1004_908.2 P80 BX80B4**	193
1.7	3846	1.0	854.6	35000	**C804_854.6 S2 ME2SB4**	**C804_854.6 S2 MX2SB4**	186	**C804_854.6 P80 BE80B4**	**C804_854.6 P80 BX80B4**	187
1.7	3798	1.9	844.0	6000	**C904_844.0 S2 ME2SB4**	**C904_844.0 S2 MX2SB4**	189	**C904_844.0 P80 BE80B4**	**C904_844.0 P80 BX80B4**	190
1.8	3525	1.1	783.4	35000	**C804_783.4 S2 ME2SB4**	**C804_783.4 S2 MX2SB4**	186	**C804_783.4 P80 BE80B4**	**C804_783.4 P80 BX80B4**	187
1.8	3481	2.1	773.6	60000	**C904_773.6 S2 ME2SB4**	**C904_773.6 S2 MX2SB4**	189	**C904_773.6 P80 BE80B4**	**C904_773.6 P80 BX80B4**	190
2.0	3261	1.2	724.7	35000	**C804_724.7 S2 ME2SB4**	**C804_724.7 S2 MX2SB4**	186	**C804_724.7 P80 BE80B4**	**C804_724.7 P80 BX80B4**	187
2.0	3205	2.2	712.2	60000	**C904_712.2 S2 ME2SB4**	**C904_712.2 S2 MX2SB4**	189	**C904_712.2 P80 BE80B4**	**C904_712.2 P80 BX80B4**	190
2.2	2989	1.3	664.3	35000	**C804_664.3 S2 ME2SB4**	**C804_664.3 S2 MX2SB4**	186	**C804_664.3 P80 BE80B4**	**C804_664.3 P80 BX80B4**	187
2.2	2938	2.5	652.8	60000	**C904_652.8 S2 ME2SB4**	**C904_652.8 S2 MX2SB4**	189	**C904_652.8 P80 BE80B4**	**C904_652.8 P80 BX80B4**	190
2.5	2623	2.7	582.8	60000	**C904_582.8 S2 ME2SB4**	**C904_582.8 S2 MX2SB4**	189	**C904_582.8 P80 BE80B4**	**C904_582.8 P80 BX80B4**	190
2.5	2598	1.5	577.4	35000	**C804_577.4 S2 ME2SB4**	**C804_577.4 S2 MX2SB4**	186	**C804_577.4 P80 BE80B4**	**C804_577.4 P80 BX80B4**	187
2.6	2496	0.9	554.7	25000	**C704_554.7 S2 ME2SB4**	**C704_554.7 S2 MX2SB4**	183	**C704_554.7 P80 BE80B4**	**C704_554.7 P80 BX80B4**	184
2.7	2404	3.0	534.2	60000	**C904_534.2 S2 ME2SB4**	**C904_534.2 S2 MX2SB4**	189	**C904_534.2 P80 BE80B4**	**C904_534.2 P80 BX80B4**	190
2.7	2382	1.7	529.3	35000	**C804_529.3 S2 ME2SB4**	**C804_529.3 S2 MX2SB4**	186	**C804_529.3 P80 BE80B4**	**C804_529.3 P80 BX80B4**	187
2.8	2304	1.0	512.0	25000	**C704_512.0 S2 ME2SB4**	**C704_512.0 S2 MX2SB4**	183	**C704_512.0 P80 BE80B4**	**C704_512.0 P80 BX80B4**	184
3.1	2049	2.0	455.4	35000	**C804_455.4 S2 ME2SB4**	**C804_455.4 S2 MX2SB4**	186	**C804_455.4 P80 BE80B4**	**C804_455.4 P80 BX80B4**	187
3.2	1996	1.2	443.5	25000	**C704_443.5 S2 ME2SB4**	**C704_443.5 S2 MX2SB4**	183	**C704_443.5 P80 BE80B4**	**C704_443.5 P80 BX80B4**	184
3.4	1897	0.8	421.5	16000	**C614_421.5 S2 ME2SB4**	**C614_421.5 S2 MX2SB4**	179	**C614_421.5 P80 BE80B4**	**C614_421.5 P80 BX80B4**	180
3.4	1879	2.1	417.5	35000	**C804_417.5 S2 ME2SB4**	**C804_417.5 S2 MX2SB4**	186	**C804_417.5 P80 BE80B4**	**C804_417.5 P80 BX80B4**	187
3.5	1842	1.2	409.4	25000	**C704_409.4 S2 ME2SB4**	**C704_409.4 S2 MX2SB4**	183	**C704_409.4 P80 BE80B4**	**C704_409.4 P80 BX80B4**	184
3.9	1666	1.0	370.1	16000	**C614_370.1 S2 ME2SB4**	**C614_370.1 S2 MX2SB4**	179	**C614_370.1 P80 BE80B4**	**C614_370.1 P80 BX80B4**	180
3.9	1696	1.4	239.3	25000	**C703_239.3 S3 ME3SA6**		183	**C703_239.3 P90 BE90S6**		184
3.9	1641	2.4	364.7	35000	**C804_364.7 S2 ME2SB4**	**C804_364.7 S2 MX2SB4**	186	**C804_364.7 P80 BE80B4**	**C804_364.7 P80 BX80B4**	187
4.2	1550	1.5	344.3	25000	**C704_344.3 S2 ME2SB4**	**C704_344.3 S2 MX2SB4**	183	**C704_344.3 P80 BE80B4**	**C704_344.3 P80 BX80B4**	184
4.2	1520	1.1	337.7	16000	**C614_337.7 S2 ME2SB4**	**C614_337.7 S2 MX2SB4**	179	**C614_337.7 P80 BE80B4**	**C614_337.7 P80 BX80B4**	180
4.3	1504	2.7	334.3	35000	**C804_334.3 S2 ME2SB4**	**C804_334.3 S2 MX2SB4**	186	**C804_334.3 P80 BE80B4**	**C804_334.3 P80 BX80B4**	187
4.3	1529	2.6	215.8	35000	**C803_215.8 S3 ME3SA6**		186	**C803_215.8 P90 BE90S6**		187
4.5	1430	1.6	317.9	25000	**C704_317.9 S2 ME2SB4**	**C704_317.9 S2 MX2SB4**	183	**C704_317.9 P80 BE80B4**	**C704_317.9 P80 BX80B4**	184
4.7	1358	1.2	301.7	16000	**C614_301.7 S2 ME2SB4**	**C614_301.7 S2 MX2SB4**	179	**C614_301.7 P80 BE80B4**	**C614_301.7 P80 BX80B4**	180
4.8	1387	1.2	195.8	16000	**C613_195.8 S3 ME3SA6**		179	**C613_195.8 P90 BE90S6**		180
5.2	1239	1.3	275.3	16000	**C614_275.3 S2 ME2SB4**	**C614_275.3 S2 MX2SB4**	179	**C614_275.3 P80 BE80B4**	**C614_275.3 P80 BX80B4**	180
5.2	1265	1.3	178.6	16000	**C613_178.6 S3 ME3SA6**		179	**C613_178.6 P90 BE90S6**		180
5.3	1225	1.9	272.2	25000	**C704_272.2 S2 ME2SB4**	**C704_272.2 S2 MX2SB4**	183	**C704_272.2 P80 BE80B4**	**C704_272.2 P80 BX80B4**	184
5.4	1187	0.8	263.8	10000	**C514_263.8 S2 ME2SB4**	**C514_263.8 S2 MX2SB4**	175	**C514_263.8 P80 BE80B4**	**C514_263.8 P80 BX80B4**	176
5.7	1165	1.4	164.5	16000	**C613_164.5 S3 ME3SA6**		179	**C613_164.5 P90 BE90S6**		180
5.7	1131	2.0	251.3	25000	**C704_251.3 S2 ME2SB4**	**C704_251.3 S2 MX2SB4**	183	**C704_251.3 P80 BE80B4**	**C704_251.3 P80 BX80B4**	184
5.9	1084	0.9	240.9	10000	**C514_240.9 S2 ME2SB4**	**C514_240.9 S2 MX2SB4**	175	**C514_240.9 P80 BE80B4**	**C514_240.9 P80 BX80B4**	176
6.0	1113	2.1	239.3	25000	**C703_239.3 S2 ME2SB4**	**C703_239.3 S2 MX2SB4**	183	**C703_239.3 P80 BE80B4**	**C703_239.3 P80 BX80B4**	184
6.0	1072	1.5	238.3	16000	**C614_238.3 S2 ME2SB4**	**C614_238.3 S2 MX2SB4**	179	**C614_238.3 P80 BE80B4**	**C614_238.3 P80 BX80B4**	180
6.5	1027	2.2	220.9	25000	**C703_220.9 S2 ME2SB4**	**C703_220.9 S2 MX2SB4**	183	**C703_220.9 P80 BE80B4**	**C703_220.9 P80 BX80B4**	184
6.6	978	1.6	217.4	16000	**C614_217.4 S2 ME2SB4**	**C614_217.4 S2 MX2SB4**	179	**C614_217.4 P80 BE80B4**	**C614_217.4 P80 BX80B4**	180
6.6	1008	1.0	216.7	10000	**C513_216.7 S2 ME2SB4**	**C513_216.7 S2 MX2SB4**	175	**C513_216.7 P80 BE80B4**	**C513_216.7 P80 BX80B4**	176
7.2	920	1.1	197.9	10000	**C513_197.9 S2 ME2SB4**	**C513_197.9 S2 MX2SB4**	175	**C513_197.9 P80 BE80B4**	**C513_197.9 P80 BX80B4**	176
7.3	881	1.8	195.8	16000	**C613_195.8 S2 ME2SB4**	**C613_195.8 S2 MX2SB4**	179	**C613_195.8 P80 BE80B4**	**C613_195.8 P80 BX80B4**	180
7.4	903	2.5	194.1	25000	**C703_194.1 S2 ME2SB4**	**C703_194.1 S2 MX2SB4**	183	**C703_194.1 P80 BE80B4**	**C703_194.1 P80 BX80B4**	184
8.0	833	2.8	179.2	25000	**C703_179.2 S2 ME2SB4**	**C703_179.2 S2 MX2SB4**	183	**C703_179.2 P80 BE80B4**	**C703_179.2 P80 BX80B4**	184
8.0	804	2.0	178.6	16000	**C613_178.6 S2 ME2SB4**	**C613_178.6 S2 MX2SB4**	179	**C613_178.6 P80 BE80B4**	**C613_178.6 P80 BX80B4**	180
8.1	817	1.2	175.8	10000	**C513_175.8 S2 ME2SB4**	**C513_175.8 S2 MX2SB4**	175	**C513_175.8 P80 BE80B4**	**C513_175.8 P80 BX80B4**	176
8.7	740	2.2	164.5	16000	**C613_164.5 S2 ME2SB4**	**C613_164.5 S2 MX2SB4**	179	**C613_164.5 P80 BE80B4**	**C613_164.5 P80 BX80B4**	180
8.8	757	3.0	162.8	25000	**C703_162.8 S2 ME2SB4**	**C703_162.8 S2 MX2SB4**	183	**C703_162.8 P80 BE80B4**	**C703_162.8 P80 BX80B4**	184
8.9	746	1.3	160.5	10000	**C513_160.5 S2 ME2SB4**	**C513_160.5 S2 MX2SB4**	175	**C513_160.5 P80 BE80B4**	**C513_160.5 P80 BX80B4**	176
9.5	675	2.4	150.0	16000	**C613_150.0 S2 ME2SB4**	**C613_150.0 S2 MX2SB4**	179	**C613_150.0 P80 BE80B4**	**C613_150.0 P80 BX80B4**	180
9.7	686	1.5	147.4	10000	**C513_147.4 S2 ME2SB4**	**C513_147.4 S2 MX2SB4**	175	**C513_147.4 P80 BE80B4**	**C513_147.4 P80 BX80B4**	176
10.2	632	2.5	140.5	16000	**C613_140.5 S2 ME2SB4**	**C613_140.5 S2 MX2SB4**	179	**C613_140.5 P80 BE80B4**	**C613_140.5 P80 BX80B4**	180
10.6	626	1.6	134.6	10000	**C513_134.6 S2 ME2SB4**	**C513_134.6 S2 MX2SB4**	175	**C513_134.6 P80 BE80B4**	**C513_134.6 P80 BX80B4**	176
10.8	618	1.0	132.9	7000	**C413_132.9 S2 ME2SB4**	**C413_132.9 S2 MX2SB4**	171	**C413_132.9 P80 BE80B4**	**C413_132.9 P80 BX80B4**	172
11.2	577	2.8	128.1	16000	**C613_128.1 S2 ME2SB4**	**C613_128.1 S2 MX2SB4**	179	**C613_128.1 P80 BE80B4**	**C613_128.1 P80 BX80B4**	180
11.5	579	1.7	124.4	10000	**C513_124.4 S2 ME2SB4**	**C513_124.4 S2 MX2SB4**	175	**C513_124.4 P80 BE80B4**	**C513_124.4 P80 BX80B4**	176
11.9	561	1.1	120.6	7000	**C413_120.6 S2 ME2SB4**	**C413_120.6 S2 MX2SB4**	171	**C413_120.6 P80 BE80B4**	**C413_120.6 P80 BX80B4**	172
12.6	511	3.1	113.6	16000	**C613_113.6 S2 ME2SB4**	**C613_113.6 S2 MX2SB4**	179	**C613_113.6 P80 BE80B4**	**C613_113.6 P80 BX80B4**	180

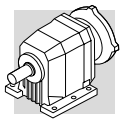

0.75 kW

n_2 min-1	M_2 Nm	S	i	R_{n2} N	IE2	IE3		IEC IE2	IEC IE3	
12.6	528	1.9	113.6	10000	**C513_113.6 S2 ME2SB4**	**C513_113.6 S2 MX2SB4**	175	**C513_113.6 P80 BE80B4**	**C513_113.6 P80 BX80B4**	176
13.0	512	1.2	110.1	7000	**C413_110.1 S2 ME2SB4**	**C413_110.1 S2 MX2SB4**	171	**C413_110.1 P80 BE80B4**	**C413_110.1 P80 BX80B4**	172
13.8	466	3.4	103.6	16000	**C613_103.6 S2 ME2SB4**	**C613_103.6 S2 MX2SB4**	179	**C613_103.6 P80 BE80B4**	**C613_103.6 P80 BX80B4**	180
14.0	476	1.3	102.3	7000	**C413_102.3 S2 ME2SB4**	**C413_102.3 S2 MX2SB4**	171	**C413_102.3 P80 BE80B4**	**C413_102.3 P80 BX80B4**	172
14.0	475	0.9	102.2	6500	**C363_102.2 S2 ME2SB4**	**C363_102.2 S2 MX2SB4**	167	**C363_102.2 P80 BE80B4**	**C363_102.2 P80 BX80B4**	168
14.0	473	2.1	101.8	10000	**C513_101.8 S2 ME2SB4**	**C513_101.8 S2 MX2SB4**	175	**C513_101.8 P80 BE80B4**	**C513_101.8 P80 BX80B4**	176
15.3	434	1.4	93.3	7000	**C413_93.3 S2 ME2SB4**	**C413_93.3 S2 MX2SB4**	171	**C413_93.3 P80 BE80B4**	**C413_93.3 P80 BX80B4**	172
15.4	432	2.3	93.0	10000	**C513_93.0 S2 ME2SB4**	**C513_93.0 S2 MX2SB4**	175	**C513_93.0 P80 BE80B4**	**C513_93.0 P80 BX80B4**	176
15.6	427	1.1	91.9	6500	**C363_91.9 S2 ME2SB4**	**C363_91.9 S2 MX2SB4**	167	**C363_91.9 P80 BE80B4**	**C363_91.9 P80 BX80B4**	168
17.2	387	1.2	83.1	6500	**C363_83.1 S2 ME2SB4**	**C363_83.1 S2 MX2SB4**	167	**C363_83.1 P80 BE80B4**	**C363_83.1 P80 BX80B4**	168
17.5	379	1.6	81.5	7000	**C413_81.5 S2 ME2SB4**	**C413_81.5 S2 MX2SB4**	171	**C413_81.5 P80 BE80B4**	**C413_81.5 P80 BX80B4**	172
17.9	371	2.7	79.9	10000	**C513_79.9 S2 ME2SB4**	**C513_79.9 S2 MX2SB4**	175	**C513_79.9 P80 BE80B4**	**C513_79.9 P80 BX80B4**	176
18.4	361	1.2	77.6	6500	**C363_77.6 S2 ME2SB4**	**C363_77.6 S2 MX2SB4**	167	**C363_77.6 P80 BE80B4**	**C363_77.6 P80 BX80B4**	168
19.2	346	1.7	74.4	7000	**C413_74.4 S2 ME2SB4**	**C413_74.4 S2 MX2SB4**	171	**C413_74.4 P80 BE80B4**	**C413_74.4 P80 BX80B4**	172
19.6	339	2.9	72.9	10000	**C513_72.9 S2 ME2SB4**	**C513_72.9 S2 MX2SB4**	175	**C513_72.9 P80 BE80B4**	**C513_72.9 P80 BX80B4**	176
20.2	329	1.4	70.8	6500	**C363_70.8 S2 ME2SB4**	**C363_70.8 S2 MX2SB4**	167	**C363_70.8 P80 BE80B4**	**C363_70.8 P80 BX80B4**	168
22.1	300	3.3	64.6	10000	**C513_64.6 S2 ME2SB4**	**C513_64.6 S2 MX2SB4**	175	**C513_64.6 P80 BE80B4**	**C513_64.6 P80 BX80B4**	176
22.2	299	2.0	64.3	7000	**C413_64.3 S2 ME2SB4**	**C413_64.3 S2 MX2SB4**	171	**C413_64.3 P80 BE80B4**	**C413_64.3 P80 BX80B4**	172
23.0	295	1.0	40.7	5500	**C322_40.7 S3 ME3SA6**		163	**C322_40.7 P90 BE90S6**		164
23.1	288	1.6	62.0	6500	**C363_62.0 S2 ME2SB4**	**C363_62.0 S2 MX2SB4**	167	**C363_62.0 P80 BE80B4**	**C363_62.0 P80 BX80B4**	168
24.4	273	2.2	58.7	7000	**C413_58.7 S2 ME2SB4**	**C413_58.7 S2 MX2SB4**	171	**C413_58.7 P80 BE80B4**	**C413_58.7 P80 BX80B4**	172
25.1	271	2.9	57.0	10000	**C512_57.0 S2 ME2SB4**	**C512_57.0 S2 MX2SB4**	175	**C512_57.0 P80 BE80B4**	**C512_57.0 P80 BX80B4**	176
25.5	261	1.7	56.2	6500	**C363_56.2 S2 ME2SB4**	**C363_56.2 S2 MX2SB4**	167	**C363_56.2 P80 BE80B4**	**C363_56.2 P80 BX80B4**	168
27.3	249	1.2	52.4	5500	**C322_52.4 S2 ME2SB4**	**C322_52.4 S2 MX2SB4**	163	**C322_52.4 P80 BE80B4**	**C322_52.4 P80 BX80B4**	164
27.8	239	2.5	51.5	7000	**C413_51.5 S2 ME2SB4**	**C413_51.5 S2 MX2SB4**	171	**C413_51.5 P80 BE80B4**	**C413_51.5 P80 BX80B4**	172
27.8	244	2.9	51.4	10000	**C512_51.4 S2 ME2SB4**	**C512_51.4 S2 MX2SB4**	175	**C512_51.4 P80 BE80B4**	**C512_51.4 P80 BX80B4**	176
29.7	224	2.0	48.2	6500	**C363_48.2 S2 ME2SB4**	**C363_48.2 S2 MX2SB4**	167	**C363_48.2 P80 BE80B4**	**C363_48.2 P80 BX80B4**	168
29.9	227	3.5	47.8	10000	**C512_47.8 S2 ME2SB4**	**C512_47.8 S2 MX2SB4**	175	**C512_47.8 P80 BE80B4**	**C512_47.8 P80 BX80B4**	176
30	218	2.7	47.0	7000	**C413_47.0 S2 ME2SB4**	**C413_47.0 S2 MX2SB4**	171	**C413_47.0 P80 BE80B4**	**C413_47.0 P80 BX80B4**	172
32	215	1.4	45.3	5500	**C322_45.3 S2 ME2SB4**	**C322_45.3 S2 MX2SB4**	163	**C322_45.3 P80 BE80B4**	**C322_45.3 P80 BX80B4**	164
32	213	2.4	44.8	7000	**C412_44.8 S2 ME2SB4**	**C412_44.8 S2 MX2SB4**	171	**C412_44.8 P80 BE80B4**	**C412_44.8 P80 BX80B4**	172
33	202	2.2	43.5	6500	**C363_43.5 S2 ME2SB4**	**C363_43.5 S2 MX2SB4**	167	**C363_43.5 P80 BE80B4**	**C363_43.5 P80 BX80B4**	168
33	206	0.9	43.3	3810	**C222_43.3 S2 ME2SB4**	**C222_43.3 S2 MX2SB4**	159	**C222_43.3 P80 BE80B4**	**C222_43.3 P80 BX80B4**	160
35	193	1.6	40.7	5500	**C322_40.7 S2 ME2SB4**	**C322_40.7 S2 MX2SB4**	163	**C322_40.7 P80 BE80B4**	**C322_40.7 P80 BX80B4**	164
38	177	2.5	38.1	6500	**C363_38.1 S2 ME2SB4**	**C363_38.1 S2 MX2SB4**	167	**C363_38.1 P80 BE80B4**	**C363_38.1 P80 BX80B4**	168
39	176	2.8	37.1	7000	**C412_37.1 S2 ME2SB4**	**C412_37.1 S2 MX2SB4**	171	**C412_37.1 P80 BE80B4**	**C412_37.1 P80 BX80B4**	172
39	175	1.1	36.8	3750	**C222_36.8 S2 ME2SB4**	**C222_36.8 S2 MX2SB4**	159	**C222_36.8 P80 BE80B4**	**C222_36.8 P80 BX80B4**	160
40	171	1.7	36.1	5500	**C322_36.1 S2 ME2SB4**	**C322_36.1 S2 MX2SB4**	163	**C322_36.1 P80 BE80B4**	**C322_36.1 P80 BX80B4**	164
41	161	2.8	34.6	6500	**C363_34.6 S2 ME2SB4**	**C363_34.6 S2 MX2SB4**	167	**C363_34.6 P80 BE80B4**	**C363_34.6 P80 BX80B4**	168
43	159	3.2	33.4	7000	**C412_33.4 S2 ME2SB4**	**C412_33.4 S2 MX2SB4**	171	**C412_33.4 P80 BE80B4**	**C412_33.4 P80 BX80B4**	172
43	157	1.3	33.1	3680	**C222_33.1 S2 ME2SB4**	**C222_33.1 S2 MX2SB4**	159	**C222_33.1 P80 BE80B4**	**C222_33.1 P80 BX80B4**	160
43	157	1.9	33.1	5500	**C322_33.1 S2 ME2SB4**	**C322_33.1 S2 MX2SB4**	163	**C322_33.1 P80 BE80B4**	**C322_33.1 P80 BX80B4**	164
48	141	2.1	29.8	5500	**C322_29.8 S2 ME2SB4**	**C322_29.8 S2 MX2SB4**	163	**C322_29.8 P80 BE80B4**	**C322_29.8 P80 BX80B4**	164
48	141	1.4	29.6	3630	**C222_29.6 S2 ME2SB4**	**C222_29.6 S2 MX2SB4**	159	**C222_29.6 P80 BE80B4**	**C222_29.6 P80 BX80B4**	160
50	134	3.4	28.7	6490	**C363_28.7 S2 ME2SB4**	**C363_28.7 S2 MX2SB4**	167	**C363_28.7 P80 BE80B4**	**C363_28.7 P80 BX80B4**	168
53	129	1.6	27.2	3600	**C222_27.2 S2 ME2SB4**	**C222_27.2 S2 MX2SB4**	159	**C222_27.2 P80 BE80B4**	**C222_27.2 P80 BX80B4**	160
53	128	2.3	26.9	5500	**C322_26.9 S2 ME2SB4**	**C322_26.9 S2 MX2SB4**	163	**C322_26.9 P80 BE80B4**	**C322_26.9 P80 BX80B4**	164
57	119	2.5	25.1	5460	**C322_25.1 S2 ME2SB4**	**C322_25.1 S2 MX2SB4**	163	**C322_25.1 P80 BE80B4**	**C322_25.1 P80 BX80B4**	164
59	115	1.7	24.3	3510	**C222_24.3 S2 ME2SB4**	**C222_24.3 S2 MX2SB4**	159	**C222_24.3 P80 BE80B4**	**C222_24.3 P80 BX80B4**	160
62	109	2.7	22.9	5300	**C322_22.9 S2 ME2SB4**	**C322_22.9 S2 MX2SB4**	163	**C322_22.9 P80 BE80B4**	**C322_22.9 P80 BX80B4**	164
67	102	1.9	21.5	3480	**C222_21.5 S2 ME2SB4**	**C222_21.5 S2 MX2SB4**	159	**C222_21.5 P80 BE80B4**	**C222_21.5 P80 BX80B4**	160
71	95	3.1	20.1	5150	**C322_20.1 S2 ME2SB4**	**C322_20.1 S2 MX2SB4**	163	**C322_20.1 P80 BE80B4**	**C322_20.1 P80 BX80B4**	164
71	95	2.0	20.0	3380	**C222_20.0 S2 ME2SB4**	**C222_20.0 S2 MX2SB4**	159	**C222_20.0 P80 BE80B4**	**C222_20.0 P80 BX80B4**	160
79	86	2.1	18.1	3350	**C222_18.1 S2 ME2SB4**	**C222_18.1 S2 MX2SB4**	159	**C222_18.1 P80 BE80B4**	**C222_18.1 P80 BX80B4**	160
83	82	0.9	17.2	1750	**C122_17.2 S2 ME2SB4**	**C122_17.2 S2 MX2SB4**	155	**C122_17.2 P80 BE80B4**	**C122_17.2 P80 BX80B4**	156
90	75	2.3	15.8	3210	**C222_15.8 S2 ME2SB4**	**C222_15.8 S2 MX2SB4**	159	**C222_15.8 P80 BE80B4**	**C222_15.8 P80 BX80B4**	160
93	73	1.0	15.4	1920	**C122_15.4 S2 ME2SB4**	**C122_15.4 S2 MX2SB4**	155	**C122_15.4 P80 BE80B4**	**C122_15.4 P80 BX80B4**	156
98	69	2.4	14.5	3200	**C222_14.5 S2 ME2SB4**	**C222_14.5 S2 MX2SB4**	159	**C222_14.5 P80 BE80B4**	**C222_14.5 P80 BX80B4**	160
107	64	1.1	13.4	1870	**C122_13.4 S2 ME2SB4**	**C122_13.4 S2 MX2SB4**	155	**C122_13.4 P80 BE80B4**	**C122_13.4 P80 BX80B4**	156
115	59	2.7	12.4	3030	**C222_12.4 S2 ME2SB4**	**C222_12.4 S2 MX2SB4**	159	**C222_12.4 P80 BE80B4**	**C222_12.4 P80 BX80B4**	160
120	56	1.2	11.9	1780	**C122_11.9 S2 ME2SB4**	**C122_11.9 S2 MX2SB4**	155	**C122_11.9 P80 BE80B4**	**C122_11.9 P80 BX80B4**	156
129	53	2.9	11.1	2980	**C222_11.1 S2 ME2SB4**	**C222_11.1 S2 MX2SB4**	159	**C222_11.1 P80 BE80B4**	**C222_11.1 P80 BX80B4**	160
142	48	1.3	10.1	1760	**C122_10.1 S2 ME2SB4**	**C122_10.1 S2 MX2SB4**	155	**C122_10.1 P80 BE80B4**	**C122_10.1 P80 BX80B4**	156
148	46	3.2	9.6	2840	**C222_9.6 S2 ME2SB4**	**C222_9.6 S2 MX2SB4**	159	**C222_9.6 P80 BE80B4**	**C222_9.6 P80 BX80B4**	160
162	42	1.4	8.8	1700	**C122_8.8 S2 ME2SB4**	**C122_8.8 S2 MX2SB4**	155	**C122_8.8 P80 BE80B4**	**C122_8.8 P80 BX80B4**	156
165	41	3.4	8.7	2760	**C222_8.7 S2 ME2SB4**	**C222_8.7 S2 MX2SB4**	159	**C222_8.7 P80 BE80B4**	**C222_8.7 P80 BX80B4**	160
188	36	1.5	7.6	1650	**C122_7.6 S2 ME2SB4**	**C122_7.6 S2 MX2SB4**	155	**C122_7.6 P80 BE80B4**	**C122_7.6 P80 BX80B4**	156
229	30	1.8	6.2	1530	**C122_6.2 S2 ME2SB4**	**C122_6.2 S2 MX2SB4**	155	**C122_6.2 P80 BE80B4**	**C122_6.2 P80 BX80B4**	156
240	28	2.4	11.9	1520	**C122_11.9 S2 ME2SA2**		155	**C122_11.9 P80 BE80A2**		156

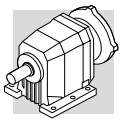

0.75 kW

n_2 min-1	M_2 Nm	S	i	R_{n2} N	IE2	IE3		IE2	IEC IE3	
255	27	1.9	5.6	1470	**C122_5.6 S2 ME2SB4**	**C122_5.6 S2 MX2SB4**	155	**C122_5.6 P80 BE80B4**	**C122_5.6 P80 BX80B4**	156
283	24	2.6	10.1	1490	**C122_10.1 S2 ME2SA2**		155	**C122_10.1 P80 BE80A2**		156
294	23	2.1	4.9	1440	**C122_4.9 S2 ME2SB4**	**C122_4.9 S2 MX2SB4**	155	**C122_4.9 P80 BE80B4**	**C122_4.9 P80 BX80B4**	156
323	21	2.8	8.8	1420	**C122_8.8 S2 ME2SA2**		155	**C122_8.8 P80 BE80A2**		156
332	20	2.2	4.3	1370	**C122_4.3 S2 ME2SB4**	**C122_4.3 S2 MX2SB4**	155	**C122_4.3 P80 BE80B4**	**C122_4.3 P80 BX80B4**	156
374	18	3.1	7.6	1380	**C122_7.6 S2 ME2SA2**		155	**C122_7.6 P80 BE80A2**		156
392	17	2.4	3.7	1330	**C122_3.7 S2 ME2SB4**	**C122_3.7 S2 MX2SB4**	155	**C122_3.7 P80 BE80B4**	**C122_3.7 P80 BX80B4**	156
446	15	2.6	3.2	1280	**C122_3.2 S2 ME2SB4**	**C122_3.2 S2 MX2SB4**	155	**C122_3.2 P80 BE80B4**	**C122_3.2 P80 BX80B4**	156
457	15	3.6	6.2	1280	**C122_6.2 S2 ME2SA2**		155	**C122_6.2 P80 BE80A2**		156
509	13	3.8	5.6	1240	**C122_5.6 S2 ME2SA2**		155	**C122_5.6 P80 BE80A2**		156
517	13	2.8	2.8	1230	**C122_2.8 S2 ME2SB4**	**C122_2.8 S2 MX2SB4**	155	**C122_2.8 P80 BE80B4**	**C122_2.8 P80 BX80B4**	156
585	12	4.1	4.9	1190	**C122_4.9 S2 ME2SA2**		155	**C122_4.9 P80 BE80A2**		156
661	10	4.4	4.3	1050	**C122_4.3 S2 ME2SA2**		155	**C122_4.3 P80 BE80A2**		156
781	9	4.8	3.7	1090	**C122_3.7 S2 ME2SA2**		155	**C122_3.7 P80 BE80A2**		156
889	8	5.2	3.2	1050	**C122_3.2 S2 ME2SA2**		155	**C122_3.2 P80 BE80A2**		156
1030	7	5.6	2.8	1010	**C122_2.8 S2 ME2SA2**		155	**C122_2.8 P80 BE80A2**		156

0.75 kW

n_2 min-1	M_2 Nm	S	i	R_{n2} N	IE3		IEC IE3	
1.2	5582	1.3	1240	60000			**C904_1240 P80 BXN80MB4**	190
1.3	5117	1.4	1137	60000			**C904_1137 P80 BXN80MB4**	190
1.3	4865	2.5	1081	85000			**C1004_1081 P80 BXN80MB4**	193
1.4	4528	1.6	1006	60000			**C904_1006 P80 BXN80MB4**	190
1.4	4517	2.7	1004	85000			**C1004_1004 P80 BXN80MB4**	193
1.5	4256	0.9	945.7	35000			**C804_945.7 P80 BXN80MB4**	187
1.6	4150	1.7	922.3	60000			**C904_922.3 P80 BXN80MB4**	190
1.6	4087	2.9	908.2	85000			**C1004_908.2 P80 BXN80MB4**	193
1.7	3846	1.0	854.6	35000			**C804_854.6 P80 BXN80MB4**	187
1.7	3798	1.9	844.0	6000			**C904_844.0 P80 BXN80MB4**	190
1.8	3525	1.1	783.4	35000			**C804_783.4 P80 BXN80MB4**	187
1.8	3481	2.1	773.6	60000			**C904_773.6 P80 BXN80MB4**	190
2.0	3261	1.2	724.7	35000			**C804_724.7 P80 BXN80MB4**	187
2.0	3205	2.2	712.2	60000			**C904_712.2 P80 BXN80MB4**	190
2.2	2989	1.3	664.3	35000			**C804_664.3 P80 BXN80MB4**	187
2.2	2938	2.5	652.8	60000			**C904_652.8 P80 BXN80MB4**	190
2.5	2623	2.7	582.8	60000			**C904_582.8 P80 BXN80MB4**	190
2.5	2598	1.5	577.4	35000			**C804_577.4 P80 BXN80MB4**	187
2.6	2496	0.9	554.7	25000			**C704_554.7 P80 BXN80MB4**	184
2.7	2404	3.0	534.2	60000			**C904_534.2 P80 BXN80MB4**	190
2.7	2382	1.7	529.3	35000			**C804_529.3 P80 BXN80MB4**	187
2.8	2304	1.0	512.0	25000			**C704_512.0 P80 BXN80MB4**	184
3.1	2049	2.0	455.4	35000			**C804_455.4 P80 BXN80MB4**	187
3.2	1996	1.2	443.5	25000			**C704_443.5 P80 BXN80MB4**	184
3.4	1897	0.8	421.5	16000			**C614_421.5 P80 BXN80MB4**	180
3.4	1879	2.1	417.5	35000			**C804_417.5 P80 BXN80MB4**	187
3.5	1842	1.2	409.4	25000			**C704_409.4 P80 BXN80MB4**	184
3.9	1666	1.0	370.1	16000			**C614_370.1 P80 BXN80MB4**	180
3.9	1641	2.4	364.7	35000			**C804_364.7 P80 BXN80MB4**	187
4.2	1550	1.5	344.3	25000			**C704_344.3 P80 BXN80MB4**	184
4.2	1520	1.1	337.7	16000			**C614_337.7 P80 BXN80MB4**	180
4.3	1504	2.7	334.3	35000			**C804_334.3 P80 BXN80MB4**	187
4.5	1430	1.6	317.9	25000			**C704_317.9 P80 BXN80MB4**	184
4.7	1358	1.2	301.7	16000			**C614_301.7 P80 BXN80MB4**	180
5.2	1239	1.3	275.3	16000			**C614_275.3 P80 BXN80MB4**	180
5.3	1225	1.9	272.2	25000			**C704_272.2 P80 BXN80MB4**	184
5.4	1187	0.8	263.8	10000			**C514_263.8 P80 BXN80MB4**	176
5.7	1131	2.0	251.3	25000			**C704_251.3 P80 BXN80MB4**	184
5.9	1084	0.9	240.9	10000			**C514_240.9 P80 BXN80MB4**	176
6.0	1113	2.1	239.3	25000			**C703_239.3 P80 BXN80MB4**	184
6.0	1072	1.5	238.3	16000			**C614_238.3 P80 BXN80MB4**	180
6.5	1027	2.2	220.9	25000			**C703_220.9 P80 BXN80MB4**	184

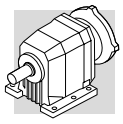

0.75 kW

n_2 min-1	M_2 Nm	S	i	R_{n2} N	IE3		IEC IE3	
6.6	978	1.6	217.4	16000			**C614_217.4 P80 BXN80MB4**	180
6.6	1008	1.0	216.7	10000			**C513_216.7 P80 BXN80MB4**	176
7.2	920	1.1	197.9	10000			**C513_197.9 P80 BXN80MB4**	176
7.3	881	1.8	195.8	16000			**C613_195.8 P80 BXN80MB4**	180
7.4	903	2.5	194.1	25000			**C703_194.1 P80 BXN80MB4**	184
8.0	833	2.8	179.2	25000			**C703_179.2 P80 BXN80MB4**	184
8.0	804	2.0	178.6	16000			**C613_178.6 P80 BXN80MB4**	180
8.1	817	1.2	175.8	10000			**C513_175.8 P80 BXN80MB4**	176
8.7	740	2.2	164.5	16000			**C613_164.5 P80 BXN80MB4**	180
8.8	757	3.0	162.8	25000			**C703_162.8 P80 BXN80MB4**	184
8.9	746	1.3	160.5	10000			**C513_160.5 P80 BXN80MB4**	176
9.5	675	2.4	150.0	16000			**C613_150.0 P80 BXN80MB4**	180
9.7	686	1.5	147.4	10000			**C513_147.4 P80 BXN80MB4**	176
10.2	632	2.5	140.5	16000			**C613_140.5 P80 BXN80MB4**	180
10.6	626	1.6	134.6	10000			**C513_134.6 P80 BXN80MB4**	176
10.8	618	1.0	132.9	7000			**C413_132.9 P80 BXN80MB4**	172
11.2	577	2.8	128.1	16000			**C613_128.1 P80 BXN80MB4**	180
11.5	579	1.7	124.4	10000			**C513_124.4 P80 BXN80MB4**	176
11.9	561	1.1	120.6	7000			**C413_120.6 P80 BXN80MB4**	172
12.6	511	3.1	113.6	16000			**C613_113.6 P80 BXN80MB4**	180
12.6	528	1.9	113.6	10000			**C513_113.6 P80 BXN80MB4**	176
13.0	512	1.2	110.1	7000			**C413_110.1 P80 BXN80MB4**	172
13.8	466	3.4	103.6	16000			**C613_103.6 P80 BXN80MB4**	180
14.0	476	1.3	102.3	7000			**C413_102.3 P80 BXN80MB4**	172
14.0	475	0.9	102.2	6500			**C363_102.2 P80 BXN80MB4**	168
14.0	473	2.1	101.8	10000			**C513_101.8 P80 BXN80MB4**	176
15.3	434	1.4	93.3	7000			**C413_93.3 P80 BXN80MB4**	172
15.4	432	2.3	93.0	10000			**C513_93.0 P80 BXN80MB4**	176
15.6	427	1.1	91.9	6500			**C363_91.9 P80 BXN80MB4**	168
17.2	387	1.2	83.1	6500			**C363_83.1 P80 BXN80MB4**	168
17.5	379	1.6	81.5	7000			**C413_81.5 P80 BXN80MB4**	172
17.9	371	2.7	79.9	10000			**C513_79.9 P80 BXN80MB4**	176
18.4	361	1.2	77.6	6500			**C363_77.6 P80 BXN80MB4**	168
19.2	346	1.7	74.4	7000			**C413_74.4 P80 BXN80MB4**	172
19.6	339	2.9	72.9	10000			**C513_72.9 P80 BXN80MB4**	176
20.2	329	1.4	70.8	6500			**C363_70.8 P80 BXN80MB4**	168
22.1	300	3.3	64.6	10000			**C513_64.6 P80 BXN80MB4**	176
22.2	299	2.0	64.3	7000			**C413_64.3 P80 BXN80MB4**	172
23.1	288	1.6	62.0	6500			**C363_62.0 P80 BXN80MB4**	168
24.4	273	2.2	58.7	7000			**C413_58.7 P80 BXN80MB4**	172
25.1	271	2.9	57.0	10000			**C512_57.0 P80 BXN80MB4**	176
25.5	261	1.7	56.2	6500			**C363_56.2 P80 BXN80MB4**	168
27.3	249	1.2	52.4	5500	**C322_52.4 SX20 MXN20MB4**	163	**C322_52.4 P80 BXN80MB4**	164
27.8	239	2.5	51.5	7000			**C413_51.5 P80 BXN80MB4**	172
27.8	244	2.9	51.4	10000			**C512_51.4 P80 BXN80MB4**	176
29.7	224	2.0	48.2	6500			**C363_48.2 P80 BXN80MB4**	168
29.9	227	3.5	47.8	10000			**C512_47.8 P80 BXN80MB4**	176
30	218	2.7	47.0	7000			**C413_47.0 P80 BXN80MB4**	172
32	215	1.4	45.3	5500			**C322_45.3 P80 BXN80MB4**	164
32	213	2.4	44.8	7000			**C412_44.8 P80 BXN80MB4**	172
33	202	2.2	43.5	6500			**C363_43.5 P80 BXN80MB4**	168
33	206	0.9	43.3	3810	**C222_43.3 SX20 MXN20MB4**	159	**C222_43.3 P80 BXN80MB4**	160
35	193	1.6	40.7	5500			**C322_40.7 P80 BXN80MB4**	164
38	177	2.5	38.1	6500			**C363_38.1 P80 BXN80MB4**	168
39	176	2.8	37.1	7000			**C412_37.1 P80 BXN80MB4**	172
39	175	1.1	36.8	3750	**C222_36.8 SX20 MXN20MB4**	159	**C222_36.8 P80 BXN80MB4**	160
40	171	1.7	36.1	5500			**C322_36.1 P80 BXN80MB4**	164
41	161	2.8	34.6	6500			**C363_34.6 P80 BXN80MB4**	168
43	159	3.2	33.4	7000			**C412_33.4 P80 BXN80MB4**	172
43	157	1.3	33.1	3680	**C222_33.1 SX20 MXN20MB4**	159	**C222_33.1 P80 BXN80MB4**	160
43	157	1.9	33.1	5500			**C322_33.1 P80 BXN80MB4**	164
48	141	2.1	29.8	5500			**C322_29.8 P80 BXN80MB4**	164
48	141	1.4	29.6	3630	**C222_29.6 SX20 MXN20MB4**	159	**C222_29.6 P80 BXN80MB4**	160
50	134	3.4	28.7	6490		159	**C363_28.7 P80 BXN80MB4**	168
53	129	1.6	27.2	3600	**C222_27.2 SX20 MXN20MB4**		**C222_27.2 P80 BXN80MB4**	160

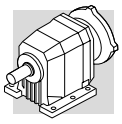

0.75 kW

n_2 min^{-1}	M_2 Nm	S	i	R_{n2} N	IE3		IEC IE3	
53	128	2.3	26.9	5500			**C322_26.9 P80 BXN80MB4**	164
57	119	2.5	25.1	5460			**C322_25.1 P80 BXN80MB4**	164
59	115	1.7	24.3	3510	**C222_24.3 SX20 MXN20MB4**	159	**C222_24.3 P80 BXN80MB4**	160
62	109	2.7	22.9	5300			**C322_22.9 P80 BXN80MB4**	164
67	102	1.9	21.5	3480	**C222_21.5 SX20 MXN20MB4**	159	**C222_21.5 P80 BXN80MB4**	160
71	95	3.1	20.1	5150			**C322_20.1 P80 BXN80MB4**	164
71	95	2.0	20.0	3380	**C222_20.0 SX20 MXN20MB4**	159	**C222_20.0 P80 BXN80MB4**	160
79	86	2.1	18.1	3350	**C222_18.1 SX20 MXN20MB4**	159	**C222_18.1 P80 BXN80MB4**	160
83	82	0.9	17.2	1750	**C122_17.2 SX20 MXN20MB4**	155	**C122_17.2 P80 BXN80MB4**	156
90	75	2.3	15.8	3210	**C222_15.8 SX20 MXN20MB4**	159	**C222_15.8 P80 BXN80MB4**	160
93	73	1.0	15.4	1920	**C122_15.4 SX20 MXN20MB4**	155	**C122_15.4 P80 BXN80MB4**	156
98	69	2.4	14.5	3200	**C222_14.5 SX20 MXN20MB4**	159	**C222_14.5 P80 BXN80MB4**	160
107	64	1.1	13.4	1870	**C122_13.4 SX20 MXN20MB4**	155	**C122_13.4 P80 BXN80MB4**	156
115	59	2.7	12.4	3030	**C222_12.4 SX20 MXN20MB4**	159	**C222_12.4 P80 BXN80MB4**	160
120	56	1.2	11.9	1780	**C122_11.9 SX20 MXN20MB4**	155	**C122_11.9 P80 BXN80MB4**	156
129	53	2.9	11.1	2980	**C222_11.1 SX20 MXN20MB4**	159	**C222_11.1 P80 BXN80MB4**	160
142	48	1.3	10.1	1760	**C122_10.1 SX20 MXN20MB4**	155	**C122_10.1 P80 BXN80MB4**	156
148	46	3.2	9.6	2840	**C222_9.6 SX20 MXN20MB4**	159	**C222_9.6 P80 BXN80MB4**	160
162	42	1.4	8.8	1700	**C122_8.8 SX20 MXN20MB4**	155	**C122_8.8 P80 BXN80MB4**	156
165	41	3.4	8.7	2760	**C222_8.7 SX20 MXN20MB4**	159	**C222_8.7 P80 BXN80MB4**	160
188	36	1.5	7.6	1650	**C122_7.6 SX20 MXN20MB4**	155	**C122_7.6 P80 BXN80MB4**	156
229	30	1.8	6.2	1530	**C122_6.2 SX20 MXN20MB4**	155	**C122_6.2 P80 BXN80MB4**	156
255	27	1.9	5.6	1470	**C122_5.6 SX20 MXN20MB4**	155	**C122_5.6 P80 BXN80MB4**	156
294	23	2.1	4.9	1440	**C122_4.9 SX20 MXN20MB4**	155	**C122_4.9 P80 BXN80MB4**	156
332	20	2.2	4.3	1370	**C122_4.3 SX20 MXN20MB4**	155	**C122_4.3 P80 BXN80MB4**	156
392	17	2.4	3.7	1330	**C122_3.7 SX20 MXN20MB4**	155	**C122_3.7 P80 BXN80MB4**	156
446	15	2.6	3.2	1280	**C122_3.2 SX20 MXN20MB4**	155	**C122_3.2 P80 BXN80MB4**	156
517	13	2.8	2.8	1230	**C122_2.8 SX20 MXN20MB4**	155		

1.1 kW

n_2 min^{-1}	M_2 Nm	S	i	R_{n2} N	IE2	IE3		IEC IE2	IE3	
0.87	10815	1.1	1081	85000	**C1004_1081 S3 ME3LA6**		192	**C1004_1081 P100 BE100M6**		193
0.94	10043	1.2	1004	85000	**C1004_908.2 S3 ME3LA6**		192	**C1004_908.2 P100 BE100M6**		193
1.3	7573	1.0	1137	60000	**C904_1137 S3 ME3SA4**	**C904_1137 S3 MX3SA4**	189	**C904_1137 P90 BE90S4**	**C904_1137 P90 BX90S4**	190
1.3	7200	1.7	1081	85000	**C1004_1081 S3 ME3SA4**	**C1004_1081 S3 MX3SA4**	192	**C1004_1081 P90 BE90S4**	**C1004_1081 P90 BX90S4**	193
1.4	6701	1.1	1006	60000	**C904_1006 S3 ME3SA4**	**C904_1006 S3 MX3SA4**	189	**C904_1006 P90 BE90S4**	**C904_1006 P90 BX90S4**	190
1.4	6686	1.8	1004	85000	**C1004_1004 S3 ME3SA4**	**C1004_1004 S3 MX3SA4**	192	**C1004_1004 P90 BE90S4**	**C1004_1004 P90 BX90S4**	193
1.6	6143	1.2	922.3	60000	**C904_922.3 S3 ME3SA4**	**C904_922.3 S3 MX3SA4**	189	**C904_922.3 P90 BE90S4**	**C904_922.3 P90 BX90S4**	190
1.6	6049	2.0	908.2	85000	**C1004_908.2 S3 ME3SA4**	**C1004_908.2 S3 MX3SA4**	192	**C1004_908.2 P90 BE90S4**	**C1004_908.2 P90 BX90S4**	193
1.7	5621	1.3	844.0	60000	**C904_844.0 S3 ME3SA4**	**C904_844.0 S3 MX3SA4**	189	**C904_844.0 P90 BE90S4**	**C904_844.0 P90 BX90S4**	190
1.7	5617	2.1	843.3	85000	**C1004_843.3 S3 ME3SA4**	**C1004_843.3 S3 MX3SA4**	192	**C1004_843.3 P90 BE90S4**	**C1004_843.3 P90 BX90S4**	193
1.8	5166	2.3	775.7	85000	**C1004_775.7 S3 ME3SA4**	**C1004_775.7 S3 MX3SA4**	192	**C1004_775.7 P90 BE90S4**	**C1004_775.7 P90 BX90S4**	193
1.8	5152	1.4	773.6	60000	**C904_773.6 S3 ME3SA4**	**C904_773.6 S3 MX3SA4**	189	**C904_773.6 P90 BE90S4**	**C904_773.6 P90 BX90S4**	190
2.0	4797	2.5	720.3	85000	**C1004_720.3 S3 ME3SA4**	**C1004_720.3 S3 MX3SA4**	192	**C1004_720.3 P90 BE90S4**	**C1004_720.3 P90 BX90S4**	193
2.0	4743	1.5	712.2	60000	**C904_712.2 S3 ME3SA4**	**C904_712.2 S3 MX3SA4**	189	**C904_712.2 P90 BE90S4**	**C904_712.2 P90 BX90S4**	190
2.2	4424	0.9	664.3	35000	**C804_664.3 S3 ME3SA4**	**C804_664.3 S3 MX3SA4**	186	**C804_664.3 P90 BE90S4**	**C804_664.3 P90 BX90S4**	187
2.2	4348	1.7	652.8	60000	**C904_652.8 S3 ME3SA4**	**C904_652.8 S3 MX3SA4**	189	**C904_652.8 P90 BE90S4**	**C904_652.8 P90 BX90S4**	190
2.3	4179	2.9	627.4	85000	**C1004_627.4 S3 ME3SA4**	**C1004_627.4 S3 MX3SA4**	192	**C1004_627.4 P90 BE90S4**	**C1004_627.4 P90 BX90S4**	193
2.5	3881	1.9	582.8	60000	**C904_582.8 S3 ME3SA4**	**C904_582.8 S3 MX3SA4**	189	**C904_582.8 P90 BE90S4**	**C904_582.8 P90 BX90S4**	190
2.5	3845	1.0	577.4	35000	**C804_577.4 S3 ME3SA4**	**C804_577.4 S3 MX3SA4**	186	**C804_577.4 P90 BE90S4**	**C804_577.4 P90 BX90S4**	187
2.7	3558	2.0	534.2	60000	**C904_534.2 S3 ME3SA4**	**C904_534.2 S3 MX3SA4**	189	**C904_534.2 P90 BE90S4**	**C904_534.2 P90 BX90S4**	190
2.7	3525	1.1	529.3	35000	**C804_529.3 S3 ME3SA4**	**C804_529.3 S3 MX3SA4**	186	**C804_529.3 P90 BE90S4**	**C804_529.3 P90 BX90S4**	187
3.1	3045	2.4	457.1	60000	**C904_457.1 S3 ME3SA4**	**C904_457.1 S3 MX3SA4**	189	**C904_457.1 P90 BE90S4**	**C904_457.1 P90 BX90S4**	190
3.1	3033	1.3	455.4	35000	**C804_455.4 S3 ME3SA4**	**C804_455.4 S3 MX3SA4**	186	**C804_455.4 P90 BE90S4**	**C804_455.4 P90 BX90S4**	187
3.4	2791	2.6	419.0	60000	**C904_419.0 S3 ME3SA4**	**C904_419.0 S3 MX3SA4**	189	**C904_419.0 P90 BE90S4**	**C904_419.0 P90 BX90S4**	190
3.4	2780	1.4	417.5	35000	**C804_417.5 S3 ME3SA4**	**C804_417.5 S3 MX3SA4**	186	**C804_417.5 P90 BE90S4**	**C804_417.5 P90 BX90S4**	187

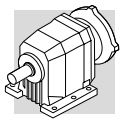

1.1 kW

n_2	M_2	S	i	R_{n2}	IE2	IE3		IE2	IEC IE3	
min-1	Nm			N						
3.9	2463	2.9	369.8	60000	**C904_369.8 S3 ME3SA4**	**C904_369.8 S3 MX3SA4**	189	**C904_369.8 P90 BE90S4**	**C904_369.8 P90 BX90S4**	190
3.9	2429	1.6	364.7	35000	**C804_364.7 S3 ME3SA4**	**C804_364.7 S3 MX3SA4**	186	**C804_364.7 P90 BE90S4**	**C804_364.7 P90 BX90S4**	187
4.2	2293	1.0	344.3	25000	**C704_344.3 S3 ME3SA4**	**C704_344.3 S3 MX3SA4**	183	**C704_344.3 P90 BE90S4**	**C704_344.3 P90 BX90S4**	184
4.3	2226	1.8	334.3	35000	**C804_334.3 S3 ME3SA4**	**C804_334.3 S3 MX3SA4**	186	**C804_334.3 P90 BE90S4**	**C804_334.3 P90 BX90S4**	187
4.5	2117	1.1	317.9	25000	**C704_317.9 S3 ME3SA4**	**C704_317.9 S3 MX3SA4**	183	**C704_317.9 P90 BE90S4**	**C704_317.9 P90 BX90S4**	184
4.7	2010	0.8	301.7	16000	**C614_301.7 S3 ME3SA4**	**C614_301.7 S3 MX3SA4**	179	**C614_301.7 P90 BE90S4**	**C614_301.7 P90 BX90S4**	180
5.0	1903	2.1	285.7	35000	**C804_285.7 S3 ME3SA4**	**C804_285.7 S3 MX3SA4**	186	**C804_285.7 P90 BE90S4**	**C804_285.7 P90 BX90S4**	187
5.2	1833	0.9	275.3	16000	**C614_275.3 S3 ME3SA4**	**C614_275.3 S3 MX3SA4**	179	**C614_275.3 P90 BE90S4**	**C614_275.3 P90 BX90S4**	180
5.3	1813	1.3	272.2	25000	**C704_272.2 S3 ME3SA4**	**C704_272.2 S3 MX3SA4**	183	**C704_272.2 P90 BE90S4**	**C704_272.2 P90 BX90S4**	184
5.5	1744	2.3	261.9	35000	**C804_261.9 S3 ME3SA4**	**C804_261.9 S3 MX3SA4**	186	**C804_261.9 P90 BE90S4**	**C804_261.9 P90 BX90S4**	187
5.7	1674	1.4	251.3	25000	**C704_251.3 S3 ME3SA4**	**C704_251.3 S3 MX3SA4**	183	**C704_251.3 P90 BE90S4**	**C704_251.3 P90 BX90S4**	184
5.7	1700	0.9	164.5	16000	**C613_164.5 S3 ME3LA6**		179	**C613_164.5 P100 BE100M6**		180
6.0	1647	1.4	239.3	25000	**C703_239.3 S3 ME3SA4**	**C703_239.3 S3 MX3SA4**	183	**C703_239.3 P90 BE90S4**	**C703_239.3 P90 BX90S4**	184
6.0	1587	1.0	238.3	16000	**C614_238.3 S3 ME3SA4**	**C614_238.3 S3 MX3SA4**	179	**C614_238.3 P90 BE90S4**	**C614_238.3 P90 BX90S4**	180
6.3	1551	1.0	150.0	16000	**C613_150.0 S3 ME3LA6**		179	**C613_150.0 P100 BE100M6**		180
6.5	1520	1.5	220.9	25000	**C703_220.9 S3 ME3SA4**	**C703_220.9 S3 MX3SA4**	183	**C703_220.9 P90 BE90S4**	**C703_220.9 P90 BX90S4**	184
6.6	1448	1.1	217.4	16000	**C614_217.4 S3 ME3SA4**	**C614_217.4 S3 MX3SA4**	179	**C614_217.4 P90 BE90S4**	**C614_217.4 P90 BX90S4**	180
6.6	1485	2.7	215.8	35000	**C803_215.8 S3 ME3SA4**	**C803_215.8 S3 MX3SA4**	186	**C803_215.8 P90 BE90S4**	**C803_215.8 P90 BX90S4**	187
7.2	1362	2.8	197.9	35000	**C803_197.9 S3 ME3SA4**	**C803_197.9 S3 MX3SA4**	186	**C803_197.9 P90 BE90S4**	**C803_197.9 P90 BX90S4**	187
7.3	1304	1.2	195.8	16000	**C613_195.8 S3 ME3SA4**	**C613_195.8 S3 MX3SA4**	179	**C613_195.8 P90 BE90S4**	**C613_195.8 P90 BX90S4**	180
7.4	1336	1.7	194.1	25000	**C703_194.1 S3 ME3SA4**	**C703_194.1 S3 MX3SA4**	183	**C703_194.1 P90 BE90S4**	**C703_194.1 P90 BX90S4**	184
8.0	1233	1.9	179.2	25000	**C703_179.2 S3 ME3SA4**	**C703_179.2 S3 MX3SA4**	183	**C703_179.2 P90 BE90S4**	**C703_179.2 P90 BX90S4**	184
8.0	1189	1.3	178.6	16000	**C613_178.6 S3 ME3SA4**	**C613_178.6 S3 MX3SA4**	179	**C613_178.6 P90 BE90S4**	**C613_178.6 P90 BX90S4**	180
8.5	1163	3.4	169.0	35000	**C803_169.0 S3 ME3SA4**	**C803_169.0 S3 MX3SA4**	186	**C803_169.0 P90 BE90S4**	**C803_169.0 P90 BX90S4**	187
8.7	1095	1.5	164.5	16000	**C613_164.5 S3 ME3SA4**	**C613_164.5 S3 MX3SA4**	179	**C613_164.5 P90 BE90S4**	**C613_164.5 P90 BX90S4**	180
8.8	1121	2.1	162.8	25000	**C703_162.8 S3 ME3SA4**	**C703_162.8 S3 MX3SA4**	183	**C703_162.8 P90 BE90S4**	**C703_162.8 P90 BX90S4**	184
8.9	1105	0.9	160.5	10000	**C513_160.5 S3 ME3SA4**	**C513_160.5 S3 MX3SA4**	175	**C513_160.5 P90 BE90S4**	**C513_160.5 P90 BX90S4**	176
9.5	1034	2.2	150.3	25000	**C703_150.3 S3 ME3SA4**	**C703_150.3 S3 MX3SA4**	183	**C703_150.3 P90 BE90S4**	**C703_150.3 P90 BX90S4**	184
9.5	999	1.6	150.0	16000	**C613_150.0 S3 ME3SA4**	**C613_150.0 S3 MX3SA4**	179	**C613_150.0 P90 BE90S4**	**C613_150.0 P90 BX90S4**	180
9.7	1015	1.0	147.4	10000	**C513_147.4 S3 ME3SA4**	**C513_147.4 S3 MX3SA4**	175	**C513_147.4 P90 BE90S4**	**C513_147.4 P90 BX90S4**	176
10.2	935	1.7	140.5	16000	**C613_140.5 S3 ME3SA4**	**C613_140.5 S3 MX3SA4**	179	**C613_140.5 P90 BE90S4**	**C613_140.5 P90 BX90S4**	180
10.4	946	2.4	137.4	25000	**C703_137.4 S3 ME3SA4**	**C703_137.4 S3 MX3SA4**	183	**C703_137.4 P90 BE90S4**	**C703_137.4 P90 BX90S4**	184
10.6	926	1.1	134.6	10000	**C513_134.6 S3 ME3SA4**	**C513_134.6 S3 MX3SA4**	175	**C513_134.6 P90 BE90S4**	**C513_134.6 P90 BX90S4**	176
11.2	853	1.9	128.1	16000	**C613_128.1 S3 ME3SA4**	**C613_128.1 S3 MX3SA4**	179	**C613_128.1 P90 BE90S4**	**C613_128.1 P90 BX90S4**	180
11.3	873	2.6	126.8	25000	**C703_126.8 S3 ME3SA4**	**C703_126.8 S3 MX3SA4**	183	**C703_126.8 P90 BE90S4**	**C703_126.8 P90 BX90S4**	184
11.5	856	1.2	124.4	10000	**C513_124.4 S3 ME3SA4**	**C513_124.4 S3 MX3SA4**	175	**C513_124.4 P90 BE90S4**	**C513_124.4 P90 BX90S4**	176
12.6	757	2.1	113.6	16000	**C613_113.6 S3 ME3SA4**	**C613_113.6 S3 MX3SA4**	179	**C613_113.6 P90 BE90S4**	**C613_113.6 P90 BX90S4**	180
12.6	782	1.3	113.6	10000	**C513_113.6 S3 ME3SA4**	**C513_113.6 S3 MX3SA4**	175	**C513_113.6 P90 BE90S4**	**C513_113.6 P90 BX90S4**	176
12.7	774	3.0	112.4	25000	**C703_112.4 S3 ME3SA4**	**C703_112.4 S3 MX3SA4**	183	**C703_112.4 P90 BE90S4**	**C703_112.4 P90 BX90S4**	184
13.8	690	2.3	103.6	16000	**C613_103.6 S3 ME3SA4**	**C613_103.6 S3 MX3SA4**	179	**C613_103.6 P90 BE90S4**	**C613_103.6 P90 BX90S4**	180
14.0	701	1.4	101.8	10000	**C513_101.8 S3 ME3SA4**	**C513_101.8 S3 MX3SA4**	175	**C513_101.8 P90 BE90S4**	**C513_101.8 P90 BX90S4**	176
15.3	642	0.9	93.3	7000	**C413_93.3 S3 ME3SA4**	**C413_93.3 S3 MX3SA4**	171	**C413_93.3 P90 BE90S4**	**C413_93.3 P90 BX90S4**	172
15.4	640	1.6	93.0	10000	**C513_93.0 S3 ME3SA4**	**C513_93.0 S3 MX3SA4**	175	**C513_93.0 P90 BE90S4**	**C513_93.0 P90 BX90S4**	176
15.7	606	2.6	91.0	16000	**C613_91.0 S3 ME3SA4**	**C613_91.0 S3 MX3SA4**	179	**C613_91.0 P90 BE90S4**	**C613_91.0 P90 BX90S4**	180
17.2	553	2.9	83.0	16000	**C613_83.0 S3 ME3SA4**	**C613_83.0 S3 MX3SA4**	179	**C613_83.0 P90 BE90S4**	**C613_83.0 P90 BX90S4**	180
17.5	561	1.1	81.5	7000	**C413_81.5 S3 ME3SA4**	**C413_81.5 S3 MX3SA4**	171	**C413_81.5 P90 BE90S4**	**C413_81.5 P90 BX90S4**	172
17.9	550	1.8	79.9	10000	**C513_79.9 S3 ME3SA4**	**C513_79.9 S3 MX3SA4**	175	**C513_79.9 P90 BE90S4**	**C513_79.9 P90 BX90S4**	176
19.2	512	1.2	74.4	7000	**C413_74.4 S3 ME3SA4**	**C413_74.4 S3 MX3SA4**	171	**C413_74.4 P90 BE90S4**	**C413_74.4 P90 BX90S4**	172
19.3	494	3.2	74.2	16000	**C613_74.2 S3 ME3SA4**	**C613_74.2 S3 MX3SA4**	179	**C613_74.2 P90 BE90S4**	**C613_74.2 P90 BX90S4**	180
19.6	502	2.0	72.9	10000	**C513_72.9 S3 ME3SA4**	**C513_72.9 S3 MX3SA4**	175	**C513_72.9 P90 BE90S4**	**C513_72.9 P90 BX90S4**	176
20.2	487	0.9	70.8	6500	**C363_70.8 S3 ME3SA4**	**C363_70.8 S3 MX3SA4**	167	**C363_70.8 P90 BE90S4**	**C363_70.8 P90 BX90S4**	168
21.1	451	3.5	67.7	16000	**C613_67.7 S3 ME3SA4**	**C613_67.7 S3 MX3SA4**	179	**C613_67.7 P90 BE90S4**	**C613_67.7 P90 BX90S4**	180
22.1	445	2.2	64.6	10000	**C513_64.6 S3 ME3SA4**	**C513_64.6 S3 MX3SA4**	175	**C513_64.6 P90 BE90S4**	**C513_64.6 P90 BX90S4**	176
22.2	442	1.4	64.3	7000	**C413_64.3 S3 ME3SA4**	**C413_64.3 S3 MX3SA4**	171	**C413_64.3 P90 BE90S4**	**C413_64.3 P90 BX90S4**	172
23.1	427	1.1	62.0	6500	**C363_62.0 S3 ME3SA4**	**C363_62.0 S3 MX3SA4**	167	**C363_62.0 P90 BE90S4**	**C363_62.0 P90 BX90S4**	168
24.2	406	2.5	59.0	10000	**C513_59.0 S3 ME3SA4**	**C513_59.0 S3 MX3SA4**	175	**C513_59.0 P90 BE90S4**	**C513_59.0 P90 BX90S4**	176
24.4	404	1.5	58.7	7000	**C413_58.7 S3 ME3SA4**	**C413_58.7 S3 MX3SA4**	171	**C413_58.7 P90 BE90S4**	**C413_58.7 P90 BX90S4**	172
25.1	401	2.0	57.0	10000	**C512_57.0 S3 ME3SA4**	**C512_57.0 S3 MX3SA4**	175	**C512_57.0 P90 BE90S4**	**C512_57.0 P90 BX90S4**	176
25.5	387	1.2	56.2	6500	**C363_56.2 S3 ME3SA4**	**C363_56.2 S3 MX3SA4**	167	**C363_56.2 P90 BE90S4**	**C363_56.2 P90 BX90S4**	168
27.8	354	1.7	51.5	7000	**C413_51.5 S3 ME3SA4**	**C413_51.5 S3 MX3SA4**	171	**C413_51.5 P90 BE90S4**	**C413_51.5 P90 BX90S4**	172
27.8	361	1.9	51.4	10000	**C512_51.4 S3 ME3SA4**	**C512_51.4 S3 MX3SA4**	175	**C512_51.4 P90 BE90S4**	**C512_51.4 P90 BX90S4**	176
27.9	352	2.8	51.2	10000	**C513_51.2 S3 ME3SA4**	**C513_51.2 S3 MX3SA4**	175	**C513_51.2 P90 BE90S4**	**C513_51.2 P90 BX90S4**	176
29.7	331	1.4	48.2	6500	**C363_48.2 S3 ME3SA4**	**C363_48.2 S3 MX3SA4**	167	**C363_48.2 P90 BE90S4**	**C363_48.2 P90 BX90S4**	168
29.9	336	2.4	47.8	10000	**C512_47.8 S3 ME3SA4**	**C512_47.8 S3 MX3SA4**	175	**C512_47.8 P90 BE90S4**	**C512_47.8 P90 BX90S4**	176
30	323	1.9	47.0	7000	**C413_47.0 S3 ME3SA4**	**C413_47.0 S3 MX3SA4**	171	**C413_47.0 P90 BE90S4**	**C413_47.0 P90 BX90S4**	172

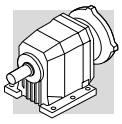

1.1 kW

n_2	M_2	S	i	R_{n2}	IE2	IE3		IEC IE2	IEC IE3	
min-1	Nm			N						
31	322	3.1	46.7	10000	**C513_46.7 S3 ME3SA4**	**C513_46.7 S3 MX3SA4**	175	**C513_46.7 P90 BE90S4**	**C513_46.7 P90 BX90S4**	176
32	318	0.9	45.3	5500	**C322_45.3 S3 ME3SA4**	**C322_45.3 S3 MX3SA4**	163	**C322_45.3 P90 BE90S4**	**C322_45.3 P90 BX90S4**	164
32	315	1.6	44.8	7000	**C412_44.8 S3 ME3SA4**	**C412_44.8 S3 MX3SA4**	171	**C412_44.8 P90 BE90S4**	**C412_44.8 P90 BX90S4**	172
33	299	1.5	43.5	6500	**C363_43.5 S3 ME3SA4**	**C363_43.5 S3 MX3SA4**	167	**C363_43.5 P90 BE90S4**	**C363_43.5 P90 BX90S4**	168
33	303	2.5	43.1	10000	**C512_43.1 S3 ME3SA4**	**C512_43.1 S3 MX3SA4**	175	**C512_43.1 P90 BE90S4**	**C512_43.1 P90 BX90S4**	176
35	286	1.0	40.7	5500	**C322_40.7 S3 ME3SA4**	**C322_40.7 S3 MX3SA4**	163	**C322_40.7 P90 BE90S4**	**C322_40.7 P90 BX90S4**	164
35	284	2.8	40.4	10000	**C512_40.4 S3 ME3SA4**	**C512_40.4 S3 MX3SA4**	175	**C512_40.4 P90 BE90S4**	**C512_40.4 P90 BX90S4**	176
35	278	2.2	40.3	7000	**C413_40.3 S3 ME3SA4**	**C413_40.3 S3 MX3SA4**	171	**C413_40.3 P90 BE90S4**	**C413_40.3 P90 BX90S4**	172
38	262	1.7	38.1	6500	**C363_38.1 S3 ME3SA4**	**C363_38.1 S3 MX3SA4**	167	**C363_38.1 P90 BE90S4**	**C363_38.1 P90 BX90S4**	168
39	261	1.9	37.1	7000	**C412_37.1 S3 ME3SA4**	**C412_37.1 S3 MX3SA4**	171	**C412_37.1 P90 BE90S4**	**C412_37.1 P90 BX90S4**	172
39	256	3.1	36.4	10000	**C512_36.4 S3 ME3SA4**	**C512_36.4 S3 MX3SA4**	175	**C512_36.4 P90 BE90S4**	**C512_36.4 P90 BX90S4**	176
40	254	1.2	36.1	5500	**C322_36.1 S3 ME3SA4**	**C322_36.1 S3 MX3SA4**	163	**C322_36.1 P90 BE90S4**	**C322_36.1 P90 BX90S4**	164
41	238	1.9	34.6	6300	**C363_34.6 S3 ME3SA4**	**C363_34.6 S3 MX3SA4**	167	**C363_34.6 P90 BE90S4**	**C363_34.6 P90 BX90S4**	168
43	235	2.1	33.4	7000	**C412_33.4 S3 ME3SA4**	**C412_33.4 S3 MX3SA4**	171	**C412_33.4 P90 BE90S4**	**C412_33.4 P90 BX90S4**	172
43	233	1.3	33.1	5420	**C322_33.1 S3 ME3SA4**	**C322_33.1 S3 MX3SA4**	163	**C322_33.1 P90 BE90S4**	**C322_33.1 P90 BX90S4**	164
45	221	2.3	31.4	7000	**C412_31.4 S3 ME3SA4**	**C412_31.4 S3 MX3SA4**	171	**C412_31.4 P90 BE90S4**	**C412_31.4 P90 BX90S4**	172
48	209	1.4	29.8	5360	**C322_29.8 S3 ME3SA4**	**C322_29.8 S3 MX3SA4**	163	**C322_29.8 P90 BE90S4**	**C322_29.8 P90 BX90S4**	164
48	208	1.0	29.6	3190	**C222_29.6 S3 ME3SA4**	**C222_29.6 S3 MX3SA4**	159	**C222_29.6 P90 BE90S4**	**C222_29.6 P90 BX90S4**	160
50	198	2.3	28.7	6190	**C363_28.7 S3 ME3SA4**	**C363_28.7 S3 MX3SA4**	167	**C363_28.7 P90 BE90S4**	**C363_28.7 P90 BX90S4**	168
51	199	2.5	28.3	7000	**C412_28.3 S3 ME3SA4**	**C412_28.3 S3 MX3SA4**	171	**C412_28.3 P90 BE90S4**	**C412_28.3 P90 BX90S4**	172
53	191	1.0	27.2	3160	**C222_27.2 S3 ME3SA4**	**C222_27.2 S3 MX3SA4**	159	**C222_27.2 P90 BE90S4**	**C222_27.2 P90 BX90S4**	160
53	189	1.6	26.9	5220	**C322_26.9 S3 ME3SA4**	**C322_26.9 S3 MX3SA4**	163	**C322_26.9 P90 BE90S4**	**C322_26.9 P90 BX90S4**	164
55	180	2.4	26.2	5930	**C363_26.2 S3 ME3SA4**	**C363_26.2 S3 MX3SA4**	167	**C363_26.2 P90 BE90S4**	**C363_26.2 P90 BX90S4**	168
57	177	1.7	25.1	5180	**C322_25.1 S3 ME3SA4**	**C322_25.1 S3 MX3SA4**	163	**C322_25.1 P90 BE90S4**	**C322_25.1 P90 BX90S4**	164
57	176	2.8	25.0	6950	**C412_25.0 S3 ME3SA4**	**C412_25.0 S3 MX3SA4**	171	**C412_25.0 P90 BE90S4**	**C412_25.0 P90 BX90S4**	172
59	171	1.2	24.3	3150	**C222_24.3 S3 ME3SA4**	**C222_24.3 S3 MX3SA4**	159	**C222_24.3 P90 BE90S4**	**C222_24.3 P90 BX90S4**	160
62	161	1.8	22.9	5050	**C322_22.9 S3 ME3SA4**	**C322_22.9 S3 MX3SA4**	163	**C322_22.9 P90 BE90S4**	**C322_22.9 P90 BX90S4**	164
63	159	3.2	22.6	6810	**C412_22.6 S3 ME3SA4**	**C412_22.6 S3 MX3SA4**	171	**C412_22.6 P90 BE90S4**	**C412_22.6 P90 BX90S4**	172
65	152	2.8	22.1	5680	**C363_22.1 S3 ME3SA4**	**C363_22.1 S3 MX3SA4**	167	**C363_22.1 P90 BE90S4**	**C363_22.1 P90 BX90S4**	168
67	151	1.3	21.5	3120	**C222_21.5 S3 ME3SA4**	**C222_21.5 S3 MX3SA4**	159	**C222_21.5 P90 BE90S4**	**C222_21.5 P90 BX90S4**	160
71	141	2.1	20.1	4920	**C322_20.1 S3 ME3SA4**	**C322_20.1 S3 MX3SA4**	163	**C322_20.1 P90 BE90S4**	**C322_20.1 P90 BX90S4**	164
71	141	1.3	20.0	3080	**C222_20.0 S3 ME3SA4**	**C222_20.0 S3 MX3SA4**	159	**C222_20.0 P90 BE90S4**	**C222_20.0 P90 BX90S4**	160
75	134	2.8	19.0	5580	**C362_19.0 S3 ME3SA4**	**C362_19.0 S3 MX3SA4**	167	**C362_19.0 P90 BE90S4**	**C362_19.0 P90 BX90S4**	168
79	128	2.2	18.2	4760	**C322_18.2 S3 ME3SA4**	**C322_18.2 S3 MX3SA4**	163	**C322_18.2 P90 BE90S4**	**C322_18.2 P90 BX90S4**	164
79	127	1.4	18.1	3020	**C222_18.1 S3 ME3SA4**	**C222_18.1 S3 MX3SA4**	159	**C222_18.1 P90 BE90S4**	**C222_18.1 P90 BX90S4**	160
83	121	3.1	17.2	5300	**C362_17.2 S3 ME3SA4**	**C362_17.2 S3 MX3SA4**	167	**C362_17.2 P90 BE90S4**	**C362_17.2 P90 BX90S4**	168
90	111	1.6	15.8	2970	**C222_15.8 S3 ME3SA4**	**C222_15.8 S3 MX3SA4**	159	**C222_15.8 P90 BE90S4**	**C222_15.8 P90 BX90S4**	160
92	110	2.5	15.6	4630	**C322_15.6 S3 ME3SA4**	**C322_15.6 S3 MX3SA4**	163	**C322_15.6 P90 BE90S4**	**C322_15.6 P90 BX90S4**	164
98	102	1.6	14.5	2940	**C222_14.5 S3 ME3SA4**	**C222_14.5 S3 MX3SA4**	159	**C222_14.5 P90 BE90S4**	**C222_14.5 P90 BX90S4**	160
102	99	2.5	14.1	4480	**C322_14.1 S3 ME3SA4**	**C322_14.1 S3 MX3SA4**	163	**C322_14.1 P90 BE90S4**	**C322_14.1 P90 BX90S4**	164
115	87	1.8	12.4	2840	**C222_12.4 S3 ME3SA4**	**C222_12.4 S3 MX3SA4**	159	**C222_12.4 P90 BE90S4**	**C222_12.4 P90 BX90S4**	160
116	87	2.8	12.3	4350	**C322_12.3 S3 ME3SA4**	**C322_12.3 S3 MX3SA4**	163	**C322_12.3 P90 BE90S4**	**C322_12.3 P90 BX90S4**	164
128	79	2.9	11.2	4200	**C322_11.2 S3 ME3SA4**	**C322_11.2 S3 MX3SA4**	163	**C322_11.2 P90 BE90S4**	**C322_11.2 P90 BX90S4**	164
129	78	2.0	11.1	2800	**C222_11.1 S3 ME3SA4**	**C222_11.1 S3 MX3SA4**	159	**C222_11.1 P90 BE90S4**	**C222_11.1 P90 BX90S4**	160
142	71	0.9	10.1	1400	**C122_10.1 S3 ME3SA4**	**C122_10.1 S3 MX3SA4**	155	**C122_10.1 P90 BE90S4**	**C122_10.1 P90 BX90S4**	156
148	68	2.1	9.6	2700	**C222_9.6 S3 ME3SA4**	**C222_9.6 S3 MX3SA4**	159	**C222_9.6 P90 BE90S4**	**C222_9.6 P90 BX90S4**	160
154	65	3.4	9.3	4030	**C322_6.3 S3 ME3SA4**	**C322_6.3 S3 MX3SA4**	163	**C322_6.3 P90 BE90S4**	**C322_6.3 P90 BX90S4**	164
162	62	1.0	8.8	1560	**C122_8.8 S3 ME3SA4**	**C122_8.8 S3 MX3SA4**	155	**C122_8.8 P90 BE90S4**	**C122_8.8 P90 BX90S4**	156
165	61	2.3	8.7	2630	**C222_8.7 S3 ME3SA4**	**C222_8.7 S3 MX3SA4**	159	**C222_8.7 P90 BE90S4**	**C222_8.7 P90 BX90S4**	160
188	54	1.0	7.6	1550	**C122_7.6 S3 ME3SA4**	**C122_7.6 S3 MX3SA4**	155	**C122_7.6 P90 BE90S4**	**C122_7.6 P90 BX90S4**	156
202	50	2.6	7.1	2510	**C222_7.1 S3 ME3SA4**	**C222_7.1 S3 MX3SA4**	159	**C222_7.1 P90 BE90S4**	**C222_7.1 P90 BX90S4**	160
229	44	1.2	6.2	1220	**C122_6.2 S3 ME3SA4**	**C122_6.2 S3 MX3SA4**	155	**C122_6.2 P90 BE90S4**	**C122_6.2 P90 BX90S4**	156
235	43	2.5	6.1	2380	**C222_6.1 S3 ME3SA4**	**C222_6.1 S3 MX3SA4**	159	**C222_6.1 P90 BE90S4**	**C222_6.1 P90 BX90S4**	160
238	42	1.6	11.9	1420	**C122_11.9 S2 ME2SB2**		155	**C122_11.9 P80 BE80B2**		156
255	39	3.9	11.1	2980	**C222_11.1 S2 ME2SB2**		159	**C222_11.1 P80 BE80B2**		160
255	39	1.3	5.6	1270	**C122_5.6 S3 ME3SA4**	**C122_5.6 S3 MX3SA4**	155	**C122_5.6 P90 BE90S4**	**C122_5.6 P90 BX90S4**	156
256	39	2.6	5.6	2350	**C222_5.6 S3 ME3SA4**	**C222_5.6 S3 MX3SA4**	159	**C222_5.6 P90 BE90S4**	**C222_5.6 P90 BX90S4**	160
259	39	1.1	3.7	1320	**C122_3.7 S3 ME3LA6**		155	**C122_3.7 P100 BE100M6**		156
281	35	1.8	10.1	1420	**C122_10.1 S2 ME2SB2**		155	**C122_10.1 P80 BE80B2**		156
294	34	1.4	4.9	1370	**C122_4.9 S3 ME3SA4**	**C122_4.9 S3 MX3SA4**	155	**C122_4.9 P90 BE90S4**	**C122_4.9 P90 BX90S4**	156
300	34	3.0	4.8	2240	**C222_4.8 S3 ME3SA4**	**C222_4.8 S3 MX3SA4**	159	**C222_4.8 P90 BE90S4**	**C222_4.8 P90 BX90S4**	160
320	31	1.9	8.8	1370	**C122_8.8 S2 ME2SB2**		155	**C122_8.8 P80 BE80B2**		156
332	30	1.5	4.3	1320	**C122_4.3 S3 ME3SA4**	**C122_4.3 S3 MX3SA4**	155	**C122_4.3 P90 BE90S4**	**C122_4.3 P90 BX90S4**	156
336	30	3.1	4.3	2200	**C222_4.3 S3 ME3SA4**	**C222_4.3 S3 MX3SA4**	159	**C222_4.3 P90 BE90S4**	**C222_4.3 P90 BX90S4**	160
341	29	1.3	2.8	1320	**C122_2.8 S3 M3SA6**		155	**C122_2.8 P90 BN90L6**		156

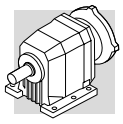

1.1 kW

n_2 min^{-1}	M_2 Nm	S	i	R_{n2} N	IE2	IE3		IEC IE2	IEC IE3	
347	29	2.8	2.7	2160	**C222_2.7 S3 M3SA6**		159	**C222_2.7 P90 BN90L6**		160
371	27	2.1	7.6	1330	**C122_7.6 S2 ME2SB2**		155	**C122_7.6 P80 BE80B2**		156
386	26	3.5	3.7	2090	**C222_3.7 S3 ME3SA4**	**C222_3.7 S3 MX3SA4**	159	**C222_3.7 P90 BE90S4**	**C222_3.7 P90 BX90S4**	160
392	26	1.6	3.7	1280	**C122_3.7 S3 ME3SA4**	**C122_3.7 S3 MX3SA4**	155	**C122_3.7 P90 BE90S4**	**C122_3.7 P90 BX90S4**	156
446	23	1.8	3.2	1230	**C122_3.2 S3 ME3SA4**	**C122_3.2 S3 MX3SA4**	155	**C122_3.2 P90 BE90S4**	**C122_3.2 P90 BX90S4**	156
454	22	2.4	6.2	1230	**C122_6.2 S2 ME2SB2**		155	**C122_6.2 P80 BE80B2**		156
505	20	2.6	5.6	1190	**C122_5.6 S2 ME2SB2**		155	**C122_5.6 P80 BE80B2**		156
517	19	1.9	2.8	1190	**C122_2.8 S3 ME3SA4**	**C122_2.8 S3 MX3SA4**	155	**C122_2.8 P90 BE90S4**	**C122_2.8 P90 BX90S4**	156
581	17	2.8	4.9	1150	**C122_4.9 S2 ME2SB2**		155	**C122_4.9 P80 BE80B2**		156
656	15	3.0	4.3	1110	**C122_4.3 S2 ME2SB2**		155	**C122_4.3 P80 BE80B2**		156
775	13	3.3	3.7	1070	**C122_3.7 S2 ME2SB2**		155	**C122_3.7 P80 BE80B2**		156
882	11	3.5	3.2	1020	**C122_3.2 S2 ME2SB2**		155	**C122_3.2 P80 BE80B2**		156
1023	10	3.8	2.8	980	**C122_2.8 S2 ME2SB2**		155	**C122_2.8 P80 BE80B2**		156

1.1 kW

n_2 min^{-1}	M_2 Nm	S	i	R_{n2} N	IE3		IEC IE3	
1.3	7573	1.0	1137	60000			**C904_1137 P90 BXN90S4**	190
1.3	7200	1.7	1081	85000			**C1004_1081 P90 BXN90S4**	193
1.4	6701	1.1	1006	60000			**C904_1006 P90 BXN90S4**	190
1.4	6686	1.8	1004	85000			**C1004_1004 P90 BXN90S4**	193
1.6	6143	1.2	922.3	60000			**C904_922.3 P90 BXN90S4**	190
1.6	6049	2.0	908.2	85000			**C1004_908.2 P90 BXN90S4**	193
1.7	5621	1.3	844.0	60000			**C904_844.0 P90 BXN90S4**	190
1.7	5617	2.1	843.3	85000			**C1004_843.3 P90 BXN90S4**	193
1.8	5166	2.3	775.7	85000			**C1004_775.7 P90 BXN90S4**	193
1.8	5152	1.4	773.6	60000			**C904_773.6 P90 BXN90S4**	190
2.0	4797	2.5	720.3	85000			**C1004_720.3 P90 BXN90S4**	193
2.0	4743	1.5	712.2	60000			**C904_712.2 P90 BXN90S4**	190
2.2	4424	0.9	664.3	35000			**C804_664.3 P90 BXN90S4**	187
2.2	4348	1.7	652.8	60000			**C904_652.8 P90 BXN90S4**	190
2.3	4179	2.9	627.4	85000			**C1004_627.4 P90 BXN90S4**	193
2.5	3881	1.9	582.8	60000			**C904_582.8 P90 BXN90S4**	190
2.5	3845	1.0	577.4	35000			**C804_577.4 P90 BXN90S4**	187
2.7	3558	2.0	534.2	60000			**C904_534.2 P90 BXN90S4**	190
2.7	3525	1.1	529.3	35000			**C804_529.3 P90 BXN90S4**	187
3.1	3045	2.4	457.1	60000			**C904_457.1 P90 BXN90S4**	190
3.1	3033	1.3	455.4	35000			**C804_455.4 P90 BXN90S4**	187
3.4	2791	2.6	419.0	60000			**C904_419.0 P90 BXN90S4**	190
3.4	2780	1.4	417.5	35000			**C804_417.5 P90 BXN90S4**	187
3.9	2463	2.9	369.8	60000			**C904_369.8 P90 BXN90S4**	190
3.9	2429	1.6	364.7	35000			**C804_364.7 P90 BXN90S4**	187
4.2	2293	1.0	344.3	25000			**C704_344.3 P90 BXN90S4**	184
4.3	2226	1.8	334.3	35000			**C804_334.3 P90 BXN90S4**	187
4.5	2117	1.1	317.9	25000			**C704_317.9 P90 BXN90S4**	184
4.7	2010	0.8	301.7	16000			**C614_301.7 P90 BXN90S4**	180
5.0	1903	2.1	285.7	35000			**C804_285.7 P90 BXN90S4**	187
5.2	1833	0.9	275.3	16000			**C614_275.3 P90 BXN90S4**	180
5.3	1813	1.3	272.2	25000			**C704_272.2 P90 BXN90S4**	184
5.5	1744	2.3	261.9	35000			**C804_261.9 P90 BXN90S4**	187
5.7	1674	1.4	251.3	25000			**C704_251.3 P90 BXN90S4**	184
6.0	1647	1.4	239.3	25000			**C703_239.3 P90 BXN90S4**	184
6.0	1587	1.0	238.3	16000			**C614_238.3 P90 BXN90S4**	180
6.5	1520	1.5	220.9	25000			**C703_220.9 P90 BXN90S4**	184

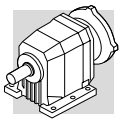

1.1 kW

n_2 min^{-1}	M_2 Nm	S	i	R_{n2} N	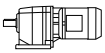 IE3		 IEC IE3	
6.6	1448	1.1	217.4	16000			**C614_217.4 P90 BXN90S4**	180
6.6	1485	2.7	215.8	35000			**C803_215.8 P90 BXN90S4**	187
7.2	1362	2.8	197.9	35000			**C803_197.9 P90 BXN90S4**	187
7.3	1304	1.2	195.8	16000			**C613_195.8 P90 BXN90S4**	180
7.4	1336	1.7	194.1	25000			**C703_194.1 P90 BXN90S4**	184
8.0	1233	1.9	179.2	25000			**C703_179.2 P90 BXN90S4**	184
8.0	1189	1.3	178.6	16000			**C613_178.6 P90 BXN90S4**	180
8.5	1163	3.4	169.0	35000			**C803_169.0 P90 BXN90S4**	187
8.7	1095	1.5	164.5	16000			**C613_164.5 P90 BXN90S4**	180
8.8	1121	2.1	162.8	25000			**C703_162.8 P90 BXN90S4**	184
8.9	1105	0.9	160.5	10000			**C513_160.5 P90 BXN90S4**	176
9.5	1034	2.2	150.3	25000			**C703_150.3 P90 BXN90S4**	184
9.5	999	1.6	150.0	16000			**C613_150.0 P90 BXN90S4**	180
9.7	1015	1.0	147.4	10000			**C513_147.4 P90 BXN90S4**	176
10.2	935	1.7	140.5	16000			**C613_140.5 P90 BXN90S4**	180
10.4	946	2.4	137.4	25000			**C703_137.4 P90 BXN90S4**	184
10.6	926	1.1	134.6	10000			**C513_134.6 P90 BXN90S4**	176
11.2	853	1.9	128.1	16000			**C613_128.1 P90 BXN90S4**	180
11.3	873	2.6	126.8	25000			**C703_126.8 P90 BXN90S4**	184
11.5	856	1.2	124.4	10000			**C513_124.4 P90 BXN90S4**	176
12.6	757	2.1	113.6	16000			**C613_113.6 P90 BXN90S4**	180
12.6	782	1.3	113.6	10000			**C513_113.6 P90 BXN90S4**	176
12.7	774	3.0	112.4	25000			**C703_112.4 P90 BXN90S4**	184
13.8	690	2.3	103.6	16000			**C613_103.6 P90 BXN90S4**	180
14.0	701	1.4	101.8	10000			**C513_101.8 P90 BXN90S4**	176
15.3	642	0.9	93.3	7000			**C413_93.3 P90 BXN90S4**	172
15.4	640	1.6	93.0	10000			**C513_93.0 P90 BXN90S4**	176
15.7	606	2.6	91.0	16000			**C613_91.0 P90 BXN90S4**	180
17.2	553	2.9	83.0	16000			**C613_83.0 P90 BXN90S4**	180
17.5	561	1.1	81.5	7000			**C413_81.5 P90 BXN90S4**	172
17.9	550	1.8	79.9	10000			**C513_79.9 P90 BXN90S4**	176
19.2	512	1.2	74.4	7000			**C413_74.4 P90 BXN90S4**	172
19.3	494	3.2	74.2	16000			**C613_74.2 P90 BXN90S4**	180
19.6	502	2.0	72.9	10000			**C513_72.9 P90 BXN90S4**	176
20.2	487	0.9	70.8	6500			**C363_70.8 P90 BXN90S4**	168
21.1	451	3.5	67.7	16000			**C613_67.7 P90 BXN90S4**	180
22.1	445	2.2	64.6	10000			**C513_64.6 P90 BXN90S4**	176
22.2	442	1.4	64.3	7000			**C413_64.3 P90 BXN90S4**	172
23.1	427	1.1	62.0	6500			**C363_62.0 P90 BXN90S4**	168
24.2	406	2.5	59.0	10000			**C513_59.0 P90 BXN90S4**	176
24.4	404	1.5	58.7	7000			**C413_58.7 P90 BXN90S4**	172
25.1	401	2.0	57.0	10000			**C512_57.0 P90 BXN90S4**	176
25.5	387	1.2	56.2	6500			**C363_56.2 P90 BXN90S4**	168
27.8	354	1.7	51.5	7000			**C413_51.5 P90 BXN90S4**	172
27.8	361	1.9	51.4	10000			**C512_51.4 P90 BXN90S4**	176
27.9	352	2.8	51.2	10000			**C513_51.2 P90 BXN90S4**	176
29.7	331	1.4	48.2	6500			**C363_48.2 P90 BXN90S4**	168
29.9	336	2.4	47.8	10000			**C512_47.8 P90 BXN90S4**	176
30	323	1.9	47.0	7000			**C413_47.0 P90 BXN90S4**	172
31	322	3.1	46.7	10000			**C513_46.7 P90 BXN90S4**	176
32	318	0.9	45.3	5500			**C322_45.3 P90 BXN90S4**	164
32	315	1.6	44.8	7000			**C412_44.8 P90 BXN90S4**	172
33	299	1.5	43.5	6500			**C363_43.5 P90 BXN90S4**	168
33	303	2.5	43.1	10000			**C512_43.1 P90 BXN90S4**	176
35	286	1.0	40.7	5500			**C322_40.7 P90 BXN90S4**	164
35	284	2.8	40.4	10000			**C512_40.4 P90 BXN90S4**	176
35	278	2.2	40.3	7000			**C413_40.3 P90 BXN90S4**	172
38	262	1.7	38.1	6500			**C363_38.1 P90 BXN90S4**	168
39	261	1.9	37.1	7000			**C412_37.1 P90 BXN90S4**	172
39	256	3.1	36.4	10000			**C512_36.4 P90 BXN90S4**	176
40	254	1.2	36.1	5500			**C322_36.1 P90 BXN90S4**	164
41	238	1.9	34.6	6300			**C363_34.6 P90 BXN90S4**	168
43	235	2.1	33.4	7000			**C412_33.4 P90 BXN90S4**	172
43	233	1.3	33.1	5420			**C322_33.1 P90 BXN90S4**	164
45	221	2.3	31.4	7000			**C412_31.4 P90 BXN90S4**	172

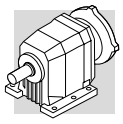

1.1 kW

n_2 min-1	M_2 Nm	S	i	R_{n2} N	IE3		IEC IE3	
48	209	1.4	29.8	5360			**C322_29.8 P90 BXN90S4**	164
48	208	1.0	29.6	3190			**C222_29.6 P90 BXN90S4**	160
50	198	2.3	28.7	6190			**C363_28.7 P90 BXN90S4**	168
51	199	2.5	28.3	7000			**C412_28.3 P90 BXN90S4**	172
53	191	1.0	27.2	3160			**C222_27.2 P90 BXN90S4**	160
53	189	1.6	26.9	5220			**C322_26.9 P90 BXN90S4**	164
55	180	2.4	26.2	5930			**C363_26.2 P90 BXN90S4**	168
57	177	1.7	25.1	5180			**C322_25.1 P90 BXN90S4**	164
57	176	2.8	25.0	6950			**C412_25.0 P90 BXN90S4**	172
59	171	1.2	24.3	3150			**C222_24.3 P90 BXN90S4**	160
62	161	1.8	22.9	5050			**C322_22.9 P90 BXN90S4**	164
63	159	3.2	22.6	6810			**C412_22.6 P90 BXN90S4**	172
65	152	2.8	22.1	5680			**C363_22.1 P90 BXN90S4**	168
67	151	1.3	21.5	3120			**C222_21.5 P90 BXN90S4**	160
71	141	2.1	20.1	4920			**C322_20.1 P90 BXN90S4**	164
71	141	1.3	20.0	3080			**C222_20.0 P90 BXN90S4**	160
75	134	2.8	19.0	5580			**C362_19.0 P90 BXN90S4**	168
79	128	2.2	18.2	4760			**C322_18.2 P90 BXN90S4**	164
79	127	1.4	18.1	3020			**C222_18.1 P90 BXN90S4**	160
83	121	3.1	17.2	5300			**C362_17.2 P90 BXN90S4**	168
90	111	1.6	15.8	2970			**C222_15.8 P90 BXN90S4**	160
92	110	2.5	15.6	4630			**C322_15.6 P90 BXN90S4**	164
98	102	1.6	14.5	2940			**C222_14.5 P90 BXN90S4**	160
102	99	2.5	14.1	4480			**C322_14.1 P90 BXN90S4**	164
115	87	1.8	12.4	2840			**C222_12.4 P90 BXN90S4**	160
116	87	2.8	12.3	4350			**C322_12.3 P90 BXN90S4**	164
128	79	2.9	11.2	4200			**C322_11.2 P90 BXN90S4**	164
129	78	2.0	11.1	2800			**C222_11.1 P90 BXN90S4**	160
142	71	0.9	10.1	1400			**C122_10.1 P90 BXN90S4**	156
148	68	2.1	9.6	2700			**C222_9.6 P90 BXN90S4**	160
154	65	3.4	9.3	4030			**C322_6.3 P90 BXN90S4**	164
162	62	1.0	8.8	1560			**C122_8.8 P90 BXN90S4**	156
165	61	2.3	8.7	2630			**C222_8.7 P90 BXN90S4**	160
188	54	1.0	7.6	1550			**C122_7.6 P90 BXN90S4**	156
202	50	2.6	7.1	2510			**C222_7.1 P90 BXN90S4**	160
229	44	1.2	6.2	1220			**C122_6.2 P90 BXN90S4**	156
235	43	2.5	6.1	2380			**C222_6.1 P90 BXN90S4**	160
255	39	1.3	5.6	1270			**C122_5.6 P90 BXN90S4**	156
256	39	2.6	5.6	2350			**C222_5.6 P90 BXN90S4**	160
294	34	1.4	4.9	1370			**C122_4.9 P90 BXN90S4**	156
300	34	3.0	4.8	2240			**C222_4.8 P90 BXN90S4**	160
332	30	1.5	4.3	1320			**C122_4.3 P90 BXN90S4**	156
336	30	3.1	4.3	2200			**C222_4.3 P90 BXN90S4**	160
386	26	3.5	3.7	2090			**C222_3.7 P90 BXN90S4**	160
392	26	1.6	3.7	1280			**C122_3.7 P90 BXN90S4**	156
446	23	1.8	3.2	1230			**C122_3.2 P90 BXN90S4**	156
517	19	1.9	2.8	1190			**C122_2.8 P90 BXN90S4**	156

1.5 kW

n_2 min-1	M_2 Nm	S	i	R_{n2} N	IE2	IE3		IEC IE2	IEC IE3	
1.0	12390	1.0	908.2	85000	**C1004_908.2 S3 ME3LB6**		192	**C1004_908.2 P100 BE100LA6**		193
1.3	9730	1.2	1081	85000	**C1004_1081 S3 ME3SB4**	**C1004_1081 S3 MX3SB4**	192	**C1004_1081 P90 BE90LA4**	**C1004_1081 P90 BX90LA4**	193
1.4	9035	1.3	1004	85000	**C1004_1004 S3 ME3SB4**	**C1004_1004 S3 MX3SB4**	192	**C1004_1004 P90 BE90LA4**	**C1004_1004 P90 BX90LA4**	193
1.6	8174	1.5	908.2	85000	**C1004_908.2 S3 ME3SB4**	**C1004_908.2 S3 MX3SB4**	192	**C1004_908.2 P90 BE90LA4**	**C1004_908.2 P90 BX90LA4**	193
1.7	7596	0.9	844.0	60000	**C904_844.0 S3 ME3SB4**	**C904_844.0 S3 MX3SB4**	189	**C904_844.0 P90 BE90LA4**	**C904_844.0 P90 BX90LA4**	190
1.7	7590	1.6	843.3	85000	**C1004_843.3 S3 ME3SB4**	**C1004_843.3 S3 MX3SB4**	192	**C1004_843.3 P90 BE90LA4**	**C1004_843.3 P90 BX90LA4**	193
1.8	6981	1.7	775.7	85000	**C1004_775.7 S3 ME3SB4**	**C1004_775.7 S3 MX3SB4**	192	**C1004_775.7 P90 BE90LA4**	**C1004_775.7 P90 BX90LA4**	193
1.8	6963	1.0	773.6	60000	**C904_773.6 S3 ME3SB4**	**C904_773.6 S3 MX3SB4**	189	**C904_773.6 P90 BE90LA4**	**C904_773.6 P90 BX90LA4**	190
2.0	6483	1.9	720.3	85000	**C1004_720.3 S3 ME3SB4**	**C1004_720.3 S3 MX3SB4**	192	**C1004_720.3 P90 BE90LA4**	**C1004_720.3 P90 BX90LA4**	193

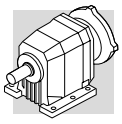

1.5 kW

n_2 min-1	M_2 Nm	S	i	R_{n2} N	IE2	IE3		IEC IE2	IEC IE3	
2.0	6410	1.1	712.2	60000	**C904_712.2 S3 ME3SB4**	**C904_712.2 S3 MX3SB4**	189	**C904_712.2 P90 BE90LA4**	**C904_712.2 P90 BX90LA4**	190
2.2	5875	1.2	652.8	60000	**C904_652.8 S3 ME3SB4**	**C904_652.8 S3 MX3SB4**	189	**C904_652.8 P90 BE90LA4**	**C904_652.8 P90 BX90LA4**	190
2.3	5647	2.1	627.4	85000	**C1004_627.4 S3 ME3SB4**	**C1004_627.4 S3 MX3SB4**	192	**C1004_627.4 P90 BE90LA4**	**C1004_627.4 P90 BX90LA4**	193
2.5	5245	1.4	582.8	60000	**C904_582.8 S3 ME3SB4**	**C904_582.8 S3 MX3SB4**	189	**C904_582.8 P90 BE90LA4**	**C904_582.8 P90 BX90LA4**	190
2.5	5243	2.3	582.6	85000	**C1004_582.6 S3 ME3SB4**	**C1004_582.6 S3 MX3SB4**	192	**C1004_582.6 P90 BE90LA4**	**C1004_582.6 P90 BX90LA4**	193
2.7	4808	1.5	534.2	60000	**C904_534.2 S3 ME3SB4**	**C904_534.2 S3 MX3SB4**	189	**C904_534.2 P90 BE90LA4**	**C904_534.2 P90 BX90LA4**	190
2.8	4524	2.7	502.6	85000	**C1004_502.6 S3 ME3SB4**	**C1004_502.6 S3 MX3SB4**	192	**C1004_502.6 P90 BE90LA4**	**C1004_502.6 P90 BX90LA4**	193
3.1	4201	2.9	466.7	85000	**C1004_466.7 S3 ME3SB4**	**C1004_466.7 S3 MX3SB4**	192	**C1004_466.7 P90 BE90LA4**	**C1004_466.7 P90 BX90LA4**	193
3.1	4114	1.8	457.1	60000	**C904_457.1 S3 ME3SB4**	**C904_457.1 S3 MX3SB4**	189	**C904_457.1 P90 BE90LA4**	**C904_457.1 P90 BX90LA4**	190
3.1	4099	1.0	455.4	35000	**C804_455.4 S3 ME3SB4**	**C804_455.4 S3 MX3SB4**	186	**C804_455.4 P90 BE90LA4**	**C804_455.4 P90 BX90LA4**	187
3.4	3771	1.9	419.0	60000	**C904_419.0 S3 ME3SB4**	**C904_419.0 S3 MX3SB4**	189	**C904_419.0 P90 BE90LA4**	**C904_419.0 P90 BX90LA4**	190
3.4	3757	1.1	417.5	35000	**C804_417.5 S3 ME3SB4**	**C804_417.5 S3 MX3SB4**	186	**C804_417.5 P90 BE90LA4**	**C804_417.5 P90 BX90LA4**	187
3.9	3328	2.2	369.8	60000	**C904_369.8 S3 ME3SB4**	**C904_369.8 S3 MX3SB4**	189	**C904_369.8 P90 BE90LA4**	**C904_369.8 P90 BX90LA4**	190
3.9	3282	1.2	364.7	35000	**C804_364.7 S3 ME3SB4**	**C804_364.7 S3 MX3SB4**	186	**C804_364.7 P90 BE90LA4**	**C804_364.7 P90 BX90LA4**	187
4.2	3051	2.4	339.0	60000	**C904_339.0 S3 ME3SB4**	**C904_339.0 S3 MX3SB4**	189	**C904_339.0 P90 BE90LA4**	**C904_339.0 P90 BX90LA4**	190
4.3	3008	1.3	334.3	35000	**C804_334.3 S3 ME3SB4**	**C804_334.3 S3 MX3SB4**	186	**C804_334.3 P90 BE90LA4**	**C804_334.3 P90 BX90LA4**	187
4.9	2636	2.7	292.9	60000	**C904_292.9 S3 ME3SB4**	**C904_292.9 S3 MX3SB4**	189	**C904_292.9 P90 BE90LA4**	**C904_292.9 P90 BX90LA4**	190
5.0	2571	1.6	285.7	35000	**C804_285.7 S3 ME3SB4**	**C804_285.7 S3 MX3SB4**	186	**C804_285.7 P90 BE90LA4**	**C804_285.7 P90 BX90LA4**	187
5.3	2450	0.9	272.2	25000	**C704_272.2 S3 ME3SB4**	**C704_272.2 S3 MX3SB4**	183	**C704_272.2 P90 BE90LA4**	**C704_272.2 P90 BX90LA4**	184
5.3	2416	3.0	268.5	60000	**C904_268.5 S3 ME3SB4**	**C904_268.5 S3 MX3SB4**	189	**C904_268.5 P90 BE90LA4**	**C904_268.5 P90 BX90LA4**	190
5.5	2357	1.7	261.9	35000	**C804_261.9 S3 ME3SB4**	**C804_261.9 S3 MX3SB4**	186	**C804_261.9 P90 BE90LA4**	**C804_261.9 P90 BX90LA4**	187
5.7	2262	1.0	251.3	25000	**C704_251.3 S3 ME3SB4**	**C704_251.3 S3 MX3SB4**	183	**C704_251.3 P90 BE90LA4**	**C704_251.3 P90 BX90LA4**	184
6.0	2226	1.0	239.3	25000	**C703_239.3 S3 ME3SB4**	**C703_239.3 S3 MX3SB4**	183	**C703_239.3 P90 BE90LA4**	**C703_239.3 P90 BX90LA4**	184
6.5	2054	1.1	220.9	25000	**C703_220.9 S3 ME3SB4**	**C703_220.9 S3 MX3SB4**	183	**C703_220.9 P90 BE90LA4**	**C703_220.9 P90 BX90LA4**	184
6.6	1957	0.8	217.4	16000	**C614_217.4 S3 ME3SB4**	**C614_217.4 S3 MX3SB4**	179	**C614_217.4 P90 BE90LA4**	**C614_217.4 P90 BX90LA4**	180
6.6	2007	2.0	215.8	35000	**C803_215.8 S3 ME3SB4**	**C803_215.8 S3 MX3SB4**	186	**C803_215.8 P90 BE90LA4**	**C803_215.8 P90 BX90LA4**	187
7.2	1840	2.1	197.9	35000	**C803_197.9 S3 ME3SB4**	**C803_197.9 S3 MX3SB4**	186	**C803_197.9 P90 BE90LA4**	**C803_197.9 P90 BX90LA4**	187
7.3	1762	0.9	195.8	16000	**C613_195.8 S3 ME3SB4**	**C613_195.8 S3 MX3SB4**	179	**C613_195.8 P90 BE90LA4**	**C613_195.8 P90 BX90LA4**	180
7.4	1805	1.3	194.1	25000	**C703_194.1 S3 ME3SB4**	**C703_194.1 S3 MX3SB4**	183	**C703_194.1 P90 BE90LA4**	**C703_194.1 P90 BX90LA4**	184
7.8	1715	2.3	184.4	35000	**C803_184.4 S3 ME3SB4**	**C803_184.4 S3 MX3SB4**	186	**C803_184.4 P90 BE90LA4**	**C803_184.4 P90 BX90LA4**	187
8.0	1666	1.4	179.2	25000	**C703_179.2 S3 ME3SB4**	**C703_179.2 S3 MX3SB4**	183	**C703_179.2 P90 BE90LA4**	**C703_179.2 P90 BX90LA4**	184
8.0	1607	1.0	178.6	16000	**C613_178.6 S3 ME3SB4**	**C613_178.6 S3 MX3SB4**	179	**C613_178.6 P90 BE90LA4**	**C613_178.6 P90 BX90LA4**	180
8.5	1572	2.5	169.0	35000	**C803_169.0 S3 ME3SB4**	**C803_169.0 S3 MX3SB4**	186	**C803_169.0 P90 BE90LA4**	**C803_169.0 P90 BX90LA4**	187
8.7	1480	1.1	164.5	16000	**C613_164.5 S3 ME3SB4**	**C613_164.5 S3 MX3SB4**	179	**C613_164.5 P90 BE90LA4**	**C613_164.5 P90 BX90LA4**	180
8.8	1514	1.5	162.8	25000	**C703_162.8 S3 ME3SB4**	**C703_162.8 S3 MX3SB4**	183	**C703_162.8 P90 BE90LA4**	**C703_162.8 P90 BX90LA4**	184
9.5	1398	1.6	150.3	25000	**C703_150.3 S3 ME3SB4**	**C703_150.3 S3 MX3SB4**	183	**C703_150.3 P90 BE90LA4**	**C703_150.3 P90 BX90LA4**	184
9.5	1350	1.2	150.0	16000	**C613_150.0 S3 ME3SB4**	**C613_150.0 S3 MX3SB4**	179	**C613_150.0 P90 BE90LA4**	**C613_150.0 P90 BX90LA4**	180
9.6	1387	2.9	149.1	35000	**C803_149.1 S3 ME3SB4**	**C803_149.1 S3 MX3SB4**	186	**C803_149.1 P90 BE90LA4**	**C803_149.1 P90 BX90LA4**	187
10.2	1264	1.3	140.5	16000	**C613_140.5 S3 ME3SB4**	**C613_140.5 S3 MX3SB4**	179	**C613_140.5 P90 BE90LA4**	**C613_140.5 P90 BX90LA4**	180
10.4	1278	1.8	137.4	25000	**C703_137.4 S3 ME3SB4**	**C703_137.4 S3 MX3SB4**	183	**C703_137.4 P90 BE90LA4**	**C703_137.4 P90 BX90LA4**	184
10.5	1271	3.1	136.7	35000	**C803_136.7 S3 ME3SB4**	**C803_136.7 S3 MX3SB4**	186	**C803_136.7 P90 BE90LA4**	**C803_136.7 P90 BX90LA4**	187
11.2	1153	1.4	128.1	16000	**C613_128.1 S3 ME3SB4**	**C613_128.1 S3 MX3SB4**	179	**C613_128.1 P90 BE90LA4**	**C613_128.1 P90 BX90LA4**	180
11.3	1180	1.9	126.8	25000	**C703_126.8 S3 ME3SB4**	**C703_126.8 S3 MX3SB4**	183	**C703_126.8 P90 BE90LA4**	**C703_126.8 P90 BX90LA4**	184
12.6	1022	1.6	113.6	16000	**C613_113.6 S3 ME3SB4**	**C613_113.6 S3 MX3SB4**	179	**C613_113.6 P90 BE90LA4**	**C613_113.6 P90 BX90LA4**	180
12.6	1057	0.9	113.6	10000	**C513_113.6 S3 ME3SB4**	**C513_113.6 S3 MX3SB4**	175	**C513_113.6 P90 BE90LA4**	**C513_113.6 P90 BX90LA4**	176
12.7	1046	2.2	112.4	25000	**C703_112.4 S3 ME3SB4**	**C703_112.4 S3 MX3SB4**	183	**C703_112.4 P90 BE90LA4**	**C703_112.4 P90 BX90LA4**	184
13.8	965	2.4	103.8	25000	**C703_103.8 S3 ME3SB4**	**C703_103.8 S3 MX3SB4**	183	**C703_103.8 P90 BE90LA4**	**C703_103.8 P90 BX90LA4**	184
13.8	933	1.7	103.6	16000	**C613_103.6 S3 ME3SB4**	**C613_103.6 S3 MX3SB4**	179	**C613_103.6 P90 BE90LA4**	**C613_103.6 P90 BX90LA4**	180
14.0	947	1.1	101.8	10000	**C513_101.8 S3 ME3SB4**	**C513_101.8 S3 MX3SB4**	175	**C513_101.8 P90 BE90LA4**	**C513_101.8 P90 BX90LA4**	176
15.4	865	1.2	93.0	10000	**C513_93.0 S3 ME3SB4**	**C513_93.0 S3 MX3SB4**	175	**C513_93.0 P90 BE90LA4**	**C513_93.0 P90 BX90LA4**	176
15.7	819	2.0	91.0	16000	**C613_91.0 S3 ME3SB4**	**C613_91.0 S3 MX3SB4**	179	**C613_91.0 P90 BE90LA4**	**C613_91.0 P90 BX90LA4**	180
16.2	820	2.8	88.2	25000	**C703_88.2 S3 ME3SB4**	**C703_88.2 S3 MX3SB4**	183	**C703_88.2 P90 BE90LA4**	**C703_88.2 P90 BX90LA4**	184
16.6	821	1.0	57.0	10000	**C512_57.0 S3 ME3LB6**		175	**C512_57.0 P100 BE100LA6**		176
17.2	747	2.1	83.0	16000	**C613_83.0 S3 ME3SB4**	**C613_83.0 S3 MX3SB4**	179	**C613_83.0 P90 BE90LA4**	**C613_83.0 P90 BX90LA4**	180
17.6	757	3.0	81.4	25000	**C703_81.4 S3 ME3SB4**	**C703_81.4 S3 MX3SB4**	183	**C703_81.4 P90 BE90LA4**	**C703_81.4 P90 BX90LA4**	184
17.9	743	1.3	79.9	10000	**C513_79.9 S3 ME3SB4**	**C513_79.9 S3 MX3SB4**	175	**C513_79.9 P90 BE90LA4**	**C513_79.9 P90 BX90LA4**	176
18.4	740	0.9	51.4	10000	**C512_51.4 S3 ME3LB6**		175	**C512_51.4 P100 BE100LA6**		176
19.3	668	2.4	74.2	16000	**C613_74.2 S3 ME3SB4**	**C613_74.2 S3 MX3SB4**	179	**C613_74.2 P90 BE90LA4**	**C613_74.2 P90 BX90LA4**	180
19.6	678	1.5	72.9	10000	**C513_72.9 S3 ME3SB4**	**C513_72.9 S3 MX3SB4**	175	**C513_72.9 P90 BE90LA4**	**C513_72.9 P90 BX90LA4**	176
19.8	689	1.2	47.8	10000	**C512_47.8 S3 ME3LB6**		175	**C512_47.8 P100 BE100LA6**		176
20.0	663	3.5	71.3	25000	**C703_71.3 S3 ME3SB4**	**C703_71.3 S3 MX3SB4**	183	**C703_71.3 P90 BE90LA4**	**C703_71.3 P90 BX90LA4**	184
21.1	609	2.6	67.7	16000	**C613_67.7 S3 ME3SB4**	**C613_67.7 S3 MX3SB4**	179	**C613_67.7 P90 BE90LA4**	**C613_67.7 P90 BX90LA4**	180
21.9	621	1.2	43.1	10000	**C512_43.1 S3 ME3LB6**		175	**C512_43.1 P100 BE100LA6**		176
22.1	601	1.7	64.6	10000	**C513_64.6 S3 ME3SB4**	**C513_64.6 S3 MX3SB4**	175	**C513_64.6 P90 BE90LA4**	**C513_64.6 P90 BX90LA4**	176
22.2	598	1.0	64.3	7000	**C413_64.3 S3 ME3SB4**	**C413_64.3 S3 MX3SB4**	171	**C413_64.3 P90 BE90LA4**	**C413_64.3 P90 BX90LA4**	172

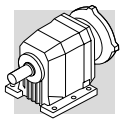

1.5 kW

n_2 min-1	M_2 Nm	S	i	R_{n2} N	IE2	IE3		IE2	IEC IE3	
24.2	549	1.8	59.0	10000	**C513_59.0 S3 ME3SB4**	**C513_59.0 S3 MX3SB4**	175	**C513_59.0 P90 BE90LA4**	**C513_59.0 P90 BX90LA4**	176
24.4	545	1.1	58.7	7000	**C413_58.7 S3 ME3SB4**	**C413_58.7 S3 MX3SB4**	171	**C413_58.7 P90 BE90LA4**	**C413_58.7 P90 BX90LA4**	172
24.4	527	3.0	58.6	16000	**C613_58.6 S3 ME3SB4**	**C613_58.6 S3 MX3SB4**	179	**C613_58.6 P90 BE90LA4**	**C613_58.6 P90 BX90LA4**	180
25.1	542	1.4	57.0	10000	**C512_57.0 S3 ME3SB4**	**C512_57.0 S3 MX3SB4**	175	**C512_57.0 P90 BE90LA4**	**C512_57.0 P90 BX90LA4**	176
26.7	481	3.3	53.5	16000	**C613_53.5 S3 ME3SB4**	**C613_53.5 S3 MX3SB4**	179	**C613_53.5 P90 BE90LA4**	**C613_53.5 P90 BX90LA4**	180
27.8	479	1.3	51.5	7000	**C413_51.5 S3 ME3SB4**	**C413_51.5 S3 MX3SB4**	171	**C413_51.5 P90 BE90LA4**	**C413_51.5 P90 BX90LA4**	172
27.8	488	1.4	51.4	10000	**C512_51.4 S3 ME3SB4**	**C512_51.4 S3 MX3SB4**	175	**C512_51.4 P90 BE90LA4**	**C512_51.4 P90 BX90LA4**	176
27.9	476	2.1	51.2	10000	**C513_51.2 S3 ME3SB4**	**C513_51.2 S3 MX3SB4**	175	**C513_51.2 P90 BE90LA4**	**C513_51.2 P90 BX90LA4**	176
29.7	448	1.0	48.2	6290	**C363_48.2 S3 ME3SB4**	**C363_48.2 S3 MX3SB4**	167	**C363_48.2 P90 BE90LA4**	**C363_48.2 P90 BX90LA4**	168
29.9	454	1.8	47.8	10000	**C512_47.8 S3 ME3SB4**	**C512_47.8 S3 MX3SB4**	175	**C512_47.8 P90 BE90LA4**	**C512_47.8 P90 BX90LA4**	176
30	437	1.4	47.0	7000	**C413_47.0 S3 ME3SB4**	**C413_47.0 S3 MX3SB4**	171	**C413_47.0 P90 BE90LA4**	**C413_47.0 P90 BX90LA4**	172
31	435	2.3	46.7	10000	**C513_46.7 S3 ME3SB4**	**C513_46.7 S3 MX3SB4**	175	**C513_46.7 P90 BE90LA4**	**C513_46.7 P90 BX90LA4**	176
32	425	1.2	44.8	7000	**C412_44.8 S3 ME3SB4**	**C412_44.8 S3 MX3SB4**	171	**C412_44.8 P90 BE90LA4**	**C412_44.8 P90 BX90LA4**	172
33	404	1.1	43.5	6110	**C363_43.5 S3 ME3SB4**	**C363_43.5 S3 MX3SB4**	167	**C363_43.5 P90 BE90LA4**	**C363_43.5 P90 BX90LA4**	168
33	410	1.9	43.1	10000	**C512_43.1 S3 ME3SB4**	**C512_43.1 S3 MX3SB4**	175	**C512_43.1 P90 BE90LA4**	**C512_43.1 P90 BX90LA4**	176
35	376	2.7	40.5	10000	**C513_40.5 S3 ME3SB4**	**C513_40.5 S3 MX3SB4**	175	**C513_40.5 P90 BE90LA4**	**C513_40.5 P90 BX90LA4**	176
35	383	2.1	40.4	10000	**C512_40.4 S3 ME3SB4**	**C512_40.4 S3 MX3SB4**	175	**C512_40.4 P90 BE90LA4**	**C512_40.4 P90 BX90LA4**	176
35	375	1.6	40.3	7000	**C413_40.3 S3 ME3SB4**	**C413_40.3 S3 MX3SB4**	171	**C413_40.3 P90 BE90LA4**	**C413_40.3 P90 BX90LA4**	172
38	354	1.3	38.1	6110	**C363_38.1 S3 ME3SB4**	**C363_38.1 S3 MX3SB4**	167	**C363_38.1 P90 BE90LA4**	**C363_38.1 P90 BX90LA4**	168
39	352	1.4	37.1	7000	**C412_37.1 S3 ME3SB4**	**C412_37.1 S3 MX3SB4**	171	**C412_37.1 P90 BE90LA4**	**C412_37.1 P90 BX90LA4**	172
39	344	2.9	37.0	10000	**C513_37.0 S3 ME3SB4**	**C513_37.0 S3 MX3SB4**	175	**C513_37.0 P90 BE90LA4**	**C513_37.0 P90 BX90LA4**	176
39	346	2.3	36.4	10000	**C512_36.4 S3 ME3SB4**	**C512_36.4 S3 MX3SB4**	175	**C512_36.4 P90 BE90LA4**	**C512_36.4 P90 BX90LA4**	176
40	343	0.9	36.1	5100	**C322_36.1 S3 ME3SB4**	**C322_36.1 S3 MX3SB4**	163	**C322_36.1 P90 BE90LA4**	**C322_36.1 P90 BX90LA4**	164
41	322	1.4	34.6	5950	**C363_34.6 S3 ME3SB4**	**C363_34.6 S3 MX3SB4**	167	**C363_34.6 P90 BE90LA4**	**C363_34.6 P90 BX90LA4**	168
43	317	1.6	33.4	7000	**C412_33.4 S3 ME3SB4**	**C412_33.4 S3 MX3SB4**	171	**C412_33.4 P90 BE90LA4**	**C412_33.4 P90 BX90LA4**	172
43	314	1.0	33.1	5050	**C322_33.1 S3 ME3SB4**	**C322_33.1 S3 MX3SB4**	163	**C322_33.1 P90 BE90LA4**	**C322_33.1 P90 BX90LA4**	164
43	314	2.5	33.0	10000	**C512_33.0 S3 ME3SB4**	**C512_33.0 S3 MX3SB4**	175	**C512_33.0 P90 BE90LA4**	**C512_33.0 P90 BX90LA4**	176
45	299	1.7	31.4	6990	**C412_31.4 S3 ME3SB4**	**C412_31.4 S3 MX3SB4**	171	**C412_31.4 P90 BE90LA4**	**C412_31.4 P90 BX90LA4**	172
48	283	2.8	29.8	10000	**C512_29.8 S3 ME3SB4**	**C512_29.8 S3 MX3SB4**	175	**C512_29.8 P90 BE90LA4**	**C512_29.8 P90 BX90LA4**	176
48	283	1.1	29.8	4970	**C322_29.8 S3 ME3SB4**	**C322_29.8 S3 MX3SB4**	163	**C322_29.8 P90 BE90LA4**	**C322_29.8 P90 BX90LA4**	164
50	267	1.7	28.7	5830	**C363_28.7 S3 ME3SB4**	**C363_28.7 S3 MX3SB4**	167	**C363_28.7 P90 BE90LA4**	**C363_28.7 P90 BX90LA4**	168
51	269	1.9	28.3	6830	**C412_28.3 S3 ME3SB4**	**C412_28.3 S3 MX3SB4**	171	**C412_28.3 P90 BE90LA4**	**C412_28.3 P90 BX90LA4**	172
53	256	1.2	26.9	4890	**C322_26.9 S3 ME3SB4**	**C322_26.9 S3 MX3SB4**	163	**C322_26.9 P90 BE90LA4**	**C322_26.9 P90 BX90LA4**	164
55	244	1.8	26.2	5710	**C363_26.2 S3 ME3SB4**	**C363_26.2 S3 MX3SB4**	167	**C363_26.2 P90 BE90LA4**	**C363_26.2 P90 BX90LA4**	168
55	246	3.2	25.9	10000	**C512_25.9 S3 ME3SB4**	**C512_25.9 S3 MX3SB4**	175	**C512_25.9 P90 BE90LA4**	**C512_25.9 P90 BX90LA4**	176
57	239	1.3	25.1	4840	**C322_25.1 S3 ME3SB4**	**C322_25.1 S3 MX3SB4**	163	**C322_25.1 P90 BE90LA4**	**C322_25.1 P90 BX90LA4**	164
57	238	2.1	25.0	6680	**C412_25.0 S3 ME3SB4**	**C412_25.0 S3 MX3SB4**	171	**C412_25.0 P90 BE90LA4**	**C412_25.0 P90 BX90LA4**	172
62	218	1.4	22.9	4750	**C322_22.9 S3 ME3SB4**	**C322_22.9 S3 MX3SB4**	163	**C322_22.9 P90 BE90LA4**	**C322_22.9 P90 BX90LA4**	164
63	214	2.3	22.6	6510	**C412_22.6 S3 ME3SB4**	**C412_22.6 S3 MX3SB4**	171	**C412_22.6 P90 BE90LA4**	**C412_22.6 P90 BX90LA4**	172
65	206	2.1	22.1	5530	**C363_22.1 S3 ME3SB4**	**C363_22.1 S3 MX3SB4**	167	**C363_22.1 P90 BE90LA4**	**C363_22.1 P90 BX90LA4**	168
67	204	1.0	21.5	2600	**C222_21.5 S3 ME3SB4**	**C222_21.5 S3 MX3SB4**	159	**C222_21.5 P90 BE90LA4**	**C222_21.5 P90 BX90LA4**	160
71	191	1.5	20.1	4650	**C322_20.1 S3 ME3SB4**	**C322_20.1 S3 MX3SB4**	163	**C322_20.1 P90 BE90LA4**	**C322_20.1 P90 BX90LA4**	164
71	190	1.0	20.0	2740	**C222_20.0 S3 ME3SB4**	**C222_20.0 S3 MX3SB4**	159	**C222_20.0 P90 BE90LA4**	**C222_20.0 P90 BX90LA4**	160
72	188	2.6	19.8	6330	**C412_19.8 S3 ME3SB4**	**C412_19.8 S3 MX3SB4**	171	**C412_19.8 P90 BE90LA4**	**C412_19.8 P90 BX90LA4**	172
75	181	2.1	19.0	5330	**C362_19.0 S3 ME3SB4**	**C362_19.0 S3 MX3SB4**	167	**C362_19.0 P90 BE90LA4**	**C362_19.0 P90 BX90LA4**	168
79	173	1.6	18.2	4520	**C322_18.2 S3 ME3SB4**	**C322_18.2 S3 MX3SB4**	163	**C322_18.2 P90 BE90LA4**	**C322_18.2 P90 BX90LA4**	164
79	172	1.1	18.1	2700	**C222_18.1 S3 ME3SB4**	**C222_18.1 S3 MX3SB4**	159	**C222_18.1 P90 BE90LA4**	**C222_18.1 P90 BX90LA4**	160
80	169	2.8	17.8	6160	**C412_17.8 S3 ME3SB4**	**C412_17.8 S3 MX3SB4**	171	**C412_17.8 P90 BE90LA4**	**C412_17.8 P90 BX90LA4**	172
83	163	2.3	17.2	5140	**C362_17.2 S3 ME3SB4**	**C362_17.2 S3 MX3SB4**	167	**C362_17.2 P90 BE90LA4**	**C362_17.2 P90 BX90LA4**	168
90	150	1.2	15.8	2700	**C222_15.8 S3 ME3SB4**	**C222_15.8 S3 MX3SB4**	159	**C222_15.8 P90 BE90LA4**	**C222_15.8 P90 BX90LA4**	160
90	150	3.0	15.8	6000	**C412_15.8 S3 ME3SB4**	**C412_15.8 S3 MX3SB4**	171	**C412_15.8 P90 BE90LA4**	**C412_15.8 P90 BX90LA4**	172
92	148	1.8	15.6	4410	**C322_15.6 S3 ME3SB4**	**C322_15.6 S3 MX3SB4**	163	**C322_15.6 P90 BE90LA4**	**C322_15.6 P90 BX90LA4**	164
97	140	2.7	14.8	5030	**C362_14.8 S3 ME3SB4**	**C362_14.8 S3 MX3SB4**	167	**C362_14.8 P90 BE90LA4**	**C362_14.8 P90 BX90LA4**	168
98	138	1.2	14.5	2700	**C222_14.5 S3 ME3SB4**	**C222_14.5 S3 MX3SB4**	159	**C222_14.5 P90 BE90LA4**	**C222_14.5 P90 BX90LA4**	160
100	135	3.3	14.2	5830	**C412_14.2 S3 ME3SB4**	**C412_14.2 S3 MX3SB4**	171	**C412_14.2 P90 BE90LA4**	**C412_14.2 P90 BX90LA4**	172
102	134	1.9	14.1	4280	**C322_14.1 S3 ME3SB4**	**C322_14.1 S3 MX3SB4**	163	**C322_14.1 P90 BE90LA4**	**C322_14.1 P90 BX90LA4**	164
107	127	3.0	13.3	4890	**C362_13.3 S3 ME3SB4**	**C362_13.3 S3 MX3SB4**	167	**C362_13.3 P90 BE90LA4**	**C362_13.3 P90 BX90LA4**	168
115	118	1.4	12.4	2630	**C222_12.4 S3 ME3SB4**	**C222_12.4 S3 MX3SB4**	159	**C222_12.4 P90 BE90LA4**	**C222_12.4 P90 BX90LA4**	160
116	117	2.1	12.3	4180	**C322_12.3 S3 ME3SB4**	**C322_12.3 S3 MX3SB4**	163	**C322_12.3 P90 BE90LA4**	**C322_12.3 P90 BX90LA4**	164
123	111	3.4	11.7	4740	**C362_11.7 S3 ME3SB4**	**C362_11.7 S3 MX3SB4**	167	**C362_11.7 P90 BE90LA4**	**C362_11.7 P90 BX90LA4**	168
128	106	2.2	11.2	4050	**C322_11.2 S3 ME3SB4**	**C322_11.2 S3 MX3SB4**	163	**C322_11.2 P90 BE90LA4**	**C322_11.2 P90 BX90LA4**	164
129	105	1.5	11.1	2600	**C222_11.1 S3 ME3SB4**	**C222_11.1 S3 MX3SB4**	159	**C222_11.1 P90 BE90LA4**	**C222_11.1 P90 BX90LA4**	160
148	92	1.6	9.6	2530	**C222_9.6 S3 ME3SB4**	**C222_9.6 S3 MX3SB4**	159	**C222_9.6 P90 BE90LA4**	**C222_9.6 P90 BX90LA4**	160
154	88	2.5	9.3	3900	**C322_9.3 S3 ME3SB4**	**C322_9.3 S3 MX3SB4**	163	**C322_9.3 P90 BE90LA4**	**C322_9.3 P90 BX90LA4**	164
165	82	1.7	8.7	2470	**C222_8.7 S3 ME3SB4**	**C222_8.7 S3 MX3SB4**	159	**C222_8.7 P90 BE90LA4**	**C222_8.7 P90 BX90LA4**	160

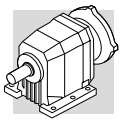

1.5 kW

n_2 min^{-1}	M_2 Nm	S	i	R_{n2} N	IE2	IE3		IEC IE2	IEC IE3	
169	81	2.6	8.5	3790	**C322_8.5 S3 ME3SB4**	**C322_8.5 S3 MX3SB4**	163	**C322_8.5 P90 BE90LA4**	**C322_8.5 P90 BX90LA4**	164
180	75	2.3	15.8	2440	**C222_15.8 S3 ME3SA2**		159	**C222_15.8 P90 BE90SA2**		160
191	71	2.2	5.0	3610	**C322_5.0 S3 ME3LB6**		163	**C322_5.0 P100 BE100LA6**		164
200	68	2.9	7.2	3640	**C322_7.2 S3 ME3SB4**	**C322_7.2 S3 MX3SB4**	163	**C322_7.2 P90 BE90LA4**	**C322_7.2 P90 BX90LA4**	164
202	67	1.9	7.1	2380	**C222_7.1 S3 ME3SB4**	**C222_7.1 S3 MX3SB4**	159	**C222_7.1 P90 BE90LA4**	**C222_7.1 P90 BX90LA4**	160
204	67	3.0	4.6	4050	**C362_4.6 S3 ME3LB6**		167	**C362_4.6 P100 BE100LA6**		168
228	60	2.6	6.3	3450	**C322_6.3 S3 ME3SB4**	**C322_6.3 S3 MX3SB4**	163	**C322_6.3 P90 BE90LA4**	**C322_6.3 P90 BX90LA4**	164
229	59	0.9	6.2	600	**C122_6.2 S3 ME3SB4**	**C122_6.2 S3 MX3SB4**	155	**C122_6.2 P90 BE90LA4**	**C122_6.2 P90 BX90LA4**	156
235	58	1.8	6.1	2250	**C222_6.1 S3 ME3SB4**	**C222_6.1 S3 MX3SB4**	159	**C222_6.1 P90 BE90LA4**	**C222_6.1 P90 BX90LA4**	160
240	57	1.2	11.9	1250	**C122_11.9 S3 ME3SA2**		155	**C122_11.9 P90 BE90SA2**		156
253	54	2.9	5.7	3320	**C322_5.7 S3 ME3SB4**	**C322_5.7 S3 MX3SB4**	163	**C322_5.7 P90 BE90LA4**	**C322_5.7 P90 BX90LA4**	164
255	53	1.7	3.7	2210	**C222_3.7 S3 ME3LB6**		159	**C222_3.7 P100 BE100LA6**		160
255	53	1.0	5.6	720	**C122_5.6 S3 ME3SB4**	**C122_5.6 S3 MX3SB4**	155	**C122_5.6 P90 BE90LA4**	**C122_5.6 P90 BX90LA4**	156
256	53	1.9	5.6	2200	**C222_5.6 S3 ME3SB4**	**C222_5.6 S3 MX3SB4**	159	**C222_5.6 P90 BE90LA4**	**C222_5.6 P90 BX90LA4**	160
284	48	1.3	10.1	1340	**C122_10.1 S3 ME3SA2**		155	**C122_10.1 P90 BE90SA2**		156
289	47	3.3	5.0	3240	**C322_5.0 S3 ME3SB4**	**C322_5.0 S3 MX3SB4**	163	**C322_5.0 P90 BE90LA4**	**C322_5.0 P90 BX90LA4**	164
294	46	1.0	4.9	840	**C122_4.9 S3 ME3SB4**	**C122_4.9 S3 MX3SB4**	155	**C122_4.9 P90 BE90LA4**	**C122_4.9 P90 BX90LA4**	156
300	45	2.2	4.8	2140	**C222_4.8 S3 ME3SB4**	**C222_4.8 S3 MX3SB4**	159	**C222_4.8 P90 BE90LA4**	**C222_4.8 P90 BX90LA4**	160
323	42	1.4	8.8	1300	**C122_8.8 S3 ME3SA2**		155	**C122_8.8 P90 BE90SA2**		156
330	41	3.3	8.7	2130	**C222_8.7 S3 ME3SA2**		159	**C222_8.7 P90 BE90SA2**		160
332	41	1.1	4.3	930	**C122_4.3 S3 ME3SB4**	**C122_4.3 S3 MX3SB4**	155	**C122_4.3 P90 BE90LA4**	**C122_4.3 P90 BX90LA4**	156
336	40	2.3	4.3	2100	**C222_4.3 S3 ME3SB4**	**C222_4.3 S3 MX3SB4**	159	**C222_4.3 P90 BE90LA4**	**C222_4.3 P90 BX90LA4**	160
341	40	0.9	2.8	1000	**C122_2.8 S3 ME3LB6**		155	**C122_2.8 P100 BE100LA6**		156
347	39	2.0	2.7	2060	**C222_2.7 S3 ME3LB6**		159	**C222_2.7 P100 BE100LA6**		160
375	36	1.5	7.6	1270	**C122_7.6 S3 ME3SA2**		155	**C122_7.6 P90 BE90SA2**		156
386	35	2.6	3.7	2020	**C222_3.7 S3 ME3SB4**	**C222_3.7 S3 MX3SB4**	159	**C222_3.7 P90 BE90LA4**	**C222_3.7 P90 BX90LA4**	160
392	35	1.2	3.7	1100	**C122_3.7 S3 ME3SB4**	**C122_3.7 S3 MX3SB4**	155	**C122_3.7 P90 BE90LA4**	**C122_3.7 P90 BX90LA4**	156
403	34	3.9	7.1	2030	**C222_7.1 S3 ME3SA2**		159	**C222_7.1 P90 BE90SA2**		160
430	32	2.7	3.3	2000	**C222_3.3 S3 ME3SB4**	**C222_3.3 S3 MX3SB4**	159	**C222_3.3 P90 BE90LA4**	**C222_3.3 P90 BX90LA4**	160
446	30	1.3	3.2	1120	**C122_3.2 S3 ME3SB4**	**C122_3.2 S3 MX3SB4**	155	**C122_3.2 P90 BE90LA4**	**C122_3.2 P90 BX90LA4**	156
458	30	1.8	6.2	1180	**C122_6.2 S3 ME3SA2**		155	**C122_6.2 P90 BE90SA2**		156
469	29	3.6	6.1	1920	**C222_6.1 S3 ME3SA2**		159	**C222_6.1 P90 BE90SA2**		160
510	27	1.9	5.6	1140	**C122_5.6 S3 ME3SA2**		155	**C122_5.6 P90 BE90SA2**		156
511	27	3.8	5.6	1860	**C222_5.6 S3 ME3SA2**		159	**C222_5.6 P90 BE90SA2**		160
517	26	1.4	2.8	1140	**C122_2.8 S3 ME3SB4**	**C122_2.8 S3 MX3SB4**	155	**C122_2.8 P90 BE90LA4**	**C122_2.8 P90 BX90LA4**	156
525	26	3.1	2.7	1870	**C222_2.7 S3 ME3SB4**	**C222_2.7 S3 MX3SB4**	159	**C222_2.7 P90 BE90LA4**	**C222_2.7 P90 BX90LA4**	160
586	23	2.1	4.9	1110	**C122_4.9 S3 ME3SA2**		155	**C122_4.9 P90 BE90SA2**		156
599	23	4.4	4.8	1810	**C222_4.8 S3 ME3SA2**		159	**C222_4.8 P90 BE90SA2**		160
662	21	2.2	4.3	1070	**C122_4.3 S3 ME3SA2**		155	**C122_4.3 P90 BE90SA2**		156
782	17	2.4	3.7	1030	**C122_3.7 S3 ME3SA2**		155	**C122_3.7 P90 BE90SA2**		156
890	15	2.6	3.2	990	**C122_3.2 S3 ME3SA2**		155	**C122_3.2 P90 BE90SA2**		156
1032	13	2.8	2.8	960	**C122_2.8 S3 ME3SA2**		155	**C122_2.8 P90 BE90SA2**		156

1.5 kW

n_2 min^{-1}	M_2 Nm	S	i	R_{n2} N	IE3		IEC IE3	
1.3	9730	1.2	1081	85000			**C1004_1081 P90 BXN90L4**	193
1.4	9035	1.3	1004	85000			**C1004_1004 P90 BXN90L4**	193
1.6	8174	1.5	908.2	85000			**C1004_908.2 P90 BXN90L4**	193
1.7	7596	0.9	844.0	60000			**C904_844.0 P90 BXN90L4**	190
1.7	7590	1.6	843.3	85000			**C1004_843.3 P90 BXN90L4**	193

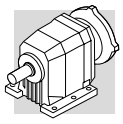

1.5 kW

n_2 min-1	M_2 Nm	S	i	R_{n2} N	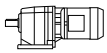 IE3		 IEC IE3	
1.8	6981	1.7	775.7	85000			**C1004_775.7 P90 BXN90L4**	193
1.8	6963	1.0	773.6	60000			**C904_773.6 P90 BXN90L4**	190
2.0	6483	1.9	720.3	85000			**C1004_720.3 P90 BXN90L4**	193
2.0	6410	1.1	712.2	60000			**C904_712.2 P90 BXN90L4**	190
2.2	5875	1.2	652.8	60000			**C904_652.8 P90 BXN90L4**	190
2.3	5647	2.1	627.4	85000			**C1004_627.4 P90 BXN90L4**	193
2.5	5245	1.4	582.8	60000			**C904_582.8 P90 BXN90L4**	190
2.5	5243	2.3	582.6	85000			**C1004_582.6 P90 BXN90L4**	193
2.7	4808	1.5	534.2	60000			**C904_534.2 P90 BXN90L4**	190
2.8	4524	2.7	502.6	85000			**C1004_502.6 P90 BXN90L4**	193
3.1	4201	2.9	466.7	85000			**C1004_466.7 P90 BXN90L4**	193
3.1	4114	1.8	457.1	60000			**C904_457.1 P90 BXN90L4**	190
3.1	4099	1.0	455.4	35000			**C804_455.4 P90 BXN90L4**	187
3.4	3771	1.9	419.0	60000			**C904_419.0 P90 BXN90L4**	190
3.4	3757	1.1	417.5	35000			**C804_417.5 P90 BXN90L4**	187
3.9	3328	2.2	369.8	60000			**C904_369.8 P90 BXN90L4**	190
3.9	3282	1.2	364.7	35000			**C804_364.7 P90 BXN90L4**	187
4.2	3051	2.4	339.0	60000			**C904_339.0 P90 BXN90L4**	190
4.3	3008	1.3	334.3	35000			**C804_334.3 P90 BXN90L4**	187
4.9	2636	2.7	292.9	60000			**C904_292.9 P90 BXN90L4**	190
5.0	2571	1.6	285.7	35000			**C804_285.7 P90 BXN90L4**	187
5.3	2450	0.9	272.2	25000			**C704_272.2 P90 BXN90L4**	184
5.3	2416	3.0	268.5	60000			**C904_268.5 P90 BXN90L4**	190
5.5	2357	1.7	261.9	35000			**C804_261.9 P90 BXN90L4**	187
5.7	2262	1.0	251.3	25000			**C704_251.3 P90 BXN90L4**	184
6.0	2226	1.0	239.3	25000			**C703_239.3 P90 BXN90L4**	184
6.5	2054	1.1	220.9	25000			**C703_220.9 P90 BXN90L4**	184
6.6	1957	0.8	217.4	16000			**C614_217.4 P90 BXN90L4**	180
6.6	2007	2.0	215.8	35000			**C803_215.8 P90 BXN90L4**	187
7.2	1840	2.1	197.9	35000			**C803_197.9 P90 BXN90L4**	187
7.3	1762	0.9	195.8	16000			**C613_195.8 P90 BXN90L4**	180
7.4	1805	1.3	194.1	25000			**C703_194.1 P90 BXN90L4**	184
7.8	1715	2.3	184.4	35000			**C803_184.4 P90 BXN90L4**	187
8.0	1666	1.4	179.2	25000			**C703_179.2 P90 BXN90L4**	184
8.0	1607	1.0	178.6	16000			**C613_178.6 P90 BXN90L4**	180
8.5	1572	2.5	169.0	35000			**C803_169.0 P90 BXN90L4**	187
8.7	1480	1.1	164.5	16000			**C613_164.5 P90 BXN90L4**	180
8.8	1514	1.5	162.8	25000			**C703_162.8 P90 BXN90L4**	184
9.5	1398	1.6	150.3	25000			**C703_150.3 P90 BXN90L4**	184
9.5	1350	1.2	150.0	16000			**C613_150.0 P90 BXN90L4**	180
9.6	1387	2.9	149.1	35000			**C803_149.1 P90 BXN90L4**	187
10.2	1264	1.3	140.5	16000			**C613_140.5 P90 BXN90L4**	180
10.4	1278	1.8	137.4	25000			**C703_137.4 P90 BXN90L4**	184
10.5	1271	3.1	136.7	35000			**C803_136.7 P90 BXN90L4**	187
11.2	1153	1.4	128.1	16000			**C613_128.1 P90 BXN90L4**	180
11.3	1180	1.9	126.8	25000			**C703_126.8 P90 BXN90L4**	184
12.6	1022	1.6	113.6	16000			**C613_113.6 P90 BXN90L4**	180
12.6	1057	0.9	113.6	10000			**C513_113.6 P90 BXN90L4**	176
12.7	1046	2.2	112.4	25000			**C703_112.4 P90 BXN90L4**	184
13.8	965	2.4	103.8	25000			**C703_103.8 P90 BXN90L4**	184
13.8	933	1.7	103.6	16000			**C613_103.6 P90 BXN90L4**	180
14.0	947	1.1	101.8	10000			**C513_101.8 P90 BXN90L4**	176
15.4	865	1.2	93.0	10000			**C513_93.0 P90 BXN90L4**	176
15.7	819	2.0	91.0	16000			**C613_91.0 P90 BXN90L4**	180
16.2	820	2.8	88.2	25000			**C703_88.2 P90 BXN90L4**	184
17.2	747	2.1	83.0	16000			**C613_83.0 P90 BXN90L4**	180
17.6	757	3.0	81.4	25000			**C703_81.4 P90 BXN90L4**	184

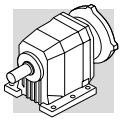

1.5 kW

n_2 min^{-1}	M_2 Nm	S	i	R_{n2} N	IE3		IEC IE3	
17.9	743	1.3	79.9	10000			**C513_79.9 P90 BXN90L4**	176
19.3	668	2.4	74.2	16000			**C613_74.2 P90 BXN90L4**	180
19.6	678	1.5	72.9	10000			**C513_72.9 P90 BXN90L4**	176
20.0	663	3.5	71.3	25000			**C703_71.3 P90 BXN90L4**	184
21.1	609	2.6	67.7	16000			**C613_67.7 P90 BXN90L4**	180
22.1	601	1.7	64.6	10000			**C513_64.6 P90 BXN90L4**	176
22.2	598	1.0	64.3	7000			**C413_64.3 P90 BXN90L4**	172
24.2	549	1.8	59.0	10000			**C513_59.0 P90 BXN90L4**	176
24.4	545	1.1	58.7	7000			**C413_58.7 P90 BXN90L4**	172
24.4	527	3.0	58.6	16000			**C613_58.6 P90 BXN90L4**	180
25.1	542	1.4	57.0	10000			**C512_57.0 P90 BXN90L4**	176
26.7	481	3.3	53.5	16000			**C613_53.5 P90 BXN90L4**	180
27.8	479	1.3	51.5	7000			**C413_51.5 P90 BXN90L4**	172
27.8	488	1.4	51.4	10000			**C512_51.4 P90 BXN90L4**	176
27.9	476	2.1	51.2	10000			**C513_51.2 P90 BXN90L4**	176
29.7	448	1.0	48.2	6290			**C363_48.2 P90 BXN90L4**	168
29.9	454	1.8	47.8	10000			**C512_47.8 P90 BXN90L4**	176
30	437	1.4	47.0	7000			**C413_47.0 P90 BXN90L4**	172
31	435	2.3	46.7	10000			**C513_46.7 P90 BXN90L4**	176
32	425	1.2	44.8	7000			**C412_44.8 P90 BXN90L4**	172
33	404	1.1	43.5	6110			**C363_43.5 P90 BXN90L4**	168
33	410	1.9	43.1	10000			**C512_43.1 P90 BXN90L4**	176
35	376	2.7	40.5	10000			**C513_40.5 P90 BXN90L4**	176
35	383	2.1	40.4	10000			**C512_40.4 P90 BXN90L4**	176
35	375	1.6	40.3	7000			**C413_40.3 P90 BXN90L4**	172
38	354	1.3	38.1	6110			**C363_38.1 P90 BXN90L4**	168
39	352	1.4	37.1	7000			**C412_37.1 P90 BXN90L4**	172
39	344	2.9	37.0	10000			**C513_37.0 P90 BXN90L4**	176
39	346	2.3	36.4	10000			**C512_36.4 P90 BXN90L4**	176
40	343	0.9	36.1	5100			**C322_36.1 P90 BXN90L4**	164
41	322	1.4	34.6	5950			**C363_34.6 P90 BXN90L4**	168
43	317	1.6	33.4	7000			**C412_33.4 P90 BXN90L4**	172
43	314	1.0	33.1	5050			**C322_33.1 P90 BXN90L4**	164
43	314	2.5	33.0	10000			**C512_33.0 P90 BXN90L4**	176
45	299	1.7	31.4	6990			**C412_31.4 P90 BXN90L4**	172
48	283	2.8	29.8	10000			**C512_29.8 P90 BXN90L4**	176
48	283	1.1	29.8	4970			**C322_29.8 P90 BXN90L4**	164
50	267	1.7	28.7	5830			**C363_28.7 P90 BXN90L4**	168
51	269	1.9	28.3	6830			**C412_28.3 P90 BXN90L4**	172
53	256	1.2	26.9	4890			**C322_26.9 P90 BXN90L4**	164
55	244	1.8	26.2	5710			**C363_26.2 P90 BXN90L4**	168
55	246	3.2	25.9	10000			**C512_25.9 P90 BXN90L4**	176
57	239	1.3	25.1	4840			**C322_25.1 P90 BXN90L4**	164
57	238	2.1	25.0	6680			**C412_25.0 P90 BXN90L4**	172
62	218	1.4	22.9	4750			**C322_22.9 P90 BXN90L4**	164
63	214	2.3	22.6	6510			**C412_22.6 P90 BXN90L4**	172
65	206	2.1	22.1	5530			**C363_22.1 P90 BXN90L4**	168
67	204	1.0	21.5	2600			**C222_21.5 P90 BXN90L4**	160
71	191	1.5	20.1	4650			**C322_20.1 P90 BXN90L4**	164
71	190	1.0	20.0	2740			**C222_20.0 P90 BXN90L4**	160
72	188	2.6	19.8	6330			**C412_19.8 P90 BXN90L4**	172
75	181	2.1	19.0	5330			**C362_19.0 P90 BXN90L4**	168
79	173	1.6	18.2	4520			**C322_18.2 P90 BXN90L4**	164
79	172	1.1	18.1	2700			**C222_18.1 P90 BXN90L4**	160
80	169	2.8	17.8	6160			**C412_17.8 P90 BXN90L4**	172
83	163	2.3	17.2	5140			**C362_17.2 P90 BXN90L4**	168
90	150	1.2	15.8	2700			**C222_15.8 P90 BXN90L4**	160

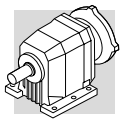

1.5 kW

n_2 min-1	M_2 Nm	S	i	R_{n2} N	IE3		IEC IE3	
90	150	3.0	15.8	6000			**C412_15.8 P90 BXN90L4**	172
92	148	1.8	15.6	4410			**C322_15.6 P90 BXN90L4**	164
97	140	2.7	14.8	5030			**C362_14.8 P90 BXN90L4**	168
98	138	1.2	14.5	2700			**C222_14.5 P90 BXN90L4**	160
100	135	3.3	14.2	5830			**C412_14.2 P90 BXN90L4**	172
102	134	1.9	14.1	4280			**C322_14.1 P90 BXN90L4**	164
107	127	3.0	13.3	4890			**C362_13.3 P90 BXN90L4**	168
115	118	1.4	12.4	2630			**C222_12.4 P90 BXN90L4**	160
116	117	2.1	12.3	4180			**C322_12.3 P90 BXN90L4**	164
123	111	3.4	11.7	4740			**C362_11.7 P90 BXN90L4**	168
128	106	2.2	11.2	4050			**C322_11.2 P90 BXN90L4**	164
129	105	1.5	11.1	2600			**C222_11.1 P90 BXN90L4**	160
148	92	1.6	9.6	2530			**C222_9.6 P90 BXN90L4**	160
154	88	2.5	9.3	3900			**C322_9.3 P90 BXN90L4**	164
165	82	1.7	8.7	2470			**C222_8.7 P90 BXN90L4**	160
169	81	2.6	8.5	3790			**C322_8.5 P90 BXN90L4**	164
200	68	2.9	7.2	3640			**C322_7.2 P90 BXN90L4**	164
202	67	1.9	7.1	2380			**C222_7.1 P90 BXN90L4**	160
228	60	2.6	6.3	3450			**C322_6.3 P90 BXN90L4**	164
229	59	0.9	6.2	600			**C122_6.2 P90 BXN90L4**	156
235	58	1.8	6.1	2250			**C222_6.1 P90 BXN90L4**	160
253	54	2.9	5.7	3320			**C322_5.7 P90 BXN90L4**	164
255	53	1.0	5.6	720			**C122_5.6 P90 BXN90L4**	156
256	53	1.9	5.6	2200			**C222_5.6 P90 BXN90L4**	160
289	47	3.3	5.0	3240			**C322_5.0 P90 BXN90L4**	164
294	46	1.0	4.9	840			**C122_4.9 P90 BXN90L4**	156
300	45	2.2	4.8	2140			**C222_4.8 P90 BXN90L4**	160
332	41	1.1	4.3	930			**C122_4.3 P90 BXN90L4**	156
336	40	2.3	4.3	2100			**C222_4.3 P90 BXN90L4**	160
386	35	2.6	3.7	2020			**C222_3.7 P90 BXN90L4**	160
392	35	1.2	3.7	1100			**C122_3.7 P90 BXN90L4**	156
430	32	2.7	3.3	2000			**C222_3.3 P90 BXN90L4**	160
446	30	1.3	3.2	1120			**C122_3.2 P90 BXN90L4**	156
517	26	1.4	2.8	1140			**C122_2.8 P90 BXN90L4**	156
525	26	3.1	2.7	1870			**C222_2.7 P90 BXN90L4**	160

2.2 kW

n_2 min-1	M_2 Nm	S	i	R_{n2} N	IE2	IE3		IEC IE2	IEC IE3	
1.4	13281	0.9	1004	85000	**C1004_1004 S3 ME3LA4**	**C1004_1004 S3 MX3LA4**	192	**C1004_1004 P100 BE100LA4**	**C1004_1004 P100 BX100LA4**	193
1.6	12016	1.0	908.2	85000	**C1004_908.2 S3 ME3LA4**	**C1004_908.2 S3 MX3LA4**	192	**C1004_908.2 P100 BE100LA4**	**C1004_908.2 P100 BX100LA4**	193
1.7	11157	1.1	843.3	85000	**C1004_843.3 S3 ME3LA4**	**C1004_843.3 S3 MX3LA4**	192	**C1004_843.3 P100 BE100LA4**	**C1004_843.3 P100 BX100LA4**	193
1.8	10263	1.2	775.7	85000	**C1004_775.7 S3 ME3LA4**	**C1004_775.7 S3 MX3LA4**	192	**C1004_775.7 P100 BE100LA4**	**C1004_775.7 P100 BX100LA4**	193
2.0	9530	1.3	720.3	85000	**C1004_720.3 S3 ME3LA4**	**C1004_720.3 S3 MX3LA4**	192	**C1004_720.3 P100 BE100LA4**	**C1004_720.3 P100 BX100LA4**	193
2.3	8301	1.4	627.4	85000	**C1004_627.4 S3 ME3LA4**	**C1004_627.4 S3 MX3LA4**	192	**C1004_627.4 P100 BE100LA4**	**C1004_627.4 P100 BX100LA4**	193
2.5	7710	0.9	582.8	60000	**C904_582.8 S3 ME3LA4**	**C904_582.8 S3 MX3LA4**	189	**C904_582.8 P100 BE100LA4**	**C904_582.8 P100 BX100LA4**	190
2.5	7708	1.6	582.6	85000	**C1004_582.6 S3 ME3LA4**	**C1004_582.6 S3 MX3LA4**	192	**C1004_582.6 P100 BE100LA4**	**C1004_582.6 P100 BX100LA4**	193
2.7	7068	1.0	534.2	60000	**C904_534.2 S3 ME3LA4**	**C904_534.2 S3 MX3LA4**	189	**C904_534.2 P100 BE100LA4**	**C904_534.2 P100 BX100LA4**	190
2.8	6650	1.8	502.6	85000	**C1004_502.6 S3 ME3LA4**	**C1004_502.6 S3 MX3LA4**	192	**C1004_502.6 P100 BE100LA4**	**C1004_502.6 P100 BX100LA4**	193
3.1	6175	1.9	466.7	85000	**C1004_466.7 S3 ME3LA4**	**C1004_466.7 S3 MX3LA4**	192	**C1004_466.7 P100 BE100LA4**	**C1004_466.7 P100 BX100LA4**	193
3.1	6048	1.2	457.1	60000	**C904_457.1 S3 ME3LA4**	**C904_457.1 S3 MX3LA4**	189	**C904_457.1 P100 BE100LA4**	**C904_457.1 P100 BX100LA4**	190
3.4	5544	1.3	419.0	60000	**C904_419.0 S3 ME3LA4**	**C904_419.0 S3 MX3LA4**	189	**C904_419.0 P100 BE100LA4**	**C904_419.0 P100 BX100LA4**	190

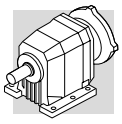

2.2 kW

n_2 min-1	M_2 Nm	S	i	R_{n2} N	IE2	IE3		IEC IE2	IEC IE3	
3.5	5421	2.2	409.8	85000	**C1004_409.8 S3 ME3LA4**	**C1004_409.8 S3 MX3LA4**	192	**C1004_409.8 P100 BE100LA4**	**C1004_409.8 P100 BX100LA4**	193
3.8	5034	2.4	380.5	85000	**C1004_380.5 S3 ME3LA4**	**C1004_380.5 S3 MX3LA4**	192	**C1004_380.5 P100 BE100LA4**	**C1004_380.5 P100 BX100LA4**	193
3.9	4892	1.5	369.8	60000	**C904_369.8 S3 ME3LA4**	**C904_369.8 S3 MX3LA4**	189	**C904_369.8 P100 BE100LA4**	**C904_369.8 P100 BX100LA4**	190
4.2	4484	1.6	339.0	60000	**C904_339.0 S3 ME3LA4**	**C904_339.0 S3 MX3LA4**	189	**C904_339.0 P100 BE100LA4**	**C904_339.0 P100 BX100LA4**	190
4.3	4422	0.9	334.3	35000	**C804_334.3 S3 ME3LA4**	**C804_334.3 S3 MX3LA4**	186	**C804_334.3 P100 BE100LA4**	**C804_334.3 P100 BX100LA4**	187
4.4	4282	2.8	323.6	85000	**C1004_323.6 S3 ME3LA4**	**C1004_323.6 S3 MX3LA4**	192	**C1004_323.6 P100 BE100LA4**	**C1004_323.6 P100 BX100LA4**	193
4.9	3875	1.9	292.9	60000	**C904_292.9 S3 ME3LA4**	**C904_292.9 S3 MX3LA4**	189	**C904_292.9 P100 BE100LA4**	**C904_292.9 P100 BX100LA4**	190
5.0	3779	1.1	285.7	35000	**C804_285.7 S3 ME3LA4**	**C804_285.7 S3 MX3LA4**	186	**C804_285.7 P100 BE100LA4**	**C804_285.7 P100 BX100LA4**	187
5.3	3552	2.0	268.5	60000	**C904_268.5 S3 ME3LA4**	**C904_268.5 S3 MX3LA4**	189	**C904_268.5 P100 BE100LA4**	**C904_268.5 P100 BX100LA4**	190
5.5	3464	1.2	261.9	35000	**C804_261.9 S3 ME3LA4**	**C804_261.9 S3 MX3LA4**	186	**C804_261.9 P100 BE100LA4**	**C804_261.9 P100 BX100LA4**	187
6.2	3065	2.3	231.7	60000	**C904_231.7 S3 ME3LA4**	**C904_231.7 S3 MX3LA4**	189	**C904_231.7 P100 BE100LA4**	**C904_231.7 P100 BX100LA4**	190
6.6	2951	1.4	215.8	35000	**C803_215.8 S3 ME3LA4**	**C803_215.8 S3 MX3LA4**	186	**C803_215.8 P100 BE100LA4**	**C803_215.8 P100 BX100LA4**	187
6.7	2810	2.6	212.4	60000	**C904_212.4 S3 ME3LA4**	**C904_212.4 S3 MX3LA4**	189	**C904_212.4 P100 BE100LA4**	**C904_212.4 P100 BX100LA4**	190
7.2	2705	1.4	197.9	35000	**C803_197.9 S3 ME3LA4**	**C803_197.9 S3 MX3LA4**	186	**C803_197.9 P100 BE100LA4**	**C803_197.9 P100 BX100LA4**	187
7.8	2520	1.6	184.4	35000	**C803_184.4 S3 ME3LA4**	**C803_184.4 S3 MX3LA4**	186	**C803_184.4 P100 BE100LA4**	**C803_184.4 P100 BX100LA4**	187
8.0	2450	0.9	179.2	25000	**C703_179.2 S3 ME3LA4**	**C703_179.2 S3 MX3LA4**	183	**C703_179.2 P100 BE100LA4**	**C703_179.2 P100 BX100LA4**	184
8.5	2310	1.7	169.0	35000	**C803_169.0 S3 ME3LA4**	**C803_169.0 S3 MX3LA4**	186	**C803_169.0 P100 BE100LA4**	**C803_169.0 P100 BX100LA4**	187
8.8	2226	1.0	162.8	25000	**C703_162.8 S3 ME3LA4**	**C703_162.8 S3 MX3LA4**	183	**C703_162.8 P100 BE100LA4**	**C703_162.8 P100 BX100LA4**	184
9.5	2055	1.1	150.3	25000	**C703_150.3 S3 ME3LA4**	**C703_150.3 S3 MX3LA4**	183	**C703_150.3 P100 BE100LA4**	**C703_150.3 P100 BX100LA4**	184
9.6	2038	2.0	149.1	35000	**C803_149.1 S3 ME3LA4**	**C803_149.1 S3 MX3LA4**	186	**C803_149.1 P100 BE100LA4**	**C803_149.1 P100 BX100LA4**	187
10.4	1878	1.2	137.4	25000	**C703_137.4 S3 ME3LA4**	**C703_137.4 S3 MX3LA4**	183	**C703_137.4 P100 BE100LA4**	**C703_137.4 P100 BX100LA4**	184
10.5	1869	2.1	136.7	35000	**C803_136.7 S3 ME3LA4**	**C803_136.7 S3 MX3LA4**	186	**C803_136.7 P100 BE100LA4**	**C803_136.7 P100 BX100LA4**	187
11.2	1695	0.9	128.1	16000	**C613_128.1 S3 ME3LA4**	**C613_128.1 S3 MX3LA4**	179	**C613_128.1 P100 BE100LA4**	**C613_128.1 P100 BX100LA4**	180
11.3	1734	1.3	126.8	25000	**C703_126.8 S3 ME3LA4**	**C703_126.8 S3 MX3LA4**	183	**C703_126.8 P100 BE100LA4**	**C703_126.8 P100 BX100LA4**	184
12.0	1633	2.4	119.5	35000	**C803_119.5 S3 ME3LA4**	**C803_119.5 S3 MX3LA4**	186	**C803_119.5 P100 BE100LA4**	**C803_119.5 P100 BX100LA4**	187
12.6	1503	1.1	113.6	16000	**C613_113.6 S3 ME3LA4**	**C613_113.6 S3 MX3LA4**	179	**C613_113.6 P100 BE100LA4**	**C613_113.6 P100 BX100LA4**	180
12.7	1537	1.5	112.4	25000	**C703_112.4 S3 ME3LA4**	**C703_112.4 S3 MX3LA4**	183	**C703_112.4 P100 BE100LA4**	**C703_112.4 P100 BX100LA4**	184
13.1	1497	2.7	109.5	35000	**C803_109.5 S3 ME3LA4**	**C803_109.5 S3 MX3LA4**	186	**C803_109.5 P100 BE100LA4**	**C803_109.5 P100 BX100LA4**	187
13.8	1419	1.6	103.8	25000	**C703_103.8 S3 ME3LA4**	**C703_103.8 S3 MX3LA4**	183	**C703_103.8 P100 BE100LA4**	**C703_103.8 P100 BX100LA4**	184
13.8	1371	1.2	103.6	16000	**C613_103.6 S3 ME3LA4**	**C613_103.6 S3 MX3LA4**	179	**C613_103.6 P100 BE100LA4**	**C613_103.6 P100 BX100LA4**	180
14.7	1331	3.0	97.4	35000	**C803_97.4 S3 ME3LA4**	**C803_97.4 S3 MX3LA4**	186	**C803_97.4 P100 BE100LA4**	**C803_97.4 P100 BX100LA4**	187
15.7	1204	1.3	91.0	16000	**C613_91.0 S3 ME3LA4**	**C613_91.0 S3 MX3LA4**	179	**C613_91.0 P100 BE100LA4**	**C613_91.0 P100 BX100LA4**	180
16.0	1220	3.3	89.3	35000	**C803_89.3 S3 ME3LA4**	**C803_89.3 S3 MX3LA4**	186	**C803_89.3 P100 BE100LA4**	**C803_89.3 P100 BX100LA4**	187
16.2	1206	1.9	88.2	25000	**C703_88.2 S3 ME3LA4**	**C703_88.2 S3 MX3LA4**	183	**C703_88.2 P100 BE100LA4**	**C703_88.2 P100 BX100LA4**	184
17.2	1099	1.5	83.0	16000	**C613_83.0 S3 ME3LA4**	**C613_83.0 S3 MX3LA4**	179	**C613_83.0 P100 BE100LA4**	**C613_83.0 P100 BX100LA4**	180
17.6	1113	2.1	81.4	25000	**C703_81.4 S3 ME3LA4**	**C703_81.4 S3 MX3LA4**	183	**C703_81.4 P100 BE100LA4**	**C703_81.4 P100 BX100LA4**	184
17.9	1092	0.9	79.9	10000	**C513_79.9 S3 ME3LA4**	**C513_79.9 S3 MX3LA4**	175	**C513_79.9 P100 BE100LA4**	**C513_79.9 P100 BX100LA4**	176
19.3	982	1.6	74.2	16000	**C613_74.2 S3 ME3LA4**	**C613_74.2 S3 MX3LA4**	179	**C613_74.2 P100 BE100LA4**	**C613_74.2 P100 BX100LA4**	180
19.6	997	1.0	72.9	10000	**C513_72.9 S3 ME3LA4**	**C513_72.9 S3 MX3LA4**	175	**C513_72.9 P100 BE100LA4**	**C513_72.9 P100 BX100LA4**	176
20.0	975	2.4	71.3	25000	**C703_71.3 S3 ME3LA4**	**C703_71.3 S3 MX3LA4**	183	**C703_71.3 P100 BE100LA4**	**C703_71.3 P100 BX100LA4**	184
21.1	896	1.8	67.7	16000	**C613_67.7 S3 ME3LA4**	**C613_67.7 S3 MX3LA4**	179	**C613_67.7 P100 BE100LA4**	**C613_67.7 P100 BX100LA4**	180
21.7	900	2.6	65.9	25000	**C703_65.9 S3 ME3LA4**	**C703_65.9 S3 MX3LA4**	183	**C703_65.9 P100 BE100LA4**	**C703_65.9 P100 BX100LA4**	184
22.1	883	1.1	64.6	10000	**C513_64.6 S3 ME3LA4**	**C513_64.6 S3 MX3LA4**	175	**C513_64.6 P100 BE100LA4**	**C513_64.6 P100 BX100LA4**	176
24.2	806	1.2	59.0	10000	**C513_59.0 S3 ME3LA4**	**C513_59.0 S3 MX3LA4**	175	**C513_59.0 P100 BE100LA4**	**C513_59.0 P100 BX100LA4**	176
24.4	775	2.1	58.6	16000	**C613_58.6 S3 ME3LA4**	**C613_58.6 S3 MX3LA4**	179	**C613_58.6 P100 BE100LA4**	**C613_58.6 P100 BX100LA4**	180
25.1	796	1.0	57.0	10000	**C512_57.0 S3 ME3LA4**	**C512_57.0 S3 MX3LA4**	175	**C512_57.0 P100 BE100LA4**	**C512_57.0 P100 BX100LA4**	176
25.3	773	3.0	56.5	25000	**C703_56.5 S3 ME3LA4**	**C703_56.5 S3 MX3LA4**	183	**C703_56.5 P100 BE100LA4**	**C703_56.5 P100 BX100LA4**	184
26.7	707	2.3	53.5	16000	**C613_53.5 S3 ME3LA4**	**C613_53.5 S3 MX3LA4**	179	**C613_53.5 P100 BE100LA4**	**C613_53.5 P100 BX100LA4**	180
27.8	718	1.0	51.4	10000	**C512_51.4 S3 ME3LA4**	**C512_51.4 S3 MX3LA4**	175	**C512_51.4 P100 BE100LA4**	**C512_51.4 P100 BX100LA4**	176
27.9	700	1.4	51.2	10000	**C513_51.2 S3 ME3LA4**	**C513_51.2 S3 MX3LA4**	175	**C513_51.2 P100 BE100LA4**	**C513_51.2 P100 BX100LA4**	176
29.9	668	1.2	47.8	10000	**C512_47.8 S3 ME3LA4**	**C512_47.8 S3 MX3LA4**	175	**C512_47.8 P100 BE100LA4**	**C512_47.8 P100 BX100LA4**	176
30	630	2.5	47.6	16000	**C613_47.6 S3 ME3LA4**	**C613_47.6 S3 MX3LA4**	179	**C613_47.6 P100 BE100LA4**	**C613_47.6 P100 BX100LA4**	180
30	642	0.9	47.0	6440	**C413_47.0 S3 ME3LA4**	**C413_47.0 S3 MX3LA4**	171	**C413_47.0 P100 BE100LA4**	**C413_47.0 P100 BX100LA4**	172
31	639	1.6	46.7	10000	**C513_46.7 S3 ME3LA4**	**C513_46.7 S3 MX3LA4**	175	**C513_46.7 P100 BE100LA4**	**C513_46.7 P100 BX100LA4**	176
33	575	2.8	43.4	16000	**C613_43.4 S3 ME3LA4**	**C613_43.4 S3 MX3LA4**	179	**C613_43.4 P100 BE100LA4**	**C613_43.4 P100 BX100LA4**	180
33	602	1.3	43.1	10000	**C512_43.1 S3 ME3LA4**	**C512_43.1 S3 MX3LA4**	175	**C512_43.1 P100 BE100LA4**	**C512_43.1 P100 BX100LA4**	176
35	553	1.8	40.5	10000	**C513_40.5 S3 ME3LA4**	**C513_40.5 S3 MX3LA4**	175	**C513_40.5 P100 BE100LA4**	**C513_40.5 P100 BX100LA4**	176
35	564	1.4	40.4	10000	**C512_40.4 S3 ME3LA4**	**C512_40.4 S3 MX3LA4**	175	**C512_40.4 P100 BE100LA4**	**C512_40.4 P100 BX100LA4**	176
35	551	1.1	40.3	6460	**C413_40.3 S3 ME3LA4**	**C413_40.3 S3 MX3LA4**	171	**C413_40.3 P100 BE100LA4**	**C413_40.3 P100 BX100LA4**	172
38	531	2.5	38.0	16000	**C612_38.0 S3 ME3LA4**	**C612_38.0 S3 MX3LA4**	179	**C612_38.0 P100 BE100LA4**	**C612_38.0 P100 BX100LA4**	180
39	518	1.0	37.1	6370	**C412_37.1 S3 ME3LA4**	**C412_37.1 S3 MX3LA4**	171	**C412_37.1 P100 BE100LA4**	**C412_37.1 P100 BX100LA4**	172
39	505	2.0	37.0	10000	**C513_37.0 S3 ME3LA4**	**C513_37.0 S3 MX3LA4**	175	**C513_37.0 P100 BE100LA4**	**C513_37.0 P100 BX100LA4**	176
39	503	1.2	36.8	6390	**C413_36.8 S3 ME3LA4**	**C413_36.8 S3 MX3LA4**	171	**C413_36.8 P100 BE100LA4**	**C413_36.8 P100 BX100LA4**	172
39	508	1.6	36.4	10000	**C512_36.4 S3 ME3LA4**	**C512_36.4 S3 MX3LA4**	175	**C512_36.4 P100 BE100LA4**	**C512_36.4 P100 BX100LA4**	176
41	473	1.0	34.6	5350	**C363_34.6 S3 ME3LA4**	**C363_34.6 S3 MX3LA4**	167	**C363_34.6 P100 BE100LA4**	**C363_34.6 P100 BX100LA4**	168
42	478	2.6	34.2	16000	**C612_34.2 S3 ME3LA4**	**C612_34.2 S3 MX3LA4**	179	**C612_34.2 P100 BE100LA4**	**C612_34.2 P100 BX100LA4**	180
43	466	1.1	33.4	6290	**C412_33.4 S3 ME3LA4**	**C412_33.4 S3 MX3LA4**	171	**C412_33.4 P100 BE100LA4**	**C412_33.4 P100 BX100LA4**	172
43	461	1.7	33.0	10000	**C512_33.0 S3 ME3LA4**	**C512_33.0 S3 MX3LA4**	175	**C512_33.0 P100 BE100LA4**	**C512_33.0 P100 BX100LA4**	176

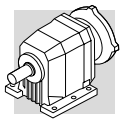

2.2 kW

n_2 min-1	M_2 Nm	S	i	R_{n2} N	IE2	IE3		IE2	IEC IE3	
45	439	1.1	31.4	6290	**C412_31.4 S3 ME3LA4**	**C412_31.4 S3 MX3LA4**	171	**C412_31.4 P100 BE100LA4**	**C412_31.4 P100 BX100LA4**	172
47	425	3.2	30.4	16000	**C612_30.4 S3 ME3LA4**	**C612_30.4 S3 MX3LA4**	179	**C612_30.4 P100 BE100LA4**	**C612_30.4 P100 BX100LA4**	180
48	411	2.4	30.1	10000	**C513_30.1 S3 ME3LA4**	**C513_30.1 S3 MX3LA4**	175	**C513_30.1 P100 BE100LA4**	**C513_30.1 P100 BX100LA4**	176
48	416	1.9	29.8	10000	**C512_29.8 S3 ME3LA4**	**C512_29.8 S3 MX3LA4**	175	**C512_29.8 P100 BE100LA4**	**C512_29.8 P100 BX100LA4**	176
50	393	1.1	28.7	5220	**C363_28.7 S3 ME3LA4**	**C363_28.7 S3 MX3LA4**	167	**C363_28.7 P100 BE100LA4**	**C363_28.7 P100 BX100LA4**	168
51	395	1.3	28.3	6190	**C412_28.3 S3 ME3LA4**	**C412_28.3 S3 MX3LA4**	171	**C412_28.3 P100 BE100LA4**	**C412_28.3 P100 BX100LA4**	172
52	375	2.6	27.4	10000	**C513_27.4 S3 ME3LA4**	**C513_27.4 S3 MX3LA4**	175	**C513_27.4 P100 BE100LA4**	**C513_27.4 P100 BX100LA4**	176
52	383	3.5	27.4	15900	**C612_27.4 S3 ME3LA4**	**C612_27.4 S3 MX3LA4**	179	**C612_27.4 P100 BE100LA4**	**C612_27.4 P100 BX100LA4**	180
55	358	1.2	26.2	5140	**C363_26.2 S3 ME3LA4**	**C363_26.2 S3 MX3LA4**	167	**C363_26.2 P100 BE100LA4**	**C363_26.2 P100 BX100LA4**	168
55	362	2.2	25.9	10000	**C512_25.9 S3 ME3LA4**	**C512_25.9 S3 MX3LA4**	175	**C512_25.9 P100 BE100LA4**	**C512_25.9 P100 BX100LA4**	176
57	351	0.9	25.1	4270	**C322_25.1 S3 ME3LA4**	**C322_25.1 S3 MX3LA4**	163	**C322_25.1 P100 BE100LA4**	**C322_25.1 P100 BX100LA4**	164
57	350	1.4	25.0	6120	**C412_25.0 S3 ME3LA4**	**C412_25.0 S3 MX3LA4**	171	**C412_25.0 P100 BE100LA4**	**C412_25.0 P100 BX100LA4**	172
61	326	2.5	23.4	10000	**C512_23.4 S3 ME3LA4**	**C512_23.4 S3 MX3LA4**	175	**C512_23.4 P100 BE100LA4**	**C512_23.4 P100 BX100LA4**	176
62	320	0.9	22.9	4240	**C322_22.9 S3 ME3LA4**	**C322_22.9 S3 MX3LA4**	163	**C322_22.9 P100 BE100LA4**	**C322_22.9 P100 BX100LA4**	164
63	315	1.6	22.6	6000	**C412_22.6 S3 ME3LA4**	**C412_22.6 S3 MX3LA4**	171	**C412_22.6 P100 BE100LA4**	**C412_22.6 P100 BX100LA4**	172
65	303	1.4	22.1	5060	**C363_22.1 S3 ME3LA4**	**C363_22.1 S3 MX3LA4**	167	**C363_22.1 P100 BE100LA4**	**C363_22.1 P100 BX100LA4**	168
68	293	2.7	21.0	10000	**C512_21.0 S3 ME3LA4**	**C512_21.0 S3 MX3LA4**	175	**C512_21.0 P100 BE100LA4**	**C512_21.0 P100 BX100LA4**	176
71	280	1.1	20.1	4200	**C322_20.1 S3 ME3LA4**	**C322_20.1 S3 MX3LA4**	163	**C322_20.1 P100 BE100LA4**	**C322_20.1 P100 BX100LA4**	164
72	276	1.8	19.8	5890	**C412_19.8 S3 ME3LA4**	**C412_19.8 S3 MX3LA4**	171	**C412_19.8 P100 BE100LA4**	**C412_19.8 P100 BX100LA4**	172
75	265	1.4	19.0	4920	**C362_19.0 S3 ME3LA4**	**C362_19.0 S3 MX3LA4**	167	**C362_19.0 P100 BE100LA4**	**C362_19.0 P100 BX100LA4**	168
76	264	3.0	18.9	10000	**C512_18.9 S3 ME3LA4**	**C512_18.9 S3 MX3LA4**	175	**C512_18.9 P100 BE100LA4**	**C512_18.9 P100 BX100LA4**	176
77	258	1.0	12.3	4100	**C322_12.3 S4 ME4SA6**		163	**C322_12.3 P112 BE112M6**		164
79	254	1.1	18.2	4120	**C322_18.2 S3 ME3LA4**	**C322_18.2 S3 MX3LA4**	163	**C322_18.2 P100 BE100LA4**	**C322_18.2 P100 BX100LA4**	164
80	248	1.9	17.8	5760	**C412_17.8 S3 ME3LA4**	**C412_17.8 S3 MX3LA4**	171	**C412_17.8 P100 BE100LA4**	**C412_17.8 P100 BX100LA4**	172
83	240	1.6	17.2	4800	**C362_17.2 S3 ME3LA4**	**C362_17.2 S3 MX3LA4**	167	**C362_17.2 P100 BE100LA4**	**C362_17.2 P100 BX100LA4**	168
85	234	1.0	11.2	4060	**C322_11.2 S4 ME4SA6**		163	**C322_11.2 P112 BE112M6**		164
90	221	2.0	15.8	5650	**C412_15.8 S3 ME3LA4**	**C412_15.8 S3 MX3LA4**	171	**C412_15.8 P100 BE100LA4**	**C412_15.8 P100 BX100LA4**	172
92	218	1.2	15.6	4060	**C322_15.6 S3 ME3LA4**	**C322_15.6 S3 MX3LA4**	163	**C322_15.6 P100 BE100LA4**	**C322_15.6 P100 BX100LA4**	164
97	206	1.8	14.8	4710	**C362_14.8 S3 ME3LA4**	**C362_14.8 S3 MX3LA4**	167	**C362_14.8 P100 BE100LA4**	**C362_14.8 P100 BX100LA4**	168
100	199	2.2	14.2	5510	**C412_14.2 S3 ME3LA4**	**C412_14.2 S3 MX3LA4**	171	**C412_14.2 P100 BE100LA4**	**C412_14.2 P100 BX100LA4**	172
102	197	1.3	14.1	3980	**C322_14.1 S3 ME3LA4**	**C322_14.1 S3 MX3LA4**	163	**C322_14.1 P100 BE100LA4**	**C322_14.1 P100 BX100LA4**	164
103	194	1.1	9.3	3960	**C322_9.3 S4 ME4SA6**		163	**C322_9.3 P112 BE112M6**		164
107	186	2.0	13.3	4590	**C362_13.3 S3 ME3LA4**	**C362_13.3 S3 MX3LA4**	167	**C362_13.3 P100 BE100LA4**	**C362_13.3 P100 BX100LA4**	168
113	177	1.2	8.5	3890	**C322_8.5 S4 ME4SA6**		163	**C322_8.5 P112 BE112M6**		164
115	173	0.9	12.4	2270	**C222_12.4 S3 ME3LA4**	**C222_12.4 S3 MX3LA4**	159	**C222_12.4 P100 BE100LA4**	**C222_12.4 P100 BX100LA4**	160
115	173	2.5	12.4	5360	**C412_12.4 S3 ME3LA4**	**C412_12.4 S3 MX3LA4**	171	**C412_12.4 P100 BE100LA4**	**C412_12.4 P100 BX100LA4**	172
116	172	1.4	12.3	3900	**C322_12.3 S3 ME3LA4**	**C322_12.3 S3 MX3LA4**	163	**C322_12.3 P100 BE100LA4**	**C322_12.3 P100 BX100LA4**	164
123	163	2.3	11.7	4490	**C362_11.7 S3 ME3LA4**	**C362_11.7 S3 MX3LA4**	167	**C362_11.7 P100 BE100LA4**	**C362_11.7 P100 BX100LA4**	168
128	156	1.5	11.2	3800	**C322_11.2 S3 ME3LA4**	**C322_11.2 S3 MX3LA4**	163	**C322_11.2 P100 BE100LA4**	**C322_11.2 P100 BX100LA4**	164
128	156	2.7	11.2	5220	**C412_11.2 S3 ME3LA4**	**C412_11.2 S3 MX3LA4**	171	**C412_11.2 P100 BE100LA4**	**C412_11.2 P100 BX100LA4**	172
129	155	1.0	11.1	2250	**C222_11.1 S3 ME3LA4**	**C222_11.1 S3 MX3LA4**	159	**C222_11.1 P100 BE100LA4**	**C222_11.1 P100 BX100LA4**	160
133	150	1.3	7.2	3810	**C322_7.2 S4 ME4SA6**		163	**C322_7.2 P112 BE112M6**		164
135	148	2.6	10.6	4320	**C362_10.6 S3 ME3LA4**	**C362_10.6 S3 MX3LA4**	167	**C362_10.6 P100 BE100LA4**	**C362_10.6 P100 BX100LA4**	168
148	135	1.1	9.6	2250	**C222_9.6 S3 ME3LA4**	**C222_9.6 S3 MX3LA4**	159	**C222_9.6 P100 BE100LA4**	**C222_9.6 P100 BX100LA4**	160
149	134	2.9	9.6	5050	**C412_9.6 S3 ME3LA4**	**C412_9.6 S3 MX3LA4**	171	**C412_9.6 P100 BE100LA4**	**C412_9.6 P100 BX100LA4**	172
152	131	1.2	6.3	3510	**C322_6.3 S4 ME4SA6**		163	**C322_6.3 P112 BE112M6**		164
154	130	1.7	9.3	3690	**C322_9.3 S3 ME3LA4**	**C322_9.3 S3 MX3LA4**	163	**C322_9.3 P100 BE100LA4**	**C322_9.3 P100 BX100LA4**	164
163	123	3.1	8.8	4210	**C362_8.8 S3 ME3LA4**	**C362_8.8 S3 MX3LA4**	167	**C362_8.8 P100 BE100LA4**	**C362_8.8 P100 BX100LA4**	168
165	121	1.1	8.7	2220	**C222_8.7 S3 ME3LA4**	**C222_8.7 S3 MX3LA4**	159	**C222_8.7 P100 BE100LA4**	**C222_8.7 P100 BX100LA4**	160
165	121	3.2	8.6	4850	**C412_8.6 S3 ME3LA4**	**C412_8.6 S3 MX3LA4**	171	**C412_8.6 P100 BE100LA4**	**C412_8.6 P100 BX100LA4**	172
169	118	1.8	8.5	3600	**C322_8.5 S3 ME3LA4**	**C322_8.5 S3 MX3LA4**	163	**C322_8.5 P100 BE100LA4**	**C322_8.5 P100 BX100LA4**	164
169	118	1.3	5.7	3450	**C322_5.7 S4 ME4SA6**		163	**C322_5.7 P112 BE112M6**		164
193	103	1.5	5.0	3410	**C322_5.0 S4 ME4SA6**		163	**C322_5.0 P112 BE112M6**		164
200	100	2.0	7.2	3480	**C322_7.2 S3 ME3LA4**	**C322_7.2 S3 MX3LA4**	163	**C322_7.2 P100 BE100LA4**	**C322_7.2 P100 BX100LA4**	164
202	99	1.3	7.1	2180	**C222_7.1 S3 ME3LA4**	**C222_7.1 S3 MX3LA4**	159	**C222_7.1 P100 BE100LA4**	**C222_7.1 P100 BX100LA4**	160
228	87	1.8	6.3	3250	**C322_6.3 S3 ME3LA4**	**C322_6.3 S3 MX3LA4**	163	**C322_6.3 P100 BE100LA4**	**C322_6.3 P100 BX100LA4**	164
235	85	1.2	6.1	2040	**C222_6.1 S3 ME3LA4**	**C222_6.1 S3 MX3LA4**	159	**C222_6.1 P100 BE100LA4**	**C222_6.1 P100 BX100LA4**	160
245	82	2.4	5.8	3710	**C362_5.8 S3 ME3LA4**	**C362_5.8 S3 MX3LA4**	167	**C362_5.8 P100 BE100LA4**	**C362_5.8 P100 BX100LA4**	168
253	79	2.0	5.7	3180	**C322_5.7 S3 ME3LA4**	**C322_5.7 S3 MX3LA4**	163	**C322_5.7 P100 BE100LA4**	**C322_5.7 P100 BX100LA4**	164
256	78	1.3	5.6	2050	**C222_5.6 S3 ME3LA4**	**C222_5.6 S3 MX3LA4**	159	**C222_5.6 P100 BE100LA4**	**C222_5.6 P100 BX100LA4**	160
271	74	2.7	5.3	3550	**C362_5.3 S3 ME3LA4**	**C362_5.3 S3 MX3LA4**	167	**C362_5.3 P100 BE100LA4**	**C362_5.3 P100 BX100LA4**	168
289	69	2.2	5.0	3100	**C322_5.0 S3 ME3LA4**	**C322_5.0 S3 MX3LA4**	163	**C322_5.0 P100 BE100LA4**	**C322_5.0 P100 BX100LA4**	164
300	67	1.5	4.8	1970	**C222_4.8 S3 ME3LA4**	**C222_4.8 S3 MX3LA4**	159	**C222_4.8 P100 BE100LA4**	**C222_4.8 P100 BX100LA4**	160
309	65	3.4	9.3	3130	**C322_9.3 S3 ME3LA2**		163	**C322_9.3 P90 BE90L2**		164
309	65	3.1	4.6	3490	**C362_4.6 S3 ME3LA4**	**C362_4.6 S3 MX3LA4**	167	**C362_4.6 P100 BE100LA4**	**C362_4.6 P100 BX100LA4**	168
318	63	2.4	4.5	3000	**C322_4.5 S3 ME3LA4**	**C322_4.5 S3 MX3LA4**	163	**C322_4.5 P100 BE100LA4**	**C322_4.5 P100 BX100LA4**	164
332	60	2.3	8.7	2000	**C222_8.7 S3 ME3LA2**		159	**C222_8.7 P90 BE90L2**		160
336	59	1.6	4.3	1970	**C222_4.3 S3 ME3LA4**	**C222_4.3 S3 MX3LA4**	159	**C222_4.3 P100 BE100LA4**	**C222_4.3 P100 BX100LA4**	160

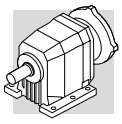

2.2 kW

n_2 min^{-1}	M_2 Nm	S	i	R_{n2} N	IE2	IE3		IE2	IEC IE3	
355	56	3.6	2.7	3380	**C362_2.7 S4 ME4SA6**			**C362_2.7 P112 BE112M6**		168
377	53	1.1	7.6	930	**C122_7.6 S3 ME3LA2**			**C122_7.6 P90 BE90L2**		156
383	52	2.9	3.7	2890	**C322_3.7 S3 ME3LA4**	**C322_3.7 S3 MX3LA4**		**C322_3.7 P100 BE100LA4**	**C322_3.7 P100 BX100LA4**	164
386	52	1.7	3.7	1890	**C222_3.7 S3 ME3LA4**	**C222_3.7 S3 MX3LA4**		**C222_3.7 P100 BE100LA4**	**C222_3.7 P100 BX100LA4**	160
401	50	4.0	7.2	2920	**C322_7.2 S3 ME3LA2**			**C322_7.2 P90 BE90L2**		164
405	49	2.6	7.1	1920	**C222_7.1 S3 ME3LA2**			**C222_7.1 P90 BE90L2**		160
419	48	2.9	3.4	2800	**C322_3.4 S3 ME3LA4**	**C322_3.4 S3 MX3LA4**		**C322_3.4 P100 BE100LA4**	**C322_3.4 P100 BX100LA4**	164
430	46	1.8	3.3	1890	**C222_3.3 S3 ME3LA4**	**C222_3.3 S3 MX3LA4**		**C222_3.3 P100 BE100LA4**	**C222_3.3 P100 BX100LA4**	160
446	45	0.9	3.2	580	**C122_3.2 S3 ME3LA4**	**C122_3.2 S3 MX3LA4**		**C122_3.2 P100 BE100LA4**	**C122_3.2 P100 BX100LA4**	156
458	44	3.6	6.3	2760	**C322_6.3 S3 ME3LA2**			**C322_6.3 P90 BE90L2**		164
472	42	2.5	6.1	1820	**C222_6.1 S3 ME3LA2**			**C222_6.1 P90 BE90L2**		160
497	40	3.2	2.9	2700	**C322_2.9 S3 ME3LA4**	**C322_2.9 S3 MX3LA4**		**C322_2.9 P100 BE100LA4**	**C322_2.9 P100 BX100LA4**	164
513	39	2.6	5.6	1770	**C222_5.6 S3 ME3LA2**			**C222_5.6 P90 BE90L2**		160
517	39	1.0	2.8	690	**C122_2.8 S3 ME3LA4**	**C122_2.8 S3 MX3LA4**		**C122_2.8 P100 BE100LA4**	**C122_2.8 P100 BX100LA4**	156
525	38	2.1	2.7	1770	**C222_2.7 S3 ME3LA4**	**C222_2.7 S3 MX3LA4**		**C222_2.7 P100 BE100LA4**	**C222_2.7 P100 BX100LA4**	160
602	33	3.0	4.8	1720	**C222_4.8 S3 ME3LA2**			**C222_4.8 P90 BE90L2**		160
674	30	3.2	4.3	1670	**C222_4.3 S3 ME3LA2**			**C222_4.3 P90 BE90L2**		160
774	26	3.5	3.7	1620	**C222_3.7 S3 ME3LA2**			**C222_3.7 P90 BE90L2**		160
786	25	1.7	3.7	970	**C122_3.7 S3 ME3LA2**			**C122_3.7 P90 BE90L2**		156
863	23	3.7	3.3	1550	**C222_3.3 S3 ME3LA2**			**C222_3.3 P90 BE90L2**		160
895	22	1.8	3.2	940	**C122_3.2 S3 ME3LA2**			**C122_3.2 P90 BE90L2**		156
1037	19	1.9	2.8	920	**C122_2.8 S3 ME3LA2**			**C122_2.8 P90 BE90L2**		156
1054	19	4.2	2.7	1490	**C222_2.7 S3 ME3LA2**			**C222_2.7 P90 BE90L2**		160

2.2 kW

n_2 min^{-1}	M_2 Nm	S	i	R_{n2} N	IE3		IEC IE3	
1.4	13281	0.9	1004	85000			**C1004_1004 P100 BXN100LA4**	193
1.6	12016	1.0	908.2	85000			**C1004_908.2 P100 BXN100LA4**	193
1.7	11157	1.1	843.3	85000			**C1004_843.3 P100 BXN100LA4**	193
1.8	10263	1.2	775.7	85000			**C1004_775.7 P100 BXN100LA4**	193
2.0	9530	1.3	720.3	85000			**C1004_720.3 P100 BXN100LA4**	193
2.3	8301	1.4	627.4	85000			**C1004_627.4 P100 BXN100LA4**	193
2.5	7710	0.9	582.8	60000			**C904_582.8 P100 BXN100LA4**	190
2.5	7708	1.6	582.6	85000			**C1004_582.6 P100 BXN100LA4**	193
2.7	7068	1.0	534.2	60000			**C904_534.2 P100 BXN100LA4**	190
2.8	6650	1.8	502.6	85000			**C1004_502.6 P100 BXN100LA4**	193
3.1	6175	1.9	466.7	85000			**C1004_466.7 P100 BXN100LA4**	193
3.1	6048	1.2	457.1	60000			**C904_457.1 P100 BXN100LA4**	190
3.4	5544	1.3	419.0	60000			**C904_419.0 P100 BXN100LA4**	190
3.5	5421	2.2	409.8	85000			**C1004_409.8 P100 BXN100LA4**	193
3.8	5034	2.4	380.5	85000			**C1004_380.5 P100 BXN100LA4**	193
3.9	4892	1.5	369.8	60000			**C904_369.8 P100 BXN100LA4**	190
4.2	4484	1.6	339.0	60000			**C904_339.0 P100 BXN100LA4**	190
4.3	4422	0.9	334.3	35000			**C804_334.3 P100 BXN100LA4**	187
4.4	4282	2.8	323.6	85000			**C1004_323.6 P100 BXN100LA4**	193
4.9	3875	1.9	292.9	60000			**C904_292.9 P100 BXN100LA4**	190
5.0	3779	1.1	285.7	35000			**C804_285.7 P100 BXN100LA4**	187
5.3	3552	2.0	268.5	60000			**C904_268.5 P100 BXN100LA4**	190
5.5	3464	1.2	261.9	35000			**C804_261.9 P100 BXN100LA4**	187
6.2	3065	2.3	231.7	60000			**C904_231.7 P100 BXN100LA4**	190
6.6	2951	1.4	215.8	35000			**C803_215.8 P100 BXN100LA4**	187
6.7	2810	2.6	212.4	60000			**C904_212.4 P100 BXN100LA4**	190
7.2	2705	1.4	197.9	35000			**C803_197.9 P100 BXN100LA4**	187
7.8	2520	1.6	184.4	35000			**C803_184.4 P100 BXN100LA4**	187
8.0	2450	0.9	179.2	25000			**C703_179.2 P100 BXN100LA4**	184
8.5	2310	1.7	169.0	35000			**C803_169.0 P100 BXN100LA4**	187
8.8	2226	1.0	162.8	25000			**C703_162.8 P100 BXN100LA4**	184
9.5	2055	1.1	150.3	25000			**C703_150.3 P100 BXN100LA4**	184
9.6	2038	2.0	149.1	35000			**C803_149.1 P100 BXN100LA4**	187

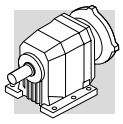

2.2 kW

n_2 min-1	M_2 Nm	S	i	R_{n2} N	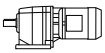 IE3		 IEC IE3	
10.4	1878	1.2	137.4	25000			**C703_137.4 P100 BXN100LA4**	184
10.5	1869	2.1	136.7	35000			**C803_136.7 P100 BXN100LA4**	187
11.2	1695	0.9	128.1	16000			**C613_128.1 P100 BXN100LA4**	180
11.3	1734	1.3	126.8	25000			**C703_126.8 P100 BXN100LA4**	184
12.0	1633	2.4	119.5	35000			**C803_119.5 P100 BXN100LA4**	187
12.6	1503	1.1	113.6	16000			**C613_113.6 P100 BXN100LA4**	180
12.7	1537	1.5	112.4	25000			**C703_112.4 P100 BXN100LA4**	184
13.1	1497	2.7	109.5	35000			**C803_109.5 P100 BXN100LA4**	187
13.8	1419	1.6	103.8	25000			**C703_103.8 P100 BXN100LA4**	184
13.8	1371	1.2	103.6	16000			**C613_103.6 P100 BXN100LA4**	180
14.7	1331	3.0	97.4	35000			**C803_97.4 P100 BXN100LA4**	187
15.7	1204	1.3	91.0	16000			**C613_91.0 P100 BXN100LA4**	180
16.0	1220	3.3	89.3	35000			**C803_89.3 P100 BXN100LA4**	187
16.2	1206	1.9	88.2	25000			**C703_88.2 P100 BXN100LA4**	184
17.2	1099	1.5	83.0	16000			**C613_83.0 P100 BXN100LA4**	180
17.6	1113	2.1	81.4	25000			**C703_81.4 P100 BXN100LA4**	184
17.9	1092	0.9	79.9	10000			**C513_79.9 P100 BXN100LA4**	176
19.3	982	1.6	74.2	16000			**C613_74.2 P100 BXN100LA4**	180
19.6	997	1.0	72.9	10000			**C513_72.9 P100 BXN100LA4**	176
20.0	975	2.4	71.3	25000			**C703_71.3 P100 BXN100LA4**	184
21.1	896	1.8	67.7	16000			**C613_67.7 P100 BXN100LA4**	180
21.7	900	2.6	65.9	25000			**C703_65.9 P100 BXN100LA4**	184
22.1	883	1.1	64.6	10000			**C513_64.6 P100 BXN100LA4**	176
24.2	806	1.2	59.0	10000			**C513_59.0 P100 BXN100LA4**	176
24.4	775	2.1	58.6	16000			**C613_58.6 P100 BXN100LA4**	180
25.1	796	1.0	57.0	10000			**C512_57.0 P100 BXN100LA4**	176
25.3	773	3.0	56.5	25000			**C703_56.5 P100 BXN100LA4**	184
26.7	707	2.3	53.5	16000			**C613_53.5 P100 BXN100LA4**	180
27.8	718	1.0	51.4	10000			**C512_51.4 P100 BXN100LA4**	176
27.9	700	1.4	51.2	10000			**C513_51.2 P100 BXN100LA4**	176
29.9	668	1.2	47.8	10000			**C512_47.8 P100 BXN100LA4**	176
30	630	2.5	47.6	16000			**C613_47.6 P100 BXN100LA4**	180
30	642	0.9	47.0	6440			**C413_47.0 P100 BXN100LA4**	172
31	639	1.6	46.7	10000			**C513_46.7 P100 BXN100LA4**	176
33	575	2.8	43.4	16000			**C613_43.4 P100 BXN100LA4**	180
33	602	1.3	43.1	10000			**C512_43.1 P100 BXN100LA4**	176
35	553	1.8	40.5	10000			**C513_40.5 P100 BXN100LA4**	176
35	564	1.4	40.4	10000			**C512_40.4 P100 BXN100LA4**	176
35	551	1.1	40.3	6460			**C413_40.3 P100 BXN100LA4**	172
38	531	2.5	38.0	16000			**C612_38.0 P100 BXN100LA4**	180
39	518	1.0	37.1	6370			**C412_37.1 P100 BXN100LA4**	172
39	505	2.0	37.0	10000			**C513_37.0 P100 BXN100LA4**	176
39	503	1.2	36.8	6390			**C413_36.8 P100 BXN100LA4**	172
39	508	1.6	36.4	10000			**C512_36.4 P100 BXN100LA4**	176
41	473	1.0	34.6	5350			**C363_34.6 P100 BXN100LA4**	168
42	478	2.6	34.2	16000			**C612_34.2 P100 BXN100LA4**	180
43	466	1.1	33.4	6290			**C412_33.4 P100 BXN100LA4**	172
43	461	1.7	33.0	10000			**C512_33.0 P100 BXN100LA4**	176
45	439	1.1	31.4	6290			**C412_31.4 P100 BXN100LA4**	172
47	425	3.2	30.4	16000			**C612_30.4 P100 BXN100LA4**	180
48	411	2.4	30.1	10000			**C513_30.1 P100 BXN100LA4**	176
48	416	1.9	29.8	10000			**C512_29.8 P100 BXN100LA4**	176
50	393	1.1	28.7	5220			**C363_28.7 P100 BXN100LA4**	168
51	395	1.3	28.3	6190			**C412_28.3 P100 BXN100LA4**	172
52	375	2.6	27.4	10000			**C513_27.4 P100 BXN100LA4**	176
52	383	3.5	27.4	15900			**C612_27.4 P100 BXN100LA4**	180
55	358	1.2	26.2	5140			**C363_26.2 P100 BXN100LA4**	168
55	362	2.2	25.9	10000			**C512_25.9 P100 BXN100LA4**	176
57	351	0.9	25.1	4270			**C322_25.1 P100 BXN100LA4**	164
57	350	1.4	25.0	6120			**C412_25.0 P100 BXN100LA4**	172
61	326	2.5	23.4	10000			**C512_23.4 P100 BXN100LA4**	176
62	320	0.9	22.9	4240			**C322_22.9 P100 BXN100LA4**	164

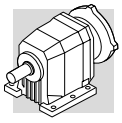

2.2 kW

n_2 min^{-1}	M_2 Nm	S	i	R_{n2} N	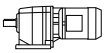 IE3		 IEC IE3	
63	315	1.6	22.6	6000			**C412_22.6 P100 BXN100LA4**	172
65	303	1.4	22.1	5060			**C363_22.1 P100 BXN100LA4**	168
68	293	2.7	21.0	10000			**C512_21.0 P100 BXN100LA4**	176
71	280	1.1	20.1	4200			**C322_20.1 P100 BXN100LA4**	164
72	276	1.8	19.8	5890			**C412_19.8 P100 BXN100LA4**	172
75	265	1.4	19.0	4920			**C362_19.0 P100 BXN100LA4**	168
76	264	3.0	18.9	10000			**C512_18.9 P100 BXN100LA4**	176
79	254	1.1	18.2	4120			**C322_18.2 P100 BXN100LA4**	164
80	248	1.9	17.8	5760			**C412_17.8 P100 BXN100LA4**	172
83	240	1.6	17.2	4800			**C362_17.2 P100 BXN100LA4**	168
90	221	2.0	15.8	5650			**C412_15.8 P100 BXN100LA4**	172
92	218	1.2	15.6	4060			**C322_15.6 P100 BXN100LA4**	164
97	206	1.8	14.8	4710			**C362_14.8 P100 BXN100LA4**	168
100	199	2.2	14.2	5510			**C412_14.2 P100 BXN100LA4**	172
102	197	1.3	14.1	3980			**C322_14.1 P100 BXN100LA4**	164
107	186	2.0	13.3	4590			**C362_13.3 P100 BXN100LA4**	168
115	173	0.9	12.4	2270			**C222_12.4 P100 BXN100LA4**	160
115	173	2.5	12.4	5360			**C412_12.4 P100 BXN100LA4**	172
116	172	1.4	12.3	3900			**C322_12.3 P100 BXN100LA4**	164
123	163	2.3	11.7	4490			**C362_11.7 P100 BXN100LA4**	168
128	156	1.5	11.2	3800			**C322_11.2 P100 BXN100LA4**	164
128	156	2.7	11.2	5220			**C412_11.2 P100 BXN100LA4**	172
129	155	1.0	11.1	2250			**C222_11.1 P100 BXN100LA4**	160
135	148	2.6	10.6	4320			**C362_10.6 P100 BXN100LA4**	168
148	135	1.1	9.6	2250			**C222_9.6 P100 BXN100LA4**	160
149	134	2.9	9.6	5050			**C412_9.6 P100 BXN100LA4**	172
154	130	1.7	9.3	3690			**C322_9.3 P100 BXN100LA4**	164
163	123	3.1	8.8	4210			**C362_8.8 P100 BXN100LA4**	168
165	121	1.1	8.7	2220			**C222_8.7 P100 BXN100LA4**	160
165	121	3.2	8.6	4850			**C412_8.6 P100 BXN100LA4**	172
169	118	1.8	8.5	3600			**C322_8.5 P100 BXN100LA4**	164
200	100	2.0	7.2	3480			**C322_7.2 P100 BXN100LA4**	164
202	99	1.3	7.1	2180			**C222_7.1 P100 BXN100LA4**	160
228	87	1.8	6.3	3250			**C322_6.3 P100 BXN100LA4**	164
235	85	1.2	6.1	2040			**C222_6.1 P100 BXN100LA4**	160
245	82	2.4	5.8	3710			**C362_5.8 P100 BXN100LA4**	168
253	79	2.0	5.7	3180			**C322_5.7 P100 BXN100LA4**	164
256	78	1.3	5.6	2050			**C222_5.6 P100 BXN100LA4**	160
271	74	2.7	5.3	3550			**C362_5.3 P100 BXN100LA4**	168
289	69	2.2	5.0	3100			**C322_5.0 P100 BXN100LA4**	164
300	67	1.5	4.8	1970			**C222_4.8 P100 BXN100LA4**	160
309	65	3.1	4.6	3490			**C362_4.6 P100 BXN100LA4**	168
318	63	2.4	4.5	3000			**C322_4.5 P100 BXN100LA4**	164
336	59	1.6	4.3	1970			**C222_4.3 P100 BXN100LA4**	160
383	52	2.9	3.7	2890			**C322_3.7 P100 BXN100LA4**	164
386	52	1.7	3.7	1890			**C222_3.7 P100 BXN100LA4**	160
419	48	2.9	3.4	2800			**C322_3.4 P100 BXN100LA4**	164
430	46	1.8	3.3	1890			**C222_3.3 P100 BXN100LA4**	160
446	45	0.9	3.2	580			**C122_3.2 P100 BXN100LA4**	156
497	40	3.2	2.9	2700			**C322_2.9 P100 BXN100LA4**	164
517	39	1.0	2.8	690			**C122_2.8 P100 BXN100LA4**	156
525	38	2.1	2.7	1770			**C222_2.7 P100 BXN100LA4**	160

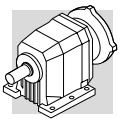

3 kW

n_2 min-1	M_2 Nm	S	i	R_{n2} N	IE2	IE3		IEC IE2	IEC IE3	
2.0	12965	0.9	720.3	85000	**C1004_720.3 S3 ME3LB4**	**C1004_720.3 S3 MX3LB4**	192	**C1004_720.3 P100 BE100LB4**	**C1004_720.3 P100 BX100LB4**	193
2.3	11293	1.1	627.4	85000	**C1004_627.4 S3 ME3LB4**	**C1004_627.4 S3 MX3LB4**	192	**C1004_627.4 P100 BE100LB4**	**C1004_627.4 P100 BX100LB4**	193
2.5	10487	1.1	582.6	85000	**C1004_582.6 S3 ME3LB4**	**C1004_582.6 S3 MX3LB4**	192	**C1004_582.6 P100 BE100LB4**	**C1004_582.6 P100 BX100LB4**	193
2.9	9047	1.3	502.6	85000	**C1004_502.6 S3 ME3LB4**	**C1004_502.6 S3 MX3LB4**	192	**C1004_502.6 P100 BE100LB4**	**C1004_502.6 P100 BX100LB4**	193
3.1	8401	1.4	466.7	85000	**C1004_466.7 S3 ME3LB4**	**C1004_466.7 S3 MX3LB4**	192	**C1004_466.7 P100 BE100LB4**	**C1004_466.7 P100 BX100LB4**	193
3.4	7543	1.0	419.0	60000	**C904_419.0 S3 ME3LB4**	**C904_419.0 S3 MX3LB4**	189	**C904_419.0 P100 BE100LB4**	**C904_419.0 P100 BX100LB4**	190
3.5	7376	1.6	409.8	85000	**C1004_409.8 S3 ME3LB4**	**C1004_409.8 S3 MX3LB4**	192	**C1004_409.8 P100 BE100LB4**	**C1004_409.8 P100 BX100LB4**	193
3.8	6849	1.8	380.5	85000	**C1004_380.5 S3 ME3LB4**	**C1004_380.5 S3 MX3LB4**	192	**C1004_380.5 P100 BE100LB4**	**C1004_380.5 P100 BX100LB4**	193
3.9	6656	1.1	369.8	60000	**C904_369.8 S3 ME3LB4**	**C904_369.8 S3 MX3LB4**	189	**C904_369.8 P100 BE100LB4**	**C904_369.8 P100 BX100LB4**	190
4.2	6101	1.2	339.0	60000	**C904_339.0 S3 ME3LB4**	**C904_339.0 S3 MX3LB4**	189	**C904_339.0 P100 BE100LB4**	**C904_339.0 P100 BX100LB4**	190
4.4	5825	2.1	323.6	85000	**C1004_323.6 S3 ME3LB4**	**C1004_323.6 S3 MX3LB4**	192	**C1004_323.6 P100 BE100LB4**	**C1004_323.6 P100 BX100LB4**	193
4.8	5409	2.2	300.5	85000	**C1004_300.5 S3 ME3LB4**	**C1004_300.5 S3 MX3LB4**	192	**C1004_300.5 P100 BE100LB4**	**C1004_300.5 P100 BX100LB4**	193
4.9	5272	1.4	292.9	60000	**C904_292.9 S3 ME3LB4**	**C904_292.9 S3 MX3LB4**	189	**C904_292.9 P100 BE100LB4**	**C904_292.9 P100 BX100LB4**	190
5.4	4833	1.5	268.5	60000	**C904_268.5 S3 ME3LB4**	**C904_268.5 S3 MX3LB4**	189	**C904_268.5 P100 BE100LB4**	**C904_268.5 P100 BX100LB4**	190
5.5	4734	2.5	263.0	85000	**C1004_263.0 S3 ME3LB4**	**C1004_263.0 S3 MX3LB4**	192	**C1004_263.0 P100 BE100LB4**	**C1004_263.0 P100 BX100LB4**	193
5.9	4396	2.7	244.2	85000	**C1004_244.2 S3 ME3LB4**	**C1004_244.2 S3 MX3LB4**	192	**C1004_244.2 P100 BE100LB4**	**C1004_244.2 P100 BX100LB4**	193
6.2	4170	1.7	231.7	60000	**C904_231.7 S3 ME3LB4**	**C904_231.7 S3 MX3LB4**	189	**C904_231.7 P100 BE100LB4**	**C904_231.7 P100 BX100LB4**	190
6.7	4015	1.0	215.8	35000	**C803_215.8 S3 ME3LB4**	**C803_215.8 S3 MX3LB4**	186	**C803_215.8 P100 BE100LB4**	**C803_215.8 P100 BX100LB4**	187
6.8	3823	1.9	212.4	60000	**C904_212.4 S3 ME3LB4**	**C904_212.4 S3 MX3LB4**	189	**C904_212.4 P100 BE100LB4**	**C904_212.4 P100 BX100LB4**	190
7.3	3680	1.0	197.9	35000	**C803_197.9 S3 ME3LB4**	**C803_197.9 S3 MX3LB4**	186	**C803_197.9 P100 BE100LB4**	**C803_197.9 P100 BX100LB4**	187
7.8	3429	1.2	184.4	35000	**C803_184.4 S3 ME3LB4**	**C803_184.4 S3 MX3LB4**	186	**C803_184.4 P100 BE100LB4**	**C803_184.4 P100 BX100LB4**	187
8.4	3201	2.2	172.1	60000	**C903_172.1 S3 ME3LB4**	**C903_172.1 S3 MX3LB4**	189	**C903_172.1 P100 BE100LB4**	**C903_172.1 P100 BX100LB4**	190
8.5	3143	1.3	169.0	35000	**C803_169.0 S3 ME3LB4**	**C803_169.0 S3 MX3LB4**	186	**C803_169.0 P100 BE100LB4**	**C803_169.0 P100 BX100LB4**	187
9.1	2934	2.4	157.8	60000	**C903_157.8 S3 ME3LB4**	**C903_157.8 S3 MX3LB4**	189	**C903_157.8 P100 BE100LB4**	**C903_157.8 P100 BX100LB4**	190
9.7	2773	1.4	149.1	35000	**C803_149.1 S3 ME3LB4**	**C803_149.1 S3 MX3LB4**	186	**C803_149.1 P100 BE100LB4**	**C803_149.1 P100 BX100LB4**	187
9.8	2722	2.6	146.3	60000	**C903_146.3 S3 ME3LB4**	**C903_146.3 S3 MX3LB4**	189	**C903_146.3 P100 BE100LB4**	**C903_146.3 P100 BX100LB4**	190
10.5	2542	1.6	136.7	35000	**C803_136.7 S3 ME3LB4**	**C803_136.7 S3 MX3LB4**	186	**C803_136.7 P100 BE100LB4**	**C803_136.7 P100 BX100LB4**	187
10.7	2495	2.8	134.1	60000	**C903_134.1 S3 ME3LB4**	**C903_134.1 S3 MX3LB4**	189	**C903_134.1 P100 BE100LB4**	**C903_134.1 P100 BX100LB4**	190
11.4	2359	1.0	126.8	25000	**C703_126.8 S3 ME3LB4**	**C703_126.8 S3 MX3LB4**	183	**C703_126.8 P100 BE100LB4**	**C703_126.8 P100 BX100LB4**	184
12.1	2222	1.8	119.5	35000	**C803_119.5 S3 ME3LB4**	**C803_119.5 S3 MX3LB4**	186	**C803_119.5 P100 BE100LB4**	**C803_119.5 P100 BX100LB4**	187
12.3	2171	3.3	116.7	60000	**C903_116.7 S3 ME3LB4**	**C903_116.7 S3 MX3LB4**	189	**C903_116.7 P100 BE100LB4**	**C903_116.7 P100 BX100LB4**	190
12.8	2091	1.1	112.4	25000	**C703_112.4 S3 ME3LB4**	**C703_112.4 S3 MX3LB4**	183	**C703_112.4 P100 BE100LB4**	**C703_112.4 P100 BX100LB4**	184
13.2	2037	2.0	109.5	35000	**C803_109.5 S3 ME3LB4**	**C803_109.5 S3 MX3LB4**	186	**C803_109.5 P100 BE100LB4**	**C803_109.5 P100 BX100LB4**	187
13.9	1931	1.2	103.8	25000	**C703_103.8 S3 ME3LB4**	**C703_103.8 S3 MX3LB4**	183	**C703_103.8 P100 BE100LB4**	**C703_103.8 P100 BX100LB4**	184
14.8	1811	2.2	97.4	35000	**C803_97.4 S3 ME3LB4**	**C803_97.4 S3 MX3LB4**	186	**C803_97.4 P100 BE100LB4**	**C803_97.4 P100 BX100LB4**	187
15.8	1638	1.0	91.0	16000	**C613_91.0 S3 ME3LB4**	**C613_91.0 S3 MX3LB4**	179	**C613_91.0 P100 BE100LB4**	**C613_91.0 P100 BX100LB4**	180
16.1	1660	2.4	89.3	35000	**C803_89.3 S3 ME3LB4**	**C803_89.3 S3 MX3LB4**	186	**C803_89.3 P100 BE100LB4**	**C803_89.3 P100 BX100LB4**	187
16.3	1640	1.4	88.2	25000	**C703_88.2 S3 ME3LB4**	**C703_88.2 S3 MX3LB4**	183	**C703_88.2 P100 BE100LB4**	**C703_88.2 P100 BX100LB4**	184
17.3	1495	1.1	83.0	16000	**C613_83.0 S3 ME3LB4**	**C613_83.0 S3 MX3LB4**	179	**C613_83.0 P100 BE100LB4**	**C613_83.0 P100 BX100LB4**	180
17.7	1514	1.5	81.4	25000	**C703_81.4 S3 ME3LB4**	**C703_81.4 S3 MX3LB4**	183	**C703_81.4 P100 BE100LB4**	**C703_81.4 P100 BX100LB4**	184
18.7	1431	2.8	76.9	35000	**C803_76.9 S3 ME3LB4**	**C803_76.9 S3 MX3LB4**	186	**C803_76.9 P100 BE100LB4**	**C803_76.9 P100 BX100LB4**	187
19.4	1336	1.2	74.2	16000	**C613_74.2 S3 ME3LB4**	**C613_74.2 S3 MX3LB4**	179	**C613_74.2 P100 BE100LB4**	**C613_74.2 P100 BX100LB4**	180
20.2	1327	1.7	71.3	25000	**C703_71.3 S3 ME3LB4**	**C703_71.3 S3 MX3LB4**	183	**C703_71.3 P100 BE100LB4**	**C703_71.3 P100 BX100LB4**	184
20.4	1311	3.1	70.5	35000	**C803_70.5 S3 ME3LB4**	**C803_70.5 S3 MX3LB4**	186	**C803_70.5 P100 BE100LB4**	**C803_70.5 P100 BX100LB4**	187
21.3	1218	1.3	67.7	16000	**C613_67.7 S3 ME3LB4**	**C613_67.7 S3 MX3LB4**	179	**C613_67.7 P100 BE100LB4**	**C613_67.7 P100 BX100LB4**	180
21.9	1225	1.9	65.9	25000	**C703_65.9 S3 ME3LB4**	**C703_65.9 S3 MX3LB4**	183	**C703_65.9 P100 BE100LB4**	**C703_65.9 P100 BX100LB4**	184
24.4	1097	0.9	59.0	10000	**C513_59.0 S3 ME3LB4**	**C513_59.0 S3 MX3LB4**	175	**C513_59.0 P100 BE100LB4**	**C513_59.0 P100 BX100LB4**	176
24.6	1055	1.5	58.6	16000	**C613_58.6 S3 ME3LB4**	**C613_58.6 S3 MX3LB4**	179	**C613_58.6 P100 BE100LB4**	**C613_58.6 P100 BX100LB4**	180
25.5	1051	2.2	56.5	25000	**C703_56.5 S3 ME3LB4**	**C703_56.5 S3 MX3LB4**	183	**C703_56.5 P100 BE100LB4**	**C703_56.5 P100 BX100LB4**	184
26.9	962	1.7	53.5	16000	**C613_53.5 S3 ME3LB4**	**C613_53.5 S3 MX3LB4**	179	**C613_53.5 P100 BE100LB4**	**C613_53.5 P100 BX100LB4**	180
27.6	970	2.4	52.2	25000	**C703_52.2 S3 ME3LB4**	**C703_52.2 S3 MX3LB4**	183	**C703_52.2 P100 BE100LB4**	**C703_52.2 P100 BX100LB4**	184
28.1	952	1.1	51.2	10000	**C513_51.2 S3 ME3LB4**	**C513_51.2 S3 MX3LB4**	175	**C513_51.2 P100 BE100LB4**	**C513_51.2 P100 BX100LB4**	176
30	857	1.9	47.6	16000	**C613_47.6 S3 ME3LB4**	**C613_47.6 S3 MX3LB4**	179	**C613_47.6 P100 BE100LB4**	**C613_47.6 P100 BX100LB4**	180
31	869	1.2	46.7	10000	**C513_46.7 S3 ME3LB4**	**C513_46.7 S3 MX3LB4**	175	**C513_46.7 P100 BE100LB4**	**C513_46.7 P100 BX100LB4**	176
32	831	2.8	44.7	25000	**C703_44.7 S3 ME3LB4**	**C703_44.7 S3 MX3LB4**	183	**C703_44.7 P100 BE100LB4**	**C703_44.7 P100 BX100LB4**	184
33	782	2.0	43.4	16000	**C613_43.4 S3 ME3LB4**	**C613_43.4 S3 MX3LB4**	179	**C613_43.4 P100 BE100LB4**	**C613_43.4 P100 BX100LB4**	180
33	819	0.9	43.1	10000	**C512_43.1 S3 ME3LB4**	**C512_43.1 S3 MX3LB4**	175	**C512_43.1 P100 BE100LB4**	**C512_43.1 P100 BX100LB4**	176

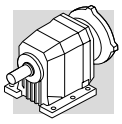

3 kW

n_2 min-1	M_2 Nm	S	i	R_{n2} N	IE2	IE3		IE2	IEC IE3	
35	767	3.0	41.3	25000	**C703_41.3 S3 ME3LB4**	**C703_41.3 S3 MX3LB4**	183	**C703_41.3 P100 BE100LB4**	**C703_41.3 P100 BX100LB4**	184
36	753	1.3	40.5	10000	**C513_40.5 S3 ME3LB4**	**C513_40.5 S3 MX3LB4**	175	**C513_40.5 P100 BE100LB4**	**C513_40.5 P100 BX100LB4**	176
36	767	1.0	40.4	10000	**C512_40.4 S3 ME3LB4**	**C512_40.4 S3 MX3LB4**	175	**C512_40.4 P100 BE100LB4**	**C512_40.4 P100 BX100LB4**	176
38	722	1.9	38.0	16000	**C612_38.0 S3 ME3LB4**	**C612_38.0 S3 MX3LB4**	179	**C612_38.0 P100 BE100LB4**	**C612_38.0 P100 BX100LB4**	180
39	687	1.5	37.0	10000	**C513_37.0 S3 ME3LB4**	**C513_37.0 S3 MX3LB4**	175	**C513_37.0 P100 BE100LB4**	**C513_37.0 P100 BX100LB4**	176
40	691	1.1	36.4	10000	**C512_36.4 S3 ME3LB4**	**C512_36.4 S3 MX3LB4**	175	**C512_36.4 P100 BE100LB4**	**C512_36.4 P100 BX100LB4**	176
40	651	2.4	36.1	16000	**C613_36.1 S3 ME3LB4**	**C613_36.1 S3 MX3LB4**	179	**C613_36.1 P100 BE100LB4**	**C613_36.1 P100 BX100LB4**	180
42	650	1.9	34.2	16000	**C612_34.2 S3 ME3LB4**	**C612_34.2 S3 MX3LB4**	179	**C612_34.2 P100 BE100LB4**	**C612_34.2 P100 BX100LB4**	180
44	628	1.3	33.0	10000	**C512_33.0 S3 ME3LB4**	**C512_33.0 S3 MX3LB4**	175	**C512_33.0 P100 BE100LB4**	**C512_33.0 P100 BX100LB4**	176
44	594	2.6	33.0	16000	**C613_33.0 S3 ME3LB4**	**C613_33.0 S3 MX3LB4**	179	**C613_33.0 P100 BE100LB4**	**C613_33.0 P100 BX100LB4**	180
46	581	1.0	31.2	5550	**C413_31.2 S3 ME3LB4**	**C413_31.2 S3 MX3LB4**	171	**C413_31.2 P100 BE100LB4**	**C413_31.2 P100 BX100LB4**	172
47	578	2.3	30.4	15900	**C612_30.4 S3 ME3LB4**	**C612_30.4 S3 MX3LB4**	179	**C612_30.4 P100 BE100LB4**	**C612_30.4 P100 BX100LB4**	180
48	559	1.8	30.1	10000	**C513_30.1 S3 ME3LB4**	**C513_30.1 S3 MX3LB4**	175	**C513_30.1 P100 BE100LB4**	**C513_30.1 P100 BX100LB4**	176
48	566	1.4	29.8	10000	**C512_29.8 S3 ME3LB4**	**C512_29.8 S3 MX3LB4**	175	**C512_29.8 P100 BE100LB4**	**C512_29.8 P100 BX100LB4**	176
51	538	0.9	28.3	5460	**C412_28.3 S3 ME3LB4**	**C412_28.3 S3 MX3LB4**	171	**C412_28.3 P100 BE100LB4**	**C412_28.3 P100 BX100LB4**	172
52	511	1.9	27.4	10000	**C513_27.4 S3 ME3LB4**	**C513_27.4 S3 MX3LB4**	175	**C513_27.4 P100 BE100LB4**	**C513_27.4 P100 BX100LB4**	176
53	521	2.6	27.4	15400	**C612_27.4 S3 ME3LB4**	**C612_27.4 S3 MX3LB4**	179	**C612_27.4 P100 BE100LB4**	**C612_27.4 P100 BX100LB4**	180
55	487	0.9	26.2	4500	**C363_26.2 S3 ME3LB4**	**C363_26.2 S3 MX3LB4**	167	**C363_26.2 P100 BE100LB4**	**C363_26.2 P100 BX100LB4**	168
56	492	1.6	25.9	10000	**C512_25.9 S3 ME3LB4**	**C512_25.9 S3 MX3LB4**	175	**C512_25.9 P100 BE100LB4**	**C512_25.9 P100 BX100LB4**	176
57	476	1.1	25.0	5480	**C412_25.0 S3 ME3LB4**	**C412_25.0 S3 MX3LB4**	171	**C412_25.0 P100 BE100LB4**	**C412_25.0 P100 BX100LB4**	172
58	472	2.9	24.8	15100	**C612_24.8 S3 ME3LB4**	**C612_24.8 S3 MX3LB4**	179	**C612_24.8 P100 BE100LB4**	**C612_24.8 P100 BX100LB4**	180
62	444	1.8	23.4	10000	**C512_23.4 S3 ME3LB4**	**C512_23.4 S3 MX3LB4**	175	**C512_23.4 P100 BE100LB4**	**C512_23.4 P100 BX100LB4**	176
64	429	1.2	22.6	5420	**C412_22.6 S3 ME3LB4**	**C412_22.6 S3 MX3LB4**	171	**C412_22.6 P100 BE100LB4**	**C412_22.6 P100 BX100LB4**	172
64	425	3.2	22.4	14600	**C612_22.4 S3 ME3LB4**	**C612_22.4 S3 MX3LB4**	179	**C612_22.4 P100 BE100LB4**	**C612_22.4 P100 BX100LB4**	180
65	412	1.0	22.1	4530	**C363_22.1 S3 ME3LB4**	**C363_22.1 S3 MX3LB4**	167	**C363_22.1 P100 BE100LB4**	**C363_22.1 P100 BX100LB4**	168
69	398	2.0	21.0	10000	**C512_21.0 S3 ME3LB4**	**C512_21.0 S3 MX3LB4**	175	**C512_21.0 P100 BE100LB4**	**C512_21.0 P100 BX100LB4**	176
73	375	1.3	19.8	5390	**C412_19.8 S3 ME3LB4**	**C412_19.8 S3 MX3LB4**	171	**C412_19.8 P100 BE100LB4**	**C412_19.8 P100 BX100LB4**	172
76	361	1.1	19.0	4450	**C362_19.0 S3 ME3LB4**	**C362_19.0 S3 MX3LB4**	167	**C362_19.0 P100 BE100LB4**	**C362_19.0 P100 BX100LB4**	168
76	359	2.2	18.9	10000	**C512_18.9 S3 ME3LB4**	**C512_18.9 S3 MX3LB4**	175	**C512_18.9 P100 BE100LB4**	**C512_18.9 P100 BX100LB4**	176
81	338	1.4	17.8	5300	**C412_17.8 S3 ME3LB4**	**C412_17.8 S3 MX3LB4**	171	**C412_17.8 P100 BE100LB4**	**C412_17.8 P100 BX100LB4**	172
84	327	1.2	17.2	4400	**C362_17.2 S3 ME3LB4**	**C362_17.2 S3 MX3LB4**	167	**C362_17.2 P100 BE100LB4**	**C362_17.2 P100 BX100LB4**	168
87	315	2.5	16.6	9790	**C512_16.6 S3 ME3LB4**	**C512_16.6 S3 MX3LB4**	175	**C512_16.6 P100 BE100LB4**	**C512_16.6 P100 BX100LB4**	176
91	301	1.5	15.8	5240	**C412_15.8 S3 ME3LB4**	**C412_15.8 S3 MX3LB4**	171	**C412_15.8 P100 BE100LB4**	**C412_15.8 P100 BX100LB4**	172
92	296	0.9	15.6	3680	**C322_15.6 S3 ME3LB4**	**C322_15.6 S3 MX3LB4**	163	**C322_15.6 P100 BE100LB4**	**C322_15.6 P100 BX100LB4**	164
96	284	2.8	15.0	9540	**C512_15.0 S3 ME3LB4**	**C512_15.0 S3 MX3LB4**	175	**C512_15.0 P100 BE100LB4**	**C512_15.0 P100 BX100LB4**	176
98	280	1.4	14.8	4340	**C362_14.8 S3 ME3LB4**	**C362_14.8 S3 MX3LB4**	167	**C362_14.8 P100 BE100LB4**	**C362_14.8 P100 BX100LB4**	168
101	271	1.6	14.2	5140	**C412_14.2 S3 ME3LB4**	**C412_14.2 S3 MX3LB4**	171	**C412_14.2 P100 BE100LB4**	**C412_14.2 P100 BX100LB4**	172
102	267	0.9	14.1	3650	**C322_14.1 S3 ME3LB4**	**C322_14.1 S3 MX3LB4**	163	**C322_14.1 P100 BE100LB4**	**C322_14.1 P100 BX100LB4**	164
108	253	1.5	13.3	4260	**C362_13.3 S3 ME3LB4**	**C362_13.3 S3 MX3LB4**	167	**C362_13.3 P100 BE100LB4**	**C362_13.3 P100 BX100LB4**	168
110	249	3.0	13.1	9200	**C512_13.1 S3 ME3LB4**	**C512_13.1 S3 MX3LB4**	175	**C512_13.1 P100 BE100LB4**	**C512_13.1 P100 BX100LB4**	176
116	235	1.8	12.4	5040	**C412_12.4 S3 ME3LB4**	**C412_12.4 S3 MX3LB4**	171	**C412_12.4 P100 BE100LB4**	**C412_12.4 P100 BX100LB4**	172
117	234	1.0	12.3	3580	**C322_12.3 S3 ME3LB4**	**C322_12.3 S3 MX3LB4**	163	**C322_12.3 P100 BE100LB4**	**C322_12.3 P100 BX100LB4**	164
123	222	1.7	11.7	4200	**C362_11.7 S3 ME3LB4**	**C362_11.7 S3 MX3LB4**	167	**C362_11.7 P100 BE100LB4**	**C362_11.7 P100 BX100LB4**	168
129	213	1.1	11.2	3520	**C322_11.2 S3 ME3LB4**	**C322_11.2 S3 MX3LB4**	163	**C322_11.2 P100 BE100LB4**	**C322_11.2 P100 BX100LB4**	164
129	212	2.0	11.2	4930	**C412_11.2 S3 ME3LB4**	**C412_11.2 S3 MX3LB4**	171	**C412_11.2 P100 BE100LB4**	**C412_11.2 P100 BX100LB4**	172
136	201	1.9	10.6	4100	**C362_10.6 S3 ME3LB4**	**C362_10.6 S3 MX3LB4**	167	**C362_10.6 P100 BE100LB4**	**C362_10.6 P100 BX100LB4**	168
143	190	1.6	20.1	3480	**C322_20.1 S3 ME3LB2**		163	**C322_20.1 P100 BE100L2**		164
150	182	2.1	9.6	4800	**C412_9.6 S3 ME3LB4**	**C412_9.6 S3 MX3LB4**	171	**C412_9.6 P100 BE100LB4**	**C412_9.6 P100 BX100LB4**	172
155	177	1.2	9.3	3450	**C322_9.3 S3 ME3LB4**	**C322_9.3 S3 MX3LB4**	163	**C322_9.3 P100 BE100LB4**	**C322_9.3 P100 BX100LB4**	164
158	172	1.6	18.2	3410	**C322_18.2 S3 ME3LB2**		163	**C322_18.2 P100 BE100L2**		164
164	167	2.3	8.8	3990	**C362_8.8 S3 ME3LB4**	**C362_8.8 S3 MX3LB4**	167	**C362_8.8 P100 BE100LB4**	**C362_8.8 P100 BX100LB4**	168
167	164	2.3	8.6	4600	**C412_8.6 S3 ME3LB4**	**C412_8.6 S3 MX3LB4**	171	**C412_8.6 P100 BE100LB4**	**C412_8.6 P100 BX100LB4**	172
170	161	1.3	8.5	3400	**C322_8.5 S3 ME3LB4**	**C322_8.5 S3 MX3LB4**	163	**C322_8.5 P100 BE100LB4**	**C322_8.5 P100 BX100LB4**	164
179	153	2.4	8.0	3840	**C362_8.0 S3 ME3LB4**	**C362_8.0 S3 MX3LB4**	167	**C362_8.0 P100 BE100LB4**	**C362_8.0 P100 BX100LB4**	168
182	150	1.2	15.8	1940	**C222_15.8 S3 ME3LB2**		159	**C222_15.8 P100 BE100L2**		160
185	147	1.8	15.6	3340	**C322_15.6 S3 ME3LB2**		163	**C322_15.6 P100 BE100L2**		164
201	136	1.5	7.2	3300	**C322_7.2 S3 ME3LB4**	**C322_7.2 S3 MX3LB4**	163	**C322_7.2 P100 BE100LB4**	**C322_7.2 P100 BX100LB4**	164

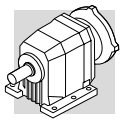

3 kW

n_2 min-1	M_2 Nm	S	i	R_{n2} N	IE2	IE3		IE2	IEC IE3	
203	135	1.0	7.1	1940	**C222_7.1 S3 ME3LB4**	**C222_7.1 S3 MX3LB4**	159	**C222_7.1 P100 BE100LB4**	**C222_7.1 P100 BX100LB4**	160
204	134	2.6	7.1	4490	**C412_7.1 S3 ME3LB4**	**C412_7.1 S3 MX3LB4**	171	**C412_7.1 P100 BE100LB4**	**C412_7.1 P100 BX100LB4**	172
205	133	1.9	14.1	3250	**C322_14.1 S3 ME3LB2**		163	**C322_14.1 P100 BE100L2**		164
212	129	2.8	6.8	3780	**C362_6.8 S3 ME3LB4**	**C362_6.8 S3 MX3LB4**	167	**C362_6.8 P100 BE100LB4**	**C362_6.8 P100 BX100LB4**	168
226	121	2.9	6.4	4370	**C412_6.4 S3 ME3LB4**	**C412_6.4 S3 MX3LB4**	171	**C412_6.4 P100 BE100LB4**	**C412_6.4 P100 BX100LB4**	172
230	119	1.3	6.3	3100	**C322_6.3 S3 ME3LB4**	**C322_6.3 S3 MX3LB4**	163	**C322_6.3 P100 BE100LB4**	**C322_6.3 P100 BX100LB4**	164
234	116	2.1	12.3	3190	**C322_12.3 S3 ME3LB2**		163	**C322_12.3 P100 BE100L2**		164
237	116	0.9	6.1	1600	**C222_6.1 S3 ME3LB4**	**C222_6.1 S3 MX3LB4**	159	**C222_6.1 P100 BE100LB4**	**C222_6.1 P100 BX100LB4**	160
242	113	2.3	6.0	4090	**C412_6.0 S3 ME3LB4**	**C412_6.0 S3 MX3LB4**	171	**C412_6.0 P100 BE100LB4**	**C412_6.0 P100 BX100LB4**	172
246	111	1.8	5.8	3530	**C362_5.8 S3 ME3LB4**	**C362_5.8 S3 MX3LB4**	167	**C362_5.8 P100 BE100LB4**	**C362_5.8 P100 BX100LB4**	168
255	107	1.4	5.7	3040	**C322_5.7 S3 ME3LB4**	**C322_5.7 S3 MX3LB4**	163	**C322_5.7 P100 BE100LB4**	**C322_5.7 P100 BX100LB4**	164
257	106	2.2	11.2	3090	**C322_11.2 S3 ME3LB2**		163	**C322_11.2 P100 BE100L2**		164
258	106	1.0	5.6	1750	**C222_5.6 S3 ME3LB4**	**C222_5.6 S3 MX3LB4**	159	**C222_5.6 P100 BE100LB4**	**C222_5.6 P100 BX100LB4**	160
260	105	1.5	11.1	1850	**C222_11.1 S3 ME3LB2**		159	**C222_11.1 P100 BE100L2**		160
273	100	2.0	5.3	3380	**C362_5.3 S3 ME3LB4**	**C362_5.3 S3 MX3LB4**	167	**C362_5.3 P100 BE100LB4**	**C362_5.3 P100 BX100LB4**	168
291	94	1.6	5.0	2950	**C322_5.0 S3 ME3LB4**	**C322_5.0 S3 MX3LB4**	163	**C322_5.0 P100 BE100LB4**	**C322_5.0 P100 BX100LB4**	164
299	91	1.6	9.6	1880	**C222_9.6 S3 ME3LB2**		159	**C222_9.6 P100 BE100L2**		160
302	91	1.1	4.8	1780	**C222_4.8 S3 ME3LB4**	**C222_4.8 S3 MX3LB4**	159	**C222_4.8 P100 BE100LB4**	**C222_4.8 P100 BX100LB4**	160
309	89	2.9	4.7	3880	**C412_4.7 S3 ME3LB4**	**C412_4.7 S3 MX3LB4**	171	**C412_4.7 P100 BE100LB4**	**C412_4.7 P100 BX100LB4**	172
310	88	2.5	9.3	2990	**C322_9.3 S3 ME3LB2**		163	**C322_9.3 P100 BE100L2**		164
312	88	2.3	4.6	3270	**C362_4.6 S3 ME3LB4**	**C362_4.6 S3 MX3LB4**	167	**C362_4.6 P100 BE100LB4**	**C362_4.6 P100 BX100LB4**	168
320	85	1.8	4.5	2880	**C322_4.5 S3 ME3LB4**	**C322_4.5 S3 MX3LB4**	163	**C322_4.5 P100 BE100LB4**	**C322_4.5 P100 BX100LB4**	164
333	82	1.7	8.7	1840	**C222_8.7 S3 ME3LB2**		159	**C222_8.7 P100 BE100L2**		160
338	81	1.2	4.3	1800	**C222_4.3 S3 ME3LB4**	**C222_4.3 S3 MX3LB4**	159	**C222_4.3 P100 BE100LB4**	**C222_4.3 P100 BX100LB4**	160
339	80	2.6	8.5	2900	**C322_8.5 S3 ME3LB2**		163	**C322_8.5 P100 BE100L2**		164
343	80	2.5	4.2	3190	**C362_4.2 S3 ME3LB4**	**C362_4.2 S3 MX3LB4**	167	**C362_4.2 P100 BE100LB4**	**C362_4.2 P100 BX100LB4**	168
386	71	2.1	3.7	2780	**C322_3.7 S3 ME3LB4**	**C322_3.7 S3 MX3LB4**	163	**C322_3.7 P100 BE100LB4**	**C322_3.7 P100 BX100LB4**	164
388	70	1.3	3.7	1740	**C222_3.7 S3 ME3LB4**	**C222_3.7 S3 MX3LB4**	159	**C222_3.7 P100 BE100LB4**	**C222_3.7 P100 BX100LB4**	160
402	68	3.0	7.2	2810	**C322_7.2 S3 ME3LB2**		163	**C322_7.2 P100 BE100L2**		164
407	67	1.9	7.1	1800	**C222_7.1 S3 ME3LB2**		159	**C222_7.1 P100 BE100L2**		160
413	66	3.0	3.5	3130	**C362_3.5 S3 ME3LB4**	**C362_3.5 S3 MX3LB4**	167	**C362_3.5 P100 BE100LB4**	**C362_3.5 P100 BX100LB4**	168
422	65	2.1	3.4	2690	**C322_3.4 S3 ME3LB4**	**C322_3.4 S3 MX3LB4**	163	**C322_3.4 P100 BE100LB4**	**C322_3.4 P100 BX100LB4**	164
433	63	1.3	3.3	1740	**C222_3.3 S3 ME3LB4**	**C222_3.3 S3 MX3LB4**	159	**C222_3.3 P100 BE100LB4**	**C222_3.3 P100 BX100LB4**	160
460	59	2.6	6.3	2650	**C322_6.3 S3 ME3LB2**		163	**C322_6.3 P100 BE100L2**		164
473	58	1.8	6.1	1690	**C222_6.1 S3 ME3LB2**		159	**C222_6.1 P100 BE100L2**		160
500	55	2.4	2.9	2610	**C322_2.9 S3 ME3LB4**	**C322_2.9 S3 MX3LB4**	163	**C322_2.9 P100 BE100LB4**	**C322_2.9 P100 BX100LB4**	164
509	53	2.9	5.7	2570	**C322_5.7 S3 ME3LB2**		163	**C322_5.7 P100 BE100L2**		164
515	53	1.9	5.6	1650	**C222_5.6 S3 ME3LB2**		159	**C222_5.6 P100 BE100L2**		160
529	52	1.5	2.7	1660	**C222_2.7 S3 ME3LB4**	**C222_2.7 S3 MX3LB4**	159	**C222_2.7 P100 BE100LB4**	**C222_2.7 P100 BX100LB4**	160
582	47	3.3	5.0	2500	**C322_5.0 S3 ME3LB2**		163	**C322_5.0 P100 BE100L2**		164
604	45	2.2	4.8	1620	**C222_4.8 S3 ME3LB2**		159	**C222_4.8 P100 BE100L2**		160
640	43	3.6	4.5	2400	**C322_4.5 S3 ME3LB2**		163	**C322_4.5 P100 BE100L2**		164
676	40	2.3	4.3	1580	**C222_4.3 S3 ME3LB2**		159	**C222_4.3 P100 BE100L2**		160
771	35	4.2	3.7	2320	**C322_3.7 S3 ME3LB2**		163	**C322_3.7 P100 BE100L2**		164
777	35	2.6	3.7	1540	**C222_3.7 S3 ME3LB2**		159	**C222_3.7 P100 BE100L2**		160
789	35	1.2	3.7	560	**C122_3.7 S3 ME3LB2**		155	**C122_3.7 P100 BE100L2**		156
866	31	2.7	3.3	1480	**C222_3.3 S3 ME3LB2**		159	**C222_3.3 P100 BE100L2**		160
898	30	1.3	3.2	630	**C122_3.2 S3 ME3LB2**		155	**C122_3.2 P100 BE100L2**		156
1041	26	1.4	2.8	750	**C122_2.8 S3 ME3LB2**		155	**C122_2.8 P100 BE100L2**		156
1058	26	3.1	2.7	1430	**C222_2.7 S3 ME3LB2**		159	**C222_2.7 P100 BE100L2**		160

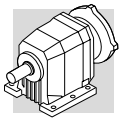

3 kW

n_2 min^{-1}	M_2 Nm	S	i	R_{n2} N	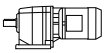 IE3		 IEC IE3		
2.0	12965	0.9	720.3	85000			**C1004_720.3 P100 BXN100LB4**	193	
2.3	11293	1.1	627.4	85000			**C1004_627.4 P100 BXN100LB4**	193	
2.5	10487	1.1	582.6	85000			**C1004_582.6 P100 BXN100LB4**	193	
2.9	9047	1.3	502.6	85000			**C1004_502.6 P100 BXN100LB4**	193	
3.1	8401	1.4	466.7	85000			**C1004_466.7 P100 BXN100LB4**	193	
3.4	7543	1.0	419.0	60000			**C904_419.0 P100 BXN100LB4**	190	
3.5	7376	1.6	409.8	85000			**C1004_409.8 P100 BXN100LB4**	193	
3.8	6849	1.8	380.5	85000			**C1004_380.5 P100 BXN100LB4**	193	
3.9	6656	1.1	369.8	60000			**C904_369.8 P100 BXN100LB4**	190	
4.2	6101	1.2	339.0	60000			**C904_339.0 P100 BXN100LB4**	190	
4.4	5825	2.1	323.6	85000			**C1004_323.6 P100 BXN100LB4**	193	
4.8	5409	2.2	300.5	85000			**C1004_300.5 P100 BXN100LB4**	193	
4.9	5272	1.4	292.9	60000			**C904_292.9 P100 BXN100LB4**	190	
5.4	4833	1.5	268.5	60000			**C904_268.5 P100 BXN100LB4**	190	
5.5	4734	2.5	263.0	85000			**C1004_263.0 P100 BXN100LB4**	193	
5.9	4396	2.7	244.2	85000			**C1004_244.2 P100 BXN100LB4**	193	
6.2	4170	1.7	231.7	60000			**C904_231.7 P100 BXN100LB4**	190	
6.7	4015	1.0	215.8	35000			**C803_215.8 P100 BXN100LB4**	187	
6.8	3823	1.9	212.4	60000			**C904_212.4 P100 BXN100LB4**	190	
7.3	3680	1.0	197.9	35000			**C803_197.9 P100 BXN100LB4**	187	
7.8	3429	1.2	184.4	35000			**C803_184.4 P100 BXN100LB4**	187	
8.4	3201	2.2	172.1	60000			**C903_172.1 P100 BXN100LB4**	190	
8.5	3143	1.3	169.0	35000			**C803_169.0 P100 BXN100LB4**	187	
9.1	2934	2.4	157.8	60000			**C903_157.8 P100 BXN100LB4**	190	
9.7	2773	1.4	149.1	35000			**C803_149.1 P100 BXN100LB4**	187	
9.8	2722	2.6	146.3	60000			**C903_146.3 P100 BXN100LB4**	190	
10.5	2542	1.6	136.7	35000			**C803_136.7 P100 BXN100LB4**	187	
10.7	2495	2.8	134.1	60000			**C903_134.1 P100 BXN100LB4**	190	
11.4	2359	1.0	126.8	25000			**C703_126.8 P100 BXN100LB4**	184	
12.1	2222	1.8	119.5	35000			**C803_119.5 P100 BXN100LB4**	187	
12.3	2171	3.3	116.7	60000			**C903_116.7 P100 BXN100LB4**	190	
12.8	2091	1.1	112.4	25000			**C703_112.4 P100 BXN100LB4**	184	
13.2	2037	2.0	109.5	35000			**C803_109.5 P100 BXN100LB4**	187	
13.9	1931	1.2	103.8	25000			**C703_103.8 P100 BXN100LB4**	184	
14.8	1811	2.2	97.4	35000			**C803_97.4 P100 BXN100LB4**	187	
15.8	1638	1.0	91.0	16000			**C613_91.0 P100 BXN100LB4**	180	
16.1	1660	2.4	89.3	35000			**C803_89.3 P100 BXN100LB4**	187	
16.3	1640	1.4	88.2	25000			**C703_88.2 P100 BXN100LB4**	184	
17.3	1495	1.1	83.0	16000			**C613_83.0 P100 BXN100LB4**	180	
17.7	1514	1.5	81.4	25000			**C703_81.4 P100 BXN100LB4**	184	
18.7	1431	2.8	76.9	35000			**C803_76.9 P100 BXN100LB4**	187	
19.4	1336	1.2	74.2	16000			**C613_74.2 P100 BXN100LB4**	180	
20.2	1327	1.7	71.3	25000			**C703_71.3 P100 BXN100LB4**	184	
20.4	1311	3.1	70.5	35000			**C803_70.5 P100 BXN100LB4**	187	
21.3	1218	1.3	67.7	16000			**C613_67.7 P100 BXN100LB4**	180	
21.9	1225	1.9	65.9	25000			**C703_65.9 P100 BXN100LB4**	184	
24.4	1097	0.9	59.0	10000			**C513_59.0 P100 BXN100LB4**	176	
24.6	1055	1.5	58.6	16000			**C613_58.6 P100 BXN100LB4**	180	
25.5	1051	2.2	56.5	25000			**C703_56.5 P100 BXN100LB4**	184	
26.9	962	1.7	53.5	16000			**C613_53.5 P100 BXN100LB4**	180	

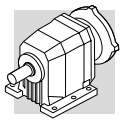

3 kW

n_2 min-1	M_2 Nm	S	i	R_{n2} N	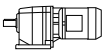 IE3		 IEC IE3	
27.6	970	2.4	52.2	25000			**C703_52.2 P100 BXN100LB4**	184
28.1	952	1.1	51.2	10000			**C513_51.2 P100 BXN100LB4**	176
30	857	1.9	47.6	16000			**C613_47.6 P100 BXN100LB4**	180
31	869	1.2	46.7	10000			**C513_46.7 P100 BXN100LB4**	176
32	831	2.8	44.7	25000			**C703_44.7 P100 BXN100LB4**	184
33	782	2.0	43.4	16000			**C613_43.4 P100 BXN100LB4**	180
33	819	0.9	43.1	10000			**C512_43.1 P100 BXN100LB4**	176
35	767	3.0	41.3	25000			**C703_41.3 P100 BXN100LB4**	184
36	753	1.3	40.5	10000			**C513_40.5 P100 BXN100LB4**	176
36	767	1.0	40.4	10000			**C512_40.4 P100 BXN100LB4**	176
38	722	1.9	38.0	16000			**C612_38.0 P100 BXN100LB4**	180
39	687	1.5	37.0	10000			**C513_37.0 P100 BXN100LB4**	176
40	691	1.1	36.4	10000			**C512_36.4 P100 BXN100LB4**	176
40	651	2.4	36.1	16000			**C613_36.1 P100 BXN100LB4**	180
42	650	1.9	34.2	16000			**C612_34.2 P100 BXN100LB4**	180
44	628	1.3	33.0	10000			**C512_33.0 P100 BXN100LB4**	176
44	594	2.6	33.0	16000			**C613_33.0 P100 BXN100LB4**	180
46	581	1.0	31.2	5550			**C413_31.2 P100 BXN100LB4**	172
47	578	2.3	30.4	15900			**C612_30.4 P100 BXN100LB4**	180
48	559	1.8	30.1	10000			**C513_30.1 P100 BXN100LB4**	176
48	566	1.4	29.8	10000			**C512_29.8 P100 BXN100LB4**	176
51	538	0.9	28.3	5460			**C412_28.3 P100 BXN100LB4**	172
52	511	1.9	27.4	10000			**C513_27.4 P100 BXN100LB4**	176
53	521	2.6	27.4	15400			**C612_27.4 P100 BXN100LB4**	180
55	487	0.9	26.2	4500			**C363_26.2 P100 BXN100LB4**	168
56	492	1.6	25.9	10000			**C512_25.9 P100 BXN100LB4**	176
57	476	1.1	25.0	5480			**C412_25.0 P100 BXN100LB4**	172
58	472	2.9	24.8	15100			**C612_24.8 P100 BXN100LB4**	180
62	444	1.8	23.4	10000			**C512_23.4 P100 BXN100LB4**	176
64	429	1.2	22.6	5420			**C412_22.6 P100 BXN100LB4**	172
64	425	3.2	22.4	14600			**C612_22.4 P100 BXN100LB4**	180
65	412	1.0	22.1	4530			**C363_22.1 P100 BXN100LB4**	168
69	398	2.0	21.0	10000			**C512_21.0 P100 BXN100LB4**	176
73	375	1.3	19.8	5390			**C412_19.8 P100 BXN100LB4**	172
76	361	1.1	19.0	4450			**C362_19.0 P100 BXN100LB4**	168
76	359	2.2	18.9	10000			**C512_18.9 P100 BXN100LB4**	176
81	338	1.4	17.8	5300			**C412_17.8 P100 BXN100LB4**	172
84	327	1.2	17.2	4400			**C362_17.2 P100 BXN100LB4**	168
87	315	2.5	16.6	9790			**C512_16.6 P100 BXN100LB4**	176
91	301	1.5	15.8	5240			**C412_15.8 P100 BXN100LB4**	172
92	296	0.9	15.6	3680			**C322_15.6 P100 BXN100LB4**	164
96	284	2.8	15.0	9540			**C512_15.0 P100 BXN100LB4**	176
98	280	1.4	14.8	4340			**C362_14.8 P100 BXN100LB4**	168
101	271	1.6	14.2	5140			**C412_14.2 P100 BXN100LB4**	172
102	267	0.9	14.1	3650			**C322_14.1 P100 BXN100LB4**	164
108	253	1.5	13.3	4260			**C362_13.3 P100 BXN100LB4**	168
110	249	3.0	13.1	9200			**C512_13.1 P100 BXN100LB4**	176
116	235	1.8	12.4	5040			**C412_12.4 P100 BXN100LB4**	172
117	234	1.0	12.3	3580			**C322_12.3 P100 BXN100LB4**	164
123	222	1.7	11.7	4200			**C362_11.7 P100 BXN100LB4**	168

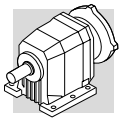

3 kW

n_2 min-1	M_2 Nm	S	i	R_{n2} N	IE3		IEC IE3	
129	213	1.1	11.2	3520			**C322_11.2 P100 BXN100LB4**	164
129	212	2.0	11.2	4930			**C412_11.2 P100 BXN100LB4**	172
136	201	1.9	10.6	4100			**C362_10.6 P100 BXN100LB4**	168
150	182	2.1	9.6	4800			**C412_9.6 P100 BXN100LB4**	
155	177	1.2	9.3	3450			**C322_9.3 P100 BXN100LB4**	
164	167	2.3	8.8	3990			**C362_8.8 P100 BXN100LB4**	
167	164	2.3	8.6	4600			**C412_8.6 P100 BXN100LB4**	
170	161	1.3	8.5	3400			**C322_8.5 P100 BXN100LB4**	
179	153	2.4	8.0	3840			**C362_8.0 P100 BXN100LB4**	
201	136	1.5	7.2	3300			**C322_7.2 P100 BXN100LB4**	
203	135	1.0	7.1	1940			**C222_7.1 P100 BXN100LB4**	160
204	134	2.6	7.1	4490			**C412_7.1 P100 BXN100LB4**	172
212	129	2.8	6.8	3780			**C362_6.8 P100 BXN100LB4**	168
226	121	2.9	6.4	4370			**C412_6.4 P100 BXN100LB4**	172
230	119	1.3	6.3	3100			**C322_6.3 P100 BXN100LB4**	164
237	116	0.9	6.1	1600			**C222_6.1 P100 BXN100LB4**	160
242	113	2.3	6.0	4090			**C412_6.0 P100 BXN100LB4**	172
246	111	1.8	5.8	3530			**C362_5.8 P100 BXN100LB4**	168
255	107	1.4	5.7	3040			**C322_5.7 P100 BXN100LB4**	164
258	106	1.0	5.6	1750			**C222_5.6 P100 BXN100LB4**	160
273	100	2.0	5.3	3380			**C362_5.3 P100 BXN100LB4**	168
291	94	1.6	5.0	2950			**C322_5.0 P100 BXN100LB4**	164
302	91	1.1	4.8	1780			**C222_4.8 P100 BXN100LB4**	160
309	89	2.9	4.7	3880			**C412_4.7 P100 BXN100LB4**	172
312	88	2.3	4.6	3270			**C362_4.6 P100 BXN100LB4**	168
320	85	1.8	4.5	2880			**C322_4.5 P100 BXN100LB4**	164
338	81	1.2	4.3	1800			**C222_4.3 P100 BXN100LB4**	160
343	80	2.5	4.2	3190			**C362_4.2 P100 BXN100LB4**	168
386	71	2.1	3.7	2780			**C322_3.7 P100 BXN100LB4**	164
388	70	1.3	3.7	1740			**C222_3.7 P100 BXN100LB4**	160
413	66	3.0	3.5	3130			**C362_3.5 P100 BXN100LB4**	168
422	65	2.1	3.4	2690			**C322_3.4 P100 BXN100LB4**	164
433	63	1.3	3.3	1740			**C222_3.3 P100 BXN100LB4**	160
500	55	2.4	2.9	2610			**C322_2.9 P100 BXN100LB4**	164
529	52	1.5	2.7	1660			**C222_2.7 P100 BXN100LB4**	160

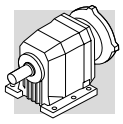

4 kW

n_2 min-1	M_2 Nm	S	i	R_{n2} N	IE2	IE3		IEC IE2	IEC IE3	
2.9	12214	1.0	502.6	85000	**C1004_502.6 S4 ME4SA4**	**C1004_502.6 S4 MX4SA4**	192	**C1004_502.6 P112 BE112M4**	**C1004_502.6 P112 BX112M4**	193
3.1	11342	1.1	466.7	85000	**C1004_466.7 S4 ME4SA4**	**C1004_466.7 S4 MX4SA4**	192	**C1004_466.7 P112 BE112M4**	**C1004_466.7 P112 BX112M4**	193
3.5	9957	1.2	409.8	85000	**C1004_409.8 S4 ME4SA4**	**C1004_409.8 S4 MX4SA4**	192	**C1004_409.8 P112 BE112M4**	**C1004_409.8 P112 BX112M4**	193
3.8	9246	1.3	380.5	85000	**C1004_380.5 S4 ME4SA4**	**C1004_380.5 S4 MX4SA4**	192	**C1004_380.5 P112 BE112M4**	**C1004_380.5 P112 BX112M4**	193
4.4	7864	1.5	323.6	85000	**C1004_323.6 S4 ME4SA4**	**C1004_323.6 S4 MX4SA4**	192	**C1004_323.6 P112 BE112M4**	**C1004_323.6 P112 BX112M4**	193
4.8	7302	1.6	300.5	85000	**C1004_300.5 S4 ME4SA4**	**C1004_300.5 S4 MX4SA4**	192	**C1004_300.5 P112 BE112M4**	**C1004_300.5 P112 BX112M4**	193
4.9	7118	1.0	292.9	60000	**C904_292.9 S4 ME4SA4**	**C904_292.9 S4 MX4SA4**	189	**C904_292.9 P112 BE112M4**	**C904_292.9 P112 BX112M4**	190
5.4	6524	1.1	268.5	60000	**C904_268.5 S4 ME4SA4**	**C904_268.5 S4 MX4SA4**	189	**C904_268.5 P112 BE112M4**	**C904_268.5 P112 BX112M4**	190
5.5	6391	1.9	263.0	85000	**C1004_263.0 S4 ME4SA4**	**C1004_263.0 S4 MX4SA4**	192	**C1004_263.0 P112 BE112M4**	**C1004_263.0 P112 BX112M4**	193
5.9	5934	2.0	244.2	85000	**C1004_244.2 S4 ME4SA4**	**C1004_244.2 S4 MX4SA4**	192	**C1004_244.2 P112 BE112M4**	**C1004_244.2 P112 BX112M4**	193
6.2	5630	1.3	231.7	60000	**C904_231.7 S4 ME4SA4**	**C904_231.7 S4 MX4SA4**	189	**C904_231.7 P112 BE112M4**	**C904_231.7 P112 BX112M4**	190
6.8	5161	1.4	212.4	60000	**C904_212.4 S4 ME4SA4**	**C904_212.4 S4 MX4SA4**	189	**C904_212.4 P112 BE112M4**	**C904_212.4 P112 BX112M4**	190
7.2	4851	2.5	199.6	85000	**C1004_199.6 S4 ME4SA4**	**C1004_199.6 S4 MX4SA4**	192	**C1004_199.6 P112 BE112M4**	**C1004_199.6 P112 BX112M4**	193
7.8	4504	2.7	185.4	85000	**C1004_185.4 S4 ME4SA4**	**C1004_185.4 S4 MX4SA4**	192	**C1004_185.4 P112 BE112M4**	**C1004_185.4 P112 BX112M4**	193
8.4	4322	1.7	172.1	60000	**C903_172.1 S4 ME4SA4**	**C903_172.1 S4 MX4SA4**	189	**C903_172.1 P112 BE112M4**	**C903_172.1 P112 BX112M4**	190
8.5	4243	0.9	169.0	35000	**C803_169.0 S4 ME4SA4**	**C803_169.0 S4 MX4SA4**	186	**C803_169.0 P112 BE112M4**	**C803_169.0 P112 BX112M4**	187
9.1	3961	1.8	157.8	60000	**C903_157.8 S4 ME4SA4**	**C903_157.8 S4 MX4SA4**	189	**C903_157.8 P112 BE112M4**	**C903_157.8 P112 BX112M4**	190
9.7	3744	1.1	149.1	35000	**C803_149.1 S4 ME4SA4**	**C803_149.1 S4 MX4SA4**	186	**C803_149.1 P112 BE112M4**	**C803_149.1 P112 BX112M4**	187
9.8	3674	2.0	146.3	60000	**C903_146.3 S4 ME4SA4**	**C903_146.3 S4 MX4SA4**	189	**C903_146.3 P112 BE112M4**	**C903_146.3 P112 BX112M4**	190
10.5	3432	1.2	136.7	35000	**C803_136.7 S4 ME4SA4**	**C803_136.7 S4 MX4SA4**	186	**C803_136.7 P112 BE112M4**	**C803_136.7 P112 BX112M4**	187
10.7	3368	2.1	134.1	60000	**C903_134.1 S4 ME4SA4**	**C903_134.1 S4 MX4SA4**	189	**C903_134.1 P112 BE112M4**	**C903_134.1 P112 BX112M4**	190
12.1	3000	1.3	119.5	35000	**C803_119.5 S4 ME4SA4**	**C803_119.5 S4 MX4SA4**	186	**C803_119.5 P112 BE112M4**	**C803_119.5 P112 BX112M4**	187
12.3	2931	2.5	116.7	60000	**C903_116.7 S4 ME4SA4**	**C903_116.7 S4 MX4SA4**	189	**C903_116.7 P112 BE112M4**	**C903_116.7 P112 BX112M4**	190
13.2	2750	1.5	109.5	35000	**C803_109.5 S4 ME4SA4**	**C803_109.5 S4 MX4SA4**	186	**C803_109.5 P112 BE112M4**	**C803_109.5 P112 BX112M4**	187
13.5	2687	2.6	107.0	60000	**C903_107.0 S4 ME4SA4**	**C903_107.0 S4 MX4SA4**	189	**C903_107.0 P112 BE112M4**	**C903_107.0 P112 BX112M4**	190
14.8	2445	1.6	97.4	35000	**C803_97.4 S4 ME4SA4**	**C803_97.4 S4 MX4SA4**	186	**C803_97.4 P112 BE112M4**	**C803_97.4 P112 BX112M4**	187
15.0	2417	3.0	96.2	60000	**C903_96.2 S4 ME4SA4**	**C903_96.2 S4 MX4SA4**	189	**C903_96.2 P112 BE112M4**	**C903_96.2 P112 BX112M4**	190
16.1	2242	1.8	89.3	35000	**C803_89.3 S4 ME4SA4**	**C803_89.3 S4 MX4SA4**	186	**C803_89.3 P112 BE112M4**	**C803_89.3 P112 BX112M4**	187
16.3	2215	1.0	88.2	25000	**C703_88.2 S4 ME4SA4**	**C703_88.2 S4 MX4SA4**	183	**C703_88.2 P112 BE112M4**	**C703_88.2 P112 BX112M4**	184
17.7	2044	1.1	81.4	25000	**C703_81.4 S4 ME4SA4**	**C703_81.4 S4 MX4SA4**	183	**C703_81.4 P112 BE112M4**	**C703_81.4 P112 BX112M4**	184
18.7	1931	2.1	76.9	35000	**C803_76.9 S4 ME4SA4**	**C803_76.9 S4 MX4SA4**	186	**C803_76.9 P112 BE112M4**	**C803_76.9 P112 BX112M4**	187
20.2	1791	1.3	71.3	25000	**C703_71.3 S4 ME4SA4**	**C703_71.3 S4 MX4SA4**	183	**C703_71.3 P112 BE112M4**	**C703_71.3 P112 BX112M4**	184
20.4	1770	2.3	70.5	35000	**C803_70.5 S4 ME4SA4**	**C803_70.5 S4 MX4SA4**	186	**C803_70.5 P112 BE112M4**	**C803_70.5 P112 BX112M4**	187
21.3	1645	1.0	67.7	16000	**C613_67.7 S4 ME4SA4**	**C613_67.7 S4 MX4SA4**	179	**C613_67.7 P112 BE112M4**	**C613_67.7 P112 BX112M4**	180
21.9	1654	1.4	65.9	25000	**C703_65.9 S4 ME4SA4**	**C703_65.9 S4 MX4SA4**	183	**C703_65.9 P112 BE112M4**	**C703_65.9 P112 BX112M4**	184
23.0	1570	2.5	62.5	35000	**C803_62.5 S4 ME4SA4**	**C803_62.5 S4 MX4SA4**	186	**C803_62.5 P112 BE112M4**	**C803_62.5 P112 BX112M4**	187
24.6	1424	1.1	58.6	16000	**C613_58.6 S4 ME4SA4**	**C613_58.6 S4 MX4SA4**	179	**C613_58.6 P112 BE112M4**	**C613_58.6 P112 BX112M4**	180
25.1	1439	2.8	57.3	35000	**C803_57.3 S4 ME4SA4**	**C803_57.3 S4 MX4SA4**	186	**C803_57.3 P112 BE112M4**	**C803_57.3 P112 BX112M4**	187
25.5	1419	1.6	56.5	25000	**C703_56.5 S4 ME4SA4**	**C703_56.5 S4 MX4SA4**	183	**C703_56.5 P112 BE112M4**	**C703_56.5 P112 BX112M4**	184
26.9	1299	1.2	53.5	16000	**C613_53.5 S4 ME4SA4**	**C613_53.5 S4 MX4SA4**	179	**C613_53.5 P112 BE112M4**	**C613_53.5 P112 BX112M4**	180
27.6	1310	1.8	52.2	25000	**C703_52.2 S4 ME4SA4**	**C703_52.2 S4 MX4SA4**	183	**C703_52.2 P112 BE112M4**	**C703_52.2 P112 BX112M4**	184
30	1157	1.4	47.6	16000	**C613_47.6 S4 ME4SA4**	**C613_47.6 S4 MX4SA4**	179	**C613_47.6 P112 BE112M4**	**C613_47.6 P112 BX112M4**	180
30	1191	3.2	47.4	35000	**C803_47.4 S4 ME4SA4**	**C803_47.4 S4 MX4SA4**	186	**C803_47.4 P112 BE112M4**	**C803_47.4 P112 BX112M4**	187
32	1122	2.0	44.7	25000	**C703_44.7 S4 ME4SA4**	**C703_44.7 S4 MX4SA4**	183	**C703_44.7 P112 BE112M4**	**C703_44.7 P112 BX112M4**	184
33	1092	3.5	43.5	35000	**C803_43.5 S4 ME4SA4**	**C803_43.5 S4 MX4SA4**	186	**C803_43.5 P112 BE112M4**	**C803_43.5 P112 BX112M4**	187
33	1056	1.5	43.4	16000	**C613_43.4 S4 ME4SA4**	**C613_43.4 S4 MX4SA4**	179	**C613_43.4 P112 BE112M4**	**C613_43.4 P112 BX112M4**	180
35	1036	2.2	41.3	25000	**C703_41.3 S4 ME4SA4**	**C703_41.3 S4 MX4SA4**	183	**C703_41.3 P112 BE112M4**	**C703_41.3 P112 BX112M4**	184
36	1016	1.0	40.5	10000	**C513_40.5 S4 ME4SA4**	**C513_40.5 S4 MX4SA4**	175	**C513_40.5 P112 BE112M4**	**C513_40.5 P112 BX112M4**	176
38	975	1.4	38.0	16000	**C612_38.0 S4 ME4SA4**	**C612_38.0 S4 MX4SA4**	179	**C612_38.0 P112 BE112M4**	**C612_38.0 P112 BX112M4**	180
39	928	1.1	37.0	10000	**C513_37.0 S4 ME4SA4**	**C513_37.0 S4 MX4SA4**	175	**C513_37.0 P112 BE112M4**	**C513_37.0 P112 BX112M4**	176
40	878	1.8	36.1	15700	**C613_36.1 S4 ME4SA4**	**C613_36.1 S4 MX4SA4**	179	**C613_36.1 P112 BE112M4**	**C613_36.1 P112 BX112M4**	180
41	891	2.4	34.7	23400	**C702_34.7 S4 ME4SA4**	**C702_34.7 S4 MX4SA4**	183	**C702_34.7 P112 BE112M4**	**C702_34.7 P112 BX112M4**	184
42	878	1.4	34.2	15700	**C612_34.2 S4 ME4SA4**	**C612_34.2 S4 MX4SA4**	179	**C612_34.2 P112 BE112M4**	**C612_34.2 P112 BX112M4**	180
44	847	0.9	33.0	10000	**C512_33.0 S4 ME4SA4**	**C512_33.0 S4 MX4SA4**	175	**C512_33.0 P112 BE112M4**	**C512_33.0 P112 BX112M4**	176
44	801	1.9	33.0	15500	**C613_33.0 S4 ME4SA4**	**C613_33.0 S4 MX4SA4**	179	**C613_33.0 P112 BE112M4**	**C613_33.0 P112 BX112M4**	180
47	781	1.7	30.4	15300	**C612_30.4 S4 ME4SA4**	**C612_30.4 S4 MX4SA4**	179	**C612_30.4 P112 BE112M4**	**C612_30.4 P112 BX112M4**	180
48	755	1.3	30.1	9880	**C513_30.1 S4 ME4SA4**	**C513_30.1 S4 MX4SA4**	175	**C513_30.1 P112 BE112M4**	**C513_30.1 P112 BX112M4**	176

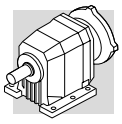

4 kW

n_2 min-1	M_2 Nm	S	i	R_{n2} N	IE2	IE3		IEC IE2	IEC IE3	
48	764	1.0	29.8	10000	**C512_29.8 S4 ME4SA4**	**C512_29.8 S4 MX4SA4**	175	**C512_29.8 P112 BE112M4**	**C512_29.8 P112 BX112M4**	184
52	711	3.0	27.7	22300	**C702_27.7 S4 ME4SA4**	**C702_27.7 S4 MX4SA4**	183	**C702_27.7 P112 BE112M4**	**C702_27.7 P112 BX112M4**	176
52	689	1.4	27.4	9550	**C513_27.4 S4 ME4SA4**	**C513_27.4 S4 MX4SA4**	175	**C513_27.4 P112 BE112M4**	**C513_27.4 P112 BX112M4**	180
53	703	1.9	27.4	14900	**C612_27.4 S4 ME4SA4**	**C612_27.4 S4 MX4SA4**	179	**C612_27.4 P112 BE112M4**	**C612_27.4 P112 BX112M4**	180
54	651	2.2	26.8	14700	**C613_26.8 S4 ME4SA4**	**C613_26.8 S4 MX4SA4**	179	**C613_26.8 P112 BE112M4**	**C613_26.8 P112 BX112M4**	176
56	665	1.2	25.9	10000	**C512_25.9 S4 ME4SA4**	**C512_25.9 S4 MX4SA4**	175	**C512_25.9 P112 BE112M4**	**C512_25.9 P112 BX112M4**	180
58	637	2.1	24.8	14600	**C612_24.8 S4 ME4SA4**	**C612_24.8 S4 MX4SA4**	179	**C612_24.8 P112 BE112M4**	**C612_24.8 P112 BX112M4**	176
60	600	1.5	23.9	9250	**C513_23.9 S4 ME4SA4**	**C513_23.9 S4 MX4SA4**	175	**C513_23.9 P112 BE112M4**	**C513_23.9 P112 BX112M4**	176
62	599	1.3	23.4	10000	**C512_23.4 S4 ME4SA4**	**C512_23.4 S4 MX4SA4**	175	**C512_23.4 P112 BE112M4**	**C512_23.4 P112 BX112M4**	180
64	573	2.4	22.4	14200	**C612_22.4 S4 ME4SA4**	**C612_22.4 S4 MX4SA4**	179	**C612_22.4 P112 BE112M4**	**C612_22.4 P112 BX112M4**	176
69	538	1.5	21.0	9920	**C512_21.0 S4 ME4SA4**	**C512_21.0 S4 MX4SA4**	175	**C512_21.0 P112 BE112M4**	**C512_21.0 P112 BX112M4**	172
73	507	1.0	19.8	4760	**C412_19.8 S4 ME4SA4**	**C412_19.8 S4 MX4SA4**	171	**C412_19.8 P112 BE112M4**	**C412_19.8 P112 BX112M4**	180
73	503	2.7	19.6	13800	**C612_19.6 S4 ME4SA4**	**C612_19.6 S4 MX4SA4**	179	**C612_19.6 P112 BE112M4**	**C612_19.6 P112 BX112M4**	176
76	485	1.7	18.9	9730	**C512_18.9 S4 ME4SA4**	**C512_18.9 S4 MX4SA4**	175	**C512_18.9 P112 BE112M4**	**C512_18.9 P112 BX112M4**	172
81	456	1.1	17.8	4720	**C412_17.8 S4 ME4SA4**	**C412_17.8 S4 MX4SA4**	171	**C412_17.8 P112 BE112M4**	**C412_17.8 P112 BX112M4**	180
82	453	3.0	17.7	13400	**C612_17.7 S4 ME4SA4**	**C612_17.7 S4 MX4SA4**	179	**C612_17.7 P112 BE112M4**	**C612_17.7 P112 BX112M4**	176
87	426	1.9	16.6	9440	**C512_16.6 S4 ME4SA4**	**C512_16.6 S4 MX4SA4**	175	**C512_16.6 P112 BE112M4**	**C512_16.6 P112 BX112M4**	180
90	409	3.3	15.9	13100	**C612_15.9 S4 ME4SA4**	**C612_15.9 S4 MX4SA4**	179	**C612_15.9 P112 BE112M4**	**C612_15.9 P112 BX112M4**	172
91	406	1.1	15.8	4740	**C412_15.8 S4 ME4SA4**	**C412_15.8 S4 MX4SA4**	171	**C412_15.8 P112 BE112M4**	**C412_15.8 P112 BX112M4**	176
96	384	2.1	15.0	9230	**C512_15.0 S4 ME4SA4**	**C512_15.0 S4 MX4SA4**	175	**C512_15.0 P112 BE112M4**	**C512_15.0 P112 BX112M4**	168
98	378	1.0	14.8	3880	**C362_14.8 S4 ME4SA4**	**C362_14.8 S4 MX4SA4**	167	**C362_14.8 P112 BE112M4**	**C362_14.8 P112 BX112M4**	172
101	365	1.2	14.2	4690	**C412_14.2 S4 ME4SA4**	**C412_14.2 S4 MX4SA4**	171	**C412_14.2 P112 BE112M4**	**C412_14.2 P112 BX112M4**	168
108	342	1.1	13.3	3840	**C362_13.3 S4 ME4SA4**	**C362_13.3 S4 MX4SA4**	167	**C362_13.3 P112 BE112M4**	**C362_13.3 P112 BX112M4**	176
110	337	2.2	13.1	8930	**C512_13.1 S4 ME4SA4**	**C512_13.1 S4 MX4SA4**	175	**C512_13.1 P112 BE112M4**	**C512_13.1 P112 BX112M4**	172
116	318	1.3	12.4	4660	**C412_12.4 S4 ME4SA4**	**C412_12.4 S4 MX4SA4**	171	**C412_12.4 P112 BE112M4**	**C412_12.4 P112 BX112M4**	176
122	304	2.5	11.8	8720	**C512_11.8 S4 ME4SA4**	**C512_11.8 S4 MX4SA4**	175	**C512_11.8 P112 BE112M4**	**C512_11.8 P112 BX112M4**	168
123	299	1.3	11.7	3840	**C362_11.7 S4 ME4SA4**	**C362_11.7 S4 MX4SA4**	167	**C362_11.7 P112 BE112M4**	**C362_11.7 P112 BX112M4**	172
129	286	1.5	11.2	4580	**C412_11.2 S4 ME4SA4**	**C412_11.2 S4 MX4SA4**	171	**C412_11.2 P112 BE112M4**	**C412_11.2 P112 BX112M4**	168
136	272	1.4	10.6	3780	**C362_10.6 S4 ME4SA4**	**C362_10.6 S4 MX4SA4**	167	**C362_10.6 P112 BE112M4**	**C362_10.6 P112 BX112M4**	176
148	250	2.7	9.8	8290	**C512_9.8 S4 ME4SA4**	**C512_9.8 S4 MX4SA4**	175	**C512_9.8 P112 BE112M4**	**C512_9.8 P112 BX112M4**	172
150	246	1.6	9.6	4510	**C412_9.6 S4 ME4SA4**	**C412_9.6 S4 MX4SA4**	171	**C412_9.6 P112 BE112M4**	**C412_9.6 P112 BX112M4**	164
155	238	0.9	9.3	3150	**C322_9.3 S4 ME4SA4**	**C322_9.3 S4 MX4SA4**	163	**C322_9.3 P112 BE112M4**	**C322_9.3 P112 BX112M4**	168
164	226	1.7	8.8	3720	**C362_8.8 S4 ME4SA4**	**C362_8.8 S4 MX4SA4**	167	**C362_8.8 P112 BE112M4**	**C362_8.8 P112 BX112M4**	176
164	225	3.0	8.8	8070	**C512_8.8 S4 ME4SA4**	**C512_8.8 S4 MX4SA4**	175	**C512_8.8 P112 BE112M4**	**C512_8.8 P112 BX112M4**	172
167	222	1.7	8.6	4420	**C412_8.6 S4 ME4SA4**	**C412_8.6 S4 MX4SA4**	171	**C412_8.6 P112 BE112M4**	**C412_8.6 P112 BX112M4**	164
170	218	1.0	8.5	3110	**C322_8.5 S4 ME4SA4**	**C322_8.5 S4 MX4SA4**	163	**C322_8.5 P112 BE112M4**	**C322_8.5 P112 BX112M4**	168
179	206	1.8	8.0	3650	**C362_8.0 S4 ME4SA4**	**C362_8.0 S4 MX4SA4**	167	**C362_8.0 P112 BE112M4**	**C362_8.0 P112 BX112M4**	176
186	199	3.2	7.8	7800	**C512_7.8 S4 ME4SA4**	**C512_7.8 S4 MX4SA4**	175	**C512_7.8 P112 BE112M4**	**C512_7.8 P112 BX112M4**	164
186	195	1.4	15.6	3090	**C322_15.6 S4 ME4SA2**		163	**C322_15.6 P112 BE112M2**		164
201	184	1.1	7.2	3070	**C322_7.2 S4 ME4SA4**	**C322_7.2 S4 MX4SA4**	163	**C322_7.2 P112 BE112M4**	**C322_7.2 P112 BX112M4**	172
204	181	2.0	7.1	4280	**C412_7.1 S4 ME4SA4**	**C412_7.1 S4 MX4SA4**	171	**C412_7.1 P112 BE112M4**	**C412_7.1 P112 BX112M4**	164
206	176	1.4	14.1	3040	**C322_14.1 S4 ME4SA2**		163	**C322_14.1 P112 BE112M2**		176
206	179	3.5	7.0	7580	**C512_7.0 S4 ME4SA4**	**C512_7.0 S4 MX4SA4**	175	**C512_7.0 P112 BE112M4**	**C512_7.0 P112 BX112M4**	168
212	174	2.0	6.8	3580	**C362_6.8 S4 ME4SA4**	**C362_6.8 S4 MX4SA4**	167	**C362_6.8 P112 BE112M4**	**C362_6.8 P112 BX112M4**	172
226	163	2.1	6.4	4180	**C412_6.4 S4 ME4SA4**	**C412_6.4 S4 MX4SA4**	171	**C412_6.4 P112 BE112M4**	**C412_6.4 P112 BX112M4**	164
230	161	1.0	6.3	2840	**C322_6.3 S4 ME4SA4**	**C322_6.3 S4 MX4SA4**	163	**C322_6.3 P112 BE112M4**	**C322_6.3 P112 BX112M4**	164
235	154	1.6	12.3	2990	**C322_12.3 S4 ME4SA2**		163	**C322_12.3 P112 BE112M2**		172
242	153	1.7	6.0	3840	**C412_6.0 S4 ME4SA4**	**C412_6.0 S4 MX4SA4**	171	**C412_6.0 P112 BE112M4**	**C412_6.0 P112 BX112M4**	168
246	150	1.3	5.8	3310	**C362_5.8 S4 ME4SA4**	**C362_5.8 S4 MX4SA4**	167	**C362_5.8 P112 BE112M4**	**C362_5.8 P112 BX112M4**	164
255	145	1.1	5.7	2780	**C322_5.7 S4 ME4SA4**	**C322_5.7 S4 MX4SA4**	163	**C322_5.7 P112 BE112M4**	**C322_5.7 P112 BX112M4**	164
259	140	1.6	11.2	2900	**C322_11.2 S4 ME4SA2**		163	**C322_11.2 P112 BE112M2**		168
273	135	1.5	5.3	3200	**C362_5.3 S4 ME4SA4**	**C362_5.3 S4 MX4SA4**	167	**C362_5.3 P112 BE112M4**	**C362_5.3 P112 BX112M4**	164
291	127	1.2	5.0	2760	**C322_5.0 S4 ME4SA4**	**C322_5.0 S4 MX4SA4**	163	**C322_5.0 P112 BE112M4**	**C322_5.0 P112 BX112M4**	160
301	121	1.2	9.6	1680				**C222_9.6 P112 BE112M2**		172
309	120	2.2	4.7	3500	**C412_4.7 S4 ME4SA4**	**C412_4.7 S4 MX4SA4**	171	**C412_4.7 P112 BE112M4**	**C412_4.7 P112 BX112M4**	168
312	119	1.7	4.6	3180	**C362_4.6 S4 ME4SA4**	**C362_4.6 S4 MX4SA4**	167	**C362_4.6 P112 BE112M4**	**C362_4.6 P112 BX112M4**	164
312	116	1.9	9.3	2840	**C322_9.3 S4 ME4SA2**		163	**C322_9.3 P112 BE112M2**		

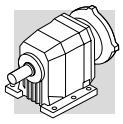

4 kW

n_2 min^{-1}	M_2 Nm	S	i	R_{n2} N	IE2	IE3		IE2	IEC IE3	
320	115	1.3	4.5	2690	**C322_4.5 S4 ME4SA4**	**C322_4.5 S4 MX4SA4**	163	**C322_4.5 P112 BE112M4**	**C322_4.5 P112 BX112M4**	164
335	108	1.3	8.7	1660				**C222_8.7 P112 BE112M2**		160
338	109	0.9	4.3	1300				**C222_4.3 P112 BE112M4**	**C222_4.3 P112 BX112M4**	160
342	106	2.0	8.5	2750	**C322_8.5 S4 ME4SA2**		163	**C322_8.5 P112 BE112M2**		164
343	108	1.9	4.2	3060	**C362_4.2 S4 ME4SA4**	**C362_4.2 S4 MX4SA4**	167	**C362_4.2 P112 BE112M4**	**C362_4.2 P112 BX112M4**	168
386	96	1.6	3.7	2640	**C322_3.7 S4 ME4SA4**	**C322_3.7 S4 MX4SA4**	163	**C322_3.7 P112 BE112M4**	**C322_3.7 P112 BX112M4**	164
388	95	0.9	3.7	1560				**C222_3.7 P112 BE112M4**	**C222_3.7 P112 BX112M4**	160
399	93	2.8	3.6	3180	**C412_3.6 S4 ME4SA4**	**C412_3.6 S4 MX4SA4**	171	**C412_3.6 P112 BE112M4**	**C412_3.6 P112 BX112M4**	172
405	90	2.2	7.2	2690	**C322_7.2 S4 ME4SA2**		163	**C322_7.2 P112 BE112M2**		164
409	89	1.5	7.1	1650				**C222_7.1 P112 BE112M2**		160
413	89	2.2	3.5	3010	**C362_3.5 S4 ME4SA4**	**C362_3.5 S4 MX4SA4**	167	**C362_3.5 P112 BE112M4**	**C362_3.5 P112 BX112M4**	168
422	87	1.6	3.4	2580	**C322_3.4 S4 ME4SA4**	**C322_3.4 S4 MX4SA4**	163	**C322_3.4 P112 BE112M4**	**C322_3.4 P112 BX112M4**	164
433	85	1.0	3.3	1540				**C222_3.3 P112 BE112M4**	**C222_3.3 P112 BX112M4**	160
453	82	2.5	3.2	2890	**C362_3.2 S4 ME4SA4**	**C362_3.2 S4 MX4SA4**	167	**C362_3.2 P112 BE112M4**	**C362_3.2 P112 BX112M4**	168
463	78	2.0	6.3	2530	**C322_6.3 S4 ME4SA2**		163	**C322_6.3 P112 BE112M2**		164
476	76	1.4	6.1	1540				**C222_6.1 P112 BE112M2**		160
500	74	1.8	2.9	2500	**C322_2.9 S4 ME4SA4**	**C322_2.9 S4 MX4SA4**	163	**C322_2.9 P112 BE112M4**	**C322_2.9 P112 BX112M4**	164
519	70	1.5	5.6	1520				**C222_5.6 P112 BE112M2**		160
529	70	1.1	2.7	1530				**C222_2.7 P112 BE112M4**	**C222_2.7 P112 BX112M4**	160
536	69	2.9	2.7	2840	**C362_2.7 S4 ME4SA4**	**C362_2.7 S4 MX4SA4**	167	**C362_2.7 P112 BE112M4**	**C362_2.7 P112 BX112M4**	168
586	62	2.4	5.0	2410	**C322_5.0 S4 ME4SA2**		163	**C322_5.0 P112 BE112M2**		164
608	60	1.7	4.8	1500				**C222_4.8 P112 BE112M2**		160
644	56	2.7	4.5	2330	**C322_4.5 S4 ME4SA2**		163	**C322_4.5 P112 BE112M2**		164
681	53	1.8	4.3	1470				**C222_4.3 P112 BE112M2**		160
776	47	3.2	3.7	2250	**C322_3.7 S4 ME4SA2**		163	**C322_3.7 P112 BE112M2**		164
782	46	1.9	3.7	1450				**C222_3.7 P112 BE112M2**		160
851	43	3.2	3.4	2170	**C322_3.4 S4 ME4SA2**		163	**C322_3.4 P112 BE112M2**		164
872	42	2.0	3.3	1410				**C222_3.3 P112 BE112M2**		160
1007	36	3.6	2.9	2100	**C322_2.9 S4 ME4SA2**		163	**C322_2.9 P112 BE112M2**		164
1065	34	2.3	2.7	1370				**C222_2.7 P112 BE112M2**		160

4 kW

n_2 min^{-1}	M_2 Nm	S	i	R_{n2} N	IE3		IEC IE3	
2.9	12214	1.0	502.6	85000			**C1004_502.6 P112 BXN112M4**	193
3.1	11342	1.1	466.7	85000			**C1004_466.7 P112 BXN112M4**	193
3.5	9957	1.2	409.8	85000			**C1004_409.8 P112 BXN112M4**	193
3.8	9246	1.3	380.5	85000			**C1004_380.5 P112 BXN112M4**	193
4.4	7864	1.5	323.6	85000			**C1004_323.6 P112 BXN112M4**	193
4.8	7302	1.6	300.5	85000			**C1004_300.5 P112 BXN112M4**	193
4.9	7118	1.0	292.9	60000			**C904_292.9 P112 BXN112M4**	190
5.4	6524	1.1	268.5	60000			**C904_268.5 P112 BXN112M4**	190
5.5	6391	1.9	263.0	85000			**C1004_263.0 P112 BXN112M4**	193
5.9	5934	2.0	244.2	85000			**C1004_244.2 P112 BXN112M4**	193
6.2	5630	1.3	231.7	60000			**C904_231.7 P112 BXN112M4**	190
6.8	5161	1.4	212.4	60000			**C904_212.4 P112 BXN112M4**	190
7.2	4851	2.5	199.6	85000			**C1004_199.6 P112 BXN112M4**	193
7.8	4504	2.7	185.4	85000			**C1004_185.4 P112 BXN112M4**	193
8.4	4322	1.7	172.1	60000			**C903_172.1 P112 BXN112M4**	190
8.5	4243	0.9	169.0	35000			**C803_169.0 P112 BXN112M4**	187
9.1	3961	1.8	157.8	60000			**C903_157.8 P112 BXN112M4**	190
9.7	3744	1.1	149.1	35000			**C803_149.1 P112 BXN112M4**	187
9.8	3674	2.0	146.3	60000			**C903_146.3 P112 BXN112M4**	190
10.5	3432	1.2	136.7	35000			**C803_136.7 P112 BXN112M4**	187
10.7	3368	2.1	134.1	60000			**C903_134.1 P112 BXN112M4**	190
12.1	3000	1.3	119.5	35000			**C803_119.5 P112 BXN112M4**	187
12.3	2931	2.5	116.7	60000			**C903_116.7 P112 BXN112M4**	190

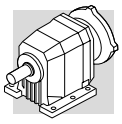

4 kW

n_2 min^{-1}	M_2 Nm	S	i	R_{n2} N	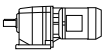 IE3		 IEC IE3	
13.2	2750	1.5	109.5	35000			**C803_109.5 P112 BXN112M4**	187
13.5	2687	2.6	107.0	60000			**C903_107.0 P112 BXN112M4**	190
14.8	2445	1.6	97.4	35000			**C803_97.4 P112 BXN112M4**	187
15.0	2417	3.0	96.2	60000			**C903_96.2 P112 BXN112M4**	190
16.1	2242	1.8	89.3	35000			**C803_89.3 P112 BXN112M4**	187
16.3	2215	1.0	88.2	25000			**C703_88.2 P112 BXN112M4**	184
17.7	2044	1.1	81.4	25000			**C703_81.4 P112 BXN112M4**	184
18.7	1931	2.1	76.9	35000			**C803_76.9 P112 BXN112M4**	187
20.2	1791	1.3	71.3	25000			**C703_71.3 P112 BXN112M4**	184
20.4	1770	2.3	70.5	35000			**C803_70.5 P112 BXN112M4**	187
21.3	1645	1.0	67.7	16000			**C613_67.7 P112 BXN112M4**	180
21.9	1654	1.4	65.9	25000			**C703_65.9 P112 BXN112M4**	184
23.0	1570	2.5	62.5	35000			**C803_62.5 P112 BXN112M4**	187
24.6	1424	1.1	58.6	16000			**C613_58.6 P112 BXN112M4**	180
25.1	1439	2.8	57.3	35000			**C803_57.3 P112 BXN112M4**	187
25.5	1419	1.6	56.5	25000			**C703_56.5 P112 BXN112M4**	184
26.9	1299	1.2	53.5	16000			**C613_53.5 P112 BXN112M4**	180
27.6	1310	1.8	52.2	25000			**C703_52.2 P112 BXN112M4**	184
30	1157	1.4	47.6	16000			**C613_47.6 P112 BXN112M4**	180
30	1191	3.2	47.4	35000			**C803_47.4 P112 BXN112M4**	187
32	1122	2.0	44.7	25000			**C703_44.7 P112 BXN112M4**	184
33	1092	3.5	43.5	35000			**C803_43.5 P112 BXN112M4**	187
33	1056	1.5	43.4	16000			**C613_43.4 P112 BXN112M4**	180
35	1036	2.2	41.3	25000			**C703_41.3 P112 BXN112M4**	184
36	1016	1.0	40.5	10000			**C513_40.5 P112 BXN112M4**	176
38	975	1.4	38.0	16000			**C612_38.0 P112 BXN112M4**	180
39	928	1.1	37.0	10000			**C513_37.0 P112 BXN112M4**	176
40	878	1.8	36.1	15700			**C613_36.1 P112 BXN112M4**	180
41	891	2.4	34.7	23400			**C702_34.7 P112 BXN112M4**	184
42	878	1.4	34.2	15700			**C612_34.2 P112 BXN112M4**	180
44	847	0.9	33.0	10000			**C512_33.0 P112 BXN112M4**	176
44	801	1.9	33.0	15500			**C613_33.0 P112 BXN112M4**	180
47	781	1.7	30.4	15300			**C612_30.4 P112 BXN112M4**	180
48	755	1.3	30.1	9880			**C513_30.1 P112 BXN112M4**	176
48	764	1.0	29.8	10000			**C512_29.8 P112 BXN112M4**	176
52	711	3.0	27.7	22300			**C702_27.7 P112 BXN112M4**	184
52	689	1.4	27.4	9550			**C513_27.4 P112 BXN112M4**	176
53	703	1.9	27.4	14900			**C612_27.4 P112 BXN112M4**	180
54	651	2.2	26.8	14700			**C613_26.8 P112 BXN112M4**	180
56	665	1.2	25.9	10000			**C512_25.9 P112 BXN112M4**	176
58	637	2.1	24.8	14600			**C612_24.8 P112 BXN112M4**	180
60	600	1.5	23.9	9250			**C513_23.9 P112 BXN112M4**	176
62	599	1.3	23.4	10000			**C512_23.4 P112 BXN112M4**	176
64	573	2.4	22.4	14200			**C612_22.4 P112 BXN112M4**	180
69	538	1.5	21.0	9920			**C512_21.0 P112 BXN112M4**	176
73	507	1.0	19.8	4760			**C412_19.8 P112 BXN112M4**	172
73	503	2.7	19.6	13800			**C612_19.6 P112 BXN112M4**	180
76	485	1.7	18.9	9730			**C512_18.9 P112 BXN112M4**	176
81	456	1.1	17.8	4720			**C412_17.8 P112 BXN112M4**	172
82	453	3.0	17.7	13400			**C612_17.7 P112 BXN112M4**	180
87	426	1.9	16.6	9440			**C512_16.6 P112 BXN112M4**	176
90	409	3.3	15.9	13100			**C612_15.9 P112 BXN112M4**	180
91	406	1.1	15.8	4740			**C412_15.8 P112 BXN112M4**	172
96	384	2.1	15.0	9230			**C512_15.0 P112 BXN112M4**	176
98	378	1.0	14.8	3880			**C362_14.8 P112 BXN112M4**	168
101	365	1.2	14.2	4690			**C412_14.2 P112 BXN112M4**	172
108	342	1.1	13.3	3840			**C362_13.3 P112 BXN112M4**	168

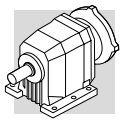

4 kW

n_2 min-1	M_2 Nm	S	i	R_{n2} N	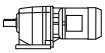 IE3		 IEC IE3	
110	337	2.2	13.1	8930			**C512_13.1 P112 BXN112M4**	176
116	318	1.3	12.4	4660			**C412_12.4 P112 BXN112M4**	172
122	304	2.5	11.8	8720			**C512_11.8 P112 BXN112M4**	176
123	299	1.3	11.7	3840			**C362_11.7 P112 BXN112M4**	168
129	286	1.5	11.2	4580			**C412_11.2 P112 BXN112M4**	172
136	272	1.4	10.6	3780			**C362_10.6 P112 BXN112M4**	168
148	250	2.7	9.8	8290			**C512_9.8 P112 BXN112M4**	176
150	246	1.6	9.6	4510			**C412_9.6 P112 BXN112M4**	172
155	238	0.9	9.3	3150			**C322_9.3 P112 BXN112M4**	164
164	226	1.7	8.8	3720			**C362_8.8 P112 BXN112M4**	168
164	225	3.0	8.8	8070			**C512_8.8 P112 BXN112M4**	176
167	222	1.7	8.6	4420			**C412_8.6 P112 BXN112M4**	172
170	218	1.0	8.5	3110			**C322_8.5 P112 BXN112M4**	164
179	206	1.8	8.0	3650			**C362_8.0 P112 BXN112M4**	168
186	199	3.2	7.8	7800			**C512_7.8 P112 BXN112M4**	176
201	184	1.1	7.2	3070			**C322_7.2 P112 BXN112M4**	164
204	181	2.0	7.1	4280			**C412_7.1 P112 BXN112M4**	172
206	179	3.5	7.0	7580			**C512_7.0 P112 BXN112M4**	176
212	174	2.0	6.8	3580			**C362_6.8 P112 BXN112M4**	168
226	163	2.1	6.4	4180			**C412_6.4 P112 BXN112M4**	172
230	161	1.0	6.3	2840			**C322_6.3 P112 BXN112M4**	164
242	153	1.7	6.0	3840			**C412_6.0 P112 BXN112M4**	172
246	150	1.3	5.8	3310			**C362_5.8 P112 BXN112M4**	168
255	145	1.1	5.7	2780			**C322_5.7 P112 BXN112M4**	164
273	135	1.5	5.3	3200			**C362_5.3 P112 BXN112M4**	168
291	127	1.2	5.0	2760			**C322_5.0 P112 BXN112M4**	164
309	120	2.2	4.7	3500			**C412_4.7 P112 BXN112M4**	172
312	119	1.7	4.6	3180			**C362_4.6 P112 BXN112M4**	168
320	115	1.3	4.5	2690			**C322_4.5 P112 BXN112M4**	164
338	109	0.9	4.3	1300			**C222_4.3 P112 BXN112M4**	160
343	108	1.9	4.2	3060			**C362_4.2 P112 BXN112M4**	168
386	96	1.6	3.7	2640			**C322_3.7 P112 BXN112M4**	164
388	95	0.9	3.7	1560			**C222_3.7 P112 BXN112M4**	160
399	93	2.8	3.6	3180			**C412_3.6 P112 BXN112M4**	172
413	89	2.2	3.5	3010			**C362_3.5 P112 BXN112M4**	168
422	87	1.6	3.4	2580			**C322_3.4 P112 BXN112M4**	164
433	85	1.0	3.3	1540			**C222_3.3 P112 BXN112M4**	160
453	82	2.5	3.2	2890			**C362_3.2 P112 BXN112M4**	168
500	74	1.8	2.9	2500			**C322_2.9 P112 BXN112M4**	164
529	70	1.1	2.7	1530			**C222_2.7 P112 BXN112M4**	160
536	69	2.9	2.7	2840			**C362_2.7 P112 BXN112M4**	168

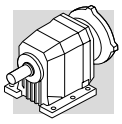

5.5 kW

n_2 min-1	M_2 Nm	S	i	R_{n2} N	IE2	IE3		IEC IE2	IEC IE3	
3.6	13276	0.9	409.8	85000	**C1004_409.8 S4 ME4SB4**	**C1004_409.8 S4 MX4SB4**	192	**C1004_409.8 P132 BE132S4**	**C1004_409.8 P132 BX132SB4**	193
3.8	12328	1.0	380.5	85000	**C1004_380.5 S4 ME4SB4**	**C1004_380.5 S4 MX4SB4**	192	**C1004_380.5 P132 BE132S4**	**C1004_380.5 P132 BX132SB4**	193
4.5	10485	1.1	323.6	85000	**C1004_323.6 S4 ME4SB4**	**C1004_323.6 S4 MX4SB4**	192	**C1004_323.6 P132 BE132S4**	**C1004_323.6 P132 BX132SB4**	193
4.9	9736	1.2	300.5	85000	**C1004_300.5 S4 ME4SB4**	**C1004_300.5 S4 MX4SB4**	192	**C1004_300.5 P132 BE132S4**	**C1004_300.5 P132 BX132SB4**	193
5.6	8521	1.4	263.0	85000	**C1004_263.0 S4 ME4SB4**	**C1004_263.0 S4 MX4SB4**	192	**C1004_263.0 P132 BE132S4**	**C1004_263.0 P132 BX132SB4**	193
6.0	7913	1.5	244.2	85000	**C1004_244.2 S4 ME4SB4**	**C1004_244.2 S4 MX4SB4**	192	**C1004_244.2 P132 BE132S4**	**C1004_244.2 P132 BX132SB4**	193
6.3	7507	1.0	231.7	60000	**C904_231.7 S4 ME4SB4**	**C904_231.7 S4 MX4SB4**	189	**C904_231.7 P132 BE132S4**	**C904_231.7 P132 BX132SB4**	190
6.9	6881	1.0	212.4	60000	**C904_212.4 S4 ME4SB4**	**C904_212.4 S4 MX4SB4**	189	**C904_212.4 P132 BE132S4**	**C904_212.4 P132 BX132SB4**	190
7.3	6468	1.9	199.6	85000	**C1004_199.6 S4 ME4SB4**	**C1004_199.6 S4 MX4SB4**	192	**C1004_199.6 P132 BE132S4**	**C1004_199.6 P132 BX132SB4**	193
7.9	6006	2.0	185.4	85000	**C1004_185.4 S4 ME4SB4**	**C1004_185.4 S4 MX4SB4**	192	**C1004_185.4 P132 BE132S4**	**C1004_185.4 P132 BX132SB4**	193
8.5	5762	1.2	172.1	60000	**C903_172.1 S4 ME4SB4**	**C903_172.1 S4 MX4SB4**	189	**C903_172.1 P132 BE132S4**	**C903_172.1 P132 BX132SB4**	190
9.0	5252	2.3	162.1	85000	**C1004_162.1 S4 ME4SB4**	**C1004_162.1 S4 MX4SB4**	192	**C1004_162.1 P132 BE132S4**	**C1004_162.1 P132 BX132SB4**	193
9.3	5282	1.3	157.8	60000	**C903_157.8 S4 ME4SB4**	**C903_157.8 S4 MX4SB4**	189	**C903_157.8 P132 BE132S4**	**C903_157.8 P132 BX132SB4**	190
9.7	5036	2.4	150.4	85000	**C1003_150.4 S4 ME4SB4**	**C1003_150.4 S4 MX4SB4**	192	**C1003_150.4 P132 BE132S4**	**C1003_150.4 P132 BX132SB4**	193
10.0	4899	1.5	146.3	60000	**C903_146.3 S4 ME4SB4**	**C903_146.3 S4 MX4SB4**	189	**C903_146.3 P132 BE132S4**	**C903_146.3 P132 BX132SB4**	190
10.5	4677	2.4	139.7	85000	**C1003_139.7 S4 ME4SB4**	**C1003_139.7 S4 MX4SB4**	192	**C1003_139.7 P132 BE132S4**	**C1003_139.7 P132 BX132SB4**	193
10.9	4491	1.6	134.1	60000	**C903_134.1 S4 ME4SB4**	**C903_134.1 S4 MX4SB4**	189	**C903_134.1 P132 BE132S4**	**C903_134.1 P132 BX132SB4**	190
12.1	4035	3.0	120.5	85000	**C1003_120.5 S4 ME4SB4**	**C1003_120.5 S4 MX4SB4**	192	**C1003_120.5 P132 BE132S4**	**C1003_120.5 P132 BX132SB4**	193
12.2	3999	1.0	119.5	35000	**C803_119.5 S4 ME4SB4**	**C803_119.5 S4 MX4SB4**	186	**C803_119.5 P132 BE132S4**	**C803_119.5 P132 BX132SB4**	187
12.5	3908	1.8	116.7	60000	**C903_116.7 S4 ME4SB4**	**C903_116.7 S4 MX4SB4**	189	**C903_116.7 P132 BE132S4**	**C903_116.7 P132 BX132SB4**	190
13.3	3666	1.1	109.5	35000	**C803_109.5 S4 ME4SB4**	**C803_109.5 S4 MX4SB4**	186	**C803_109.5 P132 BE132S4**	**C803_109.5 P132 BX132SB4**	187
13.6	3582	2.0	107.0	60000	**C903_107.0 S4 ME4SB4**	**C903_107.0 S4 MX4SB4**	189	**C903_107.0 P132 BE132S4**	**C903_107.0 P132 BX132SB4**	190
15.0	3260	1.2	97.4	35000	**C803_97.4 S4 ME4SB4**	**C803_97.4 S4 MX4SB4**	186	**C803_97.4 P132 BE132S4**	**C803_97.4 P132 BX132SB4**	187
15.2	3222	2.2	96.2	60000	**C903_96.2 S4 ME4SB4**	**C903_96.2 S4 MX4SB4**	189	**C903_96.2 P132 BE132S4**	**C903_96.2 P132 BX132SB4**	190
16.4	2989	1.3	89.3	35000	**C803_89.3 S4 ME4SB4**	**C803_89.3 S4 MX4SB4**	186	**C803_89.3 P132 BE132S4**	**C803_89.3 P132 BX132SB4**	187
16.5	2954	2.4	88.2	60000	**C903_88.2 S4 ME4SB4**	**C903_88.2 S4 MX4SB4**	189	**C903_88.2 P132 BE132S4**	**C903_88.2 P132 BX132SB4**	190
18.0	2719	2.6	81.2	59100	**C903_81.2 S4 ME4SB4**	**C903_81.2 S4 MX4SB4**	189	**C903_81.2 P132 BE132S4**	**C903_81.2 P132 BX132SB4**	190
19.0	2575	1.6	76.9	35000	**C803_76.9 S4 ME4SB4**	**C803_76.9 S4 MX4SB4**	186	**C803_76.9 P132 BE132S4**	**C803_76.9 P132 BX132SB4**	187
19.6	2492	2.8	74.4	58200	**C903_74.4 S4 ME4SB4**	**C903_74.4 S4 MX4SB4**	189	**C903_74.4 P132 BE132S4**	**C903_74.4 P132 BX132SB4**	190
20.5	2388	1.0	71.3	25000	**C703_71.3 S4 ME4SB4**	**C703_71.3 S4 MX4SB4**	183	**C703_71.3 P132 BE132S4**	**C703_71.3 P132 BX132SB4**	184
20.7	2360	1.7	70.5	35000	**C803_70.5 S4 ME4SB4**	**C803_70.5 S4 MX4SB4**	186	**C803_70.5 P132 BE132S4**	**C803_70.5 P132 BX132SB4**	187
22.2	2205	1.0	65.9	25000	**C703_65.9 S4 ME4SB4**	**C703_65.9 S4 MX4SB4**	183	**C703_65.9 P132 BE132S4**	**C703_65.9 P132 BX132SB4**	184
23.4	2093	1.9	62.5	35000	**C803_62.5 S4 ME4SB4**	**C803_62.5 S4 MX4SB4**	186	**C803_62.5 P132 BE132S4**	**C803_62.5 P132 BX132SB4**	187
25.5	1918	2.1	57.3	35000	**C803_57.3 S4 ME4SB4**	**C803_57.3 S4 MX4SB4**	186	**C803_57.3 P132 BE132S4**	**C803_57.3 P132 BX132SB4**	187
25.8	1892	1.2	56.5	25000	**C703_56.5 S4 ME4SB4**	**C703_56.5 S4 MX4SB4**	183	**C703_56.5 P132 BE132S4**	**C703_56.5 P132 BX132SB4**	184
27.3	1732	0.9	53.5	15000	**C613_53.5 S4 ME4SB4**	**C613_53.5 S4 MX4SB4**	179	**C613_53.5 P132 BE132S4**	**C613_53.5 P132 BX132SB4**	180
28.0	1746	1.3	52.2	24700	**C703_52.2 S4 ME4SB4**	**C703_52.2 S4 MX4SB4**	183	**C703_52.2 P132 BE132S4**	**C703_52.2 P132 BX132SB4**	184
31	1543	1.0	47.6	15300	**C613_47.6 S4 ME4SB4**	**C613_47.6 S4 MX4SB4**	179	**C613_47.6 P132 BE132S4**	**C613_47.6 P132 BX132SB4**	180
31	1588	2.4	47.4	35000	**C803_47.4 S4 ME4SB4**	**C803_47.4 S4 MX4SB4**	186	**C803_47.4 P132 BE132S4**	**C803_47.4 P132 BX132SB4**	187
33	1497	1.5	44.7	24100	**C703_44.7 S4 ME4SB4**	**C703_44.7 S4 MX4SB4**	183	**C703_44.7 P132 BE132S4**	**C703_44.7 P132 BX132SB4**	184
34	1456	2.6	43.5	35000	**C803_43.5 S4 ME4SB4**	**C803_43.5 S4 MX4SB4**	186	**C803_43.5 P132 BE132S4**	**C803_43.5 P132 BX132SB4**	187
34	1408	1.1	43.4	15000	**C613_43.4 S4 ME4SB4**	**C613_43.4 S4 MX4SB4**	179	**C613_43.4 P132 BE132S4**	**C613_43.4 P132 BX132SB4**	180
35	1381	1.7	41.3	23800	**C703_41.3 S4 ME4SB4**	**C703_41.3 S4 MX4SB4**	183	**C703_41.3 P132 BE132S4**	**C703_41.3 P132 BX132SB4**	184
37	1338	2.4	39.1	35000	**C802_39.1 S4 ME4SB4**	**C802_39.1 S4 MX4SB4**	186	**C802_39.1 P132 BE132S4**	**C802_39.1 P132 BX132SB4**	187
38	1300	1.0	38.0	14800	**C612_38.0 S4 ME4SB4**	**C612_38.0 S4 MX4SB4**	179	**C612_38.0 P132 BE132S4**	**C612_38.0 P132 BX132SB4**	180
40	1171	1.3	36.1	14800	**C613_36.1 S4 ME4SB4**	**C613_36.1 S4 MX4SB4**	179	**C613_36.1 P132 BE132S4**	**C613_36.1 P132 BX132SB4**	180
42	1188	1.8	34.7	22100	**C702_34.7 S4 ME4SB4**	**C702_34.7 S4 MX4SB4**	183	**C702_34.7 P132 BE132S4**	**C702_34.7 P132 BX132SB4**	184
43	1170	1.0	34.2	14500	**C612_34.2 S4 ME4SB4**	**C612_34.2 S4 MX4SB4**	179	**C612_34.2 P132 BE132S4**	**C612_34.2 P132 BX132SB4**	180
44	1068	1.4	33.0	14500	**C613_33.0 S4 ME4SB4**	**C613_33.0 S4 MX4SB4**	179	**C613_33.0 P132 BE132S4**	**C613_33.0 P132 BX132SB4**	180
47	1072	3.5	31.3	33400	**C802_31.3 S4 ME4SB4**	**C802_31.3 S4 MX4SB4**	186	**C802_31.3 P132 BE132S4**	**C802_31.3 P132 BX132SB4**	187

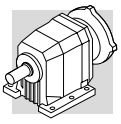

5.5 kW

n_2	M_2	S	i	R_{n2}	IE2	IE3		IEC IE2	IEC IE3	
min-1	Nm			N						
48	1041	1.3	30.4	14300	**C612_30.4 S4 ME4SB4**	**C612_30.4 S4 MX4SB4**	179	**C612_30.4 P132 BE132S4**	**C612_30.4 P132 BX132SB4**	180
49	1006	1.0	30.1	9610	**C513_30.1 S4 ME4SB4**	**C513_30.1 S4 MX4SB4**	175	**C513_30.1 P132 BE132S4**	**C513_30.1 P132 BX132SB4**	176
53	948	2.2	27.7	21200	**C702_27.7 S4 ME4SB4**	**C702_27.7 S4 MX4SB4**	183	**C702_27.7 P132 BE132S4**	**C702_27.7 P132 BX132SB4**	184
53	919	1.1	27.4	9490	**C513_27.4 S4 ME4SB4**	**C513_27.4 S4 MX4SB4**	175	**C513_27.4 P132 BE132S4**	**C513_27.4 P132 BX132SB4**	176
53	938	1.4	27.4	13900	**C612_27.4 S4 ME4SB4**	**C612_27.4 S4 MX4SB4**	179	**C612_27.4 P132 BE132S4**	**C612_27.4 P132 BX132SB4**	180
56	886	0.9	25.9	9350	**C512_25.9 S4 ME4SB4**	**C512_25.9 S4 MX4SB4**	175	**C512_25.9 P132 BE132S4**	**C512_25.9 P132 BX132SB4**	176
59	849	1.6	24.8	13700	**C612_24.8 S4 ME4SB4**	**C612_24.8 S4 MX4SB4**	179	**C612_24.8 P132 BE132S4**	**C612_24.8 P132 BX132SB4**	180
61	800	1.2	23.9	9540	**C513_23.9 S4 ME4SB4**	**C513_23.9 S4 MX4SB4**	175	**C513_23.9 P132 BE132S4**	**C513_23.9 P132 BX132SB4**	176
63	799	1.0	23.4	9310	**C512_23.4 S4 ME4SB4**	**C512_23.4 S4 MX4SB4**	175	**C512_23.4 P132 BE132S4**	**C512_23.4 P132 BX132SB4**	176
64	782	2.7	22.9	20400	**C702_22.9 S4 ME4SB4**	**C702_22.9 S4 MX4SB4**	183	**C702_22.9 P132 BE132S4**	**C702_22.9 P132 BX132SB4**	184
65	764	1.8	22.4	13400	**C612_22.4 S4 ME4SB4**	**C612_22.4 S4 MX4SB4**	179	**C612_22.4 P132 BE132S4**	**C612_22.4 P132 BX132SB4**	180
70	717	1.1	21.0	9150	**C512_21.0 S4 ME4SB4**	**C512_21.0 S4 MX4SB4**	175	**C512_21.0 P132 BE132S4**	**C512_21.0 P132 BX132SB4**	176
74	670	2.0	19.6	13100	**C612_19.6 S4 ME4SB4**	**C612_19.6 S4 MX4SB4**	179	**C612_19.6 P132 BE132S4**	**C612_19.6 P132 BX132SB4**	180
76	660	3.2	19.3	19700	**C702_19.3 S4 ME4SB4**	**C702_19.3 S4 MX4SB4**	183	**C702_19.3 P132 BE132S4**	**C702_19.3 P132 BX132SB4**	184
77	646	1.2	18.9	9030	**C512_18.9 S4 ME4SB4**	**C512_18.9 S4 MX4SB4**	175	**C512_18.9 P132 BE132S4**	**C512_18.9 P132 BX132SB4**	176
83	604	2.2	17.7	12700	**C612_17.7 S4 ME4SB4**	**C612_17.7 S4 MX4SB4**	179	**C612_17.7 P132 BE132S4**	**C612_17.7 P132 BX132SB4**	180
88	568	1.4	16.6	8810	**C512_16.6 S4 ME4SB4**	**C512_16.6 S4 MX4SB4**	175	**C512_16.6 P132 BE132S4**	**C512_16.6 P132 BX132SB4**	176
92	545	2.5	15.9	12500	**C612_15.9 S4 ME4SB4**	**C612_15.9 S4 MX4SB4**	179	**C612_15.9 P132 BE132S4**	**C612_15.9 P132 BX132SB4**	180
98	512	1.6	15.0	8660	**C512_15.0 S4 ME4SB4**	**C512_15.0 S4 MX4SB4**	175	**C512_15.0 P132 BE132S4**	**C512_15.0 P132 BX132SB4**	176
102	491	2.8	14.3	12100	**C612_14.3 S4 ME4SB4**	**C612_14.3 S4 MX4SB4**	179	**C612_14.3 P132 BE132S4**	**C612_14.3 P132 BX132SB4**	180
102	487	0.9	14.2	4000	**C412_14.2 S4 ME4SB4**	**C412_14.2 S4 MX4SB4**	171	**C412_14.2 P132 BE132S4**	**C412_14.2 P132 BX132SB4**	172
111	449	1.7	13.1	8420	**C512_13.1 S4 ME4SB4**	**C512_13.1 S4 MX4SB4**	175	**C512_13.1 P132 BE132S4**	**C512_13.1 P132 BX132SB4**	176
118	424	1.0	12.4	4060	**C412_12.4 S4 ME4SB4**	**C412_12.4 S4 MX4SB4**	171	**C412_12.4 P132 BE132S4**	**C412_12.4 P132 BX132SB4**	172
121	414	3.3	12.1	11600	**C612_12.1 S4 ME4SB4**	**C612_12.1 S4 MX4SB4**	179	**C612_12.1 P132 BE132S4**	**C612_12.1 P132 BX132SB4**	180
123	405	1.9	11.8	8250	**C512_11.8 S4 ME4SB4**	**C512_11.8 S4 MX4SB4**	175	**C512_11.8 P132 BE132S4**	**C512_11.8 P132 BX132SB4**	176
125	399	1.0	11.7	3380	**C362_11.7 S4 ME4SB4**	**C362_11.7 S4 MX4SB4**	167	**C362_11.7 P132 BE132S4**	**C362_11.7 P132 BX132SB4**	168
131	382	1.1	11.2	4030	**C412_11.2 S4 ME4SB4**	**C412_11.2 S4 MX4SB4**	171	**C412_11.2 P132 BE132S4**	**C412_11.2 P132 BX132SB4**	172
138	363	1.0	10.6	3350	**C362_10.6 S4 ME4SB4**	**C362_10.6 S4 MX4SB4**	167	**C362_10.6 P132 BE132S4**	**C362_10.6 P132 BX132SB4**	168
150	334	2.1	9.8	7890	**C512_9.8 S4 ME4SB4**	**C512_9.8 S4 MX4SB4**	175	**C512_9.8 P132 BE132S4**	**C512_9.8 P132 BX132SB4**	176
152	328	1.2	9.6	4030	**C412_9.6 S4 ME4SB4**	**C412_9.6 S4 MX4SB4**	171	**C412_9.6 P132 BE132S4**	**C412_9.6 P132 BX132SB4**	172
166	301	1.3	8.8	3350	**C362_8.8 S4 ME4SB4**	**C362_8.8 S4 MX4SB4**	167	**C362_8.8 P132 BE132S4**	**C362_8.8 P132 BX132SB4**	168
166	301	2.3	8.8	7700	**C512_8.8 S4 ME4SB4**	**C512_8.8 S4 MX4SB4**	175	**C512_8.8 P132 BE132S4**	**C512_8.8 P132 BX132SB4**	176
182	275	1.3	8.0	3330	**C362_8.0 S4 ME4SB4**	**C362_8.0 S4 MX4SB4**	167	**C362_8.0 P132 BE132S4**	**C362_8.0 P132 BX132SB4**	168
188	265	2.4	7.8	7460	**C512_7.8 S4 ME4SB4**	**C512_7.8 S4 MX4SB4**	175	**C512_7.8 P132 BE132S4**	**C512_7.8 P132 BX132SB4**	176
207	242	1.5	7.1	3920	**C412_7.1 S4 ME4SB4**	**C412_7.1 S4 MX4SB4**	171	**C412_7.1 P132 BE132S4**	**C412_7.1 P132 BX132SB4**	172
209	239	2.6	7.0	7280	**C512_7.0 S4 ME4SB4**	**C512_7.0 S4 MX4SB4**	175	**C512_7.0 P132 BE132S4**	**C512_7.0 P132 BX132SB4**	176
215	232	1.5	6.8	3280	**C362_6.8 S4 ME4SB4**	**C362_6.8 S4 MX4SB4**	167	**C362_6.8 P132 BE132S4**	**C362_6.8 P132 BX132SB4**	168
229	218	1.6	6.4	3840	**C412_6.4 S4 ME4SB4**	**C412_6.4 S4 MX4SB4**	171	**C412_6.4 P132 BE132S4**	**C412_6.4 P132 BX132SB4**	172
243	205	3.2	6.0	9480	**C612_6.0 S4 ME4SB4**	**C612_6.0 S4 MX4SB4**	179	**C612_6.0 P132 BE132S4**	**C612_6.0 P132 BX132SB4**	180
245	204	1.3	6.0	3430	**C412_6.0 S4 ME4SB4**	**C412_6.0 S4 MX4SB4**	171	**C412_6.0 P132 BE132S4**	**C412_6.0 P132 BX132SB4**	172
250	200	1.0	5.8	3020	**C362_5.8 S4 ME4SB4**	**C362_5.8 S4 MX4SB4**	167	**C362_5.8 P132 BE132S4**	**C362_5.8 P132 BX132SB4**	168
259	193	2.3	5.6	6720	**C512_5.6 S4 ME4SB4**	**C512_5.6 S4 MX4SB4**	175	**C512_5.6 P132 BE132S4**	**C512_5.6 P132 BX132SB4**	176
262	190	2.2	11.2	3770	**C412_11.2 S4 ME4SB2**		171	**C412_11.2 P132 BE132SA2**		172
277	181	1.1	5.3	2930	**C362_5.3 S4 ME4SB4**	**C362_5.3 S4 MX4SB4**	167	**C362_5.3 P132 BE132S4**	**C362_5.3 P132 BX132SB4**	168
292	171	2.5	3.3	6530	**C512_3.3 S5 ME5SA6**		175	**C512_3.3 P160 BE160MA6**		176
295	169	0.9	5.0	2480	**C322_5.0 S4 ME4SB4**	**C322_5.0 S4 MX4SB4**	163	**C322_5.0 P132 BE132S4**	**C322_5.0 P132 BX132SB4**	164
305	164	2.4	9.6	3680	**C412_9.6 S4 ME4SB2**		171	**C412_9.6 P132 BE132SA2**		172
313	159	1.6	4.7	3360	**C412_4.7 S4 ME4SB4**	**C412_4.7 S4 MX4SB4**	171	**C412_4.7 P132 BE132S4**	**C412_4.7 P132 BX132SB4**	172
316	158	1.3	4.6	2860	**C362_4.6 S4 ME4SB4**	**C362_4.6 S4 MX4SB4**	167	**C362_4.6 P132 BE132S4**	**C362_4.6 P132 BX132SB4**	168
324	154	1.0	4.5	2500	**C322_4.5 S4 ME4SB4**	**C322_4.5 S4 MX4SB4**	163	**C322_4.5 P132 BE132S4**	**C322_4.5 P132 BX132SB4**	164

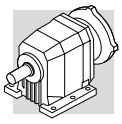

5.5 kW

n_2 min-1	M_2 Nm	S	i	R_{n2} N	IE2	IE3		IE2	IEC IE3	
328	152	2.9	4.5	6330	**C512_4.5 S4 ME4SB4**	**C512_4.5 S4 MX4SB4**	175	**C512_4.5 P132 BE132S4**	**C512_4.5 P132 BX132SB4**	176
338	147	2.6	8.6	3600	**C412_8.6 S4 ME4SB2**		171	**C412_8.6 P132 BE132SA2**		172
348	144	1.4	4.2	2830	**C362_4.2 S4 ME4SB4**	**C362_4.2 S4 MX4SB4**	167	**C362_4.2 P132 BE132S4**	**C362_4.2 P132 BX132SB4**	168
364	137	2.7	8.0	2850	**C362_8.0 S4 ME4SB2**		167	**C362_8.0 P132 BE132SA2**		168
367	136	2.9	2.6	6150	**C512_2.6 S5 ME5SA6**		175	**C512_2.6 P160 BE160MA6**		176
391	128	1.2	3.7	2410	**C322_3.7 S4 ME4SB4**	**C322_3.7 S4 MX4SB4**	163	**C322_3.7 P132 BE132S4**	**C322_3.7 P132 BX132SB4**	164
404	123	2.1	3.6	3240	**C412_3.6 S4 ME4SB4**	**C412_3.6 S4 MX4SB4**	171	**C412_3.6 P132 BE132S4**	**C412_3.6 P132 BX132SB4**	172
414	121	2.9	7.1	3460	**C412_7.1 S4 ME4SB2**		171	**C412_7.1 P132 BE132SA2**		172
419	119	1.7	3.5	2750	**C362_3.5 S4 ME4SB4**	**C362_3.5 S4 MX4SB4**	167	**C362_3.5 P132 BE132S4**	**C362_3.5 P132 BX132SB4**	168
428	117	1.2	3.4	2370	**C322_3.4 S4 ME4SB4**	**C322_3.4 S4 MX4SB4**	163	**C322_3.4 P132 BE132S4**	**C322_3.4 P132 BX132SB4**	164
431	116	3.1	6.8	2750	**C362_6.8 S4 ME4SB2**		167	**C362_6.8 P132 BE132SA2**		168
459	109	1.8	3.2	2700	**C362_3.2 S4 ME4SB4**	**C362_3.2 S4 MX4SB4**	167	**C362_3.2 P132 BE132S4**	**C362_3.2 P132 BX132SB4**	168
460	109	3.2	6.4	3370	**C412_6.4 S4 ME4SB2**		171	**C412_6.4 P132 BE132SA2**		172
491	102	2.6	6.0	3140	**C412_6.0 S4 ME4SB2**		171	**C412_6.0 P132 BE132SA2**		172
500	100	2.0	5.8	2620	**C362_5.8 S4 ME4SB2**		167	**C362_5.8 P132 BE132SA2**		168
507	98	1.3	2.9	2310	**C322_2.9 S4 ME4SB4**	**C322_2.9 S4 MX4SB4**	163	**C322_2.9 P132 BE132S4**	**C322_2.9 P132 BX132SB4**	164
543	92	2.2	2.7	2620	**C362_2.7 S4 ME4SB4**	**C362_2.7 S4 MX4SB4**	167	**C362_2.7 P132 BE132S4**	**C362_2.7 P132 BX132SB4**	168
549	91	2.7	2.7	3070	**C412_2.7 S4 ME4SB4**	**C412_2.7 S4 MX4SB4**	171	**C412_2.7 P132 BE132S4**	**C412_2.7 P132 BX132SB4**	172
554	90	2.2	5.3	2550	**C362_5.3 S4 ME4SB2**		167	**C362_5.3 P132 BE132SA2**		168
591	84	1.8	5.0	2230	**C322_5.0 S4 ME4SB2**		163	**C322_5.0 P132 BE132SA2**		164
627	80	3.3	4.7	2990	**C412_4.7 S4 ME4SB2**		171	**C412_4.7 P132 BE132SA2**		172
650	77	2.0	4.5	2190	**C322_4.5 S4 ME4SB2**		163	**C322_4.5 P132 BE132SA2**		164
783	64	2.4	3.7	2120	**C322_3.7 S4 ME4SB2**		163	**C322_3.7 P132 BE132SA2**		164
858	58	2.4	3.4	2080	**C322_3.4 S4 ME4SB2**		163	**C322_3.4 P132 BE132SA2**		164
1016	49	2.6	2.9	2000	**C322_2.9 S4 ME4SB2**		163	**C322_2.9 P132 BE132SA2**		164

5.5 kW

n_2 min-1	M_2 Nm	S	i	R_{n2} N	IE3		IEC IE3	
3.6	13276	0.9	409.8	85000			**C1004_409.8 P132 BXN132S4**	193
3.8	12328	1.0	380.5	85000			**C1004_380.5 P132 BXN132S4**	193
4.5	10485	1.1	323.6	85000			**C1004_323.6 P132 BXN132S4**	193
4.9	9736	1.2	300.5	85000			**C1004_300.5 P132 BXN132S4**	193
5.6	8521	1.4	263.0	85000			**C1004_263.0 P132 BXN132S4**	193
6.0	7913	1.5	244.2	85000			**C1004_244.2 P132 BXN132S4**	193
6.3	7507	1.0	231.7	60000			**C904_231.7 P132 BXN132S4**	190
6.9	6881	1.0	212.4	60000			**C904_212.4 P132 BXN132S4**	190
7.3	6468	1.9	199.6	85000			**C1004_199.6 P132 BXN132S4**	193
7.9	6006	2.0	185.4	85000			**C1004_185.4 P132 BXN132S4**	193
8.5	5762	1.2	172.1	60000			**C903_172.1 P132 BXN132S4**	190
9.0	5252	2.3	162.1	85000			**C1004_162.1 P132 BXN132S4**	193
9.3	5282	1.3	157.8	60000			**C903_157.8 P132 BXN132S4**	190
9.7	5036	2.4	150.4	85000			**C1003_150.4 P132 BXN132S4**	193
10.0	4899	1.5	146.3	60000			**C903_146.3 P132 BXN132S4**	190
10.5	4677	2.4	139.7	85000			**C1003_139.7 P132 BXN132S4**	193
10.9	4491	1.6	134.1	60000			**C903_134.1 P132 BXN132S4**	190
12.1	4035	3.0	120.5	85000			**C1003_120.5 P132 BXN132S4**	193
12.2	3999	1.0	119.5	35000			**C803_119.5 P132 BXN132S4**	187
12.5	3908	1.8	116.7	60000			**C903_116.7 P132 BXN132S4**	190
13.3	3666	1.1	109.5	35000			**C803_109.5 P132 BXN132S4**	187

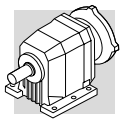

5.5 kW

n_2 min-1	M_2 Nm	S	i	R_{n2} N	IE3		IEC IE3	
13.6	3582	2.0	107.0	60000			**C903_107.0 P132 BXN132S4**	190
15.0	3260	1.2	97.4	35000			**C803_97.4 P132 BXN132S4**	187
15.2	3222	2.2	96.2	60000			**C903_96.2 P132 BXN132S4**	190
16.4	2989	1.3	89.3	35000			**C803_89.3 P132 BXN132S4**	187
16.5	2954	2.4	88.2	60000			**C903_88.2 P132 BXN132S4**	190
18.0	2719	2.6	81.2	59100			**C903_81.2 P132 BXN132S4**	190
19.0	2575	1.6	76.9	35000			**C803_76.9 P132 BXN132S4**	187
19.6	2492	2.8	74.4	58200			**C903_74.4 P132 BXN132S4**	190
20.5	2388	1.0	71.3	25000			**C703_71.3 P132 BXN132S4**	184
20.7	2360	1.7	70.5	35000			**C803_70.5 P132 BXN132S4**	187
22.2	2205	1.0	65.9	25000			**C703_65.9 P132 BXN132S4**	184
23.4	2093	1.9	62.5	35000			**C803_62.5 P132 BXN132S4**	187
25.5	1918	2.1	57.3	35000			**C803_57.3 P132 BXN132S4**	187
25.8	1892	1.2	56.5	25000			**C703_56.5 P132 BXN132S4**	184
27.3	1732	0.9	53.5	15000			**C613_53.5 P132 BXN132S4**	180
28.0	1746	1.3	52.2	24700			**C703_52.2 P132 BXN132S4**	184
31	1543	1.0	47.6	15300			**C613_47.6 P132 BXN132S4**	180
31	1588	2.4	47.4	35000			**C803_47.4 P132 BXN132S4**	187
33	1497	1.5	44.7	24100			**C703_44.7 P132 BXN132S4**	184
34	1456	2.6	43.5	35000			**C803_43.5 P132 BXN132S4**	187
34	1408	1.1	43.4	15000			**C613_43.4 P132 BXN132S4**	180
35	1381	1.7	41.3	23800			**C703_41.3 P132 BXN132S4**	184
37	1338	2.4	39.1	35000			**C802_39.1 P132 BXN132S4**	187
38	1300	1.0	38.0	14800			**C612_38.0 P132 BXN132S4**	180
40	1171	1.3	36.1	14800			**C613_36.1 P132 BXN132S4**	180
42	1188	1.8	34.7	22100			**C702_34.7 P132 BXN132S4**	184
43	1170	1.0	34.2	14500			**C612_34.2 P132 BXN132S4**	180
44	1068	1.4	33.0	14500			**C613_33.0 P132 BXN132S4**	180
47	1072	3.5	31.3	33400			**C802_31.3 P132 BXN132S4**	187
48	1041	1.3	30.4	14300			**C612_30.4 P132 BXN132S4**	180
49	1006	1.0	30.1	9610			**C513_30.1 P132 BXN132S4**	176
53	948	2.2	27.7	21200			**C702_27.7 P132 BXN132S4**	184
53	919	1.1	27.4	9490			**C513_27.4 P132 BXN132S4**	176
53	938	1.4	27.4	13900			**C612_27.4 P132 BXN132S4**	180
56	886	0.9	25.9	9350			**C512_25.9 P132 BXN132S4**	176
59	849	1.6	24.8	13700			**C612_24.8 P132 BXN132S4**	180
61	800	1.2	23.9	9540			**C513_23.9 P132 BXN132S4**	176
63	799	1.0	23.4	9310			**C512_23.4 P132 BXN132S4**	176
64	782	2.7	22.9	20400			**C702_22.9 P132 BXN132S4**	184
65	764	1.8	22.4	13400			**C612_22.4 P132 BXN132S4**	180
70	717	1.1	21.0	9150			**C512_21.0 P132 BXN132S4**	176
74	670	2.0	19.6	13100			**C612_19.6 P132 BXN132S4**	180
76	660	3.2	19.3	19700			**C702_19.3 P132 BXN132S4**	184
77	646	1.2	18.9	9030			**C512_18.9 P132 BXN132S4**	176
83	604	2.2	17.7	12700			**C612_17.7 P132 BXN132S4**	180
88	568	1.4	16.6	8810			**C512_16.6 P132 BXN132S4**	176
92	545	2.5	15.9	12500			**C612_15.9 P132 BXN132S4**	180
98	512	1.6	15.0	8660			**C512_15.0 P132 BXN132S4**	176
102	491	2.8	14.3	12100			**C612_14.3 P132 BXN132S4**	180
102	487	0.9	14.2	4000			**C412_14.2 P132 BXN132S4**	172
111	449	1.7	13.1	8420			**C512_13.1 P132 BXN132S4**	176
118	424	1.0	12.4	4060			**C412_12.4 P132 BXN132S4**	172
121	414	3.3	12.1	11600			**C612_12.1 P132 BXN132S4**	180
123	405	1.9	11.8	8250			**C512_11.8 P132 BXN132S4**	176
125	399	1.0	11.7	3380			**C362_11.7 P132 BXN132S4**	168
131	382	1.1	11.2	4030			**C412_11.2 P132 BXN132S4**	172
138	363	1.0	10.6	3350			**C362_10.6 P132 BXN132S4**	168

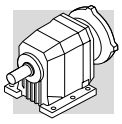

5.5 kW

n_2 min-1	M_2 Nm	S	i	R_{n2} N	IE3		IEC IE3	
150	334	2.1	9.8	7890			**C512_9.8 P132 BXN132S4**	176
152	328	1.2	9.6	4030			**C412_9.6 P132 BXN132S4**	172
166	301	1.3	8.8	3350			**C362_8.8 P132 BXN132S4**	168
166	301	2.3	8.8	7700			**C512_8.8 P132 BXN132S4**	176
182	275	1.3	8.0	3330			**C362_8.0 P132 BXN132S4**	168
188	265	2.4	7.8	7460			**C512_7.8 P132 BXN132S4**	176
207	242	1.5	7.1	3920			**C412_7.1 P132 BXN132S4**	172
209	239	2.6	7.0	7280			**C512_7.0 P132 BXN132S4**	176
215	232	1.5	6.8	3280			**C362_6.8 P132 BXN132S4**	168
229	218	1.6	6.4	3840			**C412_6.4 P132 BXN132S4**	172
243	205	3.2	6.0	9480			**C612_6.0 P132 BXN132S4**	180
245	204	1.3	6.0	3430			**C412_6.0 P132 BXN132S4**	172
250	200	1.0	5.8	3020			**C362_5.8 P132 BXN132S4**	168
259	193	2.3	5.6	6720			**C512_5.6 P132 BXN132S4**	176
277	181	1.1	5.3	2930			**C362_5.3 P132 BXN132S4**	168
295	169	0.9	5.0	2480			**C322_5.0 P132 BXN132S4**	164
313	159	1.6	4.7	3360			**C412_4.7 P132 BXN132S4**	172
316	158	1.3	4.6	2860			**C362_4.6 P132 BXN132S4**	168
324	154	1.0	4.5	2500			**C322_4.5 P132 BXN132S4**	164
328	152	2.9	4.5	6330			**C512_4.5 P132 BXN132S4**	176
348	144	1.4	4.2	2830			**C362_4.2 P132 BXN132S4**	168
391	128	1.2	3.7	2410			**C322_3.7 P132 BXN132S4**	164
404	123	2.1	3.6	3240			**C412_3.6 P132 BXN132S4**	172
419	119	1.7	3.5	2750			**C362_3.5 P132 BXN132S4**	168
428	117	1.2	3.4	2370			**C322_3.4 P132 BXN132S4**	164
459	109	1.8	3.2	2700			**C362_3.2 P132 BXN132S4**	168
507	98	1.3	2.9	2310			**C322_2.9 P132 BXN132S4**	164
543	92	2.2	2.7	2620			**C362_2.7 P132 BXN132S4**	168
549	91	2.7	2.7	3070			**C412_2.7 P132 BXN132S4**	172

7.5 kW

n_2 min-1	M_2 Nm	S	i	R_{n2} N	IE2	IE3		IEC IE2	IEC IE3	
4.8	13252	0.9	300.5	85000	**C1004_300.5 S4 ME4LA4**	**C1004_300.5 S4 MX4LA4**	192	**C1004_300.5 P132 BE132MA4**	**C1004_300.5 P132 BX132MA4**	193
5.5	11598	1.0	263.0	85000	**C1004_263.0 S4 ME4LA4**	**C1004_263.0 S4 MX4LA4**	192	**C1004_263.0 P132 BE132MA4**	**C1004_263.0 P132 BX132MA4**	193
6.0	10770	1.1	244.2	85000	**C1004_244.2 S4 ME4LA4**	**C1004_244.2 S4 MX4LA4**	192	**C1004_244.2 P132 BE132MA4**	**C1004_244.2 P132 BX132MA4**	193
7.3	8804	1.4	199.6	85000	**C1004_199.6 S4 ME4LA4**	**C1004_199.6 S4 MX4LA4**	192	**C1004_199.6 P132 BE132MA4**	**C1004_199.6 P132 BX132MA4**	193
7.8	8175	1.5	185.4	85000	**C1004_185.4 S4 ME4LA4**	**C1004_185.4 S4 MX4LA4**	192	**C1004_185.4 P132 BE132MA4**	**C1004_185.4 P132 BX132MA4**	193
8.5	7843	0.9	172.1	60000	**C903_172.1 S4 ME4LA4**	**C903_172.1 S4 MX4LA4**	189	**C903_172.1 P132 BE132MA4**	**C903_172.1 P132 BX132MA4**	190
9.0	7149	1.7	162.1	85000	**C1004_162.1 S4 ME4LA4**	**C1004_162.1 S4 MX4LA4**	192	**C1004_162.1 P132 BE132MA4**	**C1004_162.1 P132 BX132MA4**	193
9.2	7189	1.0	157.8	60000	**C903_157.8 S4 ME4LA4**	**C903_157.8 S4 MX4LA4**	189	**C903_157.8 P132 BE132MA4**	**C903_157.8 P132 BX132MA4**	190
9.7	6855	1.8	150.4	85000	**C1003_150.4 S4 ME4LA4**	**C1003_150.4 S4 MX4LA4**	192	**C1003_150.4 P132 BE132MA4**	**C1003_150.4 P132 BX132MA4**	193
9.9	6668	1.1	146.3	59600	**C903_146.3 S4 ME4LA4**	**C903_146.3 S4 MX4LA4**	189	**C903_146.3 P132 BE132MA4**	**C903_146.3 P132 BX132MA4**	190
10.4	6365	1.7	139.7	85000	**C1003_139.7 S4 ME4LA4**	**C1003_139.7 S4 MX4LA4**	192	**C1003_139.7 P132 BE132MA4**	**C1003_139.7 P132 BX132MA4**	193
10.8	6113	1.2	134.1	59400	**C903_134.1 S4 ME4LA4**	**C903_134.1 S4 MX4LA4**	189	**C903_134.1 P132 BE132MA4**	**C903_134.1 P132 BX132MA4**	190
12.1	5492	2.2	120.5	85000	**C1003_120.5 S4 ME4LA4**	**C1003_120.5 S4 MX4LA4**	192	**C1003_120.5 P132 BE132MA4**	**C1003_120.5 P132 BX132MA4**	193
12.5	5319	1.4	116.7	58600	**C903_116.7 S4 ME4LA4**	**C903_116.7 S4 MX4LA4**	189	**C903_116.7 P132 BE132MA4**	**C903_116.7 P132 BX132MA4**	190
13.0	5100	2.4	111.9	85000	**C1003_111.9 S4 ME4LA4**	**C1003_111.9 S4 MX4LA4**	192	**C1003_111.9 P132 BE132MA4**	**C1003_111.9 P132 BX132MA4**	193

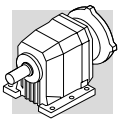

7.5 kW

n_2	M_2	S	i	R_{n2}	IE2	IE3		IEC IE2	IEC IE3	
min-1	Nm			N						
13.6	4876	1.5	107.0	58200	**C903_107.0 S4 ME4LA4**	**C903_107.0 S4 MX4LA4**	189	**C903_107.0 P132 BE132MA4**	**C903_107.0 P132 BX132MA4**	190
14.6	4548	2.6	99.8	85000	**C1003_99.8 S4 ME4LA4**	**C1003_99.8 S4 MX4LA4**	192	**C1003_99.8 P132 BE132MA4**	**C1003_99.8 P132 BX132MA4**	193
14.9	4438	0.9	97.4	34500	**C803_97.4 S4 ME4LA4**	**C803_97.4 S4 MX4LA4**	186	**C803_97.4 P132 BE132MA4**	**C803_97.4 P132 BX132MA4**	187
15.1	4386	1.6	96.2	57500	**C903_96.2 S4 ME4LA4**	**C903_96.2 S4 MX4LA4**	189	**C903_96.2 P132 BE132MA4**	**C903_96.2 P132 BX132MA4**	190
15.7	4223	2.8	92.7	85000	**C1003_92.7 S4 ME4LA4**	**C1003_92.7 S4 MX4LA4**	192	**C1003_92.7 P132 BE132MA4**	**C1003_92.7 P132 BX132MA4**	193
16.3	4068	1.0	89.3	35000	**C803_89.3 S4 ME4LA4**	**C803_89.3 S4 MX4LA4**	186	**C803_89.3 P132 BE132MA4**	**C803_89.3 P132 BX132MA4**	187
16.5	4020	1.8	88.2	56600	**C903_88.2 S4 ME4LA4**	**C903_88.2 S4 MX4LA4**	189	**C903_88.2 P132 BE132MA4**	**C903_88.2 P132 BX132MA4**	190
17.0	3899	3.1	85.6	85000	**C1003_85.6 S4 ME4LA4**	**C1003_85.6 S4 MX4LA4**	192	**C1003_85.6 P132 BE132MA4**	**C1003_85.6 P132 BX132MA4**	193
17.9	3701	1.9	81.2	56100	**C903_81.2 S4 ME4LA4**	**C903_81.2 S4 MX4LA4**	189	**C903_81.2 P132 BE132MA4**	**C903_81.2 P132 BX132MA4**	190
18.9	3505	1.1	76.9	35000	**C803_76.9 S4 ME4LA4**	**C803_76.9 S4 MX4LA4**	186	**C803_76.9 P132 BE132MA4**	**C803_76.9 P132 BX132MA4**	187
19.5	3392	2.1	74.4	55200	**C903_74.4 S4 ME4LA4**	**C903_74.4 S4 MX4LA4**	189	**C903_74.4 P132 BE132MA4**	**C903_74.4 P132 BX132MA4**	190
20.6	3213	1.2	70.5	35000	**C803_70.5 S4 ME4LA4**	**C803_70.5 S4 MX4LA4**	186	**C803_70.5 P132 BE132MA4**	**C803_70.5 P132 BX132MA4**	187
22.5	2943	2.4	64.6	54000	**C903_64.6 S4 ME4LA4**	**C903_64.6 S4 MX4LA4**	189	**C903_64.6 P132 BE132MA4**	**C903_64.6 P132 BX132MA4**	190
23.3	2848	1.4	62.5	35000	**C803_62.5 S4 ME4LA4**	**C803_62.5 S4 MX4LA4**	186	**C803_62.5 P132 BE132MA4**	**C803_62.5 P132 BX132MA4**	187
24.6	2698	2.6	59.2	53000	**C903_59.2 S4 ME4LA4**	**C903_59.2 S4 MX4LA4**	189	**C903_59.2 P132 BE132MA4**	**C903_59.2 P132 BX132MA4**	190
25.4	2611	1.5	57.3	35000	**C803_57.3 S4 ME4LA4**	**C803_57.3 S4 MX4LA4**	186	**C803_57.3 P132 BE132MA4**	**C803_57.3 P132 BX132MA4**	187
26.5	2501	2.9	54.9	52400	**C903_54.9 S4 ME4LA4**	**C903_54.9 S4 MX4LA4**	189	**C903_54.9 P132 BE132MA4**	**C903_54.9 P132 BX132MA4**	190
27.9	2377	1.0	52.2	22900	**C703_52.2 S4 ME4LA4**	**C703_52.2 S4 MX4LA4**	183	**C703_52.2 P132 BE132MA4**	**C703_52.2 P132 BX132MA4**	184
31	2162	1.8	47.4	35000	**C803_47.4 S4 ME4LA4**	**C803_47.4 S4 MX4LA4**	186	**C803_47.4 P132 BE132MA4**	**C803_47.4 P132 BX132MA4**	187
33	2037	1.1	44.7	22500	**C703_44.7 S4 ME4LA4**	**C703_44.7 S4 MX4LA4**	183	**C703_44.7 P132 BE132MA4**	**C703_44.7 P132 BX132MA4**	184
33	1982	1.9	43.5	35000	**C803_43.5 S4 ME4LA4**	**C803_43.5 S4 MX4LA4**	186	**C803_43.5 P132 BE132MA4**	**C803_43.5 P132 BX132MA4**	187
35	1880	1.2	41.3	22300	**C703_41.3 S4 ME4LA4**	**C703_41.3 S4 MX4LA4**	183	**C703_41.3 P132 BE132MA4**	**C703_41.3 P132 BX132MA4**	184
37	1821	1.8	39.1	33600	**C802_39.1 S4 ME4LA4**	**C802_39.1 S4 MX4LA4**	186	**C802_39.1 P132 BE132MA4**	**C802_39.1 P132 BX132MA4**	187
40	1594	1.0	36.1	13300	**C613_36.1 S4 ME4LA4**	**C613_36.1 S4 MX4LA4**	179	**C613_36.1 P132 BE132MA4**	**C613_36.1 P132 BX132MA4**	180
41	1634	3.3	35.1	47300	**C902_35.1 S4 ME4LA4**	**C902_35.1 S4 MX4LA4**	189	**C902_35.1 P132 BE132MA4**	**C902_35.1 P132 BX132MA4**	190
42	1617	1.3	34.7	20500	**C702_34.7 S4 ME4LA4**	**C702_34.7 S4 MX4LA4**	183	**C702_34.7 P132 BE132MA4**	**C702_34.7 P132 BX132MA4**	184
44	1454	1.0	33.0	13100	**C613_33.0 S4 ME4LA4**	**C613_33.0 S4 MX4LA4**	179	**C613_33.0 P132 BE132MA4**	**C613_33.0 P132 BX132MA4**	180
46	1459	2.5	31.3	32200	**C802_31.3 S4 ME4LA4**	**C802_31.3 S4 MX4LA4**	186	**C802_31.3 P132 BE132MA4**	**C802_31.3 P132 BX132MA4**	187
48	1417	1.0	30.4	13000	**C612_30.4 S4 ME4LA4**	**C612_30.4 S4 MX4LA4**	179	**C612_30.4 P132 BE132MA4**	**C612_30.4 P132 BX132MA4**	180
50	1295	1.1	29.4	13100	**C613_29.4 S4 ME4LA4**	**C613_29.4 S4 MX4LA4**	179	**C613_29.4 P132 BE132MA4**	**C613_29.4 P132 BX132MA4**	180
52	1290	1.6	27.7	20000	**C702_27.7 S4 ME4LA4**	**C702_27.7 S4 MX4LA4**	183	**C702_27.7 P132 BE132MA4**	**C702_27.7 P132 BX132MA4**	184
53	1276	1.1	27.4	12800	**C612_27.4 S4 ME4LA4**	**C612_27.4 S4 MX4LA4**	179	**C612_27.4 P132 BE132MA4**	**C612_27.4 P132 BX132MA4**	180
56	1208	3.1	25.9	31000	**C802_25.9 S4 ME4LA4**	**C802_25.9 S4 MX4LA4**	186	**C802_25.9 P132 BE132MA4**	**C802_25.9 P132 BX132MA4**	187
59	1155	1.2	24.8	12700	**C612_24.8 S4 ME4LA4**	**C612_24.8 S4 MX4LA4**	179	**C612_24.8 P132 BE132MA4**	**C612_24.8 P132 BX132MA4**	180
61	1115	3.2	24.0	30500	**C802_24.0 S4 ME4LA4**	**C802_24.0 S4 MX4LA4**	186	**C802_24.0 P132 BE132MA4**	**C802_24.0 P132 BX132MA4**	187
64	1064	2.0	22.9	19400	**C702_22.9 S4 ME4LA4**	**C702_22.9 S4 MX4LA4**	183	**C702_22.9 P132 BE132MA4**	**C702_22.9 P132 BX132MA4**	184
65	1040	1.3	22.4	12500	**C612_22.4 S4 ME4LA4**	**C612_22.4 S4 MX4LA4**	179	**C612_22.4 P132 BE132MA4**	**C612_22.4 P132 BX132MA4**	180
65	1035	3.6	22.2	30000	**C802_22.2 S4 ME4LA4**	**C802_22.2 S4 MX4LA4**	186	**C802_22.2 P132 BE132MA4**	**C802_22.2 P132 BX132MA4**	187
67	994	0.9	21.8	7200	**C513_21.8 S4 ME4LA4**	**C513_21.8 S4 MX4LA4**	175	**C513_21.8 P132 BE132MA4**	**C513_21.8 P132 BX132MA4**	176
74	912	1.5	19.6	12300	**C612_19.6 S4 ME4LA4**	**C612_19.6 S4 MX4LA4**	179	**C612_19.6 P132 BE132MA4**	**C612_19.6 P132 BX132MA4**	180
75	898	2.3	19.3	18900	**C702_19.3 S4 ME4LA4**	**C702_19.3 S4 MX4LA4**	183	**C702_19.3 P132 BE132MA4**	**C702_19.3 P132 BX132MA4**	184
77	879	0.9	18.9	7100	**C512_18.9 S4 ME4LA4**	**C512_18.9 S4 MX4LA4**	175	**C512_18.9 P132 BE132MA4**	**C512_18.9 P132 BX132MA4**	176
82	822	1.6	17.7	12000	**C612_17.7 S4 ME4LA4**	**C612_17.7 S4 MX4LA4**	179	**C612_17.7 P132 BE132MA4**	**C612_17.7 P132 BX132MA4**	180
87	778	2.6	16.7	18200	**C702_16.7 S4 ME4LA4**	**C702_16.7 S4 MX4LA4**	183	**C702_16.7 P132 BE132MA4**	**C702_16.7 P132 BX132MA4**	184
88	773	1.0	16.6	8070	**C512_16.6 S4 ME4LA4**	**C512_16.6 S4 MX4LA4**	175	**C512_16.6 P132 BE132MA4**	**C512_16.6 P132 BX132MA4**	176
91	742	1.8	15.9	11800	**C612_15.9 S4 ME4LA4**	**C612_15.9 S4 MX4LA4**	179	**C612_15.9 P132 BE132MA4**	**C612_15.9 P132 BX132MA4**	180
95	714	2.9	15.3	18000	**C702_15.3 S4 ME4LA4**	**C702_15.3 S4 MX4LA4**	183	**C702_15.3 P132 BE132MA4**	**C702_15.3 P132 BX132MA4**	184
97	697	1.1	15.0	8000	**C512_15.0 S4 ME4LA4**	**C512_15.0 S4 MX4LA4**	175	**C512_15.0 P132 BE132MA4**	**C512_15.0 P132 BX132MA4**	176
101	668	2.0	14.3	11500	**C612_14.3 S4 ME4LA4**	**C612_14.3 S4 MX4LA4**	179	**C612_14.3 P132 BE132MA4**	**C612_14.3 P132 BX132MA4**	180
111	611	1.2	13.1	7840	**C512_13.1 S4 ME4LA4**	**C512_13.1 S4 MX4LA4**	175	**C512_13.1 P132 BE132MA4**	**C512_13.1 P132 BX132MA4**	176
120	563	2.4	12.1	11100	**C612_12.1 S4 ME4LA4**	**C612_12.1 S4 MX4LA4**	179	**C612_12.1 P132 BE132MA4**	**C612_12.1 P132 BX132MA4**	180
123	551	1.4	11.8	7730	**C512_11.8 S4 ME4LA4**	**C512_11.8 S4 MX4LA4**	175	**C512_11.8 P132 BE132MA4**	**C512_11.8 P132 BX132MA4**	176
134	507	2.7	10.9	10900	**C612_10.9 S4 ME4LA4**	**C612_10.9 S4 MX4LA4**	179	**C612_10.9 P132 BE132MA4**	**C612_10.9 P132 BX132MA4**	180
148	457	3.0	9.8	10600	**C612_9.8 S4 ME4LA4**	**C612_9.8 S4 MX4LA4**	179	**C612_9.8 P132 BE132MA4**	**C612_9.8 P132 BX132MA4**	180
149	454	1.5	9.8	7450	**C512_9.8 S4 ME4LA4**	**C512_9.8 S4 MX4LA4**	175	**C512_9.8 P132 BE132MA4**	**C512_9.8 P132 BX132MA4**	176
152	447	0.9	9.6	3300	**C412_9.6 S4 ME4LA4**	**C412_9.6 S4 MX4LA4**	171	**C412_9.6 P132 BE132MA4**	**C412_9.6 P132 BX132MA4**	172
165	412	3.3	8.8	10300	**C612_8.8 S4 ME4LA4**	**C612_8.8 S4 MX4LA4**	179	**C612_8.8 P132 BE132MA4**	**C612_8.8 P132 BX132MA4**	180

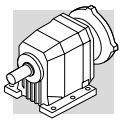

7.5 kW

n_2 min-1	M_2 Nm	S	i	R_{n2} N	IE2	IE3		IEC IE2	IEC IE3	
165	410	0.9	8.8	2880	**C362_8.8 S4 ME4LA4**	**C362_8.8 S4 MX4LA4**	167	**C362_8.8 P132 BE132MA4**	**C362_8.8 P132 BX132MA4**	168
166	409	1.7	8.8	7320	**C512_8.8 S4 ME4LA4**	**C512_8.8 S4 MX4LA4**	175	**C512_8.8 P132 BE132MA4**	**C512_8.8 P132 BX132MA4**	176
168	402	1.0	8.6	3430	**C412_8.6 S4 ME4LA4**	**C412_8.6 S4 MX4LA4**	171	**C412_8.6 P132 BE132MA4**	**C412_8.6 P132 BX132MA4**	172
181	374	1.0	8.0	2900	**C362_8.0 S4 ME4LA4**	**C362_8.0 S4 MX4LA4**	167	**C362_8.0 P132 BE132MA4**	**C362_8.0 P132 BX132MA4**	168
188	361	1.8	7.8	7120	**C512_7.8 S4 ME4LA4**	**C512_7.8 S4 MX4LA4**	175	**C512_7.8 P132 BE132MA4**	**C512_7.8 P132 BX132MA4**	176
206	329	1.1	7.1	3470	**C412_7.1 S4 ME4LA4**	**C412_7.1 S4 MX4LA4**	171	**C412_7.1 P132 BE132MA4**	**C412_7.1 P132 BX132MA4**	172
208	325	1.9	7.0	6970	**C512_7.0 S4 ME4LA4**	**C512_7.0 S4 MX4LA4**	175	**C512_7.0 P132 BE132MA4**	**C512_7.0 P132 BX132MA4**	176
215	316	1.1	6.8	2900	**C362_6.8 S4 ME4LA4**	**C362_6.8 S4 MX4LA4**	167	**C362_6.8 P132 BE132MA4**	**C362_6.8 P132 BX132MA4**	168
229	296	1.2	6.4	3440	**C412_6.4 S4 ME4LA4**	**C412_6.4 S4 MX4LA4**	171	**C412_6.4 P132 BE132MA4**	**C412_6.4 P132 BX132MA4**	172
242	279	2.4	6.0	9180	**C612_6.0 S4 ME4LA4**	**C612_6.0 S4 MX4LA4**	179	**C612_6.0 P132 BE132MA4**	**C612_6.0 P132 BX132MA4**	180
244	277	0.9	6.0	2920	**C412_6.0 S4 ME4LA4**	**C412_6.0 S4 MX4LA4**	171	**C412_6.0 P132 BE132MA4**	**C412_6.0 P132 BX132MA4**	172
258	262	1.7	5.6	6410	**C512_5.6 S4 ME4LA4**	**C512_5.6 S4 MX4LA4**	175	**C512_5.6 P132 BE132MA4**	**C512_5.6 P132 BX132MA4**	176
312	217	1.2	4.7	2960	**C412_4.7 S4 ME4LA4**	**C412_4.7 S4 MX4LA4**	171	**C412_4.7 P132 BE132MA4**	**C412_4.7 P132 BX132MA4**	172
315	215	0.9	4.6	2600	**C362_4.6 S4 ME4LA4**	**C362_4.6 S4 MX4LA4**	167	**C362_4.6 P132 BE132MA4**	**C362_4.6 P132 BX132MA4**	168
319	212	3.1	4.6	8550	**C612_4.6 S4 ME4LA4**	**C612_4.6 S4 MX4LA4**	179	**C612_4.6 P132 BE132MA4**	**C612_4.6 P132 BX132MA4**	180
327	207	2.1	4.5	6090	**C512_4.5 S4 ME4LA4**	**C512_4.5 S4 MX4LA4**	175	**C512_4.5 P132 BE132MA4**	**C512_4.5 P132 BX132MA4**	176
342	199	3.3	2.8	8390	**C612_2.8 S5 ME5SB6**		179	**C612_2.8 P160 BE160MB6**		180
346	196	1.0	4.2	2550	**C362_4.2 S4 ME4LA4**	**C362_4.2 S4 MX4LA4**	167	**C362_4.2 P132 BE132MA4**	**C362_4.2 P132 BX132MA4**	168
367	185	2.2	2.6	5920	**C512_2.6 S5 ME5SB6**		175	**C512_2.6 P160 BE160MB6**		176
403	168	1.5	3.6	2930	**C412_3.6 S4 ME4LA4**	**C412_3.6 S4 MX4LA4**	171	**C412_3.6 P132 BE132MA4**	**C412_3.6 P132 BX132MA4**	172
414	164	2.2	7.1	3240	**C412_7.1 S4 ME4LA2**		171	**C412_7.1 P132 BE132SB2**		172
417	162	1.2	3.5	2500	**C362_3.5 S4 ME4LA4**	**C362_3.5 S4 MX4LA4**	167	**C362_3.5 P132 BE132MA4**	**C362_3.5 P132 BX132MA4**	168
440	154	2.7	3.3	5660	**C512_3.3 S4 ME4LA4**	**C512_3.3 S4 MX4LA4**	175	**C512_3.3 P132 BE132MA4**	**C512_3.3 P132 BX132MA4**	176
457	148	1.4	3.2	2500	**C362_3.2 S4 ME4LA4**	**C362_3.2 S4 MX4LA4**	167	**C362_3.2 P132 BE132MA4**	**C362_3.2 P132 BX132MA4**	168
460	148	2.3	6.4	3170	**C412_6.4 S4 ME4LA2**		171	**C412_6.4 P132 BE132SB2**		172
491	138	1.9	6.0	2880	**C412_6.0 S4 ME4LA2**		171	**C412_6.0 P132 BE132SB2**		172
505	134	1.0	2.9	2100	**C322_2.9 S4 ME4LA4**	**C322_2.9 S4 MX4LA4**	163	**C322_2.9 P132 BN132MA4**	**C322_2.9 P132 BX132MA4**	164
519	131	3.3	5.6	5420	**C512_5.6 S4 ME4LA2**		175	**C512_5.6 P132 BE132SB2**		176
542	125	1.6	2.7	2440	**C362_2.7 S4 ME4LA4**	**C362_2.7 S4 MX4LA4**	167	**C362_2.7 P132 BE132MA4**	**C362_2.7 P132 BX132MA4**	168
547	124	2.0	2.7	2840	**C412_2.7 S4 ME4LA4**	**C412_2.7 S4 MX4LA4**	171	**C412_2.7 P132 BE132MA4**	**C412_2.7 P132 BX132MA4**	172
553	122	3.3	2.6	5330	**C512_2.6 S4 ME4LA4**	**C512_2.6 S4 MX4LA4**	175	**C512_2.6 P132 BE132MA4**	**C512_2.6 P132 BX132MA4**	176
554	123	1.6	5.3	2370	**C362_5.3 S4 ME4LA2**		167	**C362_5.3 P132 BE132SB2**		168
627	108	2.4	4.7	2790	**C412_4.7 S4 ME4LA2**		171	**C412_4.7 P132 BE132SB2**		172
633	108	1.9	4.6	2330	**C362_4.6 S4 ME4LA2**		167	**C362_4.6 P132 BE132SB2**		168
696	98	2.0	4.2	2290	**C362_4.2 S4 ME4LA2**		167	**C362_4.2 P132 BE132SB2**		168
810	84	3.0	3.6	2670	**C412_3.6 S4 ME4LA2**		171	**C412_3.6 P132 BE132SB2**		172
839	81	2.5	3.5	2210	**C362_3.5 S4 ME4LA2**		167	**C362_3.5 P132 BE132SB2**		168
919	74	2.7	3.2	2170	**C362_3.2 S4 ME4LA2**		167	**C362_3.2 P132 BE132SB2**		168
1089	62	3.2	2.7	2100	**C362_2.7 S4 ME4LA2**		167	**C362_2.7 P132 BE132SB2**		168

7.5 kW

n_2 min-1	M_2 Nm	S	i	R_{n2} N	IE3		IEC IE3	
4.8	13252	0.9	300.5	85000			**C1004_300.5 P132 BXN132M4**	193
5.5	11598	1.0	263.0	85000			**C1004_263.0 P132 BXN132M4**	193
6.0	10770	1.1	244.2	85000			**C1004_244.2 P132 BXN132M4**	193
7.3	8804	1.4	199.6	85000			**C1004_199.6 P132 BXN132M4**	193
7.8	8175	1.5	185.4	85000			**C1004_185.4 P132 BXN132M4**	193
8.5	7843	0.9	172.1	60000			**C903_172.1 P132 BXN132M4**	190
9.0	7149	1.7	162.1	85000			**C1004_162.1 P132 BXN132M4**	193
9.2	7189	1.0	157.8	60000			**C903_157.8 P132 BXN132M4**	190

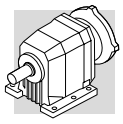

7.5 kW

n_2 min-1	M_2 Nm	S	i	R_{n2} N	IE3		IEC IE3	
9.7	6855	1.8	150.4	85000			**C1003_150.4 P132 BXN132M4**	193
9.9	6668	1.1	146.3	59600			**C903_146.3 P132 BXN132M4**	190
10.4	6365	1.7	139.7	85000			**C1003_139.7 P132 BXN132M4**	193
10.8	6113	1.2	134.1	59400			**C903_134.1 P132 BXN132M4**	190
12.1	5492	2.2	120.5	85000			**C1003_120.5 P132 BXN132M4**	193
12.5	5319	1.4	116.7	58600			**C903_116.7 P132 BXN132M4**	190
13.0	5100	2.4	111.9	85000			**C1003_111.9 P132 BXN132M4**	193
13.6	4876	1.5	107.0	58200			**C903_107.0 P132 BXN132M4**	190
14.6	4548	2.6	99.8	85000			**C1003_99.8 P132 BXN132M4**	193
14.9	4438	0.9	97.4	34500			**C803_97.4 P132 BXN132M4**	187
15.1	4386	1.6	96.2	57500			**C903_96.2 P132 BXN132M4**	190
15.7	4223	2.8	92.7	85000			**C1003_92.7 P132 BXN132M4**	193
16.3	4068	1.0	89.3	35000			**C803_89.3 P132 BXN132M4**	187
16.5	4020	1.8	88.2	56600			**C903_88.2 P132 BXN132M4**	190
17.0	3899	3.1	85.6	85000			**C1003_85.6 P132 BXN132M4**	193
17.9	3701	1.9	81.2	56100			**C903_81.2 P132 BXN132M4**	190
18.9	3505	1.1	76.9	35000			**C803_76.9 P132 BXN132M4**	187
19.5	3392	2.1	74.4	55200			**C903_74.4 P132 BXN132M4**	190
20.6	3213	1.2	70.5	35000			**C803_70.5 P132 BXN132M4**	187
22.5	2943	2.4	64.6	54000			**C903_64.6 P132 BXN132M4**	190
23.3	2848	1.4	62.5	35000			**C803_62.5 P132 BXN132M4**	187
24.6	2698	2.6	59.2	53000			**C903_59.2 P132 BXN132M4**	190
25.4	2611	1.5	57.3	35000			**C803_57.3 P132 BXN132M4**	187
26.5	2501	2.9	54.9	52400			**C903_54.9 P132 BXN132M4**	190
27.9	2377	1.0	52.2	22900			**C703_52.2 P132 BXN132M4**	184
31	2162	1.8	47.4	35000			**C803_47.4 P132 BXN132M4**	187
33	2037	1.1	44.7	22500			**C703_44.7 P132 BXN132M4**	184
33	1982	1.9	43.5	35000			**C803_43.5 P132 BXN132M4**	187
35	1880	1.2	41.3	22300			**C703_41.3 P132 BXN132M4**	184
37	1821	1.8	39.1	33600			**C802_39.1 P132 BXN132M4**	187
40	1594	1.0	36.1	13300			**C613_36.1 P132 BXN132M4**	180
41	1634	3.3	35.1	47300			**C902_35.1 P132 BXN132M4**	190
42	1617	1.3	34.7	20500			**C702_34.7 P132 BXN132M4**	184
44	1454	1.0	33.0	13100			**C613_33.0 P132 BXN132M4**	180
46	1459	2.5	31.3	32200			**C802_31.3 P132 BXN132M4**	187
48	1417	1.0	30.4	13000			**C612_30.4 P132 BXN132M4**	180
50	1295	1.1	29.4	13100			**C613_29.4 P132 BXN132M4**	180
52	1290	1.6	27.7	20000			**C702_27.7 P132 BXN132M4**	184
53	1276	1.1	27.4	12800			**C612_27.4 P132 BXN132M4**	180
56	1208	3.1	25.9	31000			**C802_25.9 P132 BXN132M4**	187
59	1155	1.2	24.8	12700			**C612_24.8 P132 BXN132M4**	180
61	1115	3.2	24.0	30500			**C802_24.0 P132 BXN132M4**	187
64	1064	2.0	22.9	19400			**C702_22.9 P132 BXN132M4**	184
65	1040	1.3	22.4	12500			**C612_22.4 P132 BXN132M4**	180
65	1035	3.6	22.2	30000			**C802_22.2 P132 BXN132M4**	187
67	994	0.9	21.8	7200			**C513_21.8 P132 BXN132M4**	176
74	912	1.5	19.6	12300			**C612_19.6 P132 BXN132M4**	180
75	898	2.3	19.3	18900			**C702_19.3 P132 BXN132M4**	184
77	879	0.9	18.9	7100			**C512_18.9 P132 BXN132M4**	176
82	822	1.6	17.7	12000			**C612_17.7 P132 BXN132M4**	180
87	778	2.6	16.7	18200			**C702_16.7 P132 BXN132M4**	184
88	773	1.0	16.6	8070			**C512_16.6 P132 BXN132M4**	176
91	742	1.8	15.9	11800			**C612_15.9 P132 BXN132M4**	180
95	714	2.9	15.3	18000			**C702_15.3 P132 BXN132M4**	184
97	697	1.1	15.0	8000			**C512_15.0 P132 BXN132M4**	176
101	668	2.0	14.3	11500			**C612_14.3 P132 BXN132M4**	180
111	611	1.2	13.1	7840			**C512_13.1 P132 BXN132M4**	176

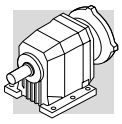

7.5 kW

n_2 min-1	M_2 Nm	S	i	R_{n2} N	IE3		IEC IE3	
120	563	2.4	12.1	11100			**C612_12.1 P132 BXN132M4**	180
123	551	1.4	11.8	7730			**C512_11.8 P132 BXN132M4**	176
134	507	2.7	10.9	10900			**C612_10.9 P132 BXN132M4**	180
148	457	3.0	9.8	10600			**C612_9.8 P132 BXN132M4**	180
149	454	1.5	9.8	7450			**C512_9.8 P132 BXN132M4**	176
152	447	0.9	9.6	3300			**C412_9.6 P132 BXN132M4**	172
165	412	3.3	8.8	10300			**C612_8.8 P132 BXN132M4**	180
165	410	0.9	8.8	2880			**C362_8.8 P132 BXN132M4**	168
166	409	1.7	8.8	7320			**C512_8.8 P132 BXN132M4**	176
168	402	1.0	8.6	3430			**C412_8.6 P132 BXN132M4**	172
181	374	1.0	8.0	2900			**C362_8.0 P132 BXN132M4**	168
188	361	1.8	7.8	7120			**C512_7.8 P132 BXN132M4**	176
206	329	1.1	7.1	3470			**C412_7.1 P132 BXN132M4**	172
208	325	1.9	7.0	6970			**C512_7.0 P132 BXN132M4**	176
215	316	1.1	6.8	2900			**C362_6.8 P132 BXN132M4**	168
229	296	1.2	6.4	3440			**C412_6.4 P132 BXN132M4**	172
242	279	2.4	6.0	9180			**C612_6.0 P132 BXN132M4**	180
244	277	0.9	6.0	2920			**C412_6.0 P132 BXN132M4**	172
258	262	1.7	5.6	6410			**C512_5.6 P132 BXN132M4**	176
312	217	1.2	4.7	2960			**C412_4.7 P132 BXN132M4**	172
315	215	0.9	4.6	2600			**C362_4.6 P132 BXN132M4**	168
319	212	3.1	4.6	8550			**C612_4.6 P132 BXN132M4**	180
327	207	2.1	4.5	6090			**C512_4.5 P132 BXN132M4**	176
346	196	1.0	4.2	2550			**C362_4.2 P132 BXN132M4**	168
403	168	1.5	3.6	2930			**C412_3.6 P132 BXN132M4**	172
417	162	1.2	3.5	2500			**C362_3.5 P132 BXN132M4**	168
440	154	2.7	3.3	5660			**C512_3.3 P132 BXN132M4**	176
457	148	1.4	3.2	2500			**C362_3.2 P132 BXN132M4**	168
505	134	1.0	2.9	2100			**C322_2.9 P132 BXN132M4**	164
542	125	1.6	2.7	2440			**C362_2.7 P132 BXN132M4**	168
547	124	2.0	2.7	2840			**C412_2.7 P132 BXN132M4**	172
553	122	3.3	2.6	5330			**C512_2.6 P132 BXN132M4**	176

9.2 kW

n_2 min-1	M_2 Nm	S	i	R_{n2} N	IE2	IE3		IEC IE2	IEC IE3	
5.9	13408	0.9	244.2	85000	**C1004_244.2 S4 ME4LB4**		192	**C1004_244.2 P132 BE132MB4**	**C1004_244.2 P160 BX160MA4**	193
7.3	10960	1.1	199.6	85000	**C1004_199.6 S4 ME4LB4**		192	**C1004_199.6 P132 BE132MB4**	**C1004_199.6 P160 BX160MA4**	193
7.8	10177	1.2	185.4	85000	**C1004_185.4 S4 ME4LB4**		192	**C1004_185.4 P132 BE132MB4**	**C1004_185.4 P160 BX160MA4**	193
8.9	8900	1.3	162.1	85000	**C1004_162.1 S4 ME4LB4**		192	**C1004_162.1 P132 BE132MB4**	**C1004_162.1 P160 BX160MA4**	193
9.6	8534	1.4	150.4	85000	**C1003_150.4 S4 ME4LB4**	**C1003_150.4 S5 MX5SA4**	192	**C1003_150.4 P132 BE132MB4**	**C1003_150.4 P160 BX160MA4**	193
10.4	7924	1.4	139.7	85000	**C1003_139.7 S4 ME4LB4**	**C1003_139.7 S5 MX5SA4**	192	**C1003_139.7 P132 BE132MB4**	**C1003_139.7 P160 BX160MA4**	193
10.8	7610	0.9	134.1	54900	**C903_134.1 S4 ME4LB4**	**C903_134.1 S5 MX5SA4**	189	**C903_134.1 P132 BE132MB4**	**C903_134.1 P160 BX160MA4**	190
12.0	6837	1.8	120.5	85000	**C1003_120.5 S4 ME4LB4**	**C1003_120.5 S5 MX5SA4**	192	**C1003_120.5 P132 BE132MB4**	**C1003_120.5 P160 BX160MA4**	193
12.4	6622	1.1	116.7	54800	**C903_116.7 S4 ME4LB4**	**C903_116.7 S5 MX5SA4**	189	**C903_116.7 P132 BE132MB4**	**C903_116.7 P160 BX160MA4**	190
13.0	6348	1.9	111.9	85000	**C1003_111.9 S4 ME4LB4**	**C1003_111.9 S5 MX5SA4**	192	**C1003_111.9 P132 BE132MB4**	**C1003_111.9 P160 BX160MA4**	193
13.6	6070	1.2	107.0	54600	**C903_107.0 S4 ME4LB4**	**C903_107.0 S5 MX5SA4**	189	**C903_107.0 P132 BE132MB4**	**C903_107.0 P160 BX160MA4**	190
14.5	5662	2.1	99.8	85000	**C1003_99.8 S4 ME4LB4**	**C1003_99.8 S5 MX5SA4**	192	**C1003_99.8 P132 BE132MB4**	**C1003_99.8 P160 BX160MA4**	193

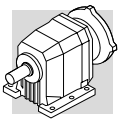

9.2 kW

n_2 min-1	M_2 Nm	S	i	R_{n2} N	IE2	IE3		IEC IE2	IEC IE3	
15.1	5460	1.3	96.2	54200	**C903_96.2 S4 ME4LB4**	**C903_96.2 S5 MX5SA4**	189	**C903_96.2 P132 BE132MB4**	**C903_96.2 P160 BX160MA4**	190
15.6	5257	2.3	92.7	85000	**C1003_92.7 S4 ME4LB4**	**C1003_92.7 S5 MX5SA4**	192	**C1003_92.7 P132 BE132MB4**	**C1003_92.7 P160 BX160MA4**	193
16.4	5005	1.4	88.2	53700	**C903_88.2 S4 ME4LB4**	**C903_88.2 S5 MX5SA4**	189	**C903_88.2 P132 BE132MB4**	**C903_88.2 P160 BX160MA4**	190
16.9	4854	2.5	85.6	85000	**C1003_85.6 S4 ME4LB4**	**C1003_85.6 S5 MX5SA4**	192	**C1003_85.6 P132 BE132MB4**	**C1003_85.6 P160 BX160MA4**	193
17.9	4607	1.6	81.2	53300	**C903_81.2 S4 ME4LB4**	**C903_81.2 S5 MX5SA4**	189	**C903_81.2 P132 BE132MB4**	**C903_81.2 P160 BX160MA4**	190
18.3	4507	2.7	79.4	85000	**C1003_79.4 S4 ME4LB4**	**C1003_79.4 S5 MX5SA4**	192	**C1003_79.4 P132 BE132MB4**	**C1003_79.4 P160 BX160MA4**	193
18.9	4363	0.9	76.9	33700	**C803_76.9 S4 ME4LB4**	**C803_76.9 S5 MX5SA4**	186	**C803_76.9 P132 BE132MB4**	**C803_76.9 P160 BX160MA4**	187
19.5	4223	1.7	74.4	52700	**C903_74.4 S4 ME4LB4**	**C903_74.4 S5 MX5SA4**	189	**C903_74.4 P132 BE132MB4**	**C903_74.4 P160 BX160MA4**	190
20.6	4000	1.0	70.5	35000	**C803_70.5 S4 ME4LB4**	**C803_70.5 S5 MX5SA4**	186	**C803_70.5 P132 BE132MB4**	**C803_70.5 P160 BX160MA4**	187
22.5	3664	2.0	64.6	51800	**C903_64.6 S4 ME4LB4**	**C903_64.6 S5 MX5SA4**	189	**C903_64.6 P132 BE132MB4**	**C903_64.6 P160 BX160MA4**	190
23.2	3546	1.1	62.5	35000	**C803_62.5 S4 ME4LB4**	**C803_62.5 S5 MX5SA4**	186	**C803_62.5 P132 BE132MB4**	**C803_62.5 P160 BX160MA4**	187
24.5	3358	2.1	59.2	51100	**C903_59.2 S4 ME4LB4**	**C903_59.2 S5 MX5SA4**	189	**C903_59.2 P132 BE132MB4**	**C903_59.2 P160 BX160MA4**	190
25.3	3250	1.2	57.3	35000	**C803_57.3 S4 ME4LB4**	**C803_57.3 S5 MX5SA4**	186	**C803_57.3 P132 BE132MB4**	**C803_57.3 P160 BX160MA4**	187
26.4	3113	2.3	54.9	50500	**C903_54.9 S4 ME4LB4**	**C903_54.9 S5 MX5SA4**	189	**C903_54.9 P132 BE132MB4**	**C903_54.9 P160 BX160MA4**	190
28.8	2854	2.5	50.3	49700	**C903_50.3 S4 ME4LB4**	**C903_50.3 S5 MX5SA4**	189	**C903_50.3 P132 BE132MB4**	**C903_50.3 P160 BX160MA4**	190
31	2692	1.4	47.4	34900	**C803_47.4 S4 ME4LB4**	**C803_47.4 S5 MX5SA4**	186	**C803_47.4 P132 BE132MB4**	**C803_47.4 P160 BX160MA4**	187
32	2536	0.9	44.7	21100	**C703_44.7 S4 ME4LB4**	**C703_44.7 S5 MX5SA4**	183	**C703_44.7 P132 BE132MB4**	**C703_44.7 P160 BX160MA4**	184
33	2467	1.5	43.5	34400	**C803_43.5 S4 ME4LB4**	**C803_43.5 S5 MX5SA4**	186	**C803_43.5 P132 BE132MB4**	**C803_43.5 P160 BX160MA4**	187
34	2439	3.0	43.0	48300	**C903_43.0 S4 ME4LB4**	**C903_43.0 S5 MX5SA4**	189	**C903_43.0 P132 BE132MB4**	**C903_43.0 P160 BX160MA4**	190
35	2341	1.0	41.3	21000	**C703_41.3 S4 ME4LB4**	**C703_41.3 S5 MX5SA4**	183	**C703_41.3 P132 BE132MB4**	**C703_41.3 P160 BX160MA4**	184
37	2266	1.4	39.1	32300	**C802_39.1 S4 ME4LB4**	**C802_39.1 S5 MX5SA4**	186	**C802_39.1 P132 BE132MB4**	**C802_39.1 P160 BX160MA4**	187
41	2034	2.7	35.1	46200	**C902_35.1 S4 ME4LB4**	**C902_35.1 S5 MX5SA4**	189	**C902_35.1 P132 BE132MB4**	**C902_35.1 P160 BX160MA4**	190
42	2014	1.0	34.7	19200	**C702_34.7 S4 ME4LB4**	**C702_34.7 S5 MX5SA4**	183	**C702_34.7 P132 BE132MB4**	**C702_34.7 P160 BX160MA4**	184
46	1816	2.0	31.3	31100	**C802_31.3 S4 ME4LB4**	**C802_31.3 S5 MX5SA4**	186	**C802_31.3 P132 BE132MB4**	**C802_31.3 P160 BX160MA4**	187
49	1706	3.5	29.4	44600	**C902_29.4 S4 ME4LB4**	**C902_29.4 S5 MX5SA4**	189	**C902_29.4 P132 BE132MB4**	**C902_29.4 P160 BX160MA4**	190
49	1612	0.9	29.4	10500	**C613_29.4 S4 ME4LB4**	**C613_29.4 S5 MX5SA4**	179	**C613_29.4 P132 BE132MB4**	**C613_29.4 P160 BX160MA4**	180
52	1606	1.3	27.7	18900	**C702_27.7 S4 ME4LB4**	**C702_27.7 S5 MX5SA4**	183	**C702_27.7 P132 BE132MB4**	**C702_27.7 P160 BX160MA4**	184
54	1470	1.0	26.8	11400	**C613_26.8 S4 ME4LB4**	**C613_26.8 S5 MX5SA4**	179	**C613_26.8 P132 BE132MB4**	**C613_26.8 P160 BX160MA4**	180
56	1504	2.5	25.9	30300	**C802_25.9 S4 ME4LB4**	**C802_25.9 S5 MX5SA4**	186	**C802_25.9 P132 BE132MB4**	**C802_25.9 P160 BX160MA4**	187
58	1438	0.9	24.8	11800	**C612_24.8 S4 ME4LB4**	**C612_24.8 S5 MX5SA4**	179	**C612_24.8 P132 BE132MB4**	**C612_24.8 P160 BX160MA4**	180
61	1388	2.6	24.0	30000	**C802_24.0 S4 ME4LB4**	**C802_24.0 S5 MX5SA4**	186	**C802_24.0 P132 BE132MB4**	**C802_24.0 P160 BX160MA4**	187
63	1324	1.6	22.9	18500	**C702_22.9 S4 ME4LB4**	**C702_22.9 S5 MX5SA4**	183	**C702_22.9 P132 BE132MB4**	**C702_22.9 P160 BX160MA4**	184
65	1295	1.0	22.4	11700	**C612_22.4 S4 ME4LB4**	**C612_22.4 S5 MX5SA4**	179	**C612_22.4 P132 BE132MB4**	**C612_22.4 P160 BX160MA4**	180
65	1289	2.9	22.2	29200	**C802_22.2 S4 ME4LB4**	**C802_22.2 S5 MX5SA4**	186	**C802_22.2 P132 BE132MB4**	**C802_22.2 P160 BX160MA4**	187
71	1190	3.0	20.5	28900	**C802_20.5 S4 ME4LB4**	**C802_20.5 S5 MX5SA4**	186	**C802_20.5 P132 BE132MB4**	**C802_20.5 P160 BX160MA4**	187
74	1136	1.2	19.6	11600	**C612_19.6 S4 ME4LB4**	**C612_19.6 S5 MX5SA4**	179	**C612_19.6 P132 BE132MB4**	**C612_19.6 P160 BX160MA4**	180
75	1118	1.9	19.3	18100	**C702_19.3 S4 ME4LB4**	**C702_19.3 S5 MX5SA4**	183	**C702_19.3 P132 BE132MB4**	**C702_19.3 P160 BX160MA4**	184
82	1023	1.3	17.7	11400	**C612_17.7 S4 ME4LB4**	**C612_17.7 S5 MX5SA4**	179	**C612_17.7 P132 BE132MB4**	**C612_17.7 P160 BX160MA4**	180
87	968	2.1	16.7	17500	**C702_16.7 S4 ME4LB4**	**C702_16.7 S5 MX5SA4**	183	**C702_16.7 P132 BE132MB4**	**C702_16.7 P160 BX160MA4**	184
91	923	1.5	15.9	11200	**C612_15.9 S4 ME4LB4**	**C612_15.9 S5 MX5SA4**	179	**C612_15.9 P132 BE132MB4**	**C612_15.9 P160 BX160MA4**	180
95	889	2.4	15.3	17500	**C702_15.3 S4 ME4LB4**	**C702_15.3 S5 MX5SA4**	183	**C702_15.3 P132 BE132MB4**	**C702_15.3 P160 BX160MA4**	184
97	867	0.9	15.0	7430	**C512_15.0 S4 ME4LB4**	**C512_15.0 S5 MX5SA4**	175	**C512_15.0 P132 BE132MB4**	**C512_15.0 P160 BX160MA4**	176
101	831	1.6	14.3	11000	**C612_14.3 S4 ME4LB4**	**C612_14.3 S5 MX5SA4**	179	**C612_14.3 P132 BE132MB4**	**C612_14.3 P160 BX160MA4**	180
103	817	2.6	14.1	17000	**C702_14.1 S4 ME4LB4**	**C702_14.1 S5 MX5SA4**	183	**C702_14.1 P132 BE132MB4**	**C702_14.1 P160 BX160MA4**	184
110	761	1.0	13.1	7340	**C512_13.1 S4 ME4LB4**	**C512_13.1 S5 MX5SA4**	175	**C512_13.1 P132 BE132MB4**	**C512_13.1 P160 BX160MA4**	176
111	755	2.8	13.0	17000	**C702_13.0 S4 ME4LB4**	**C702_13.0 S5 MX5SA4**	183	**C702_13.0 P132 BE132MB4**	**C702_13.0 P160 BX160MA4**	184
120	701	1.9	12.1	10700	**C612_12.1 S4 ME4LB4**	**C612_12.1 S5 MX5SA4**	179	**C612_12.1 P132 BE132MB4**	**C612_12.1 P160 BX160MA4**	180
123	686	1.1	11.8	7280	**C512_11.8 S4 ME4LB4**	**C512_11.8 S5 MX5SA4**	175	**C512_11.8 P132 BE132MB4**	**C512_11.8 P160 BX160MA4**	176
128	653	3.2	22.9	16500	**C702_22.9 S4 ME4LB2**	**C702_22.9 S5 ME4LB2**	183	**C702_22.9 P132 BE132MB2**	**C702_22.9 P160 BE132MB2**	184
133	631	2.1	10.9	10500	**C612_10.9 S4 ME4LB4**	**C612_10.9 S5 MX5SA4**	179	**C612_10.9 P132 BE132MB4**	**C612_10.9 P160 BX160MA4**	180
148	569	2.4	9.8	10300	**C612_9.8 S4 ME4LB4**	**C612_9.8 S5 MX5SA4**	179	**C612_9.8 P132 BE132MB4**	**C612_9.8 P160 BX160MA4**	180
149	565	1.2	9.8	7080	**C512_9.8 S4 ME4LB4**	**C512_9.8 S5 MX5SA4**	175	**C512_9.8 P132 BE132MB4**	**C512_9.8 P160 BX160MA4**	176
164	512	2.6	8.8	10000	**C612_8.8 S4 ME4LB4**	**C612_8.8 S5 MX5SA4**	179	**C612_8.8 P132 BE132MB4**	**C612_8.8 P160 BX160MA4**	180

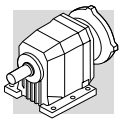

9.2 kW

n_2 min-1	M_2 Nm	S	i	R_{n2} N	IE2	IE3		IEC IE2	IEC IE3	
165	509	1.3	8.8	6990	**C512_8.8 S4 ME4LB4**	**C512_8.8 S5 MX5SA4**	175	**C512_8.8 P132 BE132MB4**	**C512_8.8 P160 BX160MA4**	176
187	449	1.4	7.8	6820	**C512_7.8 S4 ME4LB4**	**C512_7.8 S5 MX5SA4**	175	**C512_7.8 P132 BE132MB4**	**C512_7.8 P160 BX160MA4**	176
194	434	3.1	7.5	9670	**C612_7.5 S4 ME4LB4**	**C612_7.5 S5 MX5SA4**	179	**C612_7.5 P132 BE132MB4**	**C612_7.5 P160 BX160MA4**	180
208	405	1.6	7.0	6710	**C512_7.0 S4 ME4LB4**	**C512_7.0 S5 MX5SA4**	175	**C512_7.0 P132 BE132MB4**	**C512_7.0 P160 BX160MA4**	176
215	391	3.5	6.7	9410	**C612_6.7 S4 ME4LB4**	**C612_6.7 S5 MX5SA4**	179	**C612_6.7 P132 BE132MB4**	**C612_6.7 P160 BX160MA4**	180
228	369	0.9	6.4	3100	**C412_6.4 S4 ME4LB4**		171	**C412_6.4 P132 BE132MB4**		172
242	348	1.9	6.0	8930	**C612_6.0 S4 ME4LB4**	**C612_6.0 S5 MX5SA4**	179	**C612_6.0 P132 BE132MB4**	**C612_6.0 P160 BX160MA4**	180
258	326	1.3	5.6	6150	**C512_5.6 S4 ME4LB4**	**C512_5.6 S5 MX5SA4**	175	**C512_5.6 P132 BE132MB4**	**C512_5.6 P160 BX160MA4**	176
262	319	1.3	11.2	3110	**C412_11.2 S4 ME4LB2**		171	**C412_11.2 P132 BE132MB2**		172
311	270	1.0	4.7	2620	**C412_4.7 S4 ME4LB4**		171	**C412_4.7 P132 BE132MB4**		172
318	264	2.5	4.6	8360	**C612_4.6 S4 ME4LB4**	**C612_4.6 S5 MX5SA4**	179	**C612_4.6 P132 BE132MB4**	**C612_4.6 P160 BX160MA4**	180
326	258	1.7	4.5	5880	**C512_4.5 S4 ME4LB4**	**C512_4.5 S5 MX5SA4**	175	**C512_4.5 P132 BE132MB4**	**C512_5.6 P160 BX160MA4**	176
338	247	1.6	8.6	3090	**C412_8.6 S4 ME4LB2**		171	**C412_8.6 P132 BE132MB2**		172
377	222	2.9	7.8	5870	**C512_7.8 S4 ME4LB2**		175	**C512_7.8 P132 BE132MB2**		176
402	209	1.2	3.6	2670	**C412_3.6 S4 ME4LB4**		171	**C412_3.6 P132 BE132MB4**		172
413	202	1.8	7.1	3050	**C412_7.1 S4 ME4LB2**		171	**C412_7.1 P132 BE132MB2**		172
416	202	1.0	3.5	2300	**C362_3.5 S4 ME4LB4**		167	**C362_3.5 P132 BE132MB4**		168
418	200	3.2	7.0	5730	**C512_7.0 S4 ME4LB2**		175	**C512_7.0 P132 BE132MB2**		176
438	192	2.2	3.3	5510	**C512_3.3 S4 ME4LB4**	**C512_3.3 S5 MX5SA4**	175	**C512_3.3 P132 BE132MB4**	**C512_3.3 P160 BX160MA4**	176
456	184	1.1	3.2	2300	**C362_3.2 S4 ME4LB4**		167	**C362_3.2 P132 BE132MB4**		168
459	182	1.9	6.4	3000	**C412_6.4 S4 ME4LB2**		171	**C412_6.4 P132 BE132MB2**		172
491	170	1.5	6.0	2660	**C412_6.0 S4 ME4LB2**		171	**C412_6.0 P132 BE132MB2**		172
519	161	2.7	5.6	5290	**C512_5.6 S4 ME4LB2**		175	**C512_5.6 P132 BE132MB2**		176
540	156	1.3	2.7	2280	**C362_2.7 S4 ME4LB4**		167	**C362_2.7 P132 BE132MB4**		168
545	154	1.6	2.7	2650	**C412_2.7 S4 ME4LB4**		171	**C412_2.7 P132 BE132MB4**		172
552	152	2.6	2.6	5210	**C512_2.6 S4 ME4LB4**	**C512_2.6 S5 MX5SA4**	175	**C512_2.6 P132 BE132MB4**	**C512_2.6 P160 BX160MA4**	176
626	133	2.0	4.7	2620	**C412_4.7 S4 ME4LB2**		171	**C412_4.7 P132 BE132MB2**		172
656	127	3.4	4.5	4980	**C512_4.5 S4 ME4LB2**		175	**C512_4.5 P132 BE132MB2**		176
695	120	1.7	4.2	2180	**C362_4.2 S4 ME4LB2**		167	**C362_4.2 P132 BE132MB2**		168
809	103	2.5	3.6	2540	**C412_3.6 S4 ME4LB2**		171	**C412_3.6 P132 BE132MB2**		172
838	100	2.0	3.5	2120	**C362_3.5 S4 ME4LB2**		167	**C362_3.5 P132 BE132MB2**		168
918	91	2.2	3.2	2090	**C362_3.2 S4 ME4LB2**		167	**C362_3.2 P132 BE132MB2**		168
1087	77	2.6	2.7	2020	**C362_2.7 S4 ME4LB2**		167	**C362_2.7 P132 BE132MB2**		168
1098	76	3.2	2.7	2410	**C412_2.7 S4 ME4LB2**		171	**C412_2.7 P132 BE132MB2**		172

11 kW

n_2 min-1	M_2 Nm	S	i	R_{n2} N	IE2	IE3		IEC IE2	IEC IE3	
7.4	12936	0.9	199.6	85000	**C1004_199.6 S5 ME5SA4**	**C1004_199.6 S5 MX5SB4**	192	**C1004_199.6 P160 BE160M4**	**C1004_199.6 P160 BX160MB4**	193
7.9	12012	1.0	185.4	85000	**C1004_185.4 S5 ME5SA4**	**C1004_185.4 S5 MX5SB4**	192	**C1004_185.4 P160 BE160M4**	**C1004_185.4 P160 BX160MB4**	193
9.1	10504	1.1	162.1	85000	**C1004_162.1 S5 ME5SA4**	**C1004_162.1 S5 MX5SB4**	192	**C1004_162.1 P160 BE160M4**	**C1004_162.1 P160 BX160MB4**	193
9.8	10073	1.2	150.4	85000	**C1003_150.4 S5 ME5SA4**	**C1003_150.4 S5 MX5SB4**	192	**C1003_150.4 P160 BE160M4**	**C1003_150.4 P160 BX160MB4**	193
10.5	9353	1.2	139.7	85000	**C1003_139.7 S5 ME5SA4**	**C1003_139.7 S5 MX5SB4**	192	**C1003_139.7 P160 BE160M4**	**C1003_139.7 P160 BX160MB4**	193
12.2	8070	1.5	120.5	85000	**C1003_120.5 S5 ME5SA4**	**C1003_120.5 S5 MX5SB4**	192	**C1003_120.5 P160 BE160M4**	**C1003_120.5 P160 BX160MB4**	193
12.6	7816	0.9	116.7	50800	**C903_116.7 S5 ME5SA4**	**C903_116.7 S5 MX5SB4**	189	**C903_116.7 P160 BE160M4**	**C903_116.7 P160 BX160MB4**	190
13.1	7493	1.6	111.9	85000	**C1003_111.9 S5 ME5SA4**	**C1003_111.9 S5 MX5SB4**	192	**C1003_111.9 P160 BE160M4**	**C1003_111.9 P160 BX160MB4**	193
13.7	7165	1.0	107.0	51000	**C903_107.0 S5 ME5SA4**	**C903_107.0 S5 MX5SB4**	189	**C903_107.0 P160 BE160M4**	**C903_107.0 P160 BX160MB4**	190
14.7	6683	1.8	99.8	85000	**C1003_99.8 S5 ME5SA4**	**C1003_99.8 S5 MX5SB4**	192	**C1003_99.8 P160 BE160M4**	**C1003_99.8 P160 BX160MB4**	193

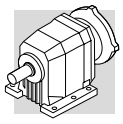

11 kW

n_2 min-1	M_2 Nm	S	i	R_{n2} N	IE2	IE3		IEC IE2	IEC IE3	
15.3	6444	1.1	96.2	50800	**C903_96.2 S5 ME5SA4**	**C903_96.2 S5 MX5SB4**	189	**C903_96.2 P160 BE160M4**	**C903_96.2 P160 BX160MB4**	190
15.9	6205	1.9	92.7	85000	**C1003_92.7 S5 ME5SA4**	**C1003_92.7 S5 MX5SB4**	192	**C1003_92.7 P160 BE160M4**	**C1003_92.7 P160 BX160MB4**	193
16.7	5907	1.2	88.2	50700	**C903_88.2 S5 ME5SA4**	**C903_88.2 S5 MX5SB4**	189	**C903_88.2 P160 BE160M4**	**C903_88.2 P160 BX160MB4**	190
17.2	5729	2.1	85.6	85000	**C1003_85.6 S5 ME5SA4**	**C1003_85.6 S5 MX5SB4**	192	**C1003_85.6 P160 BE160M4**	**C1003_85.6 P160 BX160MB4**	193
18.1	5438	1.3	81.2	50700	**C903_81.2 S5 ME5SA4**	**C903_81.2 S5 MX5SB4**	189	**C903_81.2 P160 BE160M4**	**C903_81.2 P160 BX160MB4**	190
18.5	5320	2.3	79.4	85000	**C1003_79.4 S5 ME5SA4**	**C1003_79.4 S5 MX5SB4**	192	**C1003_79.4 P160 BE160M4**	**C1003_79.4 P160 BX160MB4**	193
19.7	4985	1.4	74.4	50200	**C903_74.4 S5 ME5SA4**	**C903_74.4 S5 MX5SB4**	189	**C903_74.4 P160 BE160M4**	**C903_74.4 P160 BX160MB4**	190
21.2	4649	2.6	69.4	84800	**C1003_69.4 S5 ME5SA4**	**C1003_69.4 S5 MX5SB4**	192	**C1003_69.4 P160 BE160M4**	**C1003_69.4 P160 BX160MB4**	193
22.8	4324	1.7	64.6	50000	**C903_64.6 S5 ME5SA4**	**C903_64.6 S5 MX5SB4**	189	**C903_64.6 P160 BE160M4**	**C903_64.6 P160 BX160MB4**	190
22.8	4317	2.8	64.5	83100	**C1003_64.5 S5 ME5SA4**	**C1003_64.5 S5 MX5SB4**	192	**C1003_64.5 P160 BE160M4**	**C1003_64.5 P160 BX160MB4**	193
23.5	4185	1.0	62.5	33000	**C803_62.5 S5 ME5SA4**	**C803_62.5 S5 MX5SB4**	186	**C803_62.5 P160 BE160M4**	**C803_62.5 P160 BX160MB4**	187
24.8	3964	1.8	59.2	49000	**C903_59.2 S5 ME5SA4**	**C903_59.2 S5 MX5SB4**	189	**C903_59.2 P160 BE160M4**	**C903_59.2 P160 BX160MB4**	190
25.7	3837	1.0	57.3	34200	**C803_57.3 S5 ME5SA4**	**C803_57.3 S5 MX5SB4**	186	**C803_57.3 P160 BE160M4**	**C803_57.3 P160 BX160MB4**	187
26.8	3674	2.0	54.9	48800	**C903_54.9 S5 ME5SA4**	**C903_54.9 S5 MX5SB4**	189	**C903_54.9 P160 BE160M4**	**C903_54.9 P160 BX160MB4**	190
29.2	3368	2.1	50.3	48000	**C903_50.3 S5 ME5SA4**	**C903_50.3 S5 MX5SB4**	189	**C903_50.3 P160 BE160M4**	**C903_50.3 P160 BX160MB4**	190
31	3177	1.2	47.4	33500	**C803_47.4 S5 ME5SA4**	**C803_47.4 S5 MX5SB4**	186	**C803_47.4 P160 BE160M4**	**C803_47.4 P160 BX160MB4**	187
34	2912	1.3	43.5	33100	**C803_43.5 S5 ME5SA4**	**C803_43.5 S5 MX5SB4**	186	**C803_43.5 P160 BE160M4**	**C803_43.5 P160 BX160MB4**	187
34	2878	2.5	43.0	47000	**C903_43.0 S5 ME5SA4**	**C903_43.0 S5 MX5SB4**	189	**C903_43.0 P160 BE160M4**	**C903_43.0 P160 BX160MB4**	190
37	2638	2.7	39.4	46100	**C903_39.4 S5 ME5SA4**	**C903_39.4 S5 MX5SB4**	189	**C903_39.4 P160 BE160M4**	**C903_39.4 P160 BX160MB4**	190
38	2675	1.2	39.1	30900	**C802_39.1 S5 ME5SA4**	**C802_39.1 S5 MX5SB4**	186	**C802_39.1 P160 BE160M4**	**C802_39.1 P160 BX160MB4**	187
42	2401	2.2	35.1	45000	**C902_35.1 S5 ME5SA4**	**C902_35.1 S5 MX5SB4**	189	**C902_35.1 P160 BE160M4**	**C902_35.1 P160 BX160MB4**	190
47	2143	1.7	31.3	30000	**C802_31.3 S5 ME5SA4**	**C802_31.3 S5 MX5SB4**	186	**C802_31.3 P160 BE160M4**	**C802_31.3 P160 BX160MB4**	187
50	2013	2.9	29.4	43400	**C902_29.4 S5 ME5SA4**	**C902_29.4 S5 MX5SB4**	189	**C902_29.4 P160 BE160M4**	**C902_29.4 P160 BX160MB4**	190
53	1896	1.1	27.7	17800	**C702_27.7 S5 ME5SA4**	**C702_27.7 S5 MX5SB4**	183	**C702_27.7 P160 BE160M4**	**C702_27.7 P160 BX160MB4**	184
54	1859	3.0	27.2	42700	**C902_27.2 S5 ME5SA4**	**C902_27.2 S5 MX5SB4**	189	**C902_27.2 P160 BE160M4**	**C902_27.2 P160 BX160MB4**	190
57	1775	2.1	25.9	29200	**C802_25.9 S5 ME5SA4**	**C802_25.9 S5 MX5SB4**	186	**C802_25.9 P160 BE160M4**	**C802_25.9 P160 BX160MB4**	187
61	1638	2.2	24.0	28700	**C802_24.0 S5 ME5SA4**	**C802_24.0 S5 MX5SB4**	186	**C802_24.0 P160 BE160M4**	**C802_24.0 P160 BX160MB4**	187
64	1563	1.3	22.9	17600	**C702_22.9 S5 ME5SA4**	**C702_22.9 S5 MX5SB4**	183	**C702_22.9 P160 BE160M4**	**C702_22.9 P160 BX160MB4**	184
66	1522	2.4	22.2	28400	**C802_22.2 S5 ME5SA4**	**C802_22.2 S5 MX5SB4**	186	**C802_22.2 P160 BE160M4**	**C802_22.2 P160 BX160MB4**	187
72	1404	2.5	20.5	28000	**C802_20.5 S5 ME5SA4**	**C802_20.5 S5 MX5SB4**	186	**C802_20.5 P160 BE160M4**	**C802_20.5 P160 BX160MB4**	187
75	1341	1.0	19.6	10800	**C612_19.6 S5 ME5SA4**	**C612_19.6 S5 MX5SB4**	179	**C612_19.6 P160 BE160M4**	**C612_19.6 P160 BX160MB4**	180
76	1319	1.6	19.3	17300	**C702_19.3 S5 ME5SA4**	**C702_19.3 S5 MX5SB4**	183	**C702_19.3 P160 BE160M4**	**C702_19.3 P160 BX160MB4**	184
81	1235	3.0	18.1	27300	**C802_18.1 S5 ME5SA4**	**C802_18.1 S5 MX5SB4**	186	**C802_18.1 P160 BE160M4**	**C802_18.1 P160 BX160MB4**	187
83	1207	1.1	17.7	10700	**C612_17.7 S5 ME5SA4**	**C612_17.7 S5 MX5SB4**	179	**C612_17.7 P160 BE160M4**	**C612_17.7 P160 BX160MB4**	180
88	1143	1.8	16.7	16800	**C702_16.7 S5 ME5SA4**	**C702_16.7 S5 MX5SB4**	183	**C702_16.7 P160 BE160M4**	**C702_16.7 P160 BX160MB4**	184
88	1140	3.1	16.7	26900	**C802_16.7 S5 ME5SA4**	**C802_16.7 S5 MX5SB4**	186	**C802_16.7 P160 BE160M4**	**C802_16.7 P160 BX160MB4**	187
92	1090	1.2	15.9	10700	**C612_15.9 S5 ME5SA4**	**C612_15.9 S5 MX5SB4**	179	**C612_15.9 P160 BE160M4**	**C612_15.9 P160 BX160MB4**	180
96	1049	2.0	15.3	16800	**C702_15.3 S5 ME5SA4**	**C702_15.3 S5 MX5SB4**	183	**C702_15.3 P160 BE160M4**	**C702_15.3 P160 BX160MB4**	184
102	981	1.4	14.3	10500	**C612_14.3 S5 ME5SA4**	**C612_14.3 S5 MX5SB4**	179	**C612_14.3 P160 BE160M4**	**C612_14.3 P160 BX160MB4**	180
104	964	2.2	14.1	16400	**C702_14.1 S5 ME5SA4**	**C702_14.1 S5 MX5SB4**	183	**C702_14.1 P160 BE160M4**	**C702_14.1 P160 BX160MB4**	184
113	891	2.4	13.0	16400	**C702_13.0 S5 ME5SA4**	**C702_13.0 S5 MX5SB4**	183	**C702_13.0 P160 BE160M4**	**C702_13.0 P160 BX160MB4**	184
122	827	1.6	12.1	10300	**C612_12.1 S5 ME5SA4**	**C612_12.1 S5 MX5SB4**	179	**C612_12.1 P160 BE160M4**	**C612_12.1 P160 BX160MB4**	180
124	810	1.0	11.8	6810	**C512_11.8 S5 ME5SA4**	**C512_11.8 S5 MX5SB4**	175	**C512_11.8 P160 BE160M4**	**C512_11.8 P160 BX160MB4**	176
131	767	2.8	11.2	15800	**C702_11.2 S5 ME5SA4**	**C702_11.2 S5 MX5SB4**	183	**C702_11.2 P160 BE160M4**	**C702_11.2 P160 BX160MB4**	184
135	745	1.8	10.9	10100	**C612_10.9 S5 ME5SA4**	**C612_10.9 S5 MX5SB4**	179	**C612_10.9 P160 BE160M4**	**C612_10.9 P160 BX160MB4**	180
144	698	3.0	10.2	15700	**C702_10.2 S5 ME5SA4**	**C702_10.2 S5 MX5SB4**	183	**C702_10.2 P160 BE160M4**	**C702_10.2 P160 BX160MB4**	184
150	672	2.0	9.8	9910	**C612_9.8 S5 ME5SA4**	**C612_9.8 S5 MX5SB4**	179	**C612_9.8 P160 BE160M4**	**C612_9.8 P160 BX160MB4**	180
151	667	1.0	9.8	6690	**C512_9.8 S5 ME5SA4**	**C512_9.8 S5 MX5SB4**	175	**C512_9.8 P160 BE160M4**	**C512_9.8 P160 BX160MB4**	176
154	651	3.3	9.5	15400	**C702_9.5 S5 ME5SA4**	**C702_9.5 S5 MX5SB4**	183	**C702_9.5 P160 BE160M4**	**C702_9.5 P160 BX160MB4**	184
166	605	2.2	8.8	9690	**C612_8.8 S5 ME5SA4**	**C612_8.8 S5 MX5SB4**	179	**C612_8.8 P160 BE160M4**	**C612_8.8 P160 BX160MB4**	180
167	601	1.1	8.8	6640	**C512_8.8 S5 ME5SA4**	**C512_8.8 S5 MX5SB4**	175	**C512_8.8 P160 BE160M4**	**C512_8.8 P160 BX160MB4**	176
190	530	1.2	7.8	6510	**C512_7.8 S5 ME5SA4**	**C512_7.8 S5 MX5SB4**	175	**C512_7.8 P160 BE160M4**	**C512_7.8 P160 BX160MB4**	176
196	512	2.6	7.5	9390	**C612_7.5 S5 ME5SA4**	**C612_7.5 S5 MX5SB4**	179	**C612_7.5 P160 BE160M4**	**C612_7.5 P160 BX160MB4**	180
210	478	1.3	7.0	6430	**C512_7.0 S5 ME5SA4**	**C512_7.0 S5 MX5SB4**	175	**C512_7.0 P160 BE160M4**	**C512_7.0 P160 BX160MB4**	176
218	461	2.9	6.7	9150	**C612_6.7 S5 ME5SA4**	**C612_6.7 S5 MX5SB4**	179	**C612_6.7 P160 BE160M4**	**C612_6.7 P160 BX160MB4**	180
245	411	1.6	6.0	8670	**C612_6.0 S5 ME5SA4**	**C612_6.0 S5 MX5SB4**	179	**C612_6.0 P160 BE160M4**	**C612_6.0 P160 BX160MB4**	180
261	385	1.1	5.6	5880	**C512_5.6 S5 ME5SA4**	**C512_5.6 S5 MX5SB4**	175	**C512_5.6 P160 BE160M4**	**C512_5.6 P160 BX160MB4**	176

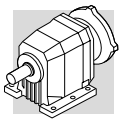

11 kW

n_2	M_2	S	i	R_{n2}	IE2	IE3		IE2	IEC IE3	
min-1	Nm			N						
323	312	2.1	4.6	8160	**C612_4.6 S5 ME5SA4**	**C612_4.6 S5 MX5SB4**	179	**C612_4.6 P160 BE160M4**	**C612_4.6 P160 BX160MB4**	180
330	305	1.4	4.5	5660	**C512_4.5 S5 ME5SA4**	**C512_4.5 S5 MX5SB4**	175	**C512_4.5 P160 BE160M4**	**C512_4.5 P160 BX160MB4**	176
397	253	2.6	3.7	7760	**C612_3.7 S5 ME5SA4**	**C612_3.7 S5 MX5SB4**	179	**C612_3.7 P160 BE160M4**	**C612_3.7 P160 BX160MB4**	180
444	226	1.9	3.3	5340	**C512_3.3 S5 ME5SA4**	**C512_3.3 S5 MX5SB4**	175	**C512_3.3 P160 BE160M4**	**C512_3.3 P160 BX160MB4**	176
521	193	3.4	2.8	7240	**C612_2.8 S5 ME5SA4**	**C612_2.8 S5 MX5SB4**	179	**C612_2.8 P160 BE160M4**	**C612_2.8 P160 BX160MB4**	180
522	191	2.3	5.6	5140	**C512_5.6 S5 ME5SA2**		175	**C512_5.6 P160 BE160MA2**		176
559	180	2.2	2.6	5080	**C512_2.6 S5 ME5SA4**	**C512_2.6 S5 MX5SB4**	175	**C512_2.6 P160 BE160M4**	**C512_2.6 P160 BX160MB4**	176
660	151	2.9	4.5	4870	**C512_4.5 S5 ME5SA2**		175	**C512_4.5 P160 BE160MA2**		176

15 kW

n_2	M_2	S	i	R_{n2}	IE2	IE3		IE2	IEC IE3	
min-1	Nm			N						
12.2	10984	1.1	120.5	83800	**C1003_120.5 S5 ME5LA4**	**C1003_120.5 S5 MX5LA4**	192	**C1003_120.5 P160 BE160L4**	**C1003_120.5 P160 BX160L4**	193
13.1	10199	1.2	111.9	83300	**C1003_111.9 S5 ME5LA4**	**C1003_111.9 S5 MX5LA4**	192	**C1003_111.9 P160 BE160L4**	**C1003_111.9 P160 BX160L4**	193
14.7	9096	1.3	99.8	82700	**C1003_99.8 S5 ME5LA4**	**C1003_99.8 S5 MX5LA4**	192	**C1003_99.8 P160 BE160L4**	**C1003_99.8 P160 BX160L4**	193
15.9	8446	1.4	92.7	82400	**C1003_92.7 S5 ME5LA4**	**C1003_92.7 S5 MX5LA4**	192	**C1003_92.7 P160 BE160L4**	**C1003_92.7 P160 BX160L4**	193
17.2	7798	1.5	85.6	81500	**C1003_85.6 S5 ME5LA4**	**C1003_85.6 S5 MX5LA4**	192	**C1003_85.6 P160 BE160L4**	**C1003_85.6 P160 BX160L4**	193
18.1	7402	1.0	81.2	44300	**C903_81.2 S5 ME5LA4**	**C903_81.2 S5 MX5LA4**	189	**C903_81.2 P160 BE160L4**	**C903_81.2 P160 BX160L4**	190
18.5	7241	1.7	79.4	81000	**C1003_79.4 S5 ME5LA4**	**C1003_79.4 S5 MX5LA4**	192	**C1003_79.4 P160 BE160L4**	**C1003_79.4 P160 BX160L4**	193
19.7	6785	1.0	74.4	44800	**C903_74.4 S5 ME5LA4**	**C903_74.4 S5 MX5LA4**	189	**C903_74.4 P160 BE160L4**	**C903_74.4 P160 BX160L4**	190
21.2	6328	1.9	69.4	79500	**C1003_69.4 S5 ME5LA4**	**C1003_69.4 S5 MX5LA4**	192	**C1003_69.4 P160 BE160L4**	**C1003_69.4 P160 BX160L4**	193
22.8	5886	1.2	64.6	44500	**C903_64.6 S5 ME5LA4**	**C903_64.6 S5 MX5LA4**	189	**C903_64.6 P160 BE160L4**	**C903_64.6 P160 BX160L4**	190
22.8	5876	2.0	64.5	78600	**C1003_64.5 S5 ME5LA4**	**C1003_64.5 S5 MX5LA4**	192	**C1003_64.5 P160 BE160L4**	**C1003_64.5 P160 BX160L4**	193
24.8	5396	1.3	59.2	44400	**C903_59.2 S5 ME5LA4**	**C903_59.2 S5 MX5LA4**	189	**C903_59.2 P160 BE160L4**	**C903_59.2 P160 BX160L4**	190
25.6	5227	2.3	57.4	77400	**C1003_57.4 S5 ME5LA4**	**C1003_57.4 S5 MX5LA4**	192	**C1003_57.4 P160 BE160L4**	**C1003_57.4 P160 BX160L4**	193
26.8	5001	1.4	54.9	44300	**C903_54.9 S5 ME5LA4**	**C903_54.9 S5 MX5LA4**	189	**C903_54.9 P160 BE160L4**	**C903_54.9 P160 BX160L4**	190
27.6	4854	2.5	53.3	76200	**C1003_53.3 S5 ME5LA4**	**C1003_53.3 S5 MX5LA4**	192	**C1003_53.3 P160 BE160L4**	**C1003_53.3 P160 BX160L4**	193
29.2	4584	1.5	50.3	44100	**C903_50.3 S5 ME5LA4**	**C903_50.3 S5 MX5LA4**	189	**C903_50.3 P160 BE160L4**	**C903_50.3 P160 BX160L4**	190
32	4213	2.8	46.2	74500	**C1003_46.2 S5 ME5LA4**	**C1003_46.2 S5 MX5LA4**	192	**C1003_46.2 P160 BE160L4**	**C1003_46.2 P160 BX160L4**	193
34	3964	1.0	43.5	30300	**C803_43.5 S5 ME5LA4**	**C803_43.5 S5 MX5LA4**	186	**C803_43.5 P160 BE160L4**	**C803_43.5 P160 BX160L4**	187
34	3918	1.8	43.0	44100	**C903_43.0 S5 ME5LA4**	**C903_43.0 S5 MX5LA4**	189	**C903_43.0 P160 BE160L4**	**C903_43.0 P160 BX160L4**	190
37	3591	2.0	39.4	43000	**C903_39.4 S5 ME5LA4**	**C903_39.4 S5 MX5LA4**	189	**C903_39.4 P160 BE160L4**	**C903_39.4 P160 BX160L4**	190
38	3641	0.9	39.1	27300	**C802_39.1 S5 ME5LA4**	**C802_39.1 S5 MX5LA4**	186	**C802_39.1 P160 BE160L4**	**C802_39.1 P160 BX160L4**	187
42	3268	1.7	35.1	42200	**C902_35.1 S5 ME5LA4**	**C902_35.1 S5 MX5LA4**	189	**C902_35.1 P160 BE160L4**	**C902_35.1 P160 BX160L4**	190
47	2917	1.3	31.3	27500	**C802_31.3 S5 ME5LA4**	**C802_31.3 S5 MX5LA4**	186	**C802_31.3 P160 BE160L4**	**C802_31.3 P160 BX160L4**	187
50	2740	2.2	29.4	41100	**C902_29.4 S5 ME5LA4**	**C902_29.4 S5 MX5LA4**	189	**C902_29.4 P160 BE160L4**	**C902_29.4 P160 BX160L4**	190
54	2530	2.2	27.2	40700	**C902_27.2 S5 ME5LA4**	**C902_27.2 S5 MX5LA4**	189	**C902_27.2 P160 BE160L4**	**C902_27.2 P160 BX160L4**	190
57	2416	1.5	25.9	27100	**C802_25.9 S5 ME5LA4**	**C802_25.9 S5 MX5LA4**	186	**C802_25.9 P160 BE160L4**	**C802_25.9 P160 BX160L4**	187
59	2311	2.9	24.8	40000	**C902_24.8 S5 ME5LA4**	**C902_24.8 S5 MX5LA4**	189	**C902_24.8 P160 BE160L4**	**C902_24.8 P160 BX160L4**	190
61	2230	1.6	24.0	26900	**C802_24.0 S5 ME5LA4**	**C802_24.0 S5 MX5LA4**	186	**C802_24.0 P160 BE160L4**	**C802_24.0 P160 BX160L4**	187
64	2134	2.9	22.9	39500	**C902_22.9 S5 ME5LA4**	**C902_22.9 S5 MX5LA4**	189	**C902_22.9 P160 BE160L4**	**C902_22.9 P160 BX160L4**	190
64	2128	1.0	22.9	15400	**C702_22.9 S5 ME5LA4**	**C702_22.9 S5 MX5LA4**	183	**C702_22.9 P160 BE160L4**	**C702_22.9 P160 BX160L4**	184
66	2071	1.8	22.2	26600	**C802_22.2 S5 ME5LA4**	**C802_22.2 S5 MX5LA4**	186	**C802_22.2 P160 BE160L4**	**C802_22.2 P160 BX160L4**	187
72	1912	1.9	20.5	26200	**C802_20.5 S5 ME5LA4**	**C802_20.5 S5 MX5LA4**	186	**C802_20.5 P160 BE160L4**	**C802_20.5 P160 BX160L4**	187
73	1884	3.5	20.2	38500	**C902_20.2 S5 ME5LA4**	**C902_20.2 S5 MX5LA4**	189	**C902_20.2 P160 BE160L4**	**C902_20.2 P160 BX160L4**	190
76	1795	1.2	19.3	15600	**C702_19.3 S5 ME5LA4**	**C702_19.3 S5 MX5LA4**	183	**C702_19.3 P160 BE160L4**	**C702_19.3 P160 BX160L4**	184
81	1681	2.2	18.1	25800	**C802_18.1 S5 ME5LA4**	**C802_18.1 S5 MX5LA4**	186	**C802_18.1 P160 BE160L4**	**C802_18.1 P160 BX160L4**	187
88	1555	1.3	16.7	15400	**C702_16.7 S5 ME5LA4**	**C702_16.7 S5 MX5LA4**	183	**C702_16.7 P160 BE160L4**	**C702_16.7 P160 BX160L4**	184
88	1551	2.3	16.7	25500	**C802_16.7 S5 ME5LA4**	**C802_16.7 S5 MX5LA4**	186	**C802_16.7 P160 BE160L4**	**C802_16.7 P160 BX160L4**	187
92	1483	0.9	15.9	9350	**C612_15.9 S5 ME5LA4**	**C612_15.9 S5 MX5LA4**	179	**C612_15.9 P160 BE160L4**	**C612_15.9 P160 BX160L4**	180
96	1428	1.5	15.3	15400	**C702_15.3 S5 ME5LA4**	**C702_15.3 S5 MX5LA4**	183	**C702_15.3 P160 BE160L4**	**C702_15.3 P160 BX160L4**	184
99	1388	2.7	14.9	25000	**C802_14.9 S5 ME5LA4**	**C802_14.9 S5 MX5LA4**	186	**C802_14.9 P160 BE160L4**	**C802_14.9 P160 BX160L4**	187
102	1336	1.0	14.3	9280	**C612_14.3 S5 ME5LA4**	**C612_14.3 S5 MX5LA4**	179	**C612_14.3 P160 BE160L4**	**C612_14.3 P160 BX160L4**	180
104	1312	1.6	14.1	15300	**C702_14.1 S5 ME5LA4**	**C702_14.1 S5 MX5LA4**	183	**C702_14.1 P160 BE160L4**	**C702_14.1 P160 BX160L4**	184
107	1281	2.7	13.8	25000	**C802_13.8 S5 ME5LA4**	**C802_13.8 S5 MX5LA4**	186	**C802_13.8 P160 BE160L4**	**C802_13.8 P160 BX160L4**	187
113	1213	1.7	13.0	15200	**C702_13.0 S5 ME5LA4**	**C702_13.0 S5 MX5LA4**	183	**C702_13.0 P160 BE160L4**	**C702_13.0 P160 BX160L4**	184
122	1126	1.2	12.1	9270	**C612_12.1 S5 ME5LA4**	**C612_12.1 S5 MX5LA4**	179	**C612_12.1 P160 BE160L4**	**C612_12.1 P160 BX160L4**	180
131	1044	2.1	11.2	14700	**C702_11.2 S5 ME5LA4**	**C702_11.2 S5 MX5LA4**	183	**C702_11.2 P160 BE160L4**	**C702_11.2 P160 BX160L4**	184

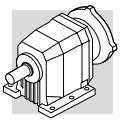

15 kW

n_2	M_2	S	i	R_{n2}	IE2	IE3		IE2	IEC IE3	
min-1	Nm			N						
135	1014	1.3	10.9	9140	**C612_10.9 S5 ME5LA4**	**C612_10.9 S5 MX5LA4**	179	**C612_10.9 P160 BE160L4**	**C612_10.9 P160 BX160L4**	180
144	950	2.2	10.2	14600	**C702_10.2 S5 ME5LA4**	**C702_10.2 S5 MX5LA4**	183	**C702_10.2 P160 BE160L4**	**C702_10.2 P160 BX160L4**	184
150	914	1.5	9.8	9090	**C612_9.8 S5 ME5LA4**	**C612_9.8 S5 MX5LA4**	179	**C612_9.8 P160 BE160L4**	**C612_9.8 P160 BX160L4**	180
154	887	2.4	9.5	14400	**C702_9.5 S5 ME5LA4**	**C702_9.5 S5 MX5LA4**	183	**C702_9.5 P160 BE160L4**	**C702_9.5 P160 BX160L4**	184
166	823	1.6	8.8	8930	**C612_8.8 S5 ME5LA4**	**C612_8.8 S5 MX5LA4**	179	**C612_8.8 P160 BE160L4**	**C612_8.8 P160 BX160L4**	180
184	745	2.8	8.0	14200				**C702_8.0 P160 BE160L4**	**C702_8.0 P160 BX160L4**	184
196	697	1.9	7.5	8760	**C612_7.5 S5 ME5LA4**	**C612_7.5 S5 MX5LA4**	179	**C612_7.5 P160 BE160L4**	**C612_7.5 P160 BX160L4**	180
197	695	3.0	7.5	14000	**C702_7.5 S5 ME5LA4**	**C702_7.5 S5 MX5LA4**	183	**C702_7.5 P160 BE160L4**	**C702_7.5 P160 BX160L4**	184
210	650	1.0	7.0	5800	**C512_7.0 S5 ME5LA4**	**C512_7.0 S5 MX5LA4**	175	**C512_7.0 P160 BE160L4**	**C512_7.0 P160 BX160L4**	176
218	628	2.2	6.7	8570	**C612_6.7 S5 ME5LA4**	**C612_6.7 S5 MX5LA4**	179	**C612_6.7 P160 BE160L4**	**C612_6.7 P160 BX160L4**	180
224	608	1.2	13.1	5760	**C512_13.1 S5 ME5SB2**		175	**C512_13.1 P160 BE160MB2**		176
243	560	2.4	12.1	8430	**C612_12.1 S5 ME5SB2**		179	**C612_12.1 P160 BE160MB2**		180
245	559	1.2	6.0	8130	**C612_6.0 S5 ME5LA4**	**C612_6.0 S5 MX5LA4**	179	**C612_6.0 P160 BE160L4**	**C612_6.0 P160 BX160L4**	180
248	548	1.4	11.8	5720	**C512_11.8 S5 ME5SB2**		175	**C512_11.8 P160 BE160MB2**		176
270	504	2.7	10.9	8230	**C612_10.9 S5 ME5SB2**		179	**C612_10.9 P160 BE160MB2**		180
299	454	3.0	9.8	8090	**C612_9.8 S5 ME5SB2**		179	**C612_9.8 P160 BE160MB2**		180
301	451	1.5	9.8	5570	**C512_9.8 S5 ME5SB2**		175	**C512_9.8 P160 BE160MB2**		176
323	424	1.6	4.6	7690	**C612_4.6 S5 ME5LA4**	**C612_4.6 S5 MX5LA4**	179	**C612_4.6 P160 BE160L4**	**C612_4.6 P160 BX160L4**	180
330	415	1.0	4.5	5250	**C512_4.5 S5 ME5LA4**	**C512_4.5 S5 MX5LA4**	175	**C512_4.5 P160 BE160L4**	**C512_4.5 P160 BX160L4**	176
333	409	3.3	8.8	7880	**C612_8.8 S5 ME5SB2**		179	**C612_8.8 P160 BE160MB2**		180
334	407	1.7	8.8	5490	**C512_8.8 S5 ME5SB2**		175	**C512_8.8 P160 BE160MB2**		176
379	359	1.8	7.8	5370	**C512_7.8 S5 ME5SB2**		175	**C512_7.8 P160 BE160MB2**		176
397	344	1.9	3.7	7370	**C612_3.7 S5 ME5LA4**	**C612_3.7 S5 MX5LA4**	179	**C612_3.7 P160 BE160L4**	**C612_3.7 P160 BX160L4**	180
421	323	1.9	7.0	5280	**C512_7.0 S5 ME5SB2**		175	**C512_7.0 P160 BE160MB2**		176
444	308	1.4	3.3	5080	**C512_3.3 S5 ME5LA4**	**C512_3.3 S5 MX5LA4**	175	**C512_3.3 P160 BE160L4**	**C512_3.3 P160 BX160L4**	176
490	278	2.4	6.0	7030	**C612_6.0 S5 ME5SB2**		179	**C612_6.0 P160 BE160MB2**		180
521	263	2.5	2.8	6940	**C612_2.8 S5 ME5LA4**	**C612_2.8 S5 MX5LA4**	179	**C612_2.8 P160 BE160L4**	**C612_2.8 P160 BX160L4**	180
522	261	1.7	5.6	4840	**C512_5.6 S5 ME5SB2**		175	**C512_5.6 P160 BE160MB2**		176
559	245	1.6	2.6	4940	**C512_2.6 S5 ME5LA4**	**C512_2.6 S5 MX5LA4**	175	**C512_2.6 P160 BE160L4**	**C512_2.6 P160 BX160L4**	176
645	211	3.2	4.6	6580	**C612_4.6 S5 ME5SB2**		179	**C612_4.6 P160 BE160MB2**		180
660	206	2.1	4.5	4630	**C512_4.5 S5 ME5SB2**		175	**C512_4.5 P160 BE160MB2**		176
889	153	2.7	3.3	4330	**C512_3.3 S5 ME5SB2**		175	**C512_3.3 P160 BE160MB2**		176
1118	122	3.3	2.6	4100	**C512_2.6 S5 ME5SB2**		175	**C512_2.6 P160 BE160MB2**		176

18.5 kW

n_2	M_2	S	i	R_{n2}	IE2	IE3		IE2	IEC IE3	
min-1	Nm			N						
13.1	12489	1.0	111.9	76600				**C1003_111.9 P180 BE180M4**	**C1003_111.9 P180 BX180M4**	193
14.7	11138	1.1	99.8	76700				**C1003_99.8 P180 BE180M4**	**C1003_99.8 P180 BX180M4**	193
15.9	10342	1.2	92.7	76700				**C1003_92.7 P180 BE180M4**	**C1003_92.7 P180 BX180M4**	193
17.2	9548	1.3	85.6	76400				**C1003_85.6 P180 BE180M4**	**C1003_85.6 P180 BX180M4**	193
18.5	8866	1.4	79.4	76100				**C1003_79.4 P180 BE180M4**	**C1003_79.4 P180 BX180M4**	193
21.2	7748	1.5	69.4	75400				**C1003_69.4 P180 BE180M4**	**C1003_69.4 P180 BX180M4**	193
22.8	7207	1.0	64.6	40300				**C903_64.6 P180 BE180M4**	**C903_64.6 P180 BX180M4**	190
22.8	7195	1.7	64.5	74800				**C1003_64.5 P180 BE180M4**	**C1003_64.5 P180 BX180M4**	193
24.8	6607	1.1	59.2	40500				**C903_59.2 P180 BE180M4**	**C903_59.2 P180 BX180M4**	190
25.6	6400	1.9	57.4	73700				**C1003_57.4 P180 BE180M4**	**C1003_57.4 P180 BX180M4**	193
26.8	6124	1.2	54.9	40700				**C903_54.9 P180 BE180M4**	**C903_54.9 P180 BX180M4**	190
27.6	5943	2.0	53.3	73100				**C1003_53.3 P180 BE180M4**	**C1003_53.3 P180 BX180M4**	193
29.2	5614	1.3	50.3	40700				**C903_50.3 P180 BE180M4**	**C903_50.3 P180 BX180M4**	190
32	5159	2.3	46.2	71600				**C1003_46.2 P180 BE180M4**	**C1003_46.2 P180 BX180M4**	193
34	4797	1.5	43.0	40600				**C903_43.0 P180 BE180M4**	**C903_43.0 P180 BX180M4**	190
34	4790	2.5	42.9	70800				**C1003_42.9 P180 BE180M4**	**C1003_42.9 P180 BX180M4**	193
37	4397	1.6	39.4	40500				**C903_39.4 P180 BE180M4**	**C903_39.4 P180 BX180M4**	190
40	4122	2.9	36.9	69000				**C1003_36.9 P180 BE180M4**	**C1003_36.9 P180 BX180M4**	193
42	4001	1.3	35.1	39800				**C902_35.1 P180 BE180M4**	**C902_35.1 P180 BX180M4**	190
43	3828	3.1	34.3	68100				**C1003_34.3 P180 BE180M4**	**C1003_34.3 P180 BX180M4**	193

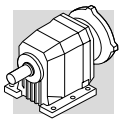

18.5 kW

n_2 min-1	M_2 Nm	S	i	R_{n2} N	IE2	IE3		IEC IE2	IEC IE3	
47	3572	1.0	31.3	25000				**C802_31.3 P180 BE180M4**	**C802_31.3 P180 BX180M4**	187
50	3298	2.8	29.6	65800				**C1002_29.6 P180 BE180M4**	**C1002_29.6 P180 BX180M4**	193
50	3356	1.8	29.4	39100				**C902_29.4 P180 BE180M4**	**C902_29.4 P180 BX180M4**	190
54	3098	1.8	27.2	38800				**C902_27.2 P180 BE180M4**	**C902_27.2 P180 BX180M4**	190
57	2958	1.3	25.9	25300				**C802_25.9 P180 BE180M4**	**C802_25.9 P180 BX180M4**	187
59	2830	2.3	24.8	38400				**C902_24.8 P180 BE180M4**	**C902_24.8 P180 BX180M4**	190
61	2731	1.3	24.0	25000				**C802_24.0 P180 BE180M4**	**C802_24.0 P180 BX180M4**	187
64	2613	2.4	22.9	37900				**C902_22.9 P180 BE180M4**	**C902_22.9 P180 BX180M4**	190
66	2536	1.5	22.2	25100				**C802_22.2 P180 BE180M4**	**C802_22.2 P180 BX180M4**	187
72	2341	1.5	20.5	24900				**C802_20.5 P180 BE180M4**	**C802_20.5 P180 BX180M4**	187
73	2307	2.9	20.2	37200				**C902_20.2 P180 BE180M4**	**C902_20.2 P180 BX180M4**	190
76	2198	1.0	19.3	14100				**C702_19.3 P180 BE180M4**	**C702_19.3 P180 BX180M4**	184
79	2130	2.9	18.7	36700				**C902_18.7 P180 BE180M4**	**C902_18.7 P180 BX180M4**	190
81	2058	1.8	18.1	24700				**C802_18.1 P180 BE180M4**	**C802_18.1 P180 BX180M4**	187
85	1973	3.3	17.3	36200				**C902_17.3 P180 BE180M4**	**C902_17.3 P180 BX180M4**	190
88	1904	1.1	16.7	13800				**C702_16.7 P180 BE180M4**	**C702_16.7 P180 BX180M4**	184
88	1900	1.8	16.7	24400				**C802_16.7 P180 BE180M4**	**C802_16.7 P180 BX180M4**	187
96	1748	1.2	15.3	13800				**C702_15.3 P180 BE180M4**	**C702_15.3 P180 BX180M4**	184
99	1700	2.2	14.9	24000				**C802_14.9 P180 BE180M4**	**C802_14.9 P180 BX180M4**	187
104	1607	1.3	14.1	13900				**C702_14.1 P180 BE180M4**	**C702_14.1 P180 BX180M4**	184
107	1569	2.2	13.8	23700				**C802_13.8 P180 BE180M4**	**C802_13.8 P180 BX180M4**	187
113	1485	1.4	13.0	13800				**C702_13.0 P180 BE180M4**	**C702_13.0 P180 BX180M4**	184
122	1378	1.0	12.1	8420				**C612_12.1 P180 BE180M4**	**C612_12.1 P180 BX180M4**	180
122	1370	2.7	12.0	23500				**C802_12.0 P180 BE180M4**	**C802_12.0 P180 BX180M4**	187
131	1278	1.7	11.2	13800				**C702_11.2 P180 BE180M4**	**C702_11.2 P180 BX180M4**	184
133	1265	2.8	11.1	22900				**C802_11.1 P180 BE180M4**	**C802_11.1 P180 BX180M4**	187
135	1241	1.1	10.9	8360				**C612_10.9 P180 BE180M4**	**C612_10.9 P180 BX180M4**	180
144	1164	1.8	10.2	13700				**C702_10.2 P180 BE180M4**	**C702_10.2 P180 BX180M4**	184
150	1119	1.2	9.8	8400				**C612_9.8 P180 BE180M4**	**C612_9.8 P180 BX180M4**	180
154	1086	2.0	9.5	13600				**C702_9.5 P180 BE180M4**	**C702_9.5 P180 BX180M4**	184
166	1008	1.3	8.8	8300				**C612_8.8 P180 BE180M4**	**C612_8.8 P180 BX180M4**	180
184	912	2.3	8.0	13500				**C702_8.0 P180 BE180M4**	**C702_8.0 P180 BX180M4**	184
196	853	1.6	7.5	8230				**C612_7.5 P180 BE180M4**	**C612_7.5 P180 BX180M4**	180
197	850	2.4	7.5	13400				**C702_7.5 P180 BE180M4**	**C702_7.5 P180 BX180M4**	184
218	768	1.8	6.7	8090				**C612_6.7 P180 BE180M4**	**C612_6.7 P180 BX180M4**	180
235	713	2.7	6.3	13300				**C702_6.3 P180 BE180M4**	**C702_6.3 P180 BX180M4**	184
245	684	1.0	6.0	7550				**C612_6.0 P180 BE180M4**	**C612_6.0 P180 BX180M4**	180
251	667	2.8	5.9	13200				**C702_5.9 P180 BE180M4**	**C702_5.9 P180 BX180M4**	184
270	621	2.2	10.9	7840	**C612_10.9 S5 ME5LA2**		179	**C612_10.9 P160 BE160L2**		180
300	560	2.4	9.8	7740	**C612_9.8 S5 ME5LA2**		179	**C612_9.8 P160 BE160L2**		180
302	556	1.2	9.8	5190	**C512_9.8 S5 ME5LA2**		175	**C512_9.8 P160 BE160L2**		176
322	521	3.3	4.6	13000				**C702_4.6 P180 BE180M4**	**C702_4.6 P180 BX180M4**	184
323	519	1.3	4.6	7300				**C612_4.6 P180 BE180M4**	**C612_4.6 P180 BX180M4**	180
333	504	2.7	8.8	7570	**C612_8.8 S5 ME5LA2**		179	**C612_8.8 P160 BE160L2**		180
335	501	1.4	8.8	5160	**C512_8.8 S5 ME5LA2**		175	**C512_8.8 P160 BE160L2**		176
380	442	1.4	7.8	5070	**C512_7.8 S5 ME5LA2**		175	**C512_7.8 P160 BE160L2**		176
393	427	3.2	7.5	7350	**C612_7.5 S5 ME5LA2**		179	**C612_7.5 P160 BE160L2**		180
397	422	1.6	3.7	7060				**C612_3.7 P180 BE180M4**	**C612_3.7 P180 BX180M4**	180
422	398	1.6	7.0	5010	**C512_7.0 S5 ME5LA2**		175	**C512_7.0 P160 BE160L2**		176
437	384	3.5	6.7	7170	**C612_6.7 S5 ME5LA2**		179	**C612_6.7 P160 BE160L2**		180
444	377	1.1	3.3	4750				**C512_3.3 P180 BE180M4**	**C512_3.3 P180 BX180M4**	176
491	342	1.9	6.0	6780	**C612_6 S5 ME5LA2**		179	**C612_6.0 P160 BE160L2**		180
521	321	2.1	2.8	6700				**C612_2.8 P180 BE180M4**		180
523	321	1.4	5.6	4580	**C512_5.6 S5 ME5LA2**		175	**C512_5.6 P160 BE160L2**		176
559	300	1.3	2.6	4600				**C512_2.6 P180 BE180M4**	**C512_2.6 P180 BX180M4**	176
646	260	2.6	4.6	6390	**C612_4.6 S5 ME5LA2**		179	**C612_4.6 P160 BE160L2**		180
661	254	1.7	4.5	4420	**C512_4.5 S5 ME5LA2**		175	**C512_4.5 P160 BE160L2**		176

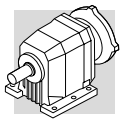

18.5 kW

n_2 min-1	M_2 Nm	S	i	R_{n2} N	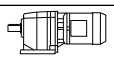 IE2	IE3		 IEC IE2	IE3	
796	211	3.2	3.7	6080	**C612_3.7 S5 ME5LA2**		179	**C612_3.7 P160 BE160L2**		180
890	188	2.2	3.3	4180	**C512_3.3 S5 ME5LA2**		175	**C512_3.3 P160 BE160L2**		176
1120	150	2.7	2.6	3980	**C512_2.6 S5 ME5LA2**		175	**C512_2.6 P160 BE160L2**		176

22 kW

n_2 min-1	M_2 Nm	S	i	R_{n2} N	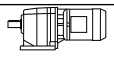		 IEC IE2	IE3	
14.7	13273	0.9	99.8	70600			**C1003_99.8 P180 BE180L4**	**C1003_99.8 P180 BX180L4**	193
15.9	12325	1.0	92.7	70900			**C1003_92.7 P180 BE180L4**	**C1003_92.7 P180 BX180L4**	193
17.2	11378	1.1	85.6	71100			**C1003_85.6 P180 BE180L4**	**C1003_85.6 P180 BX180L4**	193
18.5	10565	1.1	79.4	71200			**C1003_79.4 P180 BE180L4**	**C1003_79.4 P180 BX180L4**	193
21.2	9233	1.3	69.4	71000			**C1003_69.4 P180 BE180L4**	**C1003_69.4 P180 BX180L4**	193
22.8	8574	1.4	64.5	70800			**C1003_64.5 P180 BE180L4**	**C1003_64.5 P180 BX180L4**	193
24.8	7873	0.9	59.2	36700			**C903_59.2 P180 BE180L4**	**C903_59.2 P180 BX180L4**	190
25.6	7627	1.6	57.4	70300			**C1003_57.4 P180 BE180L4**	**C1003_57.4 P180 BX180L4**	193
26.8	7298	1.0	54.9	36000			**C903_54.9 P180 BE180L4**	**C903_54.9 P180 BX180L4**	190
27.6	7082	1.7	53.3	69800			**C1003_53.3 P180 BE180L4**	**C1003_53.3 P18 0BX180L4**	193
29.2	6690	1.1	50.3	37400			**C903_50.3 P180 BE180L4**	**C903_50.3 P180 BX180L4**	190
32	6147	2.0	46.2	68800			**C1003_46.2 P180 BE180L4**	**C1003_46.2 P180 BX180L4**	193
34	5716	1.3	43.0	37500			**C903_43.0 P180 BE180L4**	**C903_43.0 P180 BX180L4**	190
34	5708	2.1	42.9	68100			**C1003_42.9 P180 BE180L4**	**C1003_42.9 P180 BX180L4**	193
37	5240	1.4	39.4	37500			**C903_39.4 P180 BE180L4**	**C903_39.4 P180 BX180L4**	190
40	4912	2.4	36.9	66700			**C1003_36.9 P180 BE180L4**	**C1003_36.9 P180 BX180L4**	193
42	4768	1.1	35.1	37400			**C902_35.1 P180 BE180L4**	**C902_35.1 P180 BX180L4**	190
43	4561	2.6	34.3	65900			**C1003_34.3 P180 BE180L4**	**C1003_34.3 P180 BX180L4**	193
50	3931	2.3	29.6	64100			**C1002_29.6 P180 BE180L4**	**C1002_29.6 P180 BX180L4**	193
50	3999	1.5	29.4	37100			**C902_29.4 P180 BE180L4**	**C902_29.4 P180 BX180L4**	190
54	3691	1.5	27.2	36900			**C902_27.2 P180 BE180L4**	**C902_27.2 P180 BX180L4**	190
57	3525	1.0	25.9	23000			**C802_25.9 P180 BE180L4**	**C802_25.9 P180 BX180L4**	187
59	3373	2.0	24.8	36600			**C902_24.8 P180 BE180L4**	**C902_24.8 P180 BX180L4**	190
61	3254	1.1	24.0	23700			**C802_24.0 P180 BE180L4**	**C802_24.0 P180 BX180L4**	187
64	3113	2.0	22.9	36400			**C902_22.9 P180 BE180L4**	**C902_22.9 P180 BX180L4**	190
66	3022	1.2	22.2	23500			**C802_22.2 P180 BE180L4**	**C802_22.2 P180 BX180L4**	187
72	2789	1.3	20.5	23400			**C802_20.5 P180 BE180L4**	**C802_20.5 P180 BX180L4**	187
73	2749	2.4	20.2	35800			**C902_20.2 P180 BE180L4**	**C902_20.2 P180 BX180L4**	190
79	2538	2.4	18.7	35400			**C902_18.7 P180 BE180L4**	**C902_18.7 P180 BX180L4**	190
81	2452	1.5	18.1	23300			**C802_18.1 P180 BE180L4**	**C802_18.1 P180 BX180L4**	187
85	2352	2.8	17.3	34900			**C902_17.3 P180 BE180L4**	**C902_17.3 P180 BX180L4**	190
88	2269	0.9	16.7	12400			**C702_16.7 P180 BE180L4**	**C702_16.7 P180 BX180L4**	184
88	2264	1.5	16.7	23100			**C802_16.7 P180 BE180L4**	**C802_16.7 P180 BX180L4**	187
92	2171	2.9	16.0	34600			**C902_16.0 P180 BE180L4**	**C902_16.0 P180 BX180L4**	190
96	2083	1.0	15.3	12400			**C702_15.3 P180 BE180L4**	**C702_15.3 P180 BX180L4**	184
99	2026	1.8	14.9	22900			**C802_14.9 P180 BE180L4**	**C802_14.9 P180 BX180L4**	187
104	1915	1.1	14.1	12700			**C702_14.1 P180 BE180L4**	**C702_14.1 P180 BX180L4**	184
106	1882	3.2	13.9	33700			**C902_13.9 P180 BE180L4**	**C902_13.9 P180 BX180L4**	190
107	1870	1.9	13.8	22700			**C802_13.8 P180 BE180L4**	**C802_13.8 P180 BX180L4**	187
113	1770	1.2	13.0	12700			**C702_13.0 P180 BE180L4**	**C702_13.0 P180 BX180L4**	184
122	1633	2.3	12.0	22500			**C802_12.0 P180 BE180L4**	**C802_12.0 P180 BX180L4**	187
131	1523	1.4	11.2	12900			**C702_11.2 P180 BE180L4**	**C702_11.2 P180 BX180L4**	184
133	1507	2.3	11.1	22100			**C802_11.1 P180 BE180L4**	**C802_11.1 P180 BX180L4**	187
135	1479	0.9	10.9	7580			**C612_10.9 P180 BE180L4**	**C612_10.9 P180 BX180L4**	180
144	1387	1.5	10.2	12800			**C702_10.2 P180 BE180L4**	**C702_10.2 P180 BX180L4**	184
150	1334	1.0	9.8	7710			**C612_9.8 P180 BE180L4**	**C612_9.8 P180 BX180L4**	180
153	1305	2.8	9.6	21900			**C802_9.6 P180 BE180L4**	**C802_9.6 P180 BX180L4**	187
154	1294	1.7	9.5	12800			**C702_9.5 P180 BE180L4**	**C702_9.5 P180 BX180L4**	184
166	1204	2.9	8.9	21300			**C802_8.9 P180 BE180L4**	**C802_8.9 P180 BX180L4**	187
166	1201	1.1	8.8	7660			**C612_8.8 P180 BE180L4**	**C612_8.8 P180 BX180L4**	180
184	1087	1.9	8.0	12700			**C702_8.0 P180 BE180L4**	**C702_8.0 P180 BX180L4**	184
196	1017	1.3	7.5	7690			**C612_7.5 P180 BE180L4**	**C612_7.5 P180 BX180L4**	180
197	1013	2.0	7.5	12700			**C702_7.5 P180 BE180L4**	**C702_7.5 P180 BX180L4**	184
218	916	1.5	6.7	7600			**C612_6.7 P180 BE180L4**	**C612_6.7 P180 BX180L4**	180
235	850	2.3	6.3	12500			**C702_6.3 P180 BE180L4**	**C702_6.3 P180 BX180L4**	184

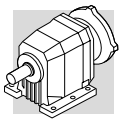

22 kW

n_2 min-1	M_2 Nm	S	i	R_{n2} N	IEC IE2	IEC IE3	
251	795	2.4	5.9	12300	**C702_5.9 P180 BE180L4**	**C702_5.9 P180 BX180L4**	184
322	621	2.7	4.6	11900	**C702_4.6 P180 BE180L4**	**C702_4.6 P180 BX180L4**	184
323	619	1.1	4.6	6910	**C612_4.6 P180 BE180L4**	**C612_4.6 P180 BX180L4**	180
397	503	1.3	3.7	6740	**C612_3.7 P180 BE180L4**	**C612_3.7 P180 BX180L4**	180
444	449	0.9	3.3	4350	**C512_3.3 P180 BE180L4**	**C512_3.3 P180 BX180L4**	176
521	383	1.7	2.8	6450	**C612_2.8 P180 BE180L4**	**C612_2.8 P180 BX180L4**	180
559	357	1.1	2.6	4290	**C512_2.6 P180 BE180L4**	**C512_2.6 P180 BX180L4**	176

30 kW

n_2 min-1	M_2 Nm	S	i	R_{n2} N	IEC IE3	
21.2	12584	1.0	69.4	61300	**C1003_69.4 P200 BX200LAK4**	193
25.6	10395	1.2	57.4	62200	**C1003_57.4 P200 BX200LAK4**	193
32	8379	1.4	46.2	62300	**C1003_46.2 P200 BX200LAK4**	193
37	7142	1.0	39.4	31900	**C903_39.4 P200 BX200LAK4**	190
50	5472	1.7	29.6	59800	**C1002_29.6 P200 BX200LAK4**	193
50	5450	1.1	29.4	32600	**C902_29.4 P200 BX200LAK4**	190
64	4243	1.5	22.9	32900	**C902_22.9 P200 BX200LAK4**	190
66	4119	2.4	22.2	57700	**C1002_22.2 P200 BX200LAK4**	193
79	3459	1.8	18.7	32600	**C902_18.7 P200 BX200LAK4**	190
79	3456	3.1	18.7	56000	**C1002_18.7 P200 BX200LAK4**	193
99	2761	1.3	14.9	20600	**C802_14.9 P200 BX200LAK4**	187
106	2566	2.4	13.9	31500	**C902_13.9 P200 BX200LAK4**	190
122	2225	1.7	12.0	20500	**C802_12.0 P200 BX200LAK4**	187
131	2079	2.7	11.2	30600	**C902_11.2 P200 BX200LAK4**	190
153	1778	2.1	9.6	20100	**C802_9.6 P200 BX200LAK4**	187
154	1763	1.2	9.5	11000	**C702_9.5 P200 BX200LAK4**	184
184	1482	1.4	8.0	11600	**C702_8.0 P200 BX200LAK4**	184
193	1412	2.4	7.6	19500	**C802_7.6 P200 BX200LAK4**	187
209	1303	2.6	7.0	19300	**C802_7.0 P200 BX200LAK4**	187
235	1158	1.7	6.3	11500	**C702_6.3 P200 BX200LAK4**	184
241	1131	2.8	6.1	18900	**C802_6.1 P200 BX200LAK4**	187
261	1044	3.0	5.6	18600	**C802_5.6 P200 BX200LAK4**	187
322	846	2.0	4.6	11000	**C702_4.6 P200 BX200LAK4**	184

37 kW

n_2 min-1	M_2 Nm	S	i	R_{n2} N	IEC IE3	
25.8	12734	0.9	57.4	55300	**C1003_57.4 P225 BX225SAK4**	193
32	10264	1.2	46.2	56600	**C1003_46.2 P225 BX225SAK4**	193
40	8201	1.4	36.9	57000	**C1003_36.9 P225 BX225SAK4**	193
60	5631	1.2	24.8	29500	**C902_24.8 P225 BX225SAK4**	190
61	5467	2.0	24.1	55200	**C1002_24.1 P225 BX225SAK4**	193
79	4237	1.5	18.7	30100	**C902_18.7 P225 BX225SAK4**	190
79	4234	2.5	18.7	53600	**C1002_18.7 P225 BX225SAK4**	193
89	3779	0.9	16.7	18500	**C802_16.7 P225 BX225SAK4**	187
107	3143	1.9	13.9	29700	**C902_13.9 P225 BX225SAK4**	190
108	3122	1.1	13.8	18800	**C802_13.8 P225 BX225SAK4**	187
123	2726	1.4	12.0	18800	**C802_12.0 P225 BX225SAK4**	187
132	2546	2.2	11.2	29100	**C902_11.2 P225 BX225SAK4**	190
154	2178	1.7	9.6	18800	**C802_9.6 P225 BX225SAK4**	187
164	2046	2.5	9.0	28300	**C902_9.0 P225 BX225SAK4**	190
194	1730	2.0	7.6	18500	**C802_7.6 P225 BX225SAK4**	187
202	1661	2.9	7.3	27400	**C902_7.3 P225 BX225SAK4**	190
242	1386	2.3	6.1	18000	**C802_6.1 P225 BX225SAK4**	187
264	1271	3.5	5.6	26100	**C902_5.6 P225 BX225SAK4**	190
286	1173	3.7	5.2	25700	**C902_5.2 P225 BX225SAK4**	190

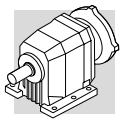

45 kW

n_2 min-1	M_2 Nm	S	i	R_{n2} N			IEC IE3	
32	12483	1.0	46.2	50200			**C1003_46.2 P225 BX225SBK4**	193
40	9974	1.2	36.9	51900			**C1003_36.9 P225 BX225SBK4**	193
50	8153	1.1	29.6	51900			**C1002_29.6 P225 BX225SBK4**	193
65	6322	1.0	22.9	26400			**C902_22.9 P225 BX225SBK4**	190
67	6137	1.6	22.2	51700			**C1002_22.2 P225 BX225SBK4**	193
79	5153	1.2	18.7	27200			**C902_18.7 P225 BX225SBK4**	190
79	5149	2.1	18.7	51000			**C1002_18.7 P225 BX225SBK4**	193
107	3822	1.6	13.9	27600			**C902_13.9 P225 BX225SBK4**	190
108	3797	0.9	13.8	16700			**C802_13.8 P225 BX225SBK4**	187
123	3315	1.1	12.0	17000			**C802_12.0 P225 BX225SBK4**	187
132	3097	1.8	11.2	27400			**C902_11.2 P225 BX225SBK4**	190
154	2649	1.4	9.6	17300			**C802_9.6 P225 BX225SBK4**	187
164	2488	2.1	9.0	26900			**C902_9.0 P225 BX225SBK4**	190
194	2104	1.6	7.6	17300			**C802_7.6 P225 BX225SBK4**	187
202	2020	2.4	7.3	26300			**C902_7.3 P225 BX225SBK4**	190
262	1556	2.0	5.6	17000			**C802_5.6 P225 BX225SBK4**	187
264	1546	2.8	5.6	25200			**C902_5.6 P225 BX225SBK4**	190
279	1464	2.9	5.2	25200			**C902_5.2 P225 BX225SBK4**	190

55 kW

n_2 min-1	M_2 Nm	S	i	R_{n2} N			IEC IE3	
40	12191	1.0	36.9	45400			**C1003_36.9 P250 BX250MAK4**	193
50	9965	0.9	29.6	46700			**C1002_29.6 P250 BX250MAK4**	193
61	8126	1.3	24.1	47500			**C1002_24.1 P250 BX250MAK4**	193
79	6298	1.0	18.7	22200			**C902_18.7 P250 BX250MAK4**	190
79	6294	1.7	18.7	47700			**C1002_18.7 P250 BX250MAK4**	193
107	4672	1.3	13.9	24900			**C902_13.9 P250 BX250MAK4**	190
110	4549	2.1	13.5	46500			**C1002_13.5 P250 BX250MAK4**	193
135	3686	2.4	10.9	45400			**C1002_10.9 P250 BX250MAK4**	193
164	3050	2.7	9.0	44100			**C1002_9.0 P250 BX250MAK4**	193
164	3041	1.7	9.0	25200			**C902_9.0 P250 BX250MAK4**	190
202	2468	2.0	7.3	24900			**C902_7.3 P250 BX250MAK4**	190
209	2383	3.2	7.1	42300			**C1002_7.1 P250 BX250MAK4**	193
264	1889	2.3	5.6	24200			**C902_5.6 P250 BX250MAK4**	190
286	1744	2.5	5.2	24000			**C902_5.2 P250 BX250MAK4**	190

75 kW

n_2 min-1	M_2 Nm	S	i	R_{n2} N			IEC IE3	IE4	
62	11044	1.0	24.1	38100			**C1002_24.1 P280 BX280SAK4**	**C1002_24.1 P280 BY280SCK4**	193
67	10194	1.0	22.2	40000			**C1002_22.2 P280 BX280SAK4**	**C1002_22.2 P280 BY280SCK4**	193
73	9266	1.2	20.2	40500			**C1002_20.2 P280 BX280SAK4**	**C1002_20.2 P280 BY280SCK4**	193
80	8553	1.3	18.7	41100			**C1002_18.7 P280 BX280SAK4**	**C1002_18.7 P280 BY280SCK4**	193
90	7552	1.3	16.5	41400			**C1002_16.5 P280 BX280SAK4**	**C1002_16.5 P280 BY280SCK4**	193
98	6971	1.4	15.2	41800			**C1002_15.2 P280 BX280SAK4**	**C1002_15.2 P280 BY280SCK4**	193
110	6182	1.5	13.5	41700			**C1002_13.5 P280 BX280SAK4**	**C1002_13.5 P280 BY280SCK4**	193
119	5707	1.6	12.5	41800			**C1002_12.5 P280 BX280SAK4**	**C1002_12.5 P280 BY280SCK4**	193
136	5010	1.8	10.9	41500			**C1002_10.9 P280 BX280SAK4**	**C1002_10.9 P280 BY280SCK4**	193
147	4624	1.9	10.1	41400			**C1002_10.1 P280 BX280SAK4**	**C1002_10.1 P280 BY280SCK4**	193
164	4146	2.0	9.0	40900			**C1002_9.0 P280 BX280SAK4**	**C1002_9.0 P280 BY280SCK4**	193
178	3827	2.1	8.4	40600			**C1002_8.4 P280 BX280SAK4**	**C1002_8.4 P280 BY280SCK4**	193
210	3238	2.4	7.1	39700			**C1002_7.1 P280 BX280SAK4**	**C1002_7.1 P280 BY280SCK4**	193
228	2989	2.5	6.5	39300			**C1002_6.5 P280 BX280SAK4**	**C1002_6.5 P280 BY280SCK4**	193
278	2444	2.8	5.3	38100			**C1002_5.3 P280 BX280SAK4**	**C1002_5.3 P280 BY280SCK4**	193
302	2256	3.0	4.9	37600			**C1002_4.9 P280 BX280SAK4**	**C1002_4.9 P280 BY280SCK4**	193

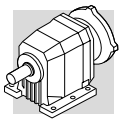

90 kW

n_2 min-1	M_2 Nm	S	i	R_{n2} N			IEC IE3	IEC IE4	
73	11119	1.0	20.2	30600			**C1002_20.2 P280 BX280SBK4**	**C1002_20.2 P280 BY280MAK4**	193
80	10264	1.0	18.7	35500			**C1002_18.7 P280 BX280SBK4**	**C1002_18.7 P280 BY280MAK4**	193
90	9062	1.1	16.5	37100			**C1002_16.5 P280 BX280SBK4**	**C1002_16.5 P280 BY280MAK4**	193
98	8365	1.2	15.2	37800			**C1002_15.2 P280 BX280SBK4**	**C1002_15.2 P280 BY280MAK4**	193
110	7419	1.3	13.5	38100			**C1002_13.5 P280 BX280SBK4**	**C1002_13.5 P280 BY280MAK4**	193
119	6848	1.4	12.5	38500			**C1002_12.5 P280 BX280SBK4**	**C1002_12.5 P280 BY280MAK4**	193
136	6012	1.5	10.9	38600			**C1002_10.9 P280 BX280SBK4**	**C1002_10.9 P280 BY280MAK4**	193
147	5549	1.6	10.1	38700			**C1002_10.1 P280 BX280SBK4**	**C1002_10.1 P280 BY280MAK4**	193
164	4975	1.7	9.0	38500			**C1002_9.0 P280 BX280SBK4**	**C1002_9.0 P280 BY280MAK4**	193
178	4592	1.8	8.4	38400			**C1002_8.4 P280 BX280SBK4**	**C1002_8.4 P280 BY280MAK4**	193
210	3886	2.0	7.1	37800			**C1002_7.1 P280 BX280SBK4**	**C1002_7.1 P280 BY280MAK4**	193
228	3587	2.1	6.5	37600			**C1002_6.5 P280 BX280SBK4**	**C1002_6.5 P280 BY280MAK4**	193
278	2933	2.4	5.3	36600			**C1002_5.3 P280 BX280SBK4**	**C1002_5.3 P280 BY280MAK4**	193
302	2707	2.5	4.9	36300			**C1002_4.9 P280 BX280SBK4**	**C1002_4.9 P280 BY280MAK4**	193

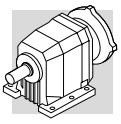

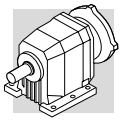

26 GEARBOX RATING CHARTS

C 12 — 100 Nm

	i	n_1 = 2800 min^{-1}					n_1 = 1400 min^{-1}					
		n_2 min^{-1}	M_{n2} Nm	P_{n1} kW	R_{n1} N	R_{n2} N	n_2 min^{-1}	M_{n2} Nm	P_{n1} kW	R_{n1} N	R_{n2} N	
C 12 2_2.8	2.8	1012	30	3.3	750	600	506	37	2.1	990	790	
C 12 2_3.2	3.2	873	32	3.1	730	600	436	40	1.9	960	790	
C 12 2_3.7	3.7	767	34	2.9	720	610	383	42	1.8	960	800	
C 12 2_4.3	4.3	649	36	2.6	710	630	325	45	1.6	890	800	
C 12 2_4.9	4.9	575	38	2.4	710	640	288	48	1.5	880	800	
C 12 2_5.6	5.6	500	40	2.2	680	650	250	51	1.4	840	810	
C 12 2_6.2	6.2	449	42	2.1	650	660	225	53	1.3	810	830	
C 12 2_7.6	7.6	367	45	1.8	1140	1220	184	56	1.1	1300	1540	
C 12 2_8.8	8.8	317	47	1.6	1140	1280	158	59	1.0	1300	1620	
C 12 2_10.1	10.1	278	49	1.5	1150	1340	139	63	0.97	1300	1680	
C 12 2_11.9	11.9	236	53	1.4	1140	1390	118	67	0.87	1300	1760	
C 12 2_13.4	13.4	209	55	1.3	1140	1460	104	70	0.81	1300	1840	
C 12 2_15.4	15.4	182	58	1.2	1130	1500	91	73	0.73	1300	1930	145
C 12 2_17.2	17.2	163	60	1.1	1130	1590	82	76	0.68	1300	2000	
C 12 2_18.4	18.4	152	62	1.0	1120	1620	76	78	0.65	1300	2000	
C 12 2_20.6	20.6	136	65	1.0	1110	1670	68	82	0.61	1300	2000	
C 12 2_23.2	23.2	120	67	0.89	1110	1720	60	85	0.56	1300	2000	
C 12 2_25.4	25.4	110	69	0.84	1110	1800	55	88	0.54	1300	2000	
C 12 2_29.5	29.5	95	74	0.77	1100	1880	47	93	0.49	1300	2000	
C 12 2_32.8	32.8	85	75	0.71	1090	1970	43	90	0.42	1300	2000	
C 12 2_37.0	37.0	76	79	0.66	1070	2000	38	90	0.38	1300	2000	
C 12 2_42.3	42.3	66	84	0.61	1060	2000	33	100	0.36	1300	2000	
C 12 2_47.6	47.6	59	85	0.55	1050	2000	29.4	90	0.29	1300	2000	
C 12 2_55.2	55.2	51	89	0.50	1030	2000	25.4	90	0.25	1300	2000	
C 12 2_66.2	66.2	42	86	0.40	1060	2000	21.2	90	0.21	1300	2000	

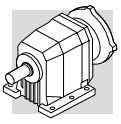

C 12 — 100 Nm

	i	n_1 = 900 min^{-1}					n_1 = 500 min^{-1}					
		n_2 min^{-1}	M_{n2} Nm	P_{n1} kW	R_{n1} N	R_{n2} N	n_2 min^{-1}	M_{n2} Nm	P_{n1} kW	R_{n1} N	R_{n2} N	
C 12 2_2.8	2.8	325	43	1.5	1140	910	181	53	1.1	1300	1080	
C 12 2_3.2	3.2	281	46	1.4	1100	910	156	57	1.0	1300	1080	
C 12 2_3.7	3.7	246	49	1.3	1090	920	137	60	0.91	1300	1100	
C 12 2_4.3	4.3	209	52	1.2	1050	920	116	64	0.82	1280	1100	
C 12 2_4.9	4.9	185	55	1.1	1050	960	103	67	0.76	1280	1160	
C 12 2_5.6	5.6	161	58	1.0	1000	980	89	69	0.68	1300	1280	
C 12 2_6.2	6.2	144	61	1.0	960	980	80	70	0.62	1300	1390	
C 12 2_7.6	7.6	118	65	0.85	1300	1780	66	79	0.57	1300	2000	
C 12 2_8.8	8.8	102	69	0.77	1300	1830	57	84	0.52	1300	2000	
C 12 2_10.1	10.1	89	72	0.71	1300	1950	50	88	0.48	1300	2000	
C 12 2_11.9	11.9	76	77	0.64	1300	2000	42	89	0.41	1300	2000	
C 12 2_13.4	13.4	67	81	0.60	1300	2000	37	90	0.37	1300	2000	
C 12 2_15.4	15.4	58	85	0.55	1300	2000	32	89	0.32	1300	2000	145
C 12 2_17.2	17.2	52	88	0.51	1300	2000	29.1	90	0.29	1300	2000	
C 12 2_18.4	18.4	49	88	0.47	1300	2000	27.2	89	0.27	1300	2000	
C 12 2_20.6	20.6	44	89	0.43	1300	2000	24.2	89	0.24	1300	2000	
C 12 2_23.2	23.2	39	89	0.38	1300	2000	21.5	89	0.21	1300	2000	
C 12 2_25.4	25.4	35	89	0.35	1300	2000	19.7	89	0.19	1300	2000	
C 12 2_29.5	29.5	31	100	0.34	1300	2000	16.9	100	0.19	1300	2000	
C 12 2_32.8	32.8	27.5	90	0.27	1300	2000	15.3	90	0.15	1300	2000	
C 12 2_37.0	37.0	24.3	90	0.24	1300	2000	13.5	90	0.13	1300	2000	
C 12 2_42.3	42.3	21.3	100	0.23	1300	2000	11.8	100	0.13	1300	2000	
C 12 2_47.6	47.6	18.9	90	0.19	1300	2000	10.5	90	0.10	1300	2000	
C 12 2_55.2	55.2	16.3	90	0.16	1300	2000	9.1	90	0.09	1300	2000	
C 12 2_66.2	66.2	13.6	90	0.13	1300	2000	7.6	90	0.07	1300	2000	

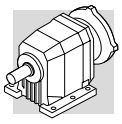

C 22 — 200 Nm

	i	n_1 = 2800 min^{-1}					n_1 = 1400 min^{-1}					
		n_2 min^{-1}	M_{n2} Nm	P_{n1} kW	R_{n1} N	R_{n2} N	n_2 min^{-1}	M_{n2} Nm	P_{n1} kW	R_{n1} N	R_{n2} N	
C 22 2_2.7	2.7	1029	65	7.4	—	1150	514	80	4.5	—	1460	
C 22 2_3.3	3.3	842	68	6.3	—	1230	421	85	3.9	—	1560	
C 22 2_3.7	3.7	755	70	5.8	—	1290	378	90	3.7	—	1610	
C 22 2_4.3	4.3	658	75	5.4	—	1320	329	94	3.4	—	1650	
C 22 2_4.8	4.8	587	80	5.2	—	1370	294	100	3.2	—	1730	
C 22 2_5.6	5.6	501	82	4.5	—	1410	250	102	2.8	—	1790	
C 22 2_6.1	6.1	460	85	4.3	—	1500	230	105	2.7	—	1900	
C 22 2_7.1	7.1	395	105	4.6	1090	1570	198	130	2.8	1420	1990	
C 22 2_8.7	8.7	324	110	3.9	1130	1680	162	138	2.5	1430	2090	
C 22 2_9.6	9.6	290	115	3.7	1160	1750	145	145	2.3	1460	2200	
C 22 2_11.1	11.1	253	120	3.3	1130	1820	126	153	2.1	1390	2270	
C 22 2_12.4	12.4	226	125	3.1	1160	1900	113	160	2.0	1420	2380	
C 22 2_14.5	14.5	193	133	2.8	1090	1980	96	168	1.8	1360	2450	
C 22 2_15.8	15.8	177	140	2.7	1030	2030	88	175	1.7	1320	2570	
C 22 2_18.1	18.1	154	145	2.5	1000	2140	77	183	1.6	1250	2650	
C 22 2_20.0	20.0	140	150	2.3	1000	2210	70	190	1.5	1250	2770	
C 22 2_21.5	21.5	131	153	2.2	970	2250	65	194	1.4	1190	2820	
C 22 2_24.3	24.3	115	160	2.0	980	2350	58	200	1.3	1250	2970	
C 22 2_27.2	27.2	103	166	1.9	960	2420	52	200	1.1	1340	3110	
C 22 2_29.6	29.6	95	175	1.8	850	2490	47	200	1.0	1350	3270	
C 22 2_33.1	33.1	85	178	1.7	840	2590	42	200	0.93	1390	3400	149
C 22 2_36.8	36.8	76	185	1.6	750	2690	38	200	0.84	1400	3610	
C 22 2_43.3	43.3	65	185	1.3	830	2910	32	190	0.68	1610	3950	
C 22 2_48.6	48.6	58	150	0.95	1300	3300	28.8	155	0.49	1740	4400	
C 22 2_54.7	54.7	51	150	0.85	1320	3470	25.6	155	0.44	1770	4600	
C 22 2_63.3	63.3	44	125	0.61	1400	3860	22.1	130	0.32	1820	5000	
C 22 3_60.0	60.0	47	180	0.93	840	3400	23.3	190	0.49	1230	4500	
C 22 3_65.3	65.3	43	200	0.94	880	3440	21.4	200	0.47	1270	4670	
C 22 3_74.8	74.8	37	200	0.83	940	3600	18.7	200	0.41	1270	4800	
C 22 3_82.6	82.6	34	200	0.75	1010	3820	16.9	200	0.37	1300	5000	
C 22 3_88.5	88.5	32	200	0.70	1040	3900	15.8	200	0.35	1300	5000	
C 22 3_100.2	100.2	28.0	200	0.62	1090	4160	14.0	200	0.31	1300	5000	
C 22 3_112.0	112.0	25.0	200	0.55	1130	4300	12.5	200	0.28	1300	5000	
C 22 3_122.2	122.2	22.9	200	0.51	1160	4540	11.5	200	0.25	1300	5000	
C 22 3_136.5	136.5	20.5	200	0.45	1180	4700	10.3	200	0.23	1300	5000	
C 22 3_151.7	151.7	18.5	200	0.41	1220	4980	9.2	200	0.20	1300	5000	
C 22 3_178.5	178.5	15.7	200	0.35	1260	5000	7.8	200	0.17	1300	5000	
C 22 3_200.7	200.7	14.0	190	0.29	1280	5000	7.0	190	0.15	1300	5000	
C 22 3_225.8	225.8	12.4	180	0.25	1300	5000	6.2	185	0.13	1300	5000	
C 22 3_261.0	261.0	10.7	145	0.17	1300	5000	5.4	155	0.09	1300	5000	

(—) Contact our technical service department advising radial load data (rotation direction, orientation, position)

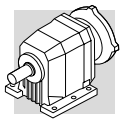

C 22 — 200 Nm

	i	n_1 = 900 min^{-1}					n_1 = 500 min^{-1}					
		n_2 min^{-1}	M_{n2} Nm	P_{n1} kW	R_{n1} N	R_{n2} N	n_2 min^{-1}	M_{n2} Nm	P_{n1} kW	R_{n1} N	R_{n2} N	
C 22 2_2.7	2.7	331	95	3.5	—	1670	184	100	2.0	400	2150	
C 22 2_3.3	3.3	271	100	3.0	—	1760	150	103	1.7	570	2300	
C 22 2_3.7	3.7	243	105	2.8	—	1850	135	105	1.6	800	2430	
C 22 2_4.3	4.3	211	105	2.4	—	1980	117	105	1.4	940	2550	
C 22 2_4.8	4.8	189	105	2.2	170	2090	105	105	1.2	1200	2710	
C 22 2_5.6	5.6	161	105	1.9	200	2250	89	112	1.1	1020	2850	
C 22 2_6.1	6.1	148	110	1.8	200	2290	82	116	1.1	980	2930	
C 22 2_7.1	7.1	127	150	2.1	1650	2310	71	180	1.4	2060	2820	
C 22 2_8.7	8.7	104	160	1.8	1650	2440	58	190	1.2	2100	3000	
C 22 2_9.6	9.6	93	170	1.7	1650	2530	52	200	1.1	2130	3130	
C 22 2_11.1	11.1	81	176	1.6	1640	2650	45	200	0.99	2170	3270	
C 22 2_12.4	12.4	73	185	1.5	1650	2760	40	200	0.89	2200	3520	
C 22 2_14.5	14.5	62	193	1.3	1610	2850	34	200	0.76	2200	3670	
C 22 2_15.8	15.8	57	200	1.3	1580	2990	32	200	0.70	2200	3920	
C 22 2_18.1	18.1	50	200	1.1	1650	3150	27.6	200	0.61	2200	4200	
C 22 2_20.0	20.0	45	200	0.99	1750	3340	25.0	200	0.55	2200	4350	
C 22 2_21.5	21.5	42	200	0.92	1760	3450	23.3	200	0.51	2200	4550	
C 22 2_24.3	24.3	37	200	0.82	1900	3650	20.6	200	0.45	2200	4720	
C 22 2_27.2	27.2	33	200	0.73	1950	3820	18.4	200	0.41	2200	5000	
C 22 2_29.6	29.6	30	200	0.67	1980	3990	16.9	200	0.37	2200	5000	
C 22 2_33.1	33.1	27.2	200	0.60	1970	4200	15.1	200	0.33	2200	5000	149
C 22 2_36.8	36.8	24.5	200	0.54	1990	4390	13.6	200	0.30	2200	5000	
C 22 2_43.3	43.3	20.8	190	0.44	2020	4770	11.6	190	0.24	2200	5000	
C 22 2_48.6	48.6	18.5	160	0.33	2050	5000	10.3	170	0.19	2200	5000	
C 22 2_54.7	54.7	16.4	160	0.29	2090	5000	9.1	170	0.17	2200	5000	
C 22 2_63.3	63.3	14.2	135	0.21	2140	5000	7.9	140	0.12	2200	5000	
C 22 3_60.0	60.0	15.0	190	0.31	1300	5000	8.3	200	0.18	1300	5000	
C 22 3_65.3	65.3	13.8	200	0.31	1300	5000	7.7	200	0.17	1300	5000	
C 22 3_74.8	74.8	12.0	200	0.27	1300	5000	6.7	200	0.15	1300	5000	
C 22 3_82.6	82.6	10.9	200	0.25	1300	5000	6.1	200	0.14	1300	5000	
C 22 3_88.5	88.5	10.2	200	0.22	1300	5000	5.6	200	0.12	1300	5000	
C 22 3_100.2	100.2	9.0	200	0.20	1300	5000	5.0	200	0.11	1300	5000	
C 22 3_112.0	112.0	8.0	200	0.18	1300	5000	4.5	200	0.10	1300	5000	
C 22 3_122.2	122.2	7.4	200	0.17	1300	5000	4.1	200	0.09	1300	5000	
C 22 3_136.5	136.5	6.6	200	0.15	1300	5000	3.7	200	0.08	1300	5000	
C 22 3_151.7	151.7	5.9	200	0.13	1300	5000	3.3	200	0.07	1300	5000	
C 22 3_178.5	178.5	5.0	200	0.11	1300	5000	2.8	200	0.06	1300	5000	
C 22 3_200.7	200.7	4.5	195	0.10	1300	5000	2.5	200	0.05	1300	5000	
C 22 3_225.8	225.8	4.0	195	0.09	1300	5000	2.2	200	0.05	1300	5000	
C 22 3_261.0	261.0	3.4	160	0.06	1300	5000	1.9	165	0.04	1300	5000	

(—) Contact our technical service department advising radial load data (rotation direction, orientation, position)

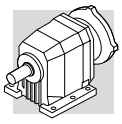

C 32 — 300 Nm

	i	n_1 = 2800 min^{-1}					n_1 = 1400 min^{-1}					
		n_2 min^{-1}	M_{n2} Nm	P_{n1} kW	R_{n1} N	R_{n2} N	n_2 min^{-1}	M_{n2} Nm	P_{n1} kW	R_{n1} N	R_{n2} N	
C 32 2_2.9	2.9	973	105	11.3	670	1710	486	130	7.0	940	2170	
C 32 2_3.4	3.4	821	116	10.5	480	1770	411	138	6.2	900	2280	
C 32 2_3.7	3.7	750	120	9.9	560	1830	375	150	6.2	750	2310	
C 32 2_4.5	4.5	622	129	8.8	450	1930	311	152	5.2	970	2500	
C 32 2_5.0	5.0	565	135	8.4	470	1990	283	155	4.8	1100	2600	
C 32 2_5.7	5.7	495	141	7.7	380	2080	248	155	4.2	1250	2760	
C 32 2_6.3	6.3	447	150	7.4	300	2130	223	155	3.8	1450	2890	
C 32 2_7.2	7.2	391	160	6.9	1890	2370	195	200	4.3	2200	2990	
C 32 2_8.5	8.5	330	168	6.1	1900	2510	165	209	3.8	2200	3180	
C 32 2_9.3	9.3	301	175	5.8	1910	2580	151	220	3.7	2200	3260	
C 32 2_11.2	11.2	250	187	5.2	1910	2740	125	231	3.2	2200	3480	
C 32 2_12.3	12.3	227	195	4.9	1910	2820	114	245	3.1	2200	3560	
C 32 2_14.1	14.1	199	205	4.5	1900	2940	99	251	2.8	2200	3750	
C 32 2_15.6	15.6	180	215	4.3	1900	3030	90	270	2.7	2200	3820	
C 32 2_18.2	18.2	154	223	3.8	1900	3210	77	275	2.3	2200	4070	
C 32 2_20.1	20.1	139	235	3.6	1900	3290	70	295	2.3	2200	4160	
C 32 2_22.9	22.9	122	240	3.2	1880	3470	61	295	2.0	2200	4400	
C 32 2_25.1	25.1	111	250	3.1	1890	3560	56	300	1.8	2200	4570	
C 32 2_26.9	26.9	104	255	2.9	1880	3650	52	300	1.7	2200	4700	
C 32 2_29.8	29.8	94	265	2.7	1880	3770	47	300	1.6	2200	4920	
C 32 2_33.1	33.1	85	270	2.5	1880	3920	42	300	1.4	2200	5150	153
C 32 2_36.1	36.1	78	280	2.4	1870	4030	39	300	1.3	2200	5350	
C 32 2_40.7	40.7	69	290	2.2	1860	4200	34	300	1.1	2200	5500	
C 32 2_45.3	45.3	62	300	2.0	1860	4360	31	300	1.0	2200	5500	
C 32 2_52.4	52.4	53	300	1.8	1860	4650	26.7	300	0.88	2200	5500	
C 32 2_59.4	59.4	47	205	1.1	2020	5000	23.6	215	0.56	2200	5500	
C 32 2_66.8	66.8	42	205	0.95	2020	5500	21.0	215	0.50	2200	5500	
C 32 3_74.7	74.7	37	280	1.2	750	5500	18.7	290	0.60	1170	5500	
C 32 3_82.6	82.6	34	300	1.1	820	5500	17.0	300	0.56	1240	5500	
C 32 3_94.2	94.2	29.7	300	0.98	900	5500	14.9	300	0.49	1270	5500	
C 32 3_103.3	103.3	27.1	300	0.90	980	5500	13.6	300	0.45	1300	5500	
C 32 3_110.6	110.6	25.3	300	0.84	1000	5500	12.7	300	0.42	1300	5500	
C 32 3_122.4	122.4	22.9	300	0.76	1060	5500	11.4	300	0.38	1300	5500	
C 32 3_136.0	136.0	20.6	300	0.68	1110	5500	10.3	300	0.34	1300	5500	
C 32 3_148.4	148.4	18.9	300	0.62	1130	5500	9.4	300	0.31	1300	5500	
C 32 3_167.4	167.4	16.7	300	0.55	1180	5500	8.4	300	0.28	1300	5500	
C 32 3_186.0	186.0	15.1	300	0.50	1200	5500	7.5	300	0.25	1300	5500	
C 32 3_215.6	215.6	13.0	300	0.43	1240	5500	6.5	300	0.21	1300	5500	
C 32 3_244.2	244.2	11.5	240	0.30	1280	5500	5.7	255	0.16	1300	5500	
C 32 3_274.7	274.7	10.2	240	0.27	1300	5500	5.1	255	0.14	1300	5500	

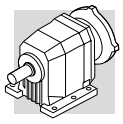

C 32 — 300 Nm

	i	n_1 = 900 min^{-1}					n_1 = 500 min^{-1}					
		n_2 min^{-1}	M_{n2} Nm	P_{n1} kW	R_{n1} N	R_{n2} N	n_2 min^{-1}	M_{n2} Nm	P_{n1} kW	R_{n1} N	R_{n2} N	
C 32 2_2.9	2.9	313	150	5.2	1120	2510	174	155	3.0	2200	3220	
C 32 2_3.4	3.4	264	152	4.4	1390	2690	147	167	2.7	2200	3390	
C 32 2_3.7	3.7	241	155	4.1	1570	2790	134	175	2.6	2200	3480	
C 32 2_4.5	4.5	200	158	3.5	1750	3010	111	188	2.3	2200	3690	
C 32 2_5.0	5.0	182	162	3.2	1870	3120	101	198	2.2	2200	3790	
C 32 2_5.7	5.7	159	171	3.0	1730	3250	88	198	1.9	2200	4010	
C 32 2_6.3	6.3	144	178	2.8	1730	3350	80	200	1.8	2200	4180	
C 32 2_7.2	7.2	126	235	3.3	2200	3450	70	285	2.2	2200	4200	
C 32 2_8.5	8.5	106	246	2.9	2200	3660	59	288	1.9	2200	4520	
C 32 2_9.3	9.3	97	260	2.8	2200	3750	54	300	1.8	2200	4640	
C 32 2_11.2	11.2	80	272	2.4	2200	4010	45	300	1.5	2200	5030	
C 32 2_12.3	12.3	73	285	2.3	2200	4120	41	300	1.3	2200	5250	
C 32 2_14.1	14.1	64	290	2.0	2200	4340	36	300	1.2	2200	5500	
C 32 2_15.6	15.6	58	300	1.9	2200	4500	32	300	1.1	2200	5500	
C 32 2_18.2	18.2	50	300	1.6	2200	4810	27.5	300	0.91	2200	5500	
C 32 2_20.1	20.1	45	300	1.5	2200	5030	24.9	300	0.82	2200	5500	
C 32 2_22.9	22.9	39	300	1.3	2200	5300	21.8	300	0.72	2200	5500	
C 32 2_25.1	25.1	36	300	1.2	2200	5500	19.9	300	0.66	2200	5500	
C 32 2_26.9	26.9	33	300	1.1	2200	5500	18.6	300	0.61	2200	5500	
C 32 2_29.8	29.8	30	300	1.0	2200	5500	16.8	300	0.56	2200	5500	
C 32 2_33.1	33.1	27.2	300	0.90	2200	5500	15.1	300	0.50	2200	5500	153
C 32 2_36.1	36.1	24.9	300	0.82	2200	5500	13.9	300	0.46	2200	5500	
C 32 2_40.7	40.7	22.1	300	0.73	2200	5500	12.3	300	0.41	2200	5500	
C 32 2_45.3	45.3	19.9	300	0.66	2200	5500	11.0	300	0.37	2200	5500	
C 32 2_52.4	52.4	17.2	300	0.57	2200	5500	9.5	300	0.32	2200	5500	
C 32 2_59.4	59.4	15.2	220	0.37	2200	5500	8.4	230	0.21	2200	5500	
C 32 2_66.8	66.8	13.5	220	0.33	2200	5500	7.5	230	0.19	2200	5500	
C 32 3_74.7	74.7	12.0	290	0.38	1300	5500	6.7	300	0.22	1300	5500	
C 32 3_82.6	82.6	10.9	300	0.36	1300	5500	6.1	300	0.20	1300	5500	
C 32 3_94.2	94.2	9.6	300	0.32	1300	5500	5.3	300	0.18	1300	5500	
C 32 3_103.3	103.3	8.7	300	0.29	1300	5500	4.8	300	0.16	1300	5500	
C 32 3_110.6	110.6	8.1	300	0.27	1300	5500	4.5	300	0.15	1300	5500	
C 32 3_122.4	122.4	7.4	300	0.24	1300	5500	4.1	300	0.14	1300	5500	
C 32 3_136.0	136.0	6.6	300	0.22	1300	5500	3.7	300	0.12	1300	5500	
C 32 3_148.4	148.4	6.1	300	0.20	1300	5500	3.4	300	0.11	1300	5500	
C 32 3_167.4	167.4	5.4	300	0.18	1300	5500	3.0	300	0.10	1300	5500	
C 32 3_186.0	186.0	4.8	300	0.16	1300	5500	2.7	300	0.09	1300	5500	
C 32 3_215.6	215.6	4.2	300	0.14	1300	5500	2.3	300	0.08	1300	5500	
C 32 3_244.2	244.2	3.7	260	0.11	1300	5500	2.0	275	0.06	1300	5500	
C 32 3_274.7	274.7	3.3	260	0.09	1300	5500	1.8	275	0.06	1300	5500	

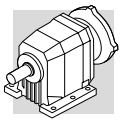

C 36 — 450 Nm

	i	n_1 = 2800 min^{-1}					n_1 = 1400 min^{-1}					
		n_2 min^{-1}	M_{n2} Nm	P_{n1} kW	R_{n1} N	R_{n2} N	n_2 min^{-1}	M_{n2} Nm	P_{n1} kW	R_{n1} N	R_{n2} N	
C 36 2_2.7	2.7	1042	140	16.1	670	1750	521	170	9.8	1150	2240	
C 36 2_3.2	3.2	880	145	14.1	790	1870	440	177	8.6	1240	2380	
C 36 2_3.5	3.5	803	150	13.3	910	1920	402	185	8.2	1320	2440	
C 36 2_4.2	4.2	667	157	11.5	920	2050	333	192	7.1	1410	2620	
C 36 2_4.6	4.6	606	165	11.0	920	2110	303	200	6.7	1470	2700	
C 36 2_5.3	5.3	530	167	9.8	990	2230	265	200	5.8	1650	2870	
C 36 2_5.8	5.8	479	170	9.0	1160	2330	239	200	5.3	1990	3020	
C 36 2_6.8	6.8	413	285	13.0	1750	2130	206	355	8.1	2220	2710	
C 36 2_8.0	8.0	349	297	11.4	1770	2270	174	365	7.0	2250	2910	
C 36 2_8.8	8.8	318	310	10.9	1780	2330	159	380	6.7	2270	3000	
C 36 2_10.6	10.6	264	325	9.5	1790	2500	132	380	5.5	2320	3290	
C 36 2_11.7	11.7	240	340	9.0	1790	2560	120	380	5.0	2370	3460	
C 36 2_13.3	13.3	210	350	8.1	1800	2700	105	380	4.4	2400	3670	
C 36 2_14.8	14.8	190	360	7.5	1800	2810	95	380	4.0	2440	3890	
C 36 2_17.2	17.2	163	370	6.6	1810	3000	81	380	3.4	2460	4200	
C 36 2_19.0	19.0	147	380	6.2	1820	3110	74	380	3.1	2500	4400	
C 36 3_22.1	22.1	127	340	4.7	2300	3570	63	430	3.0	2900	4490	
C 36 3_26.2	26.2	107	355	4.2	2300	3790	53	440	2.6	2910	4810	
C 36 3_28.7	28.7	98	385	4.1	2300	3820	49	450	2.4	2930	4980	
C 36 3_34.6	34.6	81	400	3.6	2300	4100	40	450	2.0	2950	5420	
C 36 3_38.1	38.1	74	435	3.5	2300	4140	37	450	1.8	2970	5690	
C 36 3_43.5	43.5	64	440	3.1	2300	4450	32	450	1.6	2980	6050	
C 36 3_48.2	48.2	58	450	2.9	2310	4580	29.1	450	1.4	2990	6330	
C 36 3_56.2	56.2	50	450	2.5	2320	4970	24.9	450	1.2	2990	6500	
C 36 3_62.0	62.0	45	450	2.2	2330	5170	22.6	450	1.1	3000	6500	157
C 36 3_70.8	70.8	40	450	2.0	2340	5520	19.8	450	0.98	3000	6500	
C 36 3_77.6	77.6	36	450	1.8	2350	5740	18.0	450	0.90	3000	6500	
C 36 3_83.1	83.1	34	450	1.7	2350	5930	16.8	450	0.84	3000	6500	
C 36 3_91.9	91.9	30	450	1.5	2360	6200	15.2	450	0.76	3000	6500	
C 36 3_102.2	102.2	27.4	450	1.4	2360	6400	13.7	450	0.68	3000	6500	
C 36 3_111.5	111.5	25.1	450	1.2	2360	6500	12.6	450	0.62	3000	6500	
C 36 3_125.8	125.8	22.3	450	1.1	2370	6500	11.1	450	0.55	3000	6500	
C 36 3_139.8	139.8	20.0	450	0.99	2370	6500	10.0	450	0.50	3000	6500	
C 36 3_162.0	162.0	17.3	450	0.86	2380	6500	8.6	450	0.43	3000	6500	
C 36 3_183.5	183.5	15.3	450	0.76	2380	6500	7.6	450	0.38	3000	6500	
C 36 3_206.4	206.4	13.6	450	0.67	2380	6500	6.8	450	0.34	3000	6500	
C 36 4_230.9	230.9	12.1	450	0.60	1150	6500	6.1	450	0.30	1300	6500	
C 36 4_255.0	255.0	11.0	450	0.54	1190	6500	5.5	450	0.27	1300	6500	
C 36 4_290.9	290.9	9.6	450	0.48	1210	6500	4.8	450	0.24	1300	6500	
C 36 4_318.9	318.9	8.8	450	0.44	1230	6500	4.4	450	0.22	1300	6500	
C 36 4_341.7	341.7	8.2	450	0.41	1240	6500	4.1	450	0.20	1300	6500	
C 36 4_377.9	377.9	7.4	450	0.37	1260	6500	3.7	450	0.18	1300	6500	
C 36 4_420.2	420.2	6.7	450	0.33	1270	6500	3.3	450	0.17	1300	6500	
C 36 4_458.4	458.4	6.1	450	0.30	1280	6500	3.1	450	0.15	1300	6500	
C 36 4_517.2	517.2	5.4	450	0.27	1300	6500	2.7	450	0.13	1300	6500	
C 36 4_574.7	574.7	4.9	450	0.24	1300	6500	2.4	450	0.12	1300	6500	
C 36 4_665.9	665.9	4.2	450	0.21	1300	6500	2.1	450	0.10	1300	6500	
C 36 4_754.2	754.2	3.7	450	0.18	1300	6500	1.9	450	0.09	1300	6500	
C 36 4_848.5	848.5	3.3	450	0.16	1300	6500	1.6	450	0.08	1300	6500	

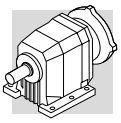

C 36 — 450 Nm

	i	n_1 = 900 min^{-1}					n_1 = 500 min^{-1}					
		n_2 min^{-1}	M_{n2} Nm	P_{n1} kW	R_{n1} N	R_{n2} N	n_2 min^{-1}	M_{n2} Nm	P_{n1} kW	R_{n1} N	R_{n2} N	
C 36 2_2.7	2.7	335	190	7.0	1670	2640	186	200	4.1	3000	3390	
C 36 2_3.2	3.2	283	190	5.9	2080	2790	157	200	3.5	3000	3650	
C 36 2_3.5	3.5	258	200	5.7	2160	2920	143	200	3.2	3000	3810	
C 36 2_4.2	4.2	214	200	4.7	2410	3170	119	200	2.6	3000	4100	
C 36 2_4.6	4.6	195	200	4.3	2590	3320	108	200	2.4	3000	4300	
C 36 2_5.3	5.3	171	200	3.8	2630	3500	95	200	2.1	3000	4520	
C 36 2_5.8	5.8	154	200	3.4	2680	3690	86	200	1.9	3000	4740	
C 36 2_6.8	6.8	133	380	5.6	2660	3290	74	380	3.1	3000	4400	
C 36 2_8.0	8.0	112	380	4.7	2720	3580	62	380	2.6	3000	4750	
C 36 2_8.8	8.8	102	380	4.3	2790	3750	57	380	2.4	3000	4960	
C 36 2_10.6	10.6	85	380	3.6	2850	4110	47	380	2.0	3000	5360	
C 36 2_11.7	11.7	77	380	3.2	2900	4300	43	380	1.8	3000	5630	
C 36 2_13.3	13.3	68	380	2.8	2930	4590	38	380	1.6	3000	5930	
C 36 2_14.8	14.8	61	380	2.6	2970	4800	34	380	1.4	3000	6240	
C 36 2_17.2	17.2	52	380	2.2	2980	5100	29.1	380	1.2	3000	6330	
C 36 2_19.0	19.0	47	380	2.0	3000	5390	26.3	380	1.1	3000	6500	
C 36 3_22.1	22.1	41	450	2.0	3000	5430	22.6	450	1.1	3000	6500	
C 36 3_26.2	26.2	34	450	1.7	3000	5850	19.1	450	0.95	3000	6500	
C 36 3_28.7	28.7	31	450	1.6	3000	6120	17.4	450	0.86	3000	6500	
C 36 3_34.6	34.6	26.0	450	1.3	3000	6500	14.5	450	0.72	3000	6500	
C 36 3_38.1	38.1	23.6	450	1.2	3000	6500	13.1	450	0.65	3000	6500	
C 36 3_43.5	43.5	20.7	450	1.0	3000	6500	11.5	450	0.57	3000	6500	
C 36 3_48.2	48.2	18.7	450	0.93	3000	6500	10.4	450	0.52	3000	6500	
C 36 3_56.2	56.2	16.0	450	0.79	3000	6500	8.9	450	0.44	3000	6500	
C 36 3_62.0	62.0	14.5	450	0.72	3000	6500	8.1	450	0.40	3000	6500	157
C 36 3_70.8	70.8	12.7	450	0.63	3000	6500	7.1	450	0.35	3000	6500	
C 36 3_77.6	77.6	11.6	450	0.58	3000	6500	6.4	450	0.32	3000	6500	
C 36 3_83.1	83.1	10.8	450	0.54	3000	6500	6.0	450	0.30	3000	6500	
C 36 3_91.9	91.9	9.8	450	0.49	3000	6500	5.4	450	0.27	3000	6500	
C 36 3_102.2	102.2	8.8	450	0.44	3000	6500	4.9	450	0.24	3000	6500	
C 36 3_111.5	111.5	8.1	450	0.40	3000	6500	4.5	450	0.22	3000	6500	
C 36 3_125.8	125.8	7.2	450	0.35	3000	6500	4.0	450	0.20	3000	6500	
C 36 3_139.8	139.8	6.4	450	0.32	3000	6500	3.6	450	0.18	3000	6500	
C 36 3_162.0	162.0	5.6	450	0.28	3000	6500	3.1	450	0.15	3000	6500	
C 36 3_183.5	183.5	4.9	450	0.24	3000	6500	2.7	450	0.14	3000	6500	
C 36 3_206.4	206.4	4.4	450	0.22	3000	6500	2.4	450	0.12	3000	6500	
C 36 4_230.9	230.9	3.9	450	0.19	1300	6500	2.2	450	0.11	1300	6500	
C 36 4_255.0	255.0	3.5	450	0.18	1300	6500	2.0	450	0.10	1300	6500	
C 36 4_290.9	290.9	3.1	450	0.15	1300	6500	1.7	450	0.09	1300	6500	
C 36 4_318.9	318.9	2.8	450	0.14	1300	6500	1.6	450	0.08	1300	6500	
C 36 4_341.7	341.7	2.6	450	0.13	1300	6500	1.5	450	0.07	1300	6500	
C 36 4_377.9	377.9	2.4	450	0.12	1300	6500	1.3	450	0.07	1300	6500	
C 36 4_420.2	420.2	2.1	450	0.11	1300	6500	1.2	450	0.06	1300	6500	
C 36 4_458.4	458.4	2.0	450	0.10	1300	6500	1.1	450	0.05	1300	6500	
C 36 4_517.2	517.2	1.7	450	0.09	1300	6500	1.0	450	0.05	1300	6500	
C 36 4_574.7	574.7	1.6	450	0.08	1300	6500	0.9	450	0.04	1300	6500	
C 36 4_665.9	665.9	1.4	450	0.07	1300	6500	0.8	450	0.04	1300	6500	
C 36 4_754.2	754.2	1.2	450	0.06	1300	6500	0.7	450	0.03	1300	6500	
C 36 4_848.5	848.5	1.1	450	0.05	1300	6500	0.6	450	0.03	1300	6500	

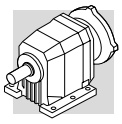

C 41 — 600 Nm

	i	n_1 = 2800 min^{-1}					n_1 = 1400 min^{-1}					
		n_2 min^{-1}	M_{n2} Nm	P_{n1} kW	R_{n1} N	R_{n2} N	n_2 min^{-1}	M_{n2} Nm	P_{n1} kW	R_{n1} N	R_{n2} N	
C 41 2_2.7	2.7	1037	245	28	980	1290	519	245	14.0	1390	2060	
C 41 2_3.6	3.6	778	255	22	1070	1540	389	255	10.9	1650	2390	
C 41 2_4.7	4.7	596	260	17.1	1170	1800	298	260	8.5	2010	2730	
C 41 2_6.0	6.0	467	260	13.4	1290	2100	233	260	6.7	2400	3110	
C 41 2_6.4	6.4	438	275	13.3	2270	2590	219	345	8.3	2860	3260	
C 41 2_7.1	7.1	394	285	12.4	2360	2700	197	355	7.7	2980	3420	
C 41 2_8.6	8.6	326	305	10.9	2300	2860	163	385	6.9	2900	3600	
C 41 2_9.6	9.6	292	310	10.0	2410	3010	146	390	6.3	3030	3800	
C 41 2_11.2	11.2	250	335	9.2	2310	3100	125	420	5.8	2910	3920	
C 41 2_12.4	12.4	226	340	8.5	2440	3270	113	425	5.3	3070	4140	
C 41 2_14.2	14.2	197	355	7.7	2330	3410	99	445	4.8	2980	4300	
C 41 2_15.8	15.8	177	360	7.0	2460	3590	89	450	4.4	3120	4540	
C 41 2_17.8	17.8	157	380	6.6	2330	3680	79	480	4.2	3050	4630	
C 41 2_19.8	19.8	141	385	6.0	2460	3880	71	485	3.8	3180	4890	
C 41 2_22.6	22.6	124	410	5.6	2320	3990	62	500	3.4	3110	5110	
C 41 2_25.0	25.0	112	415	5.1	2460	4210	56	500	3.1	3230	5420	
C 41 2_28.3	28.3	99	445	4.9	2310	4290	49	500	2.7	3180	5710	
C 41 2_31.4	31.4	89	445	4.4	2440	4550	45	500	2.5	3300	6040	
C 41 2_33.4	33.4	84	465	4.3	2390	4560	42	500	2.3	3220	6170	
C 41 2_37.1	37.1	75	470	3.9	2440	4810	38	500	2.1	3320	6520	
C 41 2_44.8	44.8	63	500	3.4	2660	5130	31	500	1.7	3500	7000	
C 41 3_28.5	28.5	98	445	4.9	3060	4300	49	560	3.1	3500	5420	
C 41 3_31.2	31.2	90	450	4.5	3090	4510	45	570	2.9	3500	5670	
C 41 3_36.8	36.8	76	480	4.1	3070	4710	38	600	2.6	3500	5960	
C 41 3_40.3	40.3	69	485	3.8	3100	4940	35	600	2.3	3500	6280	
C 41 3_47.0	47.0	60	515	3.5	3070	5140	29.8	600	2.0	3500	6720	
C 41 3_51.5	51.5	54	525	3.2	3090	5360	27.2	600	1.8	3500	7000	
C 41 3_58.7	58.7	48	550	3.0	3070	5550	23.9	600	1.6	3500	7000	161
C 41 3_64.3	64.3	44	560	2.7	3090	5800	21.8	600	1.5	3500	7000	
C 41 3_74.4	74.4	38	590	2.5	3060	6040	18.8	600	1.3	3500	7000	
C 41 3_81.5	81.5	34	600	2.3	3090	6310	17.2	600	1.2	3500	7000	
C 41 3_93.3	93.3	30	600	2.0	3080	6700	15.0	600	1.0	3500	7000	
C 41 3_102.3	102.3	27.4	600	1.8	3110	7000	13.7	600	0.92	3500	7000	
C 41 3_110.1	110.1	25.4	600	1.7	3090	7000	12.7	600	0.86	3500	7000	
C 41 3_120.6	120.6	23.2	600	1.6	3110	7000	11.6	600	0.78	3500	7000	
C 41 3_132.9	132.9	21.1	600	1.4	3090	7000	10.5	600	0.71	3500	7000	
C 41 3_145.6	145.6	19.2	600	1.3	3120	7000	9.6	600	0.65	3500	7000	
C 41 3_164.1	164.1	17.1	600	1.2	3100	7000	8.5	600	0.58	3500	7000	
C 41 3_179.9	179.9	15.6	600	1.1	3120	7000	7.8	600	0.53	3500	7000	
C 41 3_190.8	190.8	14.7	600	0.99	3110	7000	7.3	600	0.50	3500	7000	
C 41 3_209.1	209.1	13.4	600	0.90	3130	7000	6.7	600	0.45	3500	7000	
C 41 4_239.9	239.9	11.7	600	0.81	1480	7000	5.8	600	0.40	1910	7000	
C 41 4_263.0	263.0	10.6	600	0.74	1500	7000	5.3	600	0.37	1920	7000	
C 41 4_304.2	304.2	9.2	600	0.64	1520	7000	4.6	600	0.32	1950	7000	
C 41 4_333.4	333.4	8.4	600	0.58	1530	7000	4.2	600	0.29	1960	7000	
C 41 4_381.8	381.8	7.3	600	0.51	1540	7000	3.7	600	0.25	1970	7000	
C 41 4_418.5	418.5	6.7	600	0.46	1550	7000	3.3	600	0.23	1980	7000	
C 41 4_450.2	450.2	6.2	600	0.43	1560	7000	3.1	600	0.21	1990	7000	
C 41 4_493.5	493.5	5.7	600	0.39	1570	7000	2.8	600	0.20	2000	7000	
C 41 4_543.5	543.5	5.2	600	0.36	1570	7000	2.6	600	0.18	2000	7000	
C 41 4_595.8	595.8	4.7	600	0.32	1580	7000	2.3	600	0.16	2010	7000	
C 41 4_671.3	671.3	4.2	600	0.29	1590	7000	2.1	600	0.14	2020	7000	
C 41 4_735.9	735.9	3.8	600	0.26	1590	7000	1.9	600	0.13	2020	7000	
C 41 4_780.4	780.4	3.6	600	0.25	1600	7000	1.8	600	0.12	2030	7000	
C 41 4_855.5	855.5	3.3	600	0.23	1600	7000	1.6	600	0.11	2030	7000	

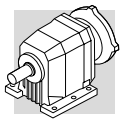

C 41 — 600 Nm

	i	n_1 = 900 min^{-1}					n_1 = 500 min^{-1}					
		n_2 min^{-1}	M_{n2} Nm	P_{n1} kW	R_{n1} N	R_{n2} N	n_2 min^{-1}	M_{n2} Nm	P_{n1} kW	R_{n1} N	R_{n2} N	
C 41 2_2.7	2.7	333	245	9.0	2560	2650	185	245	5.0	3500	3590	
C 41 2_3.6	3.6	250	255	7.0	2710	3050	139	255	3.9	3500	4090	
C 41 2_4.7	4.7	191	260	5.5	2900	3440	106	260	3.0	3500	4570	
C 41 2_6.0	6.0	150	260	4.3	3080	3890	83	260	2.4	3500	5110	
C 41 2_6.4	6.4	141	400	6.2	3310	3780	78	490	4.2	3500	4580	
C 41 2_7.1	7.1	127	415	5.8	3460	3940	70	500	3.9	3500	4820	
C 41 2_8.6	8.6	105	445	5.1	3360	4180	58	500	3.2	3500	5290	
C 41 2_9.6	9.6	94	450	4.7	3500	4410	52	500	2.9	3500	5600	
C 41 2_11.2	11.2	80	490	4.3	3500	4520	45	500	2.5	3500	5980	
C 41 2_12.4	12.4	73	495	4.0	3500	4780	40	500	2.2	3500	6320	
C 41 2_14.2	14.2	63	500	3.5	3500	5060	35	500	1.9	3500	6700	
C 41 2_15.8	15.8	57	500	3.1	3500	5370	32	500	1.7	3500	7000	
C 41 2_17.8	17.8	51	500	2.8	3500	5650	28.1	500	1.5	3500	7000	
C 41 2_19.8	19.8	45	500	2.5	3500	5970	25.3	500	1.4	3500	7000	
C 41 2_22.6	22.6	40	500	2.2	3500	6320	22.1	500	1.2	3500	7000	
C 41 2_25.0	25.0	36	500	2.0	3500	6670	20.0	500	1.1	3500	7000	
C 41 2_28.3	28.3	32	500	1.8	3500	7000	17.7	500	0.97	3500	7000	
C 41 2_31.4	31.4	28.7	500	1.6	3500	7000	15.9	500	0.88	3500	7000	
C 41 2_33.4	33.4	26.9	500	1.5	3500	7000	15.0	500	0.83	3500	7000	
C 41 2_37.1	37.1	24.3	500	1.3	3500	7000	13.5	500	0.74	3500	7000	
C 41 2_44.8	44.8	20.1	500	1.1	3500	7000	11.2	500	0.62	3500	7000	
C 41 3_28.5	28.5	32	600	2.1	3500	6530	17.5	600	1.2	3500	7000	
C 41 3_31.2	31.2	28.8	600	1.9	3500	6870	16.0	600	1.1	3500	7000	
C 41 3_36.8	36.8	24.5	600	1.7	3500	7000	13.6	600	0.92	3500	7000	
C 41 3_40.3	40.3	22.3	600	1.5	3500	7000	12.4	600	0.84	3500	7000	
C 41 3_47.0	47.0	19.1	600	1.3	3500	7000	10.6	600	0.72	3500	7000	
C 41 3_51.5	51.5	17.5	600	1.2	3500	7000	9.7	600	0.66	3500	7000	
C 41 3_58.7	58.7	15.3	600	1.0	3500	7000	8.5	600	0.58	3500	7000	161
C 41 3_64.3	64.3	14.0	600	0.95	3500	7000	7.8	600	0.53	3500	7000	
C 41 3_74.4	74.4	12.1	600	0.82	3500	7000	6.7	600	0.45	3500	7000	
C 41 3_81.5	81.5	11.0	600	0.75	3500	7000	6.1	600	0.41	3500	7000	
C 41 3_93.3	93.3	9.6	600	0.65	3500	7000	5.4	600	0.36	3500	7000	
C 41 3_102.3	102.3	8.8	600	0.59	3500	7000	4.9	600	0.33	3500	7000	
C 41 3_110.1	110.1	8.2	600	0.55	3500	7000	4.5	600	0.31	3500	7000	
C 41 3_120.6	120.6	7.5	600	0.50	3500	7000	4.1	600	0.28	3500	7000	
C 41 3_132.9	132.9	6.8	600	0.46	3500	7000	3.8	600	0.25	3500	7000	
C 41 3_145.6	145.6	6.2	600	0.42	3500	7000	3.4	600	0.23	3500	7000	
C 41 3_164.1	164.1	5.5	600	0.37	3500	7000	3.0	600	0.21	3500	7000	
C 41 3_179.9	179.9	5.0	600	0.34	3500	7000	2.8	600	0.19	3500	7000	
C 41 3_190.8	190.8	4.7	600	0.32	3500	7000	2.6	600	0.18	3500	7000	
C 41 3_209.1	209.1	4.3	600	0.29	3500	7000	2.4	600	0.16	3500	7000	
C 41 4_239.9	239.9	3.8	600	0.26	2200	7000	2.1	600	0.14	2200	7000	
C 41 4_263.0	263.0	3.4	600	0.24	2200	7000	1.9	600	0.13	2200	7000	
C 41 4_304.2	304.2	3.0	600	0.20	2200	7000	1.6	600	0.11	2200	7000	
C 41 4_333.4	333.4	2.7	600	0.19	2200	7000	1.5	600	0.10	2200	7000	
C 41 4_381.8	381.8	2.4	600	0.16	2200	7000	1.3	600	0.09	2200	7000	
C 41 4_418.5	418.5	2.2	600	0.15	2200	7000	1.2	600	0.08	2200	7000	
C 41 4_450.2	450.2	2.0	600	0.14	2200	7000	1.1	600	0.08	2200	7000	
C 41 4_493.5	493.5	1.8	600	0.13	2200	7000	1.0	600	0.07	2200	7000	
C 41 4_543.5	543.5	1.7	600	0.11	2200	7000	0.92	600	0.06	2200	7000	
C 41 4_595.8	595.8	1.5	600	0.10	2200	7000	0.84	600	0.06	2200	7000	
C 41 4_671.3	671.3	1.3	600	0.09	2200	7000	0.74	600	0.05	2200	7000	
C 41 4_735.9	735.9	1.2	600	0.08	2200	7000	0.68	600	0.05	2200	7000	
C 41 4_780.4	780.4	1.2	600	0.08	2200	7000	0.64	600	0.04	2200	7000	
C 41 4_855.5	855.5	1.1	600	0.07	2200	7000	0.58	600	0.04	2200	7000	

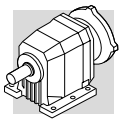

C 51 — 1000 Nm

	i	n_1 = 2800 min^{-1}					n_1 = 1400 min^{-1}					
		n_2	M_{n2}	P_{n1}	R_{n1}	R_{n2}	n_2	M_{n2}	P_{n1}	R_{n1}	R_{n2}	
		min^{-1}	Nm	kW	N	N	min^{-1}	Nm	kW	N	N	
C 51 2_2.6	2.6	1077	315	37	980	3340	538	400	24	1390	4200	
C 51 2_3.3	3.3	848	340	32	1070	3610	424	420	19.6	1650	4580	
C 51 2_4.5	4.5	622	370	25	1170	4010	311	435	14.9	2010	5180	
C 51 2_5.6	5.6	500	390	21	1290	4380	250	435	12.0	2400	5760	
C 51 2_7.0	7.0	400	500	22	2270	4760	200	630	13.9	2860	6000	
C 51 2_7.8	7.8	359	510	20	2360	4940	179	640	12.7	2980	6230	
C 51 2_8.8	8.8	318	545	19.1	2300	5120	159	685	12.0	2900	6450	
C 51 2_9.8	9.8	286	545	17.2	2410	5350	143	685	10.8	3030	6750	
C 51 2_11.8	11.8	237	610	16.0	2310	5620	119	770	10.1	2910	7080	
C 51 2_13.1	13.1	214	595	14.0	2440	5930	107	750	8.8	3070	7470	
C 51 2_15.0	15.0	187	660	13.6	2330	6080	93	800	8.2	2980	7770	
C 51 2_16.6	16.6	169	640	11.9	2460	6420	84	795	7.4	3120	8130	
C 51 2_18.9	18.9	148	695	11.3	2330	6630	74	800	6.5	3050	8620	
C 51 2_21.0	21.0	133	675	9.9	2460	7000	67	795	5.8	3180	9020	
C 51 2_23.4	23.4	120	735	9.7	2320	7160	60	800	5.3	3110	9460	
C 51 2_25.9	25.9	108	715	8.5	2460	7550	54	795	4.7	3230	9890	
C 51 2_29.8	29.8	94	795	8.2	2310	7770	47	800	4.1	3180	10000	
C 51 2_33.0	33.0	85	775	7.2	2440	8190	42	795	3.7	3300	10000	
C 51 2_36.4	36.4	77	750	6.4	2390	8660	38	790	3.3	3220	10000	
C 51 2_40.4	40.4	69	795	6.1	2440	8870	35	795	3.0	3320	10000	
C 51 2_43.1	43.1	65	730	5.2	2450	9380	32	770	2.8	3280	10000	
C 51 2_47.8	47.8	59	800	5.2	2460	9530	29.3	800	2.6	3350	10000	
C 51 2_51.4	51.4	54	665	4.0	2550	10000	27.2	700	2.1	3390	10000	
C 51 2_57.0	57.0	49	745	4.0	2540	10000	24.6	785	2.1	3380	10000	
C 51 3_21.8	21.8	128	720	10.4	2870	6940	64	905	6.5	3500	8750	
C 51 3_23.9	23.9	117	730	9.6	2910	7230	59	920	6.1	3500	9110	
C 51 3_27.4	27.4	102	770	8.9	2890	7510	51	970	5.6	3500	9470	
C 51 3_30.1	30.1	93	780	8.2	2930	7830	47	1000	5.2	3500	9810	
C 51 3_37.0	37.0	76	840	7.2	2910	8330	38	1000	4.3	3500	10000	
C 51 3_40.5	40.5	69	855	6.7	2940	8670	35	1000	3.9	3500	10000	165
C 51 3_46.7	46.7	60	905	6.1	2920	9020	30	1000	3.4	3500	10000	
C 51 3_51.2	51.2	55	920	5.7	2950	9390	27.3	1000	3.1	3500	10000	
C 51 3_59.0	59.0	47	970	5.2	2910	9780	23.7	1000	2.7	3500	10000	
C 51 3_64.6	64.6	43	1000	4.9	2940	10000	21.7	1000	2.4	3500	10000	
C 51 3_72.9	72.9	38	1000	4.3	2920	10000	19.2	1000	2.2	3500	10000	
C 51 3_79.9	79.9	35	1000	3.9	2960	10000	17.5	1000	2.0	3500	10000	
C 51 3_93.0	93.0	30	1000	3.4	2950	10000	15.1	1000	1.7	3500	10000	
C 51 3_101.8	101.8	27.5	1000	3.1	2990	10000	13.8	1000	1.5	3500	10000	
C 51 3_113.6	113.6	24.6	1000	2.8	2960	10000	12.3	1000	1.4	3500	10000	
C 51 3_124.4	124.4	22.5	1000	2.5	3000	10000	11.3	1000	1.3	3500	10000	
C 51 3_134.6	134.6	20.8	1000	2.3	2970	10000	10.4	1000	1.2	3500	10000	
C 51 3_147.4	147.4	19.0	1000	2.1	3010	10000	9.5	1000	1.1	3500	10000	
C 51 3_160.5	160.5	17.4	1000	2.0	2980	10000	8.7	1000	0.98	3500	10000	
C 51 3_175.8	175.8	15.9	1000	1.8	3020	10000	8.0	1000	0.90	3500	10000	
C 51 3_197.9	197.9	14.1	1000	1.6	2980	10000	7.1	1000	0.80	3500	10000	
C 51 3_216.7	216.7	12.9	1000	1.5	3020	10000	6.5	1000	0.73	3500	10000	
C 51 4_240.9	240.9	11.6	1000	1.3	2100	10000	5.8	1000	0.67	2200	10000	
C 51 4_263.8	263.8	10.6	1000	1.2	2120	10000	5.3	1000	0.61	2200	10000	
C 51 4_297.8	297.8	9.4	1000	1.1	2140	10000	4.7	1000	0.54	2200	10000	
C 51 4_326.1	326.1	8.6	1000	0.99	2160	10000	4.3	1000	0.49	2200	10000	
C 51 4_379.6	379.6	7.4	1000	0.85	2190	10000	3.7	1000	0.42	2200	10000	
C 51 4_415.7	415.7	6.7	1000	0.78	2200	10000	3.4	1000	0.39	2200	10000	
C 51 4_463.9	463.9	6.0	1000	0.69	2200	10000	3.0	1000	0.35	2200	10000	
C 51 4_508.0	508.0	5.5	1000	0.63	2200	10000	2.8	1000	0.32	2200	10000	
C 51 4_549.7	549.7	5.1	1000	0.59	2200	10000	2.5	1000	0.29	2200	10000	
C 51 4_602.0	602.0	4.7	1000	0.54	2200	10000	2.3	1000	0.27	2200	10000	
C 51 4_655.4	655.4	4.3	1000	0.49	2200	10000	2.1	1000	0.25	2200	10000	
C 51 4_717.7	717.7	3.9	1000	0.45	2200	10000	2.0	1000	0.22	2200	10000	
C 51 4_808.0	808.0	3.5	1000	0.40	2200	10000	1.7	1000	0.20	2200	10000	
C 51 4_884.9	884.9	3.2	1000	0.36	2200	10000	1.6	1000	0.18	2200	10000	

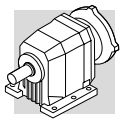

C 51 — 1000 Nm

	i	n_1 = 900 min^{-1}					n_1 = 500 min^{-1}					
		n_2	M_{n2}	P_{n1}	R_{n1}	R_{n2}	n_2	M_{n2}	P_{n1}	R_{n1}	R_{n2}	
		min^{-1}	Nm	kW	N	N	min^{-1}	Nm	kW	N	N	
C 51 2_2.6	2.6	346	400	15.3	2560	5130	192	400	8.5	3500	6620	
C 51 2_3.3	3.3	273	420	12.6	2710	5590	152	420	7.0	3500	7200	
C 51 2_4.5	4.5	200	435	9.6	2900	6300	111	435	5.3	3500	8070	
C 51 2_5.6	5.6	161	435	7.7	3080	6970	89	435	4.3	3500	8880	
C 51 2_7.0	7.0	129	730	10.3	3310	6950	71	800	6.3	3500	8760	
C 51 2_7.8	7.8	115	740	9.4	3460	7220	64	800	5.7	3500	9140	
C 51 2_8.8	8.8	102	795	9.0	3360	7470	57	800	5.0	3500	9680	
C 51 2_9.8	9.8	92	800	8.1	3500	7790	51	800	4.5	3500	10000	
C 51 2_11.8	11.8	76	800	6.7	3500	8530	42	800	3.7	3500	10000	
C 51 2_13.1	13.1	69	800	6.1	3500	8900	38	800	3.4	3500	10000	
C 51 2_15.0	15.0	60	800	5.3	3500	9450	33	800	2.9	3500	10000	
C 51 2_16.6	16.6	54	800	4.8	3500	9850	30	800	2.7	3500	10000	
C 51 2_18.9	18.9	48	800	4.2	3500	10000	26.5	800	2.3	3500	10000	
C 51 2_21.0	21.0	43	800	3.8	3500	10000	23.8	800	2.1	3500	10000	
C 51 2_23.4	23.4	38	800	3.4	3500	10000	21.4	800	1.9	3500	10000	
C 51 2_25.9	25.9	35	800	3.1	3500	10000	19.3	800	1.7	3500	10000	
C 51 2_29.8	29.8	30	800	2.7	3500	10000	16.8	800	1.5	3500	10000	
C 51 2_33.0	33.0	27.3	800	2.4	3500	10000	15.2	800	1.3	3500	10000	
C 51 2_36.4	36.4	24.7	800	2.2	3500	10000	13.7	800	1.2	3500	10000	
C 51 2_40.4	40.4	22.3	800	2.0	3500	10000	12.4	800	1.1	3500	10000	
C 51 2_43.1	43.1	20.9	800	1.8	3500	10000	11.6	800	1.0	3500	10000	
C 51 2_47.8	47.8	18.8	800	1.7	3500	10000	10.5	800	0.92	3500	10000	
C 51 2_51.4	51.4	17.5	725	1.4	3500	10000	9.7	755	0.81	3500	10000	
C 51 2_57.0	57.0	15.8	795	1.4	3500	10000	8.8	795	0.77	3500	10000	
C 51 3_21.8	21.8	41	1000	4.6	3500	10000	22.9	1000	2.6	3500	10000	
C 51 3_23.9	23.9	38	1000	4.2	3500	10000	20.9	1000	2.4	3500	10000	
C 51 3_27.4	27.4	33	1000	3.7	3500	10000	18.2	1000	2.1	3500	10000	
C 51 3_30.1	30.1	29.9	1000	3.4	3500	10000	16.6	1000	1.9	3500	10000	
C 51 3_37.0	37.0	24.3	1000	2.7	3500	10000	13.5	1000	1.5	3500	10000	
C 51 3_40.5	40.5	22.2	1000	2.5	3500	10000	12.3	1000	1.4	3500	10000	165
C 51 3_46.7	46.7	19.3	1000	2.2	3500	10000	10.7	1000	1.2	3500	10000	
C 51 3_51.2	51.2	17.6	1000	2.0	3500	10000	9.8	1000	1.1	3500	10000	
C 51 3_59.0	59.0	15.3	1000	1.7	3500	10000	8.5	1000	0.95	3500	10000	
C 51 3_64.6	64.6	13.9	1000	1.6	3500	10000	7.7	1000	0.87	3500	10000	
C 51 3_72.9	72.9	12.3	1000	1.4	3500	10000	6.9	1000	0.77	3500	10000	
C 51 3_79.9	79.9	11.3	1000	1.3	3500	10000	6.3	1000	0.70	3500	10000	
C 51 3_93.0	93.0	9.7	1000	1.1	3500	10000	5.4	1000	0.61	3500	10000	
C 51 3_101.8	101.8	8.8	1000	1.0	3500	10000	4.9	1000	0.55	3500	10000	
C 51 3_113.6	113.6	7.9	1000	0.89	3500	10000	4.4	1000	0.50	3500	10000	
C 51 3_124.4	124.4	7.2	1000	0.81	3500	10000	4.0	1000	0.45	3500	10000	
C 51 3_134.6	134.6	6.7	1000	0.75	3500	10000	3.7	1000	0.42	3500	10000	
C 51 3_147.4	147.4	6.1	1000	0.69	3500	10000	3.4	1000	0.38	3500	10000	
C 51 3_160.5	160.5	5.6	1000	0.63	3500	10000	3.1	1000	0.35	3500	10000	
C 51 3_175.8	175.8	5.1	1000	0.58	3500	10000	2.8	1000	0.32	3500	10000	
C 51 3_197.9	197.9	4.5	1000	0.51	3500	10000	2.5	1000	0.28	3500	10000	
C 51 3_216.7	216.7	4.2	1000	0.47	3500	10000	2.3	1000	0.26	3500	10000	
C 51 4_240.9	240.9	3.7	1000	0.43	2200	10000	2.1	1000	0.24	2200	10000	
C 51 4_263.8	263.8	3.4	1000	0.39	2200	10000	1.9	1000	0.22	2200	10000	
C 51 4_297.8	297.8	3.0	1000	0.35	2200	10000	1.7	1000	0.19	2200	10000	
C 51 4_326.1	326.1	2.8	1000	0.32	2200	10000	1.5	1000	0.18	2200	10000	
C 51 4_379.6	379.6	2.4	1000	0.27	2200	10000	1.3	1000	0.15	2200	10000	
C 51 4_415.7	415.7	2.2	1000	0.25	2200	10000	1.2	1000	0.14	2200	10000	
C 51 4_463.9	463.9	1.9	1000	0.22	2200	10000	1.1	1000	0.12	2200	10000	
C 51 4_508.0	508.0	1.8	1000	0.20	2200	10000	1.0	1000	0.11	2200	10000	
C 51 4_549.7	549.7	1.6	1000	0.19	2200	10000	0.91	1000	0.10	2200	10000	
C 51 4_602.0	602.0	1.5	1000	0.17	2200	10000	0.83	1000	0.10	2200	10000	
C 51 4_655.4	655.4	1.4	1000	0.16	2200	10000	0.76	1000	0.09	2200	10000	
C 51 4_717.7	717.7	1.3	1000	0.14	2200	10000	0.70	1000	0.08	2200	10000	
C 51 4_808.0	808.0	1.1	1000	0.13	2200	10000	0.62	1000	0.07	2200	10000	
C 51 4_884.9	884.9	1.0	1000	0.12	2200	10000	0.57	1000	0.07	2200	10000	

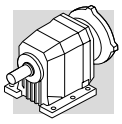

C 61 — 1600 Nm

	i	n_1 = 2800 min^{-1}					n_1 = 1400 min^{-1}					
		n_2 min^{-1}	M_{n2} Nm	P_{n1} kW	R_{n1} N	R_{n2} N	n_2 min^{-1}	M_{n2} Nm	P_{n1} kW	R_{n1} N	R_{n2} N	
C 61 2_2.8	2.8	1000	445	49	—	4670	500	550	30	770	5930	169
C 61 2_3.7	3.7	757	530	44	—	4950	378	575	24	1730	6600	
C 61 2_4.6	4.6	609	575	39	—	5280	304	600	20	2150	7130	
C 61 2_6.0	6.0	467	575	30	—	6000	233	625	16.1	2700	7950	
C 61 2_6.7	6.7	418	900	41	2230	5600	209	1130	26	2850	7060	
C 61 2_7.5	7.5	373	1000	41	2220	5620	187	1250	26	2900	7110	
C 61 2_8.8	8.8	318	1000	35	2290	6080	159	1250	22	2980	7690	
C 61 2_9.8	9.8	286	1100	35	2380	6140	143	1350	21	3330	7850	
C 61 2_10.9	10.9	257	1050	30	2530	6590	128	1350	19.1	2940	8210	
C 61 2_12.1	12.1	231	1150	29	2670	6670	116	1350	17.2	3600	8730	
C 61 2_14.3	14.3	196	1150	25	2450	7220	98	1350	14.6	3590	9430	
C 61 2_15.9	15.9	176	1250	24	2660	7350	88	1350	13.1	3780	9990	
C 61 2_17.7	17.7	158	1200	21	2540	7850	79	1350	11.8	3700	10400	
C 61 2_19.6	19.6	143	1300	20	2780	8000	71	1350	10.6	3890	11000	
C 61 2_22.4	22.4	125	1250	17.2	2630	8650	63	1350	9.3	3810	11600	
C 61 2_24.8	24.8	113	1350	16.8	2840	8840	56	1350	8.4	3980	12300	
C 61 2_27.4	27.4	102	1300	14.6	2600	9390	51	1350	7.6	3880	12800	
C 61 2_30.4	30.4	92	1350	13.7	2900	9770	46	1350	6.9	4050	13500	
C 61 2_34.2	34.2	82	1165	10.5	3020	10900	41	1225	5.5	4090	14500	
C 61 2_38.0	38.0	74	1280	10.4	3030	11100	37	1350	5.5	4100	14800	
C 61 3_26.8	26.8	104	1140	13.4	3740	9810	52	1435	8.4	4700	12400	
C 61 3_29.4	29.4	95	1160	12.4	3780	10200	48	1465	7.9	4700	12900	
C 61 3_33.0	33.0	85	1210	11.6	3750	10600	42	1525	7.3	4700	13300	
C 61 3_36.1	36.1	78	1235	10.8	3800	11000	39	1555	6.8	4700	13800	
C 61 3_43.4	43.4	65	1315	9.6	3760	11600	32	1600	5.8	4700	14800	
C 61 3_47.6	47.6	59	1340	8.9	3810	12100	29.4	1600	5.3	4700	15500	
C 61 3_53.5	53.5	52	1400	8.2	3760	12500	26.2	1600	4.7	4700	16000	
C 61 3_58.6	58.6	48	1430	7.7	3810	13000	23.9	1600	4.3	4700	16000	
C 61 3_67.7	67.7	41	1505	7.0	3750	13500	20.7	1600	3.7	4700	16000	
C 61 3_74.2	74.2	38	1535	6.5	3800	14100	18.9	1600	3.4	4700	16000	
C 61 3_83.0	83.0	34	1600	6.1	3740	14500	16.9	1600	3.0	4700	16000	
C 61 3_91.0	91.0	31	1600	5.5	3800	15200	15.4	1600	2.8	4700	16000	
C 61 3_103.6	103.6	27.0	1600	4.9	3760	16000	13.5	1600	2.4	4700	16000	
C 61 3_113.6	113.6	24.6	1600	4.4	3820	16000	12.3	1600	2.2	4700	16000	
C 61 3_128.1	128.1	21.9	1600	3.9	3790	16000	10.9	1600	2.0	4700	16000	
C 61 3_140.5	140.5	19.9	1600	3.6	3840	16000	10.0	1600	1.8	4700	16000	
C 61 3_150.0	150.0	18.7	1600	3.4	3800	16000	9.3	1600	1.7	4700	16000	
C 61 3_164.5	164.5	17.0	1600	3.1	3850	16000	8.5	1600	1.5	4700	16000	
C 61 3_178.6	178.6	15.7	1600	2.8	3800	16000	7.8	1600	1.4	4700	16000	
C 61 3_195.8	195.8	14.3	1600	2.6	3860	16000	7.2	1600	1.3	4700	16000	
C 61 4_217.4	217.4	12.9	1600	2.4	3020	16000	6.4	1600	1.2	3500	16000	
C 61 4_238.3	238.3	11.7	1600	2.2	3060	16000	5.9	1600	1.1	3500	16000	
C 61 4_275.3	275.3	10.2	1600	1.9	3100	16000	5.1	1600	0.94	3500	16000	
C 61 4_301.7	301.7	9.3	1600	1.7	3130	16000	4.6	1600	0.85	3500	16000	
C 61 4_337.7	337.7	8.3	1600	1.5	3160	16000	4.1	1600	0.76	3500	16000	
C 61 4_370.1	370.1	7.6	1600	1.4	3180	16000	3.8	1600	0.70	3500	16000	
C 61 4_421.5	421.5	6.6	1600	1.2	3200	16000	3.3	1600	0.61	3500	16000	
C 61 4_462.0	462.0	6.1	1600	1.1	3220	16000	3.0	1600	0.56	3500	16000	
C 61 4_521.1	521.1	5.4	1600	0.99	3240	16000	2.7	1600	0.49	3500	16000	
C 61 4_571.2	571.2	4.9	1600	0.90	3250	16000	2.5	1600	0.45	3500	16000	
C 61 4_610.1	610.1	4.6	1600	0.84	3260	16000	2.3	1600	0.42	3500	16000	
C 61 4_668.8	668.8	4.2	1600	0.77	3280	16000	2.1	1600	0.39	3500	16000	
C 61 4_726.3	726.3	3.9	1600	0.71	3290	16000	1.9	1600	0.35	3500	16000	
C 61 4_796.1	796.1	3.5	1600	0.65	3300	16000	1.8	1600	0.32	3500	16000	

(—) Contact our technical service department advising radial load data (rotation direction, orientation, position)

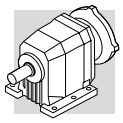

C 61 — 1600 Nm

	i	n_1 = 900 min^{-1}					n_1 = 500 min^{-1}					
		n_2 min^{-1}	M_{n2} Nm	P_{n1} kW	R_{n1} N	R_{n2} N	n_2 min^{-1}	M_{n2} Nm	P_{n1} kW	R_{n1} N	R_{n2} N	
C 61 2_2.8	2.8	321	565	20	2840	7150	179	665	13.1	4050	8790	
C 61 2_3.7	3.7	243	625	16.8	3000	7800	135	665	9.9	4700	9860	
C 61 2_4.6	4.6	196	665	14.3	3170	8380	109	665	8.0	4700	10760	
C 61 2_6.0	6.0	150	665	11.0	4120	9440	83	665	6.1	4700	12000	
C 61 2_6.7	6.7	134	1350	20	2850	8050	75	1350	11.1	4700	10800	
C 61 2_7.5	7.5	120	1350	17.9	4010	8560	67	1350	9.9	4700	11400	
C 61 2_8.8	8.8	102	1350	15.2	4070	9240	57	1350	8.5	4700	12200	
C 61 2_9.8	9.8	92	1350	13.7	4310	9790	51	1350	7.6	4700	12900	
C 61 2_10.9	10.9	83	1350	12.3	4270	10200	46	1350	6.8	4700	13400	
C 61 2_12.1	12.1	74	1350	11.1	4480	10800	41	1350	6.1	4700	14100	
C 61 2_14.3	14.3	63	1350	9.4	4470	11600	35	1350	5.2	4700	15100	
C 61 2_15.9	15.9	57	1350	8.4	4660	12300	31	1350	4.7	4700	15900	
C 61 2_17.7	17.7	51	1350	7.6	4580	12800	28.2	1350	4.2	4700	16000	
C 61 2_19.6	19.6	46	1350	6.8	4700	13500	25.5	1350	3.8	4700	16000	
C 61 2_22.4	22.4	40	1350	6.0	4690	14200	22.3	1350	3.3	4700	16000	
C 61 2_24.8	24.8	36	1350	5.4	4700	14900	20.2	1350	3.0	4700	16000	
C 61 2_27.4	27.4	33	1350	4.9	4700	15500	18.2	1350	2.7	4700	16000	
C 61 2_30.4	30.4	29.6	1350	4.4	4700	16000	16.4	1350	2.4	4700	16000	
C 61 2_34.2	34.2	26.3	1265	3.7	4700	16000	14.6	1325	2.1	4700	16000	
C 61 2_38.0	38.0	23.7	1350	3.5	4700	16000	13.2	1350	2.0	4700	16000	
C 61 3_26.8	26.8	34	1600	6.0	4700	14500	18.7	1600	3.4	4700	16000	
C 61 3_29.4	29.4	31	1600	5.5	4700	15200	17.0	1600	3.1	4700	16000	
C 61 3_33.0	33.0	27.3	1600	4.9	4700	15900	15.2	1600	2.7	4700	16000	
C 61 3_36.1	36.1	24.9	1600	4.5	4700	16000	13.9	1600	2.5	4700	16000	
C 61 3_43.4	43.4	20.7	1600	3.7	4700	16000	11.5	1600	2.1	4700	16000	
C 61 3_47.6	47.6	18.9	1600	3.4	4700	16000	10.5	1600	1.9	4700	16000	
C 61 3_53.5	53.5	16.8	1600	3.0	4700	16000	9.3	1600	1.7	4700	16000	169
C 61 3_58.6	58.6	15.4	1600	2.8	4700	16000	8.5	1600	1.5	4700	16000	
C 61 3_67.7	67.7	13.3	1600	2.4	4700	16000	7.4	1600	1.3	4700	16000	
C 61 3_74.2	74.2	12.1	1600	2.2	4700	16000	6.7	1600	1.2	4700	16000	
C 61 3_83.0	83.0	10.8	1600	2.0	4700	16000	6.0	1600	1.1	4700	16000	
C 61 3_91.0	91.0	9.9	1600	1.8	4700	16000	5.5	1600	0.99	4700	16000	
C 61 3_103.6	103.6	8.7	1600	1.6	4700	16000	4.8	1600	0.87	4700	16000	
C 61 3_113.6	113.6	7.9	1600	1.4	4700	16000	4.4	1600	0.79	4700	16000	
C 61 3_128.1	128.1	7.0	1600	1.3	4700	16000	3.9	1600	0.70	4700	16000	
C 61 3_140.5	140.5	6.4	1600	1.2	4700	16000	3.6	1600	0.64	4700	16000	
C 61 3_150.0	150.0	6.0	1600	1.1	4700	16000	3.3	1600	0.60	4700	16000	
C 61 3_164.5	164.5	5.5	1600	0.99	4700	16000	3.0	1600	0.55	4700	16000	
C 61 3_178.6	178.6	5.0	1600	0.91	4700	16000	2.8	1600	0.50	4700	16000	
C 61 3_195.8	195.8	4.6	1600	0.83	4700	16000	2.6	1600	0.46	4700	16000	
C 61 4_217.4	217.4	4.1	1600	0.76	3500	16000	2.3	1600	0.42	3500	16000	
C 61 4_238.3	238.3	3.8	1600	0.70	3500	16000	2.1	1600	0.39	3500	16000	
C 61 4_275.3	275.3	3.3	1600	0.60	3500	16000	1.8	1600	0.33	3500	16000	
C 61 4_301.7	301.7	3.0	1600	0.55	3500	16000	1.7	1600	0.31	3500	16000	
C 61 4_337.7	337.7	2.7	1600	0.49	3500	16000	1.5	1600	0.27	3500	16000	
C 61 4_370.1	370.1	2.4	1600	0.45	3500	16000	1.4	1600	0.25	3500	16000	
C 61 4_421.5	421.5	2.1	1600	0.39	3500	16000	1.2	1600	0.22	3500	16000	
C 61 4_462.0	462.0	1.9	1600	0.36	3500	16000	1.1	1600	0.20	3500	16000	
C 61 4_521.1	521.1	1.7	1600	0.32	3500	16000	1.0	1600	0.18	3500	16000	
C 61 4_571.2	571.2	1.6	1600	0.29	3500	16000	0.88	1600	0.16	3500	16000	
C 61 4_610.1	610.1	1.5	1600	0.27	3500	16000	0.82	1600	0.15	3500	16000	
C 61 4_668.8	668.8	1.3	1600	0.25	3500	16000	0.75	1600	0.14	3500	16000	
C 61 4_726.3	726.3	1.2	1600	0.23	3500	16000	0.69	1600	0.13	3500	16000	
C 61 4_796.1	796.1	1.1	1600	0.21	3500	16000	0.63	1600	0.12	3500	16000	

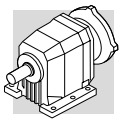

C 70 — 2300 Nm

	i	n_1 = 2800 min^{-1}					n_1 = 1400 min^{-1}					
		n_2 min^{-1}	M_{n2} Nm	P_{n1} kW	R_{n1} N	R_{n2} N	n_2 min^{-1}	M_{n2} Nm	P_{n1} kW	R_{n1} N	R_{n2} N	
C 70 2_4.6	4.6	613	1400	95	—	5590	306	1700	57	—	7100	
C 70 2_5.9	5.9	479	1550	82	—	5610	239	1900	50	—	6990	
C 70 2_6.3	6.3	448	1600	79	1980	6570	224	1950	48	2630	8250	
C 70 2_7.5	7.5	375	1550	64	—	7130	188	1950	40	—	8400	
C 70 2_8.0	8.0	350	1750	68	1760	6840	175	2100	41	2670	8880	
C 70 2_9.5	9.5	294	1600	52	770	8260	147	2000	32	620	9910	
C 70 2_10.2	10.2	274	1900	57	2000	7200	137	2100	32	4470	10800	
C 70 2_11.2	11.2	250	1600	44	1130	9350	125	2000	28	1070	11300	
C 70 2_13.0	13.0	215	2050	49	1860	7700	107	2100	25	5600	12900	
C 70 2_14.1	14.1	199	1700	37	1100	10100	99	2100	23	1280	12400	
C 70 2_15.3	15.3	183	2100	42	1810	8540	91	2100	21	5860	14300	
C 70 2_16.7	16.7	168	1700	31	1570	11400	84	2050	18.9	2350	14300	
C 70 2_19.3	19.3	145	2100	34	2730	10400	73	2100	16.8	6000	16300	
C 70 2_22.9	22.9	123	2100	28	3160	11800	61	2100	14.2	6060	18000	
C 70 2_27.7	27.7	101	2100	23	3570	13400	51	2100	11.7	6120	19900	
C 70 2_34.7	34.7	81	2100	18.7	3960	15400	40	2100	9.3	6180	22200	
C 70 3_41.3	41.3	68	1900	14.5	5670	18400	34	2300	8.8	7000	22800	
C 70 3_44.7	44.7	63	1900	13.4	5700	19100	31	2300	8.1	7000	23800	
C 70 3_52.2	52.2	54	2050	12.4	5680	19600	26.8	2300	7.0	7000	25000	
C 70 3_56.5	56.5	50	2050	11.4	5710	20400	24.8	2300	6.4	7000	25000	
C 70 3_65.9	65.9	43	2200	10.5	5670	21000	21.3	2300	5.5	7000	25000	
C 70 3_71.3	71.3	39	2200	9.7	5710	21900	19.6	2300	5.1	7000	25000	
C 70 3_81.4	81.4	34	2300	8.9	5680	22700	17.2	2300	4.5	7000	25000	
C 70 3_88.2	88.2	32	2300	8.2	5710	23600	15.9	2300	4.1	7000	25000	
C 70 3_103.8	103.8	27.0	2300	7.0	5700	25000	13.5	2300	3.5	7000	25000	
C 70 3_112.4	112.4	24.9	2300	6.4	5740	25000	12.5	2300	3.2	7000	25000	172
C 70 3_126.8	126.8	22.1	2300	5.7	5720	25000	11.0	2300	2.9	7000	25000	
C 70 3_137.4	137.4	20.4	2300	5.3	5750	25000	10.2	2300	2.6	7000	25000	
C 70 3_150.3	150.3	18.6	2300	4.8	5730	25000	9.3	2300	2.4	7000	25000	
C 70 3_162.8	162.8	17.2	2300	4.5	5760	25000	8.6	2300	2.2	7000	25000	
C 70 3_179.2	179.2	15.6	2300	4.0	5740	25000	7.8	2300	2.0	7000	25000	
C 70 3_194.1	194.1	14.4	2300	3.7	5770	25000	7.2	2300	1.9	7000	25000	
C 70 3_220.9	220.9	12.7	2250	3.2	5750	25000	6.3	2250	1.6	7000	25000	
C 70 3_239.3	239.3	11.7	2300	3.0	5770	25000	5.8	2300	1.5	7000	25000	
C 70 4_251.3	251.3	11.1	2300	2.9	2000	25000	5.6	2300	1.5	2620	25000	
C 70 4_272.2	272.2	10.3	2300	2.7	2030	25000	5.1	2300	1.4	2650	25000	
C 70 4_317.9	317.9	8.8	2300	2.3	2030	25000	4.4	2300	1.2	2650	25000	
C 70 4_344.3	344.3	8.1	2300	2.2	2050	25000	4.1	2300	1.1	2670	25000	
C 70 4_409.4	409.4	6.8	2300	1.8	2050	25000	3.4	2300	0.90	2670	25000	
C 70 4_443.5	443.5	6.3	2300	1.7	2070	25000	3.2	2300	0.80	2700	25000	
C 70 4_512.0	512.0	5.5	2300	1.4	2070	25000	2.7	2300	0.70	2680	25000	
C 70 4_554.7	554.7	5.0	2300	1.3	2090	25000	2.5	2300	0.70	2710	25000	
C 70 4_606.8	606.8	4.6	2300	1.2	2080	25000	2.3	2300	0.60	2700	25000	
C 70 4_657.3	657.3	4.3	2300	1.1	2100	25000	2.1	2300	0.60	2720	25000	
C 70 4_736.0	736.0	3.8	2300	1.0	2090	25000	1.9	2300	0.50	2700	25000	
C 70 4_797.3	797.3	3.5	2300	0.90	2110	25000	1.8	2300	0.50	2720	25000	
C 70 4_922.6	922.6	3.0	2300	0.80	2100	25000	1.5	2300	0.40	2710	25000	
C 70 4_999.5	999.5	2.8	2300	0.70	2110	25000	1.4	2300	0.40	2730	25000	
C 70 4_1069	1069	2.6	2300	0.70	2100	25000	1.3	2300	0.30	2720	25000	
C 70 4_1158	1158	2.4	2300	0.60	2100	25000	1.2	2300	0.30	2800	25000	
C 70 4_1362	1362	2.1	2300	0.50	2100	25000	1.0	2300	0.30	2800	25000	
C 70 4_1476	1476	1.9	2300	0.50	2100	25000	0.90	2300	0.30	2800	25000	

(—) Contact our technical service department advising radial load data (rotation direction, orientation, position)

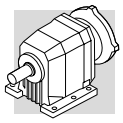

C 70 — 2300 Nm

	i	n_1 = 900 min^{-1}					n_1 = 500 min^{-1}					
		n_2 min^{-1}	M_{n2} Nm	P_{n1} kW	R_{n1} N	R_{n2} N	n_2 min^{-1}	M_{n2} Nm	P_{n1} kW	R_{n1} N	R_{n2} N	
C 70 2_4.6	4.6	197	1800	39	650	9360	109	1800	22	5500	13900	
C 70 2_5.9	5.9	154	1950	33	560	9980	85	2150	20	2890	13400	
C 70 2_6.3	6.3	144	2100	33	4260	10400	80	2100	18.5	7000	15500	
C 70 2_7.5	7.5	121	2100	28	1120	10800	67	2150	15.9	5400	15600	
C 70 2_8.0	8.0	113	2100	26	5800	12500	63	2100	14.5	7000	17800	
C 70 2_9.5	9.5	95	2150	22	2140	12400	53	2150	12.4	6990	18100	
C 70 2_10.2	10.2	88	2100	20	6870	14600	49	2100	11.3	7000	20200	
C 70 2_11.2	11.2	80	2150	19.0	2620	14000	45	2150	10.6	7000	19800	
C 70 2_13.0	13.0	69	2100	16.0	7000	16900	38	2100	8.9	7000	22800	
C 70 2_14.1	14.1	64	2150	15.1	3900	16000	35	2150	8.4	7000	22300	
C 70 2_15.3	15.3	59	2100	13.6	7000	18400	33	2100	7.5	7000	24600	
C 70 2_16.7	16.7	54	2050	12.2	5470	18500	29.9	2050	6.8	7000	25000	
C 70 2_19.3	19.3	47	2100	10.8	7000	20700	25.9	2100	6.0	7000	25000	
C 70 2_22.9	22.9	39	2100	9.1	7000	22500	21.9	2100	5.1	7000	25000	
C 70 2_27.7	27.7	32	2100	7.5	7000	24600	18.0	2100	4.2	7000	25000	
C 70 2_34.7	34.7	25.9	2100	6.0	7000	25000	14.4	2100	3.3	7000	25000	
C 70 3_41.3	41.3	21.8	2300	5.6	7000	25000	12.1	2300	3.1	7000	25000	
C 70 3_44.7	44.7	20.1	2300	5.2	7000	25000	11.2	2300	2.9	7000	25000	
C 70 3_52.2	52.2	17.3	2300	4.5	7000	25000	9.6	2300	2.5	7000	25000	
C 70 3_56.5	56.5	15.9	2300	4.1	7000	25000	8.8	2300	2.3	7000	25000	
C 70 3_65.9	65.9	13.7	2300	3.5	7000	25000	7.6	2300	2.0	7000	25000	
C 70 3_71.3	71.3	12.6	2300	3.3	7000	25000	7.0	2300	1.8	7000	25000	
C 70 3_81.4	81.4	11.1	2300	2.9	7000	25000	6.1	2300	1.6	7000	25000	
C 70 3_88.2	88.2	10.2	2300	2.6	7000	25000	5.7	2300	1.5	7000	25000	
C 70 3_103.8	103.8	8.7	2300	2.2	7000	25000	4.8	2300	1.2	7000	25000	
C 70 3_112.4	112.4	8.0	2300	2.1	7000	25000	4.4	2300	1.2	7000	25000	172
C 70 3_126.8	126.8	7.1	2300	1.8	7000	25000	3.9	2300	1.0	7000	25000	
C 70 3_137.4	137.4	6.6	2300	1.7	7000	25000	3.6	2300	0.90	7000	25000	
C 70 3_150.3	150.3	6.0	2300	1.6	7000	25000	3.3	2300	0.90	7000	25000	
C 70 3_162.8	162.8	5.5	2300	1.4	7000	25000	3.1	2300	0.80	7000	25000	
C 70 3_179.2	179.2	5.0	2300	1.3	7000	25000	2.8	2300	0.70	7000	25000	
C 70 3_194.1	194.1	4.6	2300	1.2	7000	25000	2.6	2300	0.70	7000	25000	
C 70 3_220.9	220.9	4.1	2250	1.0	7000	25000	2.3	2250	0.60	7000	25000	
C 70 3_239.3	239.3	3.8	2300	1.0	7000	25000	2.1	2300	0.50	7000	25000	
C 70 4_251.3	251.3	3.6	2300	0.90	2000	25000	2.0	2300	0.50	2620	25000	
C 70 4_272.2	272.2	3.3	2300	0.90	2030	25000	1.8	2300	0.50	2650	25000	
C 70 4_317.9	317.9	2.8	2300	0.70	2030	25000	1.6	2300	0.40	2650	25000	
C 70 4_344.3	344.3	2.6	2300	0.70	2050	25000	1.5	2300	0.40	2670	25000	
C 70 4_409.4	409.4	2.2	2300	0.60	2050	25000	1.2	2300	0.30	2670	25000	
C 70 4_443.5	443.5	2.0	2300	0.50	2070	25000	1.1	2300	0.30	2700	25000	
C 70 4_512.0	512.0	1.8	2300	0.50	2070	25000	1.0	2300	0.30	2680	25000	
C 70 4_554.7	554.7	1.6	2300	0.40	2090	25000	0.90	2300	0.20	2710	25000	
C 70 4_606.8	606.8	1.5	2300	0.40	2080	25000	0.80	2300	0.20	2700	25000	
C 70 4_657.3	657.3	1.4	2300	0.40	2100	25000	0.80	2300	0.20	2720	25000	
C 70 4_736.0	736.0	1.2	2300	0.30	2090	25000	0.70	2300	0.20	2700	25000	
C 70 4_797.3	797.3	1.1	2300	0.30	2110	25000	0.60	2300	0.20	2720	25000	
C 70 4_922.6	922.6	1.0	2300	0.30	2100	25000	0.50	2300	0.10	2710	25000	
C 70 4_999.5	999.5	0.90	2300	0.20	2110	25000	0.50	2300	0.10	2730	25000	
C 70 4_1069	1069	0.80	2300	0.20	2100	25000	0.50	2300	0.10	2720	25000	
C 70 4_1158	1158	0.80	2300	0.20	2100	25000	0.40	2300	0.10	2800	25000	
C 70 4_1362	1362	0.70	2300	0.20	2100	25000	0.40	2300	0.10	2800	25000	
C 70 4_1476	1476	0.60	2300	0.20	2100	25000	0.30	2300	0.10	2800	25000	

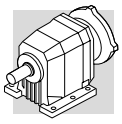

C 80 — 4000 Nm

	i	n_1 = 2800 min^{-1}					n_1 = 1400 min^{-1}					
		n_2 min^{-1}	M_{n2} Nm	P_{n1} kW	R_{n1} N	R_{n2} N	n_2 min^{-1}	M_{n2} Nm	P_{n1} kW	R_{n1} N	R_{n2} N	
C 80 2_5.6	5.6	496	2400	131	370	10900	248	3100	85	690	12300	
C 80 2_6.1	6.1	458	2450	124	890	11000	229	3150	80	1380	12700	
C 80 2_7.0	7.0	398	2650	116	350	11000	199	3350	73	910	12900	
C 80 2_7.6	7.6	367	2700	109	890	11300	183	3400	69	1600	13300	
C 80 2_8.9	8.9	316	2800	98	420	12100	158	3500	61	1120	14500	
C 80 2_9.6	9.6	292	3000	96	520	11300	146	3700	59	1380	13900	
C 80 2_11.1	11.1	252	2800	78	1110	14200	126	3500	49	1950	17100	
C 80 2_12.0	12.0	233	3000	77	1200	13500	116	3700	48	2190	16600	
C 80 2_13.8	13.8	203	2800	63	1420	16400	102	3500	39	2330	19800	
C 80 2_14.9	14.9	188	3000	62	1510	15800	94	3700	38	2560	19300	
C 80 2_16.7	16.7	168	2800	52	1840	18500	84	3500	32	2840	22300	
C 80 2_18.1	18.1	155	3000	50	1930	17900	78	3700	32	3060	22000	
C 80 2_20.5	20.5	136	2850	43	2000	20500	68	3550	27	3060	24800	
C 80 2_22.2	22.2	126	3000	42	2210	20300	63	3700	26	3400	24900	
C 80 2_24.0	24.0	117	2850	37	2090	22400	58	3550	23	3180	27000	
C 80 2_25.9	25.9	108	3000	36	2300	22300	54	3700	22	3510	27200	
C 80 2_31.3	31.3	89	3000	30	2480	24700	45	3700	18.2	3730	30000	
C 80 2_39.1	39.1	72	2500	19.7	3820	31000	36	3200	12.6	5060	35000	
C 80 3_43.5	43.5	64	3100	23	5610	28700	32	3800	13.8	7000	34800	
C 80 3_47.4	47.4	59	3100	21	5660	30000	29.5	3800	12.6	7000	35000	
C 80 3_57.3	57.3	49	3400	18.7	5620	30500	24.4	4000	11.0	7000	35000	
C 80 3_62.5	62.5	45	3400	17.1	5670	31800	22.4	4000	10.1	7000	35000	
C 80 3_70.5	70.5	40	3650	16.3	5620	32200	19.9	4000	8.9	7000	35000	
C 80 3_76.9	76.9	36	3600	14.8	5670	33900	18.2	4000	8.2	7000	35000	
C 80 3_89.3	89.3	31	3900	13.8	5620	34700	15.7	4000	7.1	7000	35000	
C 80 3_97.4	97.4	28.7	3900	12.6	5670	35000	14.4	4000	6.5	7000	35000	
C 80 3_109.5	109.5	25.5	4000	11.5	5630	35000	12.8	4000	5.8	7000	35000	175
C 80 3_119.5	119.5	23.4	4000	10.6	5680	35000	11.7	4000	5.3	7000	35000	
C 80 3_136.7	136.7	20.5	4000	9.2	5660	35000	10.2	4000	4.6	7000	35000	
C 80 3_149.1	149.1	18.8	4000	8.5	5700	35000	9.4	4000	4.2	7000	35000	
C 80 3_169.0	169.0	16.6	4000	7.5	5680	35000	8.3	4000	3.7	7000	35000	
C 80 3_184.4	184.4	15.2	4000	6.8	5720	35000	7.6	4000	3.4	7000	35000	
C 80 3_197.9	197.9	14.2	3800	6.1	5710	35000	7.1	3800	3.0	7000	35000	
C 80 3_215.8	215.8	13.0	4000	5.8	5730	35000	6.5	4000	2.9	7000	35000	
C 80 4_261.9	261.9	10.7	4000	4.9	1850	35000	5.3	4000	2.5	2470	35000	
C 80 4_285.7	285.7	9.8	4000	4.5	1890	35000	4.9	4000	2.3	2510	35000	
C 80 4_334.3	334.3	8.4	4000	3.9	1880	35000	4.2	4000	1.9	2500	35000	
C 80 4_364.7	364.7	7.7	4000	3.5	1920	35000	3.8	4000	1.8	2540	35000	
C 80 4_417.5	417.5	6.7	4000	3.1	1910	35000	3.4	4000	1.5	2530	35000	
C 80 4_455.4	455.4	6.1	4000	2.8	1950	35000	3.1	4000	1.4	2570	35000	
C 80 4_529.3	529.3	5.3	4000	2.4	1940	35000	2.6	4000	1.2	2550	35000	
C 80 4_577.4	577.4	4.8	4000	2.2	1970	35000	2.4	4000	1.1	2590	35000	
C 80 4_664.3	664.3	4.2	4000	1.9	1960	35000	2.1	4000	1.0	2570	35000	
C 80 4_724.7	724.7	3.9	4000	1.8	1990	35000	1.9	4000	0.90	2610	35000	
C 80 4_783.4	783.4	3.6	4000	1.6	1970	35000	1.8	4000	0.80	2590	35000	
C 80 4_854.6	854.6	3.3	4000	1.5	2000	35000	1.6	4000	0.80	2620	35000	
C 80 4_945.7	945.7	3.0	4000	1.4	1980	35000	1.5	4000	0.70	2600	35000	
C 80 4_1032	1032	2.7	4000	1.2	2010	35000	1.4	4000	0.60	2630	35000	
C 80 4_1168	1168	2.4	4000	1.1	1980	35000	1.2	4000	0.60	2600	35000	
C 80 4_1274	1274	2.2	4000	1.0	2020	35000	1.1	4000	0.50	2640	35000	
C 80 4_1358	1358	2.1	4000	0.90	1990	35000	1.0	4000	0.50	2610	35000	
C 80 4_1481	1481	1.9	4000	0.90	2030	35000	0.90	4000	0.40	2640	35000	

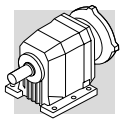

C 80 — 4000 Nm

	i	n_1 = 900 min^{-1}					n_1 = 500 min^{-1}					
		n_2 min^{-1}	M_{n2} Nm	P_{n1} kW	R_{n1} N	R_{n2} N	n_2 min^{-1}	M_{n2} Nm	P_{n1} kW	R_{n1} N	R_{n2} N	
C 80 2_5.6	5.6	160	3500	62	1480	14400	89	3500	34	4970	21600	
C 80 2_6.1	6.1	147	3600	58	2100	14400	82	3700	33	5270	21200	
C 80 2_7.0	7.0	128	3500	49	2630	17000	71	3500	27	6130	24600	
C 80 2_7.6	7.6	118	3650	47	3060	16800	66	3650	26	6550	24600	
C 80 2_8.9	8.9	102	3500	39	3330	19900	56	3500	22	6800	27800	
C 80 2_9.6	9.6	94	3700	38	3590	19400	52	3700	21	7000	27700	
C 80 2_11.1	11.1	81	3500	31	4160	22800	45	3500	17.4	7000	31200	
C 80 2_12.0	12.0	75	3700	31	4400	22500	42	3700	17.0	7000	31200	
C 80 2_13.8	13.8	65	3500	25	4540	25700	36	3500	14.0	7000	34700	
C 80 2_14.9	14.9	60	3700	25	4770	25500	34	3700	13.7	7000	34700	
C 80 2_16.7	16.7	54	3500	21	5050	28500	30	3500	11.6	7000	35000	
C 80 2_18.1	18.1	50	3700	20	5280	28400	27.7	3700	11.3	7000	35000	
C 80 2_20.5	20.5	44	3550	17.2	5270	31400	24.4	3550	9.5	7000	35000	
C 80 2_22.2	22.2	40	3700	16.5	5610	31600	22.5	3700	9.2	7000	35000	
C 80 2_24.0	24.0	38	3550	14.7	5390	33800	20.9	3550	8.2	7000	35000	
C 80 2_25.9	25.9	35	3700	14.1	5730	34200	19.3	3700	7.9	7000	35000	
C 80 2_31.3	31.3	28.7	3700	11.7	5940	35000	16.0	3700	6.5	7000	35000	
C 80 2_39.1	39.1	23.0	3200	8.1	7000	35000	12.8	3200	4.5	7000	35000	
C 80 3_43.5	43.5	20.7	4000	9.3	7000	35000	11.5	4000	5.2	7000	35000	
C 80 3_47.4	47.4	19.0	4000	8.5	7000	35000	10.5	4000	4.7	7000	35000	
C 80 3_57.3	57.3	15.7	4000	7.1	7000	35000	8.7	4000	3.9	7000	35000	
C 80 3_62.5	62.5	14.4	4000	6.5	7000	35000	8.0	4000	3.6	7000	35000	
C 80 3_70.5	70.5	12.8	4000	5.7	7000	35000	7.1	4000	3.2	7000	35000	
C 80 3_76.9	76.9	11.7	4000	5.3	7000	35000	6.5	4000	2.9	7000	35000	
C 80 3_89.3	89.3	10.1	4000	4.5	7000	35000	5.6	4000	2.5	7000	35000	
C 80 3_97.4	97.4	9.2	4000	4.2	7000	35000	5.1	4000	2.3	7000	35000	175
C 80 3_109.5	109.5	8.2	4000	3.7	7000	35000	4.6	4000	2.1	7000	35000	
C 80 3_119.5	119.5	7.5	4000	3.4	7000	35000	4.2	4000	1.9	7000	35000	
C 80 3_136.7	136.7	6.6	4000	3.0	7000	35000	3.7	4000	1.6	7000	35000	
C 80 3_149.1	149.1	6.0	4000	2.7	7000	35000	3.4	4000	1.5	7000	35000	
C 80 3_169.0	169.0	5.3	4000	2.4	7000	35000	3.0	4000	1.3	7000	35000	
C 80 3_184.4	184.4	4.9	4000	2.2	7000	35000	2.7	4000	1.2	7000	35000	
C 80 3_197.9	197.9	4.5	3800	1.9	7000	35000	2.5	3800	1.1	7000	35000	
C 80 3_215.8	215.8	4.2	4000	1.9	7000	35000	2.3	4000	1.0	7000	35000	
C 80 4_261.9	261.9	3.4	4000	1.6	2950	35000	1.9	4000	0.90	3500	35000	
C 80 4_285.7	285.7	3.2	4000	1.4	2990	35000	1.8	4000	0.80	3500	35000	
C 80 4_334.3	334.3	2.7	4000	1.2	2980	35000	1.5	4000	0.70	3500	35000	
C 80 4_364.7	364.7	2.5	4000	1.1	3020	35000	1.4	4000	0.60	3500	35000	
C 80 4_417.5	417.5	2.2	4000	1.0	3000	35000	1.2	4000	0.60	3500	35000	
C 80 4_455.4	455.4	2.0	4000	0.90	3050	35000	1.1	4000	0.50	3500	35000	
C 80 4_529.3	529.3	1.7	4000	0.80	3030	35000	0.90	4000	0.40	3500	35000	
C 80 4_577.4	577.4	1.6	4000	0.70	3070	35000	0.90	4000	0.40	3500	35000	
C 80 4_664.3	664.3	1.4	4000	0.60	3050	35000	0.80	4000	0.30	3500	35000	
C 80 4_724.7	724.7	1.2	4000	0.60	3090	35000	0.70	4000	0.30	3500	35000	
C 80 4_783.4	783.4	1.1	4000	0.50	3060	35000	0.60	4000	0.30	3500	35000	
C 80 4_854.6	854.6	1.1	4000	0.50	3100	35000	0.60	4000	0.30	3500	35000	
C 80 4_945.7	945.7	1.0	4000	0.40	3070	35000	0.50	4000	0.20	3500	35000	
C 80 4_1032	1032	0.90	4000	0.40	3110	35000	0.50	4000	0.20	3500	35000	
C 80 4_1168	1168	0.80	4000	0.40	3080	35000	0.40	4000	0.20	3500	35000	
C 80 4_1274	1274	0.70	4000	0.30	3110	35000	0.40	4000	0.20	3500	35000	
C 80 4_1358	1358	0.70	4000	0.30	3090	35000	0.40	4000	0.20	3500	35000	
C 80 4_1481	1481	0.60	4000	0.30	3120	35000	0.30	4000	0.20	3500	35000	

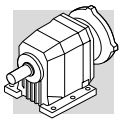

C 90 — 7200 Nm

	i	n_1 = 2800 min^{-1}					n_1 = 1400 min^{-1}					
		n_2 min^{-1}	M_{n2} Nm	P_{n1} kW	R_{n1} N	R_{n2} N	n_2 min^{-1}	M_{n2} Nm	P_{n1} kW	R_{n1} N	R_{n2} N	
C 90 2_5.2	5.2	542	3500	209	1700	12800	271	4300	128	2170	15800	
C 90 2_5.6	5.6	500	3600	198	3240	12800	250	4400	121	4250	16000	
C 90 2_6.8	6.8	414	3850	176	1860	13400	207	4750	108	2210	16400	
C 90 2_7.3	7.3	383	3950	167	3470	13500	191	4850	102	4360	16700	
C 90 2_8.3	8.3	336	4150	154	2010	13800	168	5100	94	2540	17100	
C 90 2_9.0	9.0	310	4250	145	3660	14000	155	5200	89	4720	17500	
C 90 2_10.4	10.4	270	4500	134	990	14200	135	5550	83	1150	17400	
C 90 2_11.2	11.2	249	4600	126	2750	14400	125	5650	78	3460	17800	
C 90 2_12.8	12.8	219	4850	117	580	14700	109	5950	72	840	18200	
C 90 2_13.9	13.9	202	4900	109	2700	15300	101	6050	67	3220	18700	
C 90 2_16.0	16.0	175	5050	98	690	16800	88	6200	60	950	20800	
C 90 2_17.3	17.3	162	5300	94	1670	15900	81	6500	58	2200	19800	
C 90 2_18.7	18.7	150	5050	83	1140	19600	75	6200	51	1500	24300	
C 90 2_20.2	20.2	138	5400	82	1540	17900	69	6600	50	2160	22500	
C 90 2_22.9	22.9	122	5050	68	2110	22400	61	6200	42	2700	27600	
C 90 2_24.8	24.8	113	5400	67	2500	21900	56	6600	41	3340	27300	
C 90 2_27.2	27.2	103	4500	51	6160	26000	52	5500	31	7820	32200	
C 90 2_29.4	29.4	95	4800	50	6560	26000	48	5900	31	8130	32000	
C 90 2_35.1	35.1	80	4400	39	8090	29400	40	5400	24	11100	36300	
C 90 3_39.4	39.4	71	6350	51	10800	23900	36	7100	28	13700	32900	
C 90 3_43.0	43.0	65	6500	48	10800	24700	33	7200	26	13800	34000	
C 90 3_50.3	50.3	56	6800	43	10800	26000	27.8	7100	22	13800	37000	
C 90 3_54.9	54.9	51	7000	40	10900	26500	25.5	7200	21	13900	38300	
C 90 3_59.2	59.2	47	7100	38	10800	27700	23.6	7100	18.9	13900	40000	
C 90 3_64.6	64.6	43	7200	35	10900	29100	21.7	7200	17.6	14000	41300	
C 90 3_74.4	74.4	38	7100	30	10900	31900	18.8	7100	15.0	14000	44400	
C 90 3_81.2	81.2	34	7200	28	10900	33000	17.2	7200	14.0	14100	45900	178
C 90 3_88.2	88.2	32	7100	25	11000	34800	15.9	7100	12.7	14000	47900	
C 90 3_96.2	96.2	29.1	7200	24	11000	35900	14.5	7200	11.8	14100	49400	
C 90 3_107.0	107.0	26.2	7100	21	11000	38100	13.1	7100	10.5	14100	52100	
C 90 3_116.7	116.7	24.0	7200	19.4	11000	39400	12.0	7200	9.7	14100	53700	
C 90 3_134.1	134.1	20.9	7100	16.7	11000	42400	10.4	7100	8.3	14100	57300	
C 90 3_146.3	146.3	19.1	7200	15.5	11000	43800	9.6	7200	7.8	14200	59000	
C 90 3_157.8	157.8	17.7	7100	14.2	11000	45600	8.9	7100	7.1	14100	60000	
C 90 3_172.1	172.1	16.3	7200	13.2	11000	47100	8.1	7200	6.6	14200	60000	
C 90 4_212.4	212.4	13.2	7200	10.9	—	60000	6.6	7200	5.5	1180	60000	
C 90 4_231.7	231.7	12.1	7200	10.0	—	60000	6.0	7200	5.0	1560	60000	
C 90 4_268.5	268.5	10.4	7200	8.6	—	60000	5.2	7200	4.3	1540	60000	
C 90 4_292.9	292.9	9.6	7200	7.9	—	60000	4.8	7200	4.0	1880	60000	
C 90 4_339.0	339.0	8.3	7200	6.8	—	60000	4.1	7200	3.4	1720	60000	
C 90 4_369.8	369.8	7.6	7200	6.3	—	60000	3.8	7200	3.1	2050	60000	
C 90 4_419.0	419.0	6.7	7200	5.5	—	60000	3.3	7200	2.8	1890	60000	
C 90 4_457.1	457.1	6.1	7200	5.1	—	60000	3.1	7200	2.5	2210	60000	
C 90 4_534.2	534.2	5.2	7200	4.3	—	60000	2.6	7200	2.2	2090	60000	
C 90 4_582.8	582.8	4.8	7200	4.0	—	60000	2.4	7200	2.0	2270	60000	
C 90 4_652.8	652.8	4.3	7200	3.6	—	60000	2.1	7200	1.8	2160	60000	
C 90 4_712.2	712.2	3.9	7200	3.3	—	60000	2.0	7200	1.6	2290	60000	
C 90 4_773.6	773.6	3.3	7200	3.0	—	60000	1.8	7200	1.5	2250	60000	
C 90 4_844.0	844.0	3.0	7200	2.7	—	60000	1.7	7200	1.4	2310	60000	
C 90 4_922.3	922.3	2.8	7200	2.5	—	60000	1.5	7200	1.3	2260	60000	
C 90 4_1006	1006	2.5	7200	2.3	—	60000	1.4	7200	1.2	2320	60000	
C 90 4_1137	1137	2.3	7200	2.0	—	60000	1.2	7200	1.0	2270	60000	
C 90 4_1240	1240	2.2	7200	1.9	—	60000	1.1	7200	0.90	2230	60000	

(—) Contact our technical service department advising radial load data (rotation direction, orientation, position)

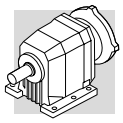

C 90 — 7200 Nm

	i	n_1 = 900 min^{-1}					n_1 = 500 min^{-1}					
		n_2	M_{n2}	P_{n1}	R_{n1}	R_{n2}	n_2	M_{n2}	P_{n1}	R_{n1}	R_{n2}	
		min^{-1}	Nm	kW	N	N	min^{-1}	Nm	kW	N	N	
C 90 2_5.2	5.2	174	4900	94	2560	18200	97	5850	62	3010	21600	
C 90 2_5.6	5.6	161	5050	89	4640	18100	89	6000	59	5720	21800	
C 90 2_6.8	6.8	133	5450	80	2310	18500	74	6200	51	5130	24600	
C 90 2_7.3	7.3	123	5550	75	4890	18900	68	6550	49	6340	23200	
C 90 2_8.3	8.3	108	5850	70	2700	19300	60	6200	41	8870	27800	
C 90 2_9.0	9.0	100	5950	65	5300	19800	55	6600	40	9660	27600	
C 90 2_10.4	10.4	87	6200	59	2250	21000	48	6200	33	11000	31000	
C 90 2_11.2	11.2	80	6450	57	3960	20400	45	6600	32	11700	30800	
C 90 2_12.8	12.8	70	6250	48	4500	25300	39	6250	27	13200	34100	
C 90 2_13.9	13.9	65	6550	47	5830	24400	36	6550	26	14600	34300	
C 90 2_16.0	16.0	56	6200	38	6570	28700	31	6200	21	15000	38000	
C 90 2_17.3	17.3	52	6550	38	7530	28600	28.9	6550	21	15000	38100	
C 90 2_18.7	18.7	48	6200	33	7120	31000	26.7	6200	18.3	15000	40700	
C 90 2_20.2	20.2	44	6600	32	7780	30800	24.8	6600	18.0	15000	40700	
C 90 2_22.9	22.9	39	6200	27	8310	34200	21.8	6200	14.9	15000	44500	
C 90 2_24.8	24.8	36	6600	26	8950	34100	20.2	6600	14.6	15000	44600	
C 90 2_27.2	27.2	33	5500	20	13400	39200	18.4	5500	11.2	15000	50000	
C 90 2_29.4	29.4	31	5900	19.9	13700	39100	17.0	5900	11.0	15000	50200	
C 90 2_35.1	35.1	25.6	5400	15.3	14100	43800	14.2	5400	8.5	15000	55500	
C 90 3_39.4	39.4	22.8	7100	18.3	15000	40600	12.7	7100	10.1	15000	40600	
C 90 3_43.0	43.0	20.9	7200	17.0	15000	42000	11.6	7200	9.4	15000	42000	
C 90 3_50.3	50.3	17.9	7100	14.3	15000	45400	9.9	7100	7.9	15000	45400	
C 90 3_54.9	54.9	16.4	7200	13.3	15000	46900	9.1	7200	7.4	15000	46900	
C 90 3_59.2	59.2	15.2	7100	12.2	15000	48800	8.4	7100	6.8	15000	48800	
C 90 3_64.6	64.6	13.9	7200	11.3	15000	50400	7.7	7200	6.3	15000	50400	
C 90 3_74.4	74.4	12.1	7100	9.7	15000	53800	6.7	7100	5.4	15000	53800	
C 90 3_81.2	81.2	11.1	7200	9.0	15000	55500	6.2	7200	5.0	15000	55500	178
C 90 3_88.2	88.2	10.2	7100	8.2	15000	57800	5.7	7100	4.5	15000	57800	
C 90 3_96.2	96.2	9.4	7200	7.6	15000	59600	5.2	7200	4.2	15000	59600	
C 90 3_107.0	107.0	8.4	7100	6.7	15000	60000	4.7	7100	3.7	15000	60000	
C 90 3_116.7	116.7	7.7	7200	6.3	15000	60000	4.3	7200	3.5	15000	60000	
C 90 3_134.1	134.1	6.7	7100	5.4	15000	60000	3.7	7100	3.0	15000	60000	
C 90 3_146.3	146.3	6.2	7200	5.0	15000	60000	3.4	7200	2.8	15000	60000	
C 90 3_157.8	157.8	5.7	7100	4.6	15000	60000	3.2	7100	2.5	15000	60000	
C 90 3_172.1	172.1	5.2	7200	4.2	15000	60000	2.9	7200	2.4	15000	60000	
C 90 4_212.4	212.4	4.2	7200	3.5	2090	60000	2.4	7200	2.0	3210	60000	
C 90 4_231.7	231.7	3.9	7200	3.2	2460	60000	2.2	7200	1.8	3290	60000	
C 90 4_268.5	268.5	3.4	7200	2.8	2440	60000	1.9	7200	1.5	3300	60000	
C 90 4_292.9	292.9	3.1	7200	2.5	2620	60000	1.7	7200	1.4	3370	60000	
C 90 4_339.0	339.0	2.7	7200	2.2	2590	60000	1.5	7200	1.2	3340	60000	
C 90 4_369.8	369.8	2.4	7200	2.0	2660	60000	1.4	7200	1.1	3420	60000	
C 90 4_419.0	419.0	2.1	7200	1.8	2630	60000	1.2	7200	1.0	3390	60000	
C 90 4_457.1	457.1	2.0	7200	1.6	2700	60000	1.1	7200	0.90	3460	60000	
C 90 4_534.2	534.2	1.7	7200	1.4	2680	60000	0.90	7200	0.80	3380	60000	
C 90 4_582.8	582.8	1.5	7200	1.3	2750	60000	0.90	7200	0.70	3500	60000	
C 90 4_652.8	652.8	1.4	7200	1.1	2700	60000	0.80	7200	0.60	3450	60000	
C 90 4_712.2	712.2	1.3	7200	1.0	2760	60000	0.70	7200	0.60	3500	60000	
C 90 4_773.6	773.6	1.2	7200	1.0	2720	60000	0.60	7200	0.50	3480	60000	
C 90 4_844.0	844.0	1.1	7200	0.90	2790	60000	0.60	7200	0.50	3500	60000	
C 90 4_922.3	922.3	1.0	7200	0.80	2730	60000	0.50	7200	0.40	3490	60000	
C 90 4_1006	1006	0.90	7200	0.70	2800	60000	0.50	7200	0.40	3500	60000	
C 90 4_1137	1137	0.80	7200	0.70	2740	60000	0.40	7200	0.40	3500	60000	
C 90 4_1240	1240	0.70	7200	0.60	2800	60000	0.40	7200	0.30	3500	60000	

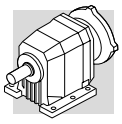

C 100 — 12000 Nm

	i	n_1 = 2800 min^{-1}					n_1 = 1400 min^{-1}					
		n_2	M_{n2}	P_{n1}	R_{n1}	R_{n2}	n_2	M_{n2}	P_{n1}	R_{n1}	R_{n2}	
		min^{-1}	Nm	kW	N	N	min^{-1}	Nm	kW	N	N	
C 100 2_4.9	4.9	569	5500	345	1900	20600	285	6800	213	3790	25300	
C 100 2_5.3	5.3	525	5650	327	2790	21000	263	6950	201	4940	25800	
C 100 2_6.5	6.5	429	6150	291	1920	21800	215	7550	179	3950	27000	
C 100 2_7.1	7.1	396	6200	271	3100	22700	198	7650	167	5270	27900	
C 100 2_8.4	8.4	335	6700	248	1870	22800	168	8200	152	3970	28500	
C 100 2_9.0	9.0	309	6800	232	2950	23500	155	8350	142	5190	29200	
C 100 2_10.1	10.1	278	7100	217	1930	24100	139	8750	134	3900	29500	
C 100 2_10.9	10.9	256	7100	200	3240	25700	128	8750	124	5460	31600	
C 100 2_12.5	12.5	225	7650	190	1360	24900	112	9400	117	3260	30800	
C 100 2_13.5	13.5	208	7700	176	2600	26300	104	9500	109	4680	32100	
C 100 2_15.2	15.2	184	8100	164	1270	26600	92	10000	101	2680	32500	
C 100 2_16.5	16.5	170	8250	154	2320	27200	85	10150	95	4420	33600	
C 100 2_18.7	18.7	150	8200	136	1500	30800	75	10000	83	3600	38000	
C 100 2_20.2	20.2	138	8100	124	3047	32200	69	10000	76	5210	39600	
C 100 2_22.2	22.2	126	7500	104	3570	35800	63	9200	64	5960	44100	
C 100 2_24.1	24.1	116	8100	104	3620	35200	58	10000	64	5900	43300	
C 100 2_29.6	29.6	95	6900	72	6380	42400	47	8500	44	9220	52200	
C 100 3_34.3	34.3	82	10350	95	9790	33300	41	11700	54	13000	46400	
C 100 3_36.9	36.9	76	10650	91	10200	34500	38	11800	50	13100	48000	
C 100 3_42.9	42.9	65	11350	83	9640	33200	33	12000	44	13100	51200	
C 100 3_46.2	46.2	61	11700	80	10100	33100	30	12000	41	13300	53100	
C 100 3_53.3	53.3	53	12000	71	9450	36400	26.3	12000	36	13200	56900	
C 100 3_57.4	57.4	49	12000	66	10200	39500	24.4	12000	33	13400	59000	
C 100 3_64.5	64.5	43	12000	59	9950	44100	21.7	12000	29	13400	62300	
C 100 3_69.4	69.4	40	12000	54	10400	45900	20.2	12000	27	13500	64500	
C 100 3_79.4	79.4	35	12000	48	10300	49200	17.6	12000	24	13500	68600	181
C 100 3_85.6	85.6	33	12000	44	10400	51100	16.4	12000	22	13600	70900	
C 100 3_92.7	92.7	30	12000	41	10400	53200	15.1	12000	20	13500	73500	
C 100 3_99.8	99.8	28.1	12000	38	10500	55200	14.0	12000	19.0	13600	75900	
C 100 3_111.9	111.9	25.0	12000	34	10400	58300	12.5	12000	16.9	13500	79800	
C 100 3_120.5	120.5	23.2	12000	31	10500	60400	11.6	12000	15.7	13700	82400	
C 100 3_139.7	139.7	20.0	11050	25	10600	67400	10.0	11050	12.5	13700	85000	
C 100 3_150.4	150.4	18.6	12000	25	10600	66900	9.3	12000	12.6	13700	85000	
C 100 4_162.1	162.1	17.3	12000	24	—	85000	8.6	12000	11.9	—	85000	
C 100 4_185.4	185.4	15.1	12000	21	—	85000	7.6	12000	10.4	—	85000	
C 100 4_199.6	199.6	14.0	12000	19.4	—	85000	7.0	12000	9.7	—	85000	
C 100 4_244.2	244.2	11.5	12000	15.8	—	85000	5.7	12000	7.9	—	85000	
C 100 4_263.0	263.0	10.6	12000	14.7	—	85000	5.3	12000	7.4	—	85000	
C 100 4_300.5	300.5	9.3	12000	12.9	—	85000	4.7	12000	6.4	—	85000	
C 100 4_323.6	323.6	8.7	12000	11.9	—	85000	4.3	12000	6.0	—	85000	
C 100 4_380.5	380.5	7.4	12000	10.2	—	85000	3.7	12000	5.1	—	85000	
C 100 4_409.8	409.8	6.8	12000	9.4	—	85000	3.4	12000	4.7	—	85000	
C 100 4_466.7	466.7	6.0	12000	8.3	—	85000	3.0	12000	4.1	—	85000	
C 100 4_502.6	502.6	5.6	12000	7.7	—	85000	2.8	12000	3.8	—	85000	
C 100 4_582.6	582.6	4.8	12000	6.6	—	85000	2.4	12000	3.3	—	85000	
C 100 4_627.4	627.4	4.5	12000	6.2	—	85000	2.2	12000	3.1	—	85000	
C 100 4_720.3	720.3	3.9	12000	5.4	—	85000	1.9	12000	2.7	—	85000	
C 100 4_775.7	775.7	3.6	12000	5.0	—	85000	1.8	12000	2.5	—	85000	
C 100 4_843.3	843.3	3.3	12000	4.6	—	85000	1.7	12000	2.3	—	85000	
C 100 4_908.2	908.2	3.1	12000	4.3	—	85000	1.5	12000	2.1	830	85000	
C 100 4_1004	1004	2.8	12000	3.9	—	85000	1.4	12000	1.9	—	85000	
C 100 4_1081	1081	2.6	12000	3.6	—	85000	1.3	12000	1.8	870	85000	

(—) Contact our technical service department advising radial load data (rotation direction, orientation, position)

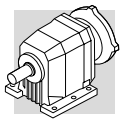

C 100 — 12000 Nm

	i	n_1 = 900 min^{-1}					n_1 = 500 min^{-1}					
		n_2	M_{n2}	P_{n1}	R_{n1}	R_{n2}	n_2	M_{n2}	P_{n1}	R_{n1}	R_{n2}	
		min^{-1}	Nm	kW	N	N	min^{-1}	Nm	kW	N	N	
C 100 2_4.9	4.9	183	7800	157	5310	28800	102	9300	104	6720	34400	181
C 100 2_5.3	5.3	169	7950	148	6680	29500	94	9450	98	9740	35200	
C 100 2_6.5	6.5	138	8600	131	5670	31000	77	10250	87	7540	37000	
C 100 2_7.1	7.1	127	8750	123	7050	31800	71	10450	81	10100	37800	
C 100 2_8.4	8.4	108	9350	111	5670	32600	60	10950	72	8530	40100	
C 100 2_9.0	9.0	99	9500	104	7080	33600	55	11350	69	10100	39900	
C 100 2_10.1	10.1	89	10000	98	5540	33600	50	10900	60	10600	44500	
C 100 2_10.9	10.9	82	10150	92	6980	34700	46	11500	58	11300	44300	
C 100 2_12.5	12.5	72	10700	85	3910	35400	40	10850	48	11700	49600	
C 100 2_13.5	13.5	67	10850	80	6440	36700	37	11450	47	12300	49500	
C 100 2_15.2	15.2	59	10800	70	5940	40800	33	10800	39	13000	54700	
C 100 2_16.5	16.5	55	11500	69	6320	39100	30	11500	38	13400	54500	
C 100 2_18.7	18.7	48	10900	58	6310	45100	26.8	10900	32	13400	59800	
C 100 2_20.2	20.2	45	11500	56	6890	45000	24.7	11500	31	14000	60100	
C 100 2_22.2	22.2	40	9850	44	9170	52200	22.5	9850	24	15000	67800	
C 100 2_24.1	24.1	37	10800	44	8930	51200	20.7	10800	25	15000	67200	
C 100 2_29.6	29.6	30	9100	31	12600	61400	16.9	9100	17.0	15000	78300	
C 100 3_34.3	34.3	26.2	11700	35	15000	57800	14.6	11700	19.2	15000	75500	
C 100 3_36.9	36.9	24.4	11800	32	15000	59600	13.5	11800	18.0	15000	77700	
C 100 3_42.9	42.9	21.0	12000	28	15000	63400	11.6	12000	15.7	15000	82300	
C 100 3_46.2	46.2	19.5	12000	26	15000	65600	10.8	12000	14.6	15000	84900	
C 100 3_53.3	53.3	16.9	12000	23	15000	69900	9.4	12000	12.7	15000	85000	
C 100 3_57.4	57.4	15.7	12000	21	15000	72300	8.7	12000	11.8	15000	85000	
C 100 3_64.5	64.5	14.0	12000	18.6	15000	76100	7.8	12000	10.5	15000	85000	
C 100 3_69.4	69.4	13.0	12000	17.5	15000	78600	7.2	12000	9.7	15000	85000	
C 100 3_79.4	79.4	11.3	12000	15.3	15000	83300	6.3	12000	8.5	15000	85000	
C 100 3_85.6	85.6	10.5	12000	14.2	15000	85000	5.8	12000	7.9	15000	85000	
C 100 3_92.7	92.7	9.7	12000	13.1	15000	85000	5.4	12000	7.3	15000	85000	
C 100 3_99.8	99.8	9.0	12000	12.2	15000	85000	5.0	12000	6.8	15000	85000	
C 100 3_111.9	111.9	8.0	12000	10.9	15000	85000	4.5	12000	6.0	15000	85000	
C 100 3_120.5	120.5	7.5	12000	10.1	15000	85000	4.1	12000	5.6	15000	85000	
C 100 3_139.7	139.7	6.4	11500	8.0	15000	85000	3.6	11050	4.5	15000	85000	
C 100 3_150.4	150.4	6.0	12000	8.1	15000	85000	3.3	12000	4.5	15000	85000	
C 100 4_162.1	162.1	5.6	12000	7.7	—	85000	3.1	12000	4.3	—	85000	
C 100 4_185.4	185.4	4.9	12000	6.7	—	85000	2.7	12000	3.7	920	85000	
C 100 4_199.6	199.6	4.5	12000	6.2	—	85000	2.5	12000	3.5	1430	85000	
C 100 4_244.2	244.2	3.7	12000	5.1	—	85000	2.0	12000	2.8	1490	85000	
C 100 4_263.0	263.0	3.4	12000	4.7	—	85000	1.9	12000	2.6	1950	85000	
C 100 4_300.5	300.5	3.0	12000	4.1	—	85000	1.7	12000	2.3	1840	85000	
C 100 4_323.6	323.6	2.8	12000	3.8	850	85000	1.5	12000	2.1	2280	85000	
C 100 4_380.5	380.5	2.4	12000	3.3	700	85000	1.3	12000	1.8	2130	85000	
C 100 4_409.8	409.8	2.2	12000	3.0	1120	85000	1.2	12000	1.7	2550	85000	
C 100 4_466.7	466.7	1.9	12000	2.7	910	85000	1.1	12000	1.5	2340	85000	
C 100 4_502.6	502.6	1.8	12000	2.5	1320	85000	1.0	12000	1.4	2740	85000	
C 100 4_582.6	582.6	1.5	12000	2.1	1100	85000	0.90	12000	1.2	2520	85000	
C 100 4_627.4	627.4	1.4	12000	2.0	1490	85000	0.80	12000	1.1	2910	85000	
C 100 4_720.3	720.3	1.2	12000	1.7	1270	85000	0.70	12000	1.0	2700	85000	
C 100 4_775.7	775.7	1.2	12000	1.6	1650	85000	0.60	12000	0.90	3070	85000	
C 100 4_843.3	843.3	1.1	12000	1.5	1360	85000	0.60	12000	0.80	2790	85000	
C 100 4_908.2	908.2	1.0	12000	1.4	1730	85000	0.60	12000	0.80	3160	85000	
C 100 4_1004	1004	0.90	12000	1.2	1400	85000	0.50	12000	0.70	2830	85000	
C 100 4_1081	1081	0.90	12000	1.1	1770	85000	0.50	12000	0.60	3170	85000	

(—) Contact our technical service department advising radial load data (rotation direction, orientation, position)

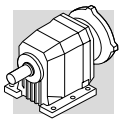

27 MOTOR AVAILABILITY

Please be aware that motor-gearbox combinations resulting from the following charts are purely based on geometrical compatibility.

When selecting a gearmotor, refer to procedure specified at paragraph 12 and observe particularly the condition $S \geq f_S$.

(B 22)

		IEC_ BN BE BX BXN (IM B5)																							
		BN	BE	BX	BXN	BN	BE	BX	BXN	BN	BE	BX	BXN	BN	BE	BX	BXN	BN	BE	BX	BXN	BN	BE	BX	BXN
P_{n1}(#) [kW]	2p	0.37	—	—	—	0.75	—	—	—	1.5	1.1	—	—	2.2	2.2	—	—	4	3	—	—	4	4	—	—
	4p	0.25	0.18	0.25	0.18	0.55	0.37	0.37	0.37	1.1	0.75	0.75	0.75	1.85	1.5	1.5	1.5	3	3	3	3	4	4	4	4
	6p	0.12	—	—	—	0.37	—	—	—	0.75	—	—	—	1.1	0.75	—	—	1.85	1.5	—	—	2.2	2.2	—	—

		P63	P71	P80	P90	P100	P112
C 12 2		2.8_66.2		2.8_47.6		2.8_47.6	
C 22 2		3.7_63.3 ⛀ (7.1_8.7)		2.7_54.7		2.7_54.7	
C 22 3		60.0_261.0		60.0_261.0		60.0_261.0	
C 32 2		5.0_66.8 ⛀ (7.2_11.2)		2.9_66.8		2.9_66.8	
C 32 3		74.7_274.7		74.7_274.7		74.7_274.7	
C 36 2		4.6_19.0 ⛀ (6.8_10.6)		2.7_19.0		2.7_19.0	
C 36 3		38.1_206.4		22.1_206.4		22.1_206.4	
C 36 4		230.9_848.5		230.9_848.5		230.9_848.5	
C 41 2		14.2_44.8		2.7_44.8		2.7_44.8	
C 41 3		47.0_209.1		28.5_209.1		28.5_209.1	
C 41 4		239.9_855.5		239.9_855.5		239.9_855.5	
C 51 2		18.9_57.0		2.6_57.0		2.6_57.0	
C 51 3		59.0_216.7		21.8_216.7		21.8_216.7	
C 51 4		240.9_884.9		240.9_884.9		240.9_884.9	
C 61 2	i =	22.4_38.0		3.7_38.0 ⛀ (6.7_7.5)		3.7_38.0 ⛀ (6.7_7.5)	
C 61 3		67.7_195.8		26.8_195.8		26.8_195.8	
C 61 4		217.4_796.1		217.4_796.1		217.4_796.1	
C 70 2				14.1_34.7 ⛀ (15.3)		14.1_34.7 ⛀ (15.3)	
C 70 3				41.3_239.3		41.3_239.3	
C 70 4		251.3_1476		251.3_1476		251.3_1476	
C 80 2				20.5_39.1		20.5_39.1	
C 80 3				43.5_215.8		43.5_215.8	
C 80 4		334.3_1481		261.9_1481		261.9_1481	
C 90 2				22.9_35.1		22.9_35.1	
C 90 3				74.4_172.1		74.4_172.1	
C 90 4		339.0_1240		212.4_1240		212.4_1240	
C 100 2						29.6	
C 100 3						79.4_150.4	
C 100 4		380.5_1081		162.1_1081		162.1_1081	

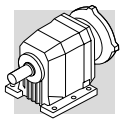

		IEC_ 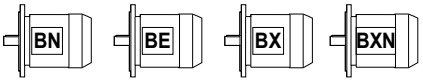 (IM B5)															
		BN	BE	BX	BXN	BN	BE	BX	BN	BE	BX	BN	BX	BX	BX	BX	BY
P_{n1}(#) [kW]	2p	9.2	9.2	—	—	18.5	18.5	—	22	—	—	30	—	—	—	—	—
	4p	9.2	9.2	7.5	7.5	15	15	15	22	22	22	30	30	45	55	90	90
	6p	5.5	4	—	—	11	7.5	—	15	—	—	18.5	—	—	—	—	—
		P132				P160			P180			P200		P225	P250	P280	
C 12 2																	
C 22 2																	
C 22 3																	
C 32 2		2.9_25.1															
C 32 3																	
C 36 2		2.7_19.0															
C 36 3		22.1_77.6															
C 36 4																	
C 41 2		2.7_31.4															
C 41 3		28.5_102.3															
C 41 4																	
C 51 2		2.6_40.4				2.6_40.4			2.6_40.4								
C 51 3		21.8_124.4				21.8_124.4			21.8_124.4								
C 51 4																	
C 61 2	i =	2.8_38.0				2.8_38.0			2.8_38.0								
C 61 3		26.8_140.5				26.8_140.5			26.8_140.5								
C 61 4																	
C 70 2		7.5_34.7 ⛔ (8.0)				4.6_34.7			4.6_34.7			4.6_10.2 ⛔ (9.5)					
C 70 3		41.3_137.4				41.3_137.4			41.3_137.4								
C 70 4		251.3_554.7															
C 80 2		11.1_39.1				7.0_39.1			5.6_39.1			5.6_25.9		5.6_25.9			
C 80 3		43.5_184.4				43.5_184.4			43.5_184.4								
C 80 4		261.9_724.7															
C 90 2		12.8_35.1				10.4_35.1			10.4_35.1			5.2_29.4		5.2_29.4	5.2_29.4		
C 90 3		39.4_172.1				39.4_172.1			39.4_172.1			39.4_96.2		39.4_96.2	39.4_96.2		
C 90 4		212.4_712.2				212.4_712.2			212.4_712.2								
C 100 2		15.2_29.6				12.5_29.6			12.5_29.6			4.9_29.6		4.9_29.6	4.9_29.6	4.9_29.6	
C 100 3		42.9_150.4				34.3_150.4			34.3_150.4			34.3_99.8		34.3_99.8	34.3_99.8	34.3_99.8	
C 100 4		162.1_775.7				162.1_775.7			162.1_775.7								

(#) P_{n1} = maximum installable power on input P_

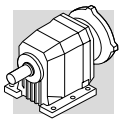

(B 23)

		M	ME	MX	MXN			
		M0	M05 - ME05 - MX05 - MXN05	M1 - ME1 - MX1 - MXN10*	ME2 - MX2 - MXN20*	ME3 - MX3	ME4 - MX4	ME5 - MX5
C 05 2	i =	27.1_44.7	5.5_44.7	5.5_44.7				
C 12 2			2.8_66.2	2.8_37.0	2.8_47.6	2.8_47.6		
C 22 2			3.7_63.3 ⛀ (7.1_8.7)	3.7_43.3 ⛀ (7.1_8.7)	2.7_54.7	2.7_54.7		
C 22 3			60.0_261.0	60.0_261.0	60.0_261.0	60.0_261.0		
C 32 2				5.0_52.4 ⛀ (7.2_11.2)	2.9_66.8	2.9_66.8	2.9_25.1	
C 32 3			74.7_274.7	74.7_274.7	74.7_274.7	74.7_274.7		
C 36 2				4.6_19.0 ⛀ (6.8_10.6)	2.7_19.0	2.7_19.0	2.7_19.0	
C 36 3				38.1_162.0	22.1_206.4	22.1_206.4	22.1_77.6	
C 36 4			230.9_848.5	230.9_848.5	230.9_848.5	230.9_848.5		
C 41 2				14.2_44.8	2.7_44.8	2.7_44.8	2.7_31.4	
C 41 3				47.0_209.1	28.5_209.1	28.5_209.1	28.5_102.3	
C 41 4			239.9_855.5	239.9_855.5	239.9_855.5	239.9_855.5		
C 51 2				18.9_57.0	2.6_57.0	2.6_57.0	2.6_40.4	2.6_40.4
C 51 3				59.0_216.7	21.8_216.7	21.8_216.7	21.8_124.4	21.8_124.4
C 51 4				240.9_884.9	240.9_884.9	240.9_884.9		
C 61 2					3.7_38.0 ⛀ (6.7_7.5)	3.7_38.0 ⛀ (6.7_7.5)	2.8_38.0	2.8_38.0
C 61 3					26.8_195.8	26.8_195.8	26.8_140.5	26.8_140.5
C 61 4				217.4_796.1	217.4_796.1	217.4_796.1		
C 70 2					14.1_34.7 ⛀ (15.3)	14.1_34.7 ⛀ (15.3)	7.5_34.7 ⛀ (8.0)	7.5_34.7 ⛀ (8.0)
C 70 3					41.3_239.3	41.3_239.3	41.3_137.4	41.3_137.4
C 70 4				251.3_1476	251.3_1476	251.3_1476	251.3_554.7	
C 80 2						20.5_39.1	11.1_39.1	11.1_39.1
C 80 3						43.5_215.8	43.5_184.4	43.5_184.4
C 80 4				334.3_1481	261.9_1481	261.9_1481	261.9_724.7	
C 90 2						22.9_35.1	12.8_35.1	12.8_35.1
C 90 3						74.4_172.1	39.4_172.1	39.4_172.1
C 90 4				339.0_1240	212.4_1240	212.4_1240	212.4_712.2	
C 100 2							15.2_29.6	15.2_29.6
C 100 3							42.9_150.4	42.9_150.4
C 100 4				380.5_1081	162.1_1081	162.1_1081	162.1_775.7	

* Gearbox C 05 2 is not available in combination with MXN 10 and MXN 20 but only with MXN 05

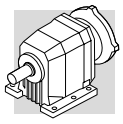

Motor adapters matching the most popular brands of servomotors are available for units size C12… C61. Dimensions of servomotor inputs are provided within the drawing section for each frame size. The code **SK** applies for inputs featuring a conventional keyway, while through the specification of the **SC** code the input shaft will feature a clamping device instead.

(B 24)

		SERVO INPUT							
		SK60A	SK60B	SK80A	SK80B	SK80C	SK95A	SK95B	SK95C
		SC60A	SC60B	SC80A	SC80B	SC80C	SC95A	SC95B	SC95C
C 12 2	i =	2.8_66.2	2.8_66.2	2.8_66.2		2.8_47.6	2.8_66.2	2.8_47.6	2.8_47.6
C 22 2		3.7_63.3 ⛀ (7.1_8.7)	3.7_63.3 ⛀ (7.1_8.7)	3.7_63.3 ⛀ (7.1_8.7)		2.7_54.7	3.7_63.3 ⛀ (7.1_8.7)	2.7_54.7	2.7_54.7
C 22 3		60.0_261.0	60.0_261.0	60.0_261.0		60.0_261.0	60.0_261.0	60.0_261.0	60.0_261.0
C 32 2		5.0_66.8 ⛀ (7.2_11.2)	5.0_66.8 ⛀ (7.2_11.2)	5.0_66.8 ⛀ (7.2_11.2)		2.9_66.8	5.0_66.8 ⛀ (7.2_11.2)	2.9_66.8	2.9_66.8
C 32 3		74.7_274.7	74.7_274.7	74.7_274.7		74.7_274.7	74.7_274.7	74.7_274.7	74.7_274.7
C 36 2		4.6_19.0 ⛀ (6.8_10.6)	4.6_19.0 ⛀ (6.8_10.6)	4.6_19.0 ⛀ (6.8_10.6)		2.7_19.0	4.6_19.0 ⛀ (6.8_10.6)	2.7_19.0	2.7_19.0
C 36 3		38.1_206.4	38.1_206.4	38.1_206.4		22.1_206.4	38.1_206.4	22.1_206.4	22.1_206.4
C 36 4		230.9_848.5	230.9_848.5	230.9_848.5		230.9_848.5	230.9_848.5	230.9_848.5	230.9_848.5
C 41 2					6.0_44.8 ⛀ (6.4_12.4)	2.7_44.8	6.0_44.8 ⛀ (6.4_12.4)	2.7_44.8	2.7_44.8
C 41 3					47.0_209.1	28.5_209.1	47.0_209.1	28.5_209.1	28.5_209.1
C 41 4		239.9_855.5	239.9_855.5	239.9_855.5		239.9_855.5	239.9_855.5	239.9_855.5	239.9_855.5
C 51 2					18.9_57.0	2.6_57.0	18.9_57.0	2.6_57.0	2.6_57.0
C 51 3					59.0_216.7	21.8_216.7	59.0_216.7	21.8_216.7	21.8_216.7
C 51 4						240.9_884.9	240.9_884.9	240.9_884.9	240.9_884.9
C 61 2						3.7_38.0 ⛀ (6.7_7.5)	22.4_38.0	3.7_38.0 ⛀ (6.7_7.5)	3.7_38.0 ⛀ (6.7_7.5)
C 61 3						26.8_195.8	67.7_195.8	26.8_195.8	26.8_195.8
C 61 4					217.4_796.1	217.4_796.1	217.4_796.1	217.4_796.1	217.4_796.1

(B 25)

		SK110A	SK110B	SK130A	SK130B	SK180A	SK180B
		SC110A	SC110B	SC130A	SC130B	SC180A	SC180B
C 12 2	i =	2.8_47.6	2.8_47.6				
C 22 2		2.7_54.7	2.7_54.7				
C 22 3		60.0_261.0	60.0_261.0				
C 32 2		2.9_66.8	2.9_66.8	2.9_66.8			
C 32 3		74.7_274.7	74.7_274.7				
C 36 2		2.7_19.0	2.7_19.0	2.7_19.0			
C 36 3		22.1_206.4	22.1_206.4	22.1_206.4			
C 36 4		230.9_848.5	230.9_848.5				
C 41 2		2.7_44.8	2.7_44.8	2.7_44.8	2.7_31.4	2.7_31.4	2.7_31.4
C 41 3		28.5_209.1	28.5_209.1	28.5_209.1	28.5_102.3	28.5_102.3	28.5_102.3
C 41 4		239.9_855.5	239.9_855.5				
C 51 2		2.6_57.0	2.6_57.0	2.6_57.0	2.6_40.4	2.6_40.4	2.6_40.4
C 51 3		21.8_216.7	21.8_216.7	21.8_216.7	21.8_124.4	21.8_124.4	21.8_124.4
C 51 4		240.9_884.9	240.9_884.9	240.9_884.9			
C 61 2		3.7_38.0 ⛀ (6.7_7.5)	3.7_38.0 ⛀ (6.7_7.5)	3.7_38.0 ⛀ (6.7_7.5)	2.8_38.0	2.8_38.0	2.8_38.0
C 61 3		26.8_195.8	26.8_195.8	26.8_195.8	26.8_140.5	26.8_140.5	26.8_140.5
C 61 4		217.4_796.1	217.4_796.1	217.4_796.1			

28 MOMENT OF INERTIA

The following charts indicate moment of inertia values Jr [kgm^2] referred to the gear unit high speed shaft. A key to the symbols used follows:



Values under this icon refer to compact gear units, without motor. To obtain the overall moment of inertia for the gearmotor just add the value of the inertia for the specific compact motor, given in the relevant rating chart.

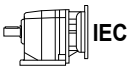

Values under this symbol refer to gearboxes with IEC motor adaptor (IEC size...).

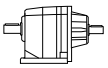

This symbol refers to gearbox values.



Values under this symbol refer to gear unit with servomotor input adapter.

C 05

	i	**J** (•10^{-4}) [kgm^2] 
C 05_5.5	5.5	0.29
C 05_6.7	6.7	0.29
C 05_7.4	7.4	0.28
C 05_9.3	9.3	0.17
C 05_11.2	11.2	0.16
C 05_12.5	12.5	0.16
C 05_15.6	15.6	0.09
C 05_18.9	18.9	0.09
C 05_21.0	21.0	0.08
C 05_27.1	27.1	0.04
C 05_32.8	32.8	0.04
C 05_36.4	36.4	0.04
C 05_40.3	40.3	0.03
C 05_44.7	44.7	0.03

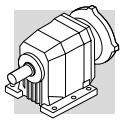

C 12

	i	J (•10-4) [kgm2]							
			IEC						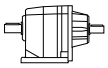
			63	71	80	90	100	112	
C 12 2_2.8	2.8	0.44	1.9	1.9	3.3	3.2	4.5	4.5	1.3
C 12 2_3.2	3.2	0.34	1.8	1.8	3.2	3.1	4.4	4.4	1.2
C 12 2_3.7	3.7	0.29	1.8	1.7	3.1	3.1	4.4	4.4	1.2
C 12 2_4.3	4.3	0.21	1.7	1.7	3.1	3.0	4.3	4.3	1.1
C 12 2_4.9	4.9	0.19	1.7	1.7	3.0	3.0	4.3	4.3	1.1
C 12 2_5.6	5.6	0.15	1.6	1.6	3.0	2.9	4.2	4.2	1.0
C 12 2_6.2	6.2	0.12	1.6	1.6	3.0	2.9	4.2	4.2	1.0
C 12 2_7.6	7.6	0.33	1.8	1.8	3.2	3.1	4.4	4.4	1.2
C 12 2_8.8	8.8	0.32	1.8	1.8	3.2	3.1	4.4	4.4	1.2
C 12 2_10.1	10.1	0.23	1.7	1.7	3.1	3.0	4.3	4.3	1.1
C 12 2_11.9	11.9	0.17	1.6	1.6	3.0	3.0	4.2	4.2	1.1
C 12 2_13.4	13.4	0.16	1.6	1.6	3.0	2.9	4.2	4.2	1.1
C 12 2_15.4	15.4	0.12	1.6	1.6	3.0	2.9	4.2	4.2	1.0
C 12 2_17.2	17.2	0.10	1.6	1.6	2.9	2.9	4.2	4.2	1.0
C 12 2_18.4	18.4	0.08	1.6	1.5	2.9	2.9	4.2	4.2	0.98
C 12 2_20.6	20.6	0.08	1.5	1.5	2.9	2.9	4.2	4.2	0.98
C 12 2_23.2	23.2	0.07	1.5	1.5	2.9	2.9	4.1	4.1	0.97
C 12 2_25.4	25.4	0.06	1.5	1.5	2.9	2.8	4.1	4.1	0.96
C 12 2_29.5	29.5	0.05	1.5	1.5	2.9	2.8	4.1	4.1	0.95
C 12 2_32.8	32.8	0.04	1.5	1.5	2.9	2.8	4.1	4.1	0.94
C 12 2_37.0	37.0	0.03	1.5	1.5	2.9	2.8	4.1	4.1	0.93
C 12 2_42.3	42.3	0.03	1.5	1.5	2.9	2.8	4.1	4.1	0.93
C 12 2_47.6	47.6	0.02	1.5	1.5	2.9	2.8	4.1	4.1	0.92
C 12 2_55.2	55.2	0.02	1.5	1.5	—	—	—	—	0.92
C 12 2_66.2	66.2	0.01	1.5	1.5	—	—	—	—	0.91

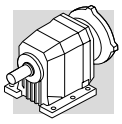

C 12

	i	J (•10-4) [kgm2]									
		SERVO									
		60A		60B 80A		95A		80C 95B 110A		95C 110B	
		SK	SC	SK	SC	SK	SC	SK	SC	SK	SC
C 12 2_2.8	2.8	0.71	0.97	0.73	1.2	3.3	3.7	3.3	3.8	3.2	4.2
C 12 2_3.2	3.2	0.61	0.87	0.63	1.1	3.2	3.6	3.2	3.7	3.1	4.1
C 12 2_3.7	3.7	0.56	0.82	0.58	1.0	3.1	3.5	3.1	3.6	3.1	4.1
C 12 2_4.3	4.3	0.48	0.74	0.50	0.94	3.0	3.5	3.1	3.6	3.0	4.0
C 12 2_4.9	4.9	0.46	0.72	0.48	0.92	3.0	3.4	3.0	3.5	3.0	4.0
C 12 2_5.6	5.6	0.42	0.68	0.44	0.88	3.0	3.4	3.0	3.5	2.9	3.9
C 12 2_6.2	6.2	0.39	0.65	0.41	0.85	2.9	3.4	3.0	3.5	2.9	3.9
C 12 2_7.6	7.6	0.60	0.86	0.62	1.1	3.2	3.6	3.2	3.7	3.1	4.1
C 12 2_8.8	8.8	0.59	0.85	0.61	1.0	3.1	3.6	3.2	3.7	3.1	4.1
C 12 2_10.1	10.1	0.50	0.76	0.52	0.96	3.1	3.5	3.1	3.6	3.0	4.0
C 12 2_11.9	11.9	0.44	0.70	0.46	0.90	3.0	3.4	3.0	3.5	3.0	4.0
C 12 2_13.4	13.4	0.43	0.69	0.45	0.83	3.0	3.4	3.0	3.5	2.9	3.9
C 12 2_15.4	15.4	0.39	0.65	0.41	0.85	2.9	3.4	3.0	3.5	2.9	3.9
C 12 2_17.2	17.2	0.37	0.63	0.39	0.83	2.9	3.4	2.9	3.4	2.9	3.9
C 12 2_18.4	18.4	0.35	0.61	0.37	0.81	2.9	3.3	2.9	3.4	2.9	3.9
C 12 2_20.6	20.6	0.35	0.61	0.37	0.81	2.9	3.3	2.9	3.4	2.9	3.9
C 12 2_23.2	23.2	0.34	0.60	0.36	0.80	2.9	3.3	2.9	3.4	2.9	3.9
C 12 2_25.4	25.4	0.33	0.59	0.35	0.79	2.9	3.3	2.9	3.4	2.8	3.8
C 12 2_29.5	29.5	0.32	0.58	0.34	0.78	2.9	3.3	2.9	3.4	2.8	3.8
C 12 2_32.8	32.8	0.34	0.60	0.33	0.77	2.9	3.3	2.9	3.4	2.8	3.8
C 12 2_37.0	37.0	0.30	0.56	0.32	0.76	2.9	3.3	2.9	3.4	2.8	3.8
C 12 2_42.3	42.3	0.30	0.56	0.32	0.76	2.9	3.3	2.9	3.4	2.8	3.8
C 12 2_47.6	47.6	0.29	0.55	0.31	0.75	2.8	3.3	2.9	3.4	2.8	3.8
C 12 2_55.2	55.2	0.29	0.55	0.31	0.75	2.8	3.3	—	—	—	—
C 12 2_66.2	66.2	0.28	0.54	0.30	0.74	2.8	3.3	—	—	—	—

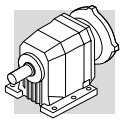

C 22

	i	J (•10-4) [kgm2]							
			IEC						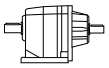
			63	71	80	90	100	112	
C 22 2_2.7	2.7	1.2	—	—	4.0	4.0	5.3	5.3	3.1
C 22 2_3.3	3.3	0.83	—	—	3.7	3.6	4.9	4.9	2.7
C 22 2_3.7	3.7	0.72	2.2	2.2	3.6	3.5	4.8	4.8	2.6
C 22 2_4.3	4.3	0.56	2.0	2.0	3.4	3.3	4.6	4.6	2.4
C 22 2_4.8	4.8	0.48	2.0	1.9	3.3	3.3	4.6	4.6	2.4
C 22 2_5.6	5.6	0.36	1.8	1.8	3.2	3.2	4.4	4.4	2.2
C 22 2_6.1	6.1	0.29	1.8	1.7	3.1	3.1	4.4	4.4	2.2
C 22 2_7.1	7.1	0.77	—	—	3.6	3.6	4.8	4.8	2.6
C 22 2_8.7	8.7	0.55	—	—	3.4	3.3	4.6	4.6	2.4
C 22 2_9.6	9.6	0.50	2.0	2.0	3.3	3.3	4.6	4.6	2.4
C 22 2_11.1	11.1	0.39	1.9	1.8	3.2	3.2	4.5	4.5	2.3
C 22 2_12.4	12.4	0.35	1.8	1.8	3.2	3.1	4.4	4.4	2.2
C 22 2_14.5	14.5	0.36	1.7	1.7	3.1	3.1	4.3	4.3	2.1
C 22 2_15.8	15.8	0.20	1.7	1.7	3.1	3.0	4.3	4.3	2.1
C 22 2_18.1	18.1	0.18	1.6	1.6	3.0	3.0	4.3	4.3	2.0
C 22 2_20.0	20.0	0.15	1.6	1.6	3.0	2.9	4.2	4.2	2.0
C 22 2_21.5	21.5	0.13	1.6	1.6	3.0	2.9	4.2	4.2	2.0
C 22 2_24.3	24.3	0.12	1.6	1.6	3.0	2.9	4.2	4.2	2.0
C 22 2_27.2	27.2	0.10	1.6	1.6	3.0	2.9	4.2	4.2	2.0
C 22 2_29.6	29.6	0.09	1.6	1.5	2.9	2.9	4.2	4.2	2.0
C 22 2_33.1	33.1	0.07	1.5	1.5	2.9	2.9	4.2	4.2	1.9
C 22 2_36.8	36.8	0.06	1.5	1.5	2.9	2.8	4.1	4.1	1.9
C 22 2_43.3	43.3	0.05	1.5	1.5	2.9	2.8	4.1	4.1	1.9
C 22 2_48.6	48.6	0.04	1.5	1.5	2.9	2.8	4.1	4.1	1.9
C 22 2_54.7	54.7	0.03	1.5	1.5	2.9	2.8	4.1	4.1	1.9
C 22 2_63.3	63.3	0.02	1.5	1.5	—	—	—	—	1.9
C 22 3_60.0	60.0	0.04	1.5	1.5	2.9	2.8	4.1	4.1	0.94
C 22 3_65.3	65.3	0.03	1.5	1.5	2.9	2.8	4.1	4.1	0.93
C 22 3_74.8	74.8	0.03	1.5	1.5	2.9	2.8	4.1	4.1	0.93
C 22 3_82.6	82.6	0.03	1.5	1.5	2.9	2.8	4.1	4.1	0.93
C 22 3_88.5	88.5	0.03	1.5	1.5	2.9	2.8	4.1	4.1	0.93
C 22 3_100.2	100.2	0.03	1.5	1.5	2.9	2.8	4.1	4.1	0.93
C 22 3_112.0	112.0	0.03	1.5	1.5	2.9	2.8	4.1	4.1	0.93
C 22 3_122.2	122.2	0.03	1.5	1.5	2.9	2.8	4.1	4.1	0.93
C 22 3_136.5	136.5	0.02	1.5	1.5	2.9	2.8	4.1	4.1	0.92
C 22 3_151.7	151.7	0.02	1.5	1.5	2.9	2.8	4.1	4.1	0.92
C 22 3_178.5	178.5	0.02	1.5	1.5	2.9	2.8	4.1	4.1	0.92
C 22 3_200.7	200.7	0.02	1.5	1.5	2.9	2.8	4.1	4.1	0.92
C 22 3_225.8	225.8	0.02	1.5	1.5	2.9	2.8	4.1	4.1	0.92
C 22 3_261.0	261.0	0.02	1.5	1.5	2.9	2.8	4.1	4.1	0.92

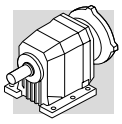

C 22

	i	J (•10-4) [kgm2]									
		SERVO									
		60A		60B 80A		95A		80C 95B 110A		95C 110B	
		SK	SC	SK	SC	SK	SC	SK	SC	SK	SC
C 22 2_2.7	2.7	—	—	—	—	—	—	4.0	4.5	4.0	5.0
C 22 2_3.3	3.3	—	—	—	—	—	—	3.7	4.2	3.6	4.6
C 22 2_3.7	3.7	0.99	1.3	1.0	1.4	3.5	4.0	3.6	4.1	3.5	4.5
C 22 2_4.3	4.3	0.83	1.1	0.85	1.3	3.4	3.8	3.4	3.9	3.3	4.3
C 22 2_4.8	4.8	0.75	1.0	0.77	1.2	3.3	3.7	3.3	3.8	3.3	4.3
C 22 2_5.6	5.6	0.63	0.89	0.65	1.1	3.2	3.6	3.2	3.7	3.2	4.2
C 22 2_6.1	6.1	0.56	0.82	0.58	1.0	3.1	3.5	3.1	3.6	3.1	4.1
C 22 2_7.1	7.1	—	—	—	—	—	—	3.6	4.1	3.6	4.6
C 22 2_8.7	8.7	—	—	—	—	—	—	3.4	3.9	3.3	4.3
C 22 2_9.6	9.6	0.77	1.0	0.79	1.2	3.3	3.8	3.3	3.8	3.3	4.3
C 22 2_11.1	11.1	0.66	0.92	0.68	1.1	3.2	3.6	3.2	3.7	3.2	4.2
C 22 2_12.4	12.4	0.62	0.88	0.64	1.1	3.2	3.6	3.2	3.7	3.1	4.1
C 22 2_14.5	14.5	0.63	0.89	0.65	1.1	3.2	3.6	3.1	3.6	3.1	4.1
C 22 2_15.8	15.8	0.47	0.73	0.49	0.93	3.0	3.5	3.1	3.6	3.0	4.0
C 22 2_18.1	18.1	0.45	0.71	0.47	0.91	3.0	3.4	3.0	3.5	3.0	4.0
C 22 2_20.0	20.0	0.42	0.68	0.44	0.88	3.0	3.4	3.0	3.5	2.9	3.9
C 22 2_21.5	21.5	0.40	0.66	0.42	0.86	3.0	3.4	3.0	3.5	2.9	3.9
C 22 2_24.3	24.3	0.39	0.65	0.41	0.85	2.9	3.4	3.0	3.5	2.9	3.9
C 22 2_27.2	27.2	0.37	0.63	0.39	0.83	2.9	3.4	3.0	3.5	2.9	3.9
C 22 2_29.6	29.6	0.36	0.62	0.38	0.82	2.9	3.3	2.9	3.4	2.9	3.9
C 22 2_33.1	33.1	0.34	0.60	0.36	0.80	2.9	3.3	2.9	3.4	2.9	3.9
C 22 2_36.8	36.8	0.33	0.59	0.35	0.79	2.9	3.3	2.9	3.4	2.8	3.8
C 22 2_43.3	43.3	0.32	0.58	0.34	0.78	2.9	3.3	2.9	3.4	2.8	3.8
C 22 2_48.6	48.6	0.31	0.57	0.33	0.77	2.9	3.3	2.9	3.4	2.8	3.8
C 22 2_54.7	54.7	0.30	0.56	0.32	0.76	2.9	3.3	2.9	3.4	2.8	3.8
C 22 2_63.3	63.3	0.29	0.55	0.31	0.75	2.8	3.3	—	—	—	—
C 22 3_60.0	60.0	0.31	0.57	0.33	0.77	2.9	3.3	2.9	3.4	2.8	3.8
C 22 3_65.3	65.3	0.30	0.56	0.32	0.76	2.9	3.3	2.9	3.4	2.8	3.8
C 22 3_74.8	74.8	0.30	0.56	0.32	0.76	2.9	3.3	2.9	3.4	2.8	3.8
C 22 3_82.6	82.6	0.30	0.56	0.32	0.76	2.9	3.3	2.9	3.4	2.8	3.8
C 22 3_88.5	88.5	0.30	0.56	0.32	0.76	2.9	3.3	2.9	3.4	2.8	3.8
C 22 3_100.2	100.2	0.30	0.56	0.32	0.76	2.9	3.3	2.9	3.4	2.8	3.8
C 22 3_112.0	112.0	0.30	0.56	0.32	0.76	2.9	3.3	2.9	3.4	2.8	3.8
C 22 3_122.2	122.2	0.30	0.56	0.32	0.76	2.9	3.3	2.9	3.4	2.8	3.8
C 22 3_136.5	136.5	0.29	0.55	0.31	0.75	2.8	3.3	2.9	3.4	2.8	3.8
C 22 3_151.7	151.7	0.29	0.55	0.31	0.75	2.8	3.3	2.9	3.4	2.8	3.8
C 22 3_178.5	178.5	0.29	0.55	0.31	0.75	2.8	3.3	2.9	3.4	2.8	3.8
C 22 3_200.7	200.7	0.29	0.55	0.31	0.75	2.8	3.3	2.9	3.4	2.8	3.8
C 22 3_225.8	225.8	0.29	0.55	0.31	0.75	2.8	3.3	2.9	3.4	2.8	3.8
C 22 3_261.0	261.0	0.29	0.55	0.31	0.75	2.8	3.3	2.9	3.4	2.8	3.8

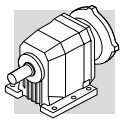

C 32

	i	J (•10-4) [kgm2]								
			IEC							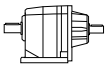
			63	71	80	90	100	112	132	
C 32 2_2.9	2.9	2.3	—	—	5.2	5.1	6.4	6.4	20	4.6
C 32 2_3.4	3.4	1.8	—	—	4.6	4.6	5.9	5.9	20	4.0
C 32 2_3.7	3.7	1.6	—	—	4.4	4.3	5.6	5.6	20	3.8
C 32 2_4.5	4.5	1.2	—	—	4.0	4.0	5.2	5.2	19	3.4
C 32 2_5.0	5.0	0.87	2.3	2.3	3.7	3.7	5.0	5.0	19	3.1
C 32 2_5.7	5.7	0.82	2.3	2.3	3.7	3.6	4.9	4.9	19	3.0
C 32 2_6.3	6.3	0.63	2.1	2.1	3.5	3.4	4.7	4.7	18	2.8
C 32 2_7.2	7.2	1.5	—	—	4.4	4.3	5.6	5.6	19	3.7
C 32 2_8.5	8.5	1.2	—	—	4.1	4.0	5.3	5.3	19	3.4
C 32 2_9.3	9.3	1.1	—	—	3.9	3.9	5.1	5.1	19	3.3
C 32 2_11.2	11.2	0.83	—	—	3.7	3.6	4.9	4.9	19	3.0
C 32 2_12.3	12.3	0.60	2.1	2.1	3.4	3.4	4.7	4.7	18	2.8
C 32 2_14.1	14.1	0.61	2.1	2.1	3.5	3.4	4.7	4.7	18	2.8
C 32 2_15.6	15.6	0.46	1.9	1.9	3.3	3.2	4.5	4.5	18	2.7
C 32 2_18.2	18.2	0.42	1.9	1.9	3.3	3.2	4.5	4.5	18	2.6
C 32 2_20.1	20.1	0.34	1.8	1.8	3.2	3.1	4.4	4.4	18	2.6
C 32 2_22.9	22.9	0.31	1.8	1.8	3.2	3.1	4.4	4.4	17	2.5
C 32 2_25.1	25.1	0.25	1.7	1.7	3.1	3.0	4.3	4.3	17	2.5
C 32 2_26.9	26.9	0.24	1.7	1.7	3.1	3.0	4.3	4.3	—	2.5
C 32 2_29.8	29.8	0.19	1.7	1.7	3.0	3.0	4.3	4.3	—	2.4
C 32 2_33.1	33.1	0.19	1.7	1.7	3.0	3.0	4.3	4.3	—	2.4
C 32 2_36.1	36.1	0.14	1.6	1.6	3.0	2.9	4.2	4.2	—	2.4
C 32 2_40.7	40.7	0.14	1.6	1.6	3.0	2.9	4.2	4.2	—	2.4
C 32 2_45.3	45.3	0.10	1.6	1.6	3.0	2.9	4.2	4.2	—	2.3
C 32 2_52.4	52.4	0.08	1.6	1.6	2.9	2.9	4.2	4.2	—	2.3
C 32 2_59.4	59.4	0.07	1.5	1.5	2.9	2.9	4.2	4.2	—	2.3
C 32 2_66.8	66.8	0.05	1.5	1.5	2.9	2.8	4.1	4.1	—	2.3
C 32 3_74.7	74.7	0.06	1.5	1.5	2.9	2.9	4.1	4.1	—	0.96
C 32 3_82.6	82.6	0.06	1.5	1.5	2.9	2.8	4.1	4.1	—	0.96
C 32 3_94.2	94.2	0.06	1.5	1.5	2.9	2.8	4.1	4.1	—	0.96
C 32 3_103.3	103.3	0.05	1.5	1.5	2.9	2.8	4.1	4.1	—	0.95
C 32 3_110.6	110.6	0.05	1.5	1.5	2.9	2.8	4.1	4.1	—	0.95
C 32 3_122.4	122.4	0.05	1.5	1.5	2.9	2.8	4.1	4.1	—	0.95
C 32 3_136.0	136.0	0.05	1.5	1.5	2.9	2.8	4.1	4.1	—	0.95
C 32 3_148.4	148.4	0.05	1.5	1.5	2.9	2.8	4.1	4.1	—	0.95
C 32 3_167.4	167.4	0.05	1.5	1.5	2.9	2.8	4.1	4.1	—	0.95
C 32 3_186.0	186.0	0.04	1.5	1.5	2.9	2.8	4.1	4.1	—	0.94
C 32 3_215.6	215.6	0.04	1.5	1.5	2.9	2.8	4.1	4.1	—	0.94
C 32 3_244.2	244.2	0.04	1.5	1.5	2.9	2.8	4.1	4.1	—	0.94
C 32 3_274.7	274.7	0.04	1.5	1.5	2.9	2.8	4.1	4.1	—	0.94

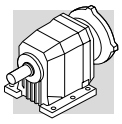

C 32

	i	J (•10-4) [kgm2]											
		SERVO											
		60A		60B 80A		95A		80C 95B 110A		95C 110B		130A	
		SK	SC	SK	SC	SK	SC	SK	SC	SK	SC	SK	SC
C 32 2_2.9	2.9	—	—	—	—	—	—	5.2	5.7	5.1	6.1	5.1	6.1
C 32 2_3.4	3.4	—	—	—	—	—	—	4.6	5.1	4.6	5.6	4.6	5.6
C 32 2_3.7	3.7	—	—	—	—	—	—	4.4	4.9	4.3	5.3	4.3	5.3
C 32 2_4.5	4.5	—	—	—	—	—	—	4.0	4.5	4.0	5.0	4.0	5.0
C 32 2_5.0	5.0	1.1	1.4	1.2	1.6	3.7	4.1	3.7	4.2	3.7	4.7	3.7	4.7
C 32 2_5.7	5.7	1.1	1.4	1.1	1.5	3.6	4.1	3.7	4.2	3.6	4.6	3.6	4.6
C 32 2_6.3	6.3	0.90	1.2	0.92	1.4	3.5	3.9	3.5	4.0	3.4	4.4	3.4	4.4
C 32 2_7.2	7.2	—	—	—	—	—	—	4.4	4.9	4.3	5.3	4.3	5.3
C 32 2_8.5	8.5	—	—	—	—	—	—	4.1	4.6	4.0	5.0	4.0	5.0
C 32 2_9.3	9.3	—	—	—	—	—	—	3.9	4.4	3.9	4.9	3.9	4.9
C 32 2_11.2	11.2	—	—	—	—	—	—	3.7	4.2	3.6	4.6	3.6	4.6
C 32 2_12.3	12.3	0.87	1.1	0.89	1.3	3.4	3.9	3.4	3.9	3.4	4.4	3.4	4.4
C 32 2_14.1	14.1	0.88	1.1	0.90	1.3	3.4	3.9	3.5	4.0	3.4	4.4	3.4	4.4
C 32 2_15.6	15.6	0.73	0.99	0.75	1.2	3.3	3.7	3.3	3.8	3.2	4.2	3.2	4.2
C 32 2_18.2	18.2	0.69	0.95	0.71	1.1	3.2	3.7	3.3	3.8	3.2	4.2	3.2	4.2
C 32 2_20.1	20.1	0.61	0.87	0.63	1.1	3.2	3.6	3.2	3.7	3.1	4.1	3.1	4.1
C 32 2_22.9	22.9	0.58	0.84	0.60	1.0	3.1	3.6	3.2	3.7	3.1	4.1	3.1	4.1
C 32 2_25.1	25.1	0.52	0.78	0.54	0.98	3.1	3.5	3.1	3.6	3.0	4.0	3.0	4.0
C 32 2_26.9	26.9	0.51	0.77	0.53	0.97	3.1	3.5	3.1	3.6	3.0	4.0	3.0	4.0
C 32 2_29.8	29.8	0.46	0.72	0.48	0.92	3.0	3.4	3.0	3.5	3.0	4.0	3.0	4.0
C 32 2_33.1	33.1	0.46	0.72	0.48	0.92	3.0	3.4	3.0	3.5	3.0	4.0	3.0	4.0
C 32 2_36.1	36.1	0.41	0.67	0.43	0.87	3.0	3.4	3.0	3.5	2.9	3.9	2.9	3.9
C 32 2_40.7	40.7	0.41	0.67	0.43	0.87	3.0	3.4	3.0	3.5	2.9	3.9	2.9	3.9
C 32 2_45.3	45.3	0.37	0.63	0.39	0.83	2.9	3.4	3.0	3.5	2.9	3.9	2.9	3.9
C 32 2_52.4	52.4	0.35	0.61	0.37	0.81	2.9	3.3	2.9	3.4	2.9	3.9	2.9	3.9
C 32 2_59.4	59.4	0.34	0.60	0.36	0.80	2.9	3.3	2.9	3.4	2.9	3.9	2.9	3.9
C 32 2_66.8	66.8	0.32	0.58	0.34	0.78	2.9	3.3	2.9	3.4	2.8	3.8	2.8	3.8
C 32 3_74.7	74.7	0.33	0.59	0.35	0.79	2.9	3.3	2.9	3.4	2.9	3.9	—	—
C 32 3_82.6	82.6	0.33	0.59	0.35	0.79	2.9	3.3	2.9	3.4	2.8	3.8	—	—
C 32 3_94.2	94.2	0.33	0.59	0.35	0.79	2.9	3.3	2.9	3.4	2.8	3.8	—	—
C 32 3_103.3	103.3	0.32	0.58	0.34	0.78	2.9	3.3	2.9	3.4	2.8	3.8	—	—
C 32 3_110.6	110.6	0.32	0.58	0.34	0.78	2.9	3.3	2.9	3.4	2.8	3.8	—	—
C 32 3_122.4	122.4	0.32	0.58	0.34	0.78	2.9	3.3	2.9	3.4	2.8	3.8	—	—
C 32 3_136.0	136.0	0.32	0.58	0.34	0.78	2.9	3.3	2.9	3.4	2.8	3.8	—	—
C 32 3_148.4	148.4	0.32	0.58	0.34	0.78	2.9	3.3	2.9	3.4	2.8	3.8	—	—
C 32 3_167.4	167.4	0.32	0.58	0.34	0.78	2.9	3.3	2.9	3.4	2.8	3.8	—	—
C 32 3_186.0	186.0	0.31	0.57	0.33	0.77	2.9	3.3	2.9	3.4	2.8	3.8	—	—
C 32 3_215.6	215.6	0.31	0.57	0.33	0.77	2.9	3.3	2.9	3.4	2.8	3.8	—	—
C 32 3_244.2	244.2	0.31	0.57	0.33	0.77	2.9	3.3	2.9	3.4	2.8	3.8	—	—
C 32 3_274.7	274.7	0.31	0.57	0.33	0.77	2.9	3.3	2.9	3.4	2.8	3.8	—	—

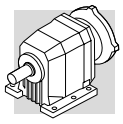

C 36

	i	J (•10-4) [kgm2]								
			IEC							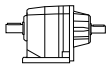
			63	71	80	90	100	112	132	
C 36 2_2.7	2.7	3.6	—	—	6.5	6.4	7.7	7.7	22	14
C 36 2_3.2	3.2	2.5	—	—	5.4	5.3	6.6	6.6	21	13
C 36 2_3.5	3.5	2.4	—	—	5.3	5.2	6.5	6.5	20	13
C 36 2_4.2	4.2	1.6	—	—	4.5	4.4	5.7	5.7	20	12
C 36 2_4.6	4.6	1.5	3.0	3.0	4.4	4.3	5.6	5.6	19	12
C 36 2_5.3	5.3	1.1	2.6	2.6	4.0	3.9	5.2	5.2	19	12
C 36 2_5.8	5.8	0.98	2.5	2.5	3.9	3.8	5.1	5.1	19	12
C 36 2_6.8	6.8	2.2	—	—	5.1	5.0	6.3	6.3	20	13
C 36 2_8.0	8.0	1.6	—	—	4.4	4.3	5.6	5.6	20	12
C 36 2_8.8	8.8	1.5	—	—	4.4	4.3	5.6	5.6	19	12
C 36 2_10.6	10.6	1.1	—	—	3.9	3.8	5.1	5.1	19	12
C 36 2_11.7	11.7	1.0	2.5	2.5	3.9	3.8	5.1	5.1	19	12
C 36 2_13.3	13.3	0.69	2.2	2.2	3.6	3.5	4.8	4.8	19	11
C 36 2_14.8	14.8	0.68	2.2	2.2	3.6	3.5	4.8	4.8	19	11
C 36 2_17.2	17.2	0.47	2.0	2.0	3.4	3.3	4.6	4.6	18	11
C 36 2_19.0	19.0	0.47	2.0	2.0	3.4	3.3	4.6	4.6	18	11
C 36 3_22.1	22.1	1.8	—	—	4.7	4.6	5.9	5.9	19	12
C 36 3_26.2	26.2	1.3	—	—	4.2	4.1	5.4	5.4	19	12
C 36 3_28.7	28.7	1.3	—	—	4.2	4.1	5.4	5.4	19	12
C 36 3_34.6	34.6	0.88	—	—	3.8	3.7	5.0	5.0	19	11
C 36 3_38.1	38.1	0.90	2.4	2.4	3.8	3.7	5.0	5.0	19	11
C 36 3_43.5	43.5	0.59	2.1	2.1	3.5	3.4	4.7	4.7	19	11
C 36 3_48.2	48.2	0.60	2.1	2.1	3.5	3.4	4.7	4.7	19	11
C 36 3_56.2	56.2	0.41	1.9	1.9	3.3	3.2	4.5	4.5	18	11
C 36 3_62.0	62.0	0.42	1.9	1.9	3.3	3.2	4.5	4.5	18	11
C 36 3_70.8	70.8	0.30	1.8	1.8	3.2	3.1	4.4	4.4	18	11
C 36 3_77.6	77.6	0.28	1.8	1.8	3.2	3.1	4.4	4.4	17	11
C 36 3_83.1	83.1	0.24	1.7	1.7	3.1	3.0	4.3	4.3	—	11
C 36 3_91.9	91.9	0.21	1.7	1.7	3.1	3.0	4.3	4.3	—	11
C 36 3_102.2	102.2	0.19	1.7	1.7	3.1	3.0	4.3	4.3	—	11
C 36 3_111.5	111.5	0.16	1.7	1.7	3.1	3.0	4.3	4.3	—	11
C 36 3_125.8	125.8	0.14	1.6	1.6	3.0	2.9	4.2	4.2	—	11
C 36 3_139.8	139.8	0.11	1.6	1.6	3.0	2.9	4.2	4.2	—	11
C 36 3_162.0	162.0	0.09	1.6	1.6	3.0	2.9	4.2	4.2	—	11
C 36 3_183.5	183.5	0.07	1.6	1.6	3.0	2.9	4.2	4.2	—	11
C 36 3_206.4	206.4	0.06	1.6	1.6	3.0	2.9	4.2	4.2	—	11
C 36 4_230.9	230.9	0.08	—	—	—	—	—	—	—	—
C 36 4_255.0	255.0	0.08	1.6	1.6	3.0	2.9	4.2	4.2	—	0.90
C 36 4_290.9	290.9	0.07	1.6	1.6	3.0	2.9	4.2	4.2	—	0.89
C 36 4_318.9	318.9	0.07	1.6	1.6	3.0	2.9	4.2	4.2	—	0.89
C 36 4_341.7	341.7	0.07	1.6	1.6	3.0	2.9	4.2	4.2	—	0.89
C 36 4_377.9	377.9	0.07	1.6	1.6	3.0	2.9	4.2	4.2	—	0.89
C 36 4_420.2	420.2	0.06	1.6	1.6	3.0	2.9	4.2	4.2	—	0.88
C 36 4_458.4	458.4	0.06	1.6	1.6	3.0	2.9	4.2	4.2	—	0.88
C 36 4_517.2	517.2	0.06	1.6	1.6	3.0	2.9	4.2	4.2	—	0.88
C 36 4_574.7	574.7	0.06	1.6	1.6	3.0	2.9	4.2	4.2	—	0.88
C 36 4_665.9	665.9	0.06	1.6	1.6	3.0	2.9	4.2	4.2	—	0.88
C 36 4_754.2	754.2	0.06	1.6	1.6	3.0	2.9	4.2	4.2	—	0.88
C 36 4_848.5	848.5	0.06	1.6	1.6	3.0	2.9	4.2	4.2	—	0.88

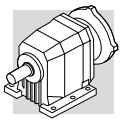

C 36

	i	J (•10-4) [kgm2]											
		SERVO											
		60A		60B 80A		95A		80C 95B 110A		95C 110B		130A	
		SK	SC	SK	SC	SK	SC	SK	SC	SK	SC	SK	SC
C 36 2_2.7	2.7	—	—	—	—	—	—	6.5	7.0	6.4	7.4	6.4	7.4
C 36 2_3.2	3.2	—	—	—	—	—	—	5.4	5.9	5.3	6.3	5.3	6.3
C 36 2_3.5	3.5	—	—	—	—	—	—	5.3	5.8	5.2	6.2	5.2	6.2
C 36 2_4.2	4.2	—	—	—	—	—	—	4.5	5.0	4.4	5.4	4.4	5.4
C 36 2_4.6	4.6	1.8	2.0	1.8	2.2	4.3	4.7	4.4	4.9	4.3	5.3	4.3	5.3
C 36 2_5.3	5.3	1.4	1.6	1.4	1.8	3.9	4.4	4.0	4.5	3.9	4.9	3.9	4.9
C 36 2_5.8	5.8	1.3	1.5	1.3	1.7	3.8	4.2	3.9	4.4	3.8	4.8	3.8	4.8
C 36 2_6.8	6.8	—	—	—	—	—	—	5.1	5.6	5.0	6.0	5.0	6.0
C 36 2_8.0	8.0	—	—	—	—	—	—	4.4	4.9	4.3	5.3	4.3	5.3
C 36 2_8.8	8.8	—	—	—	—	—	—	4.4	4.9	4.3	5.3	4.3	5.3
C 36 2_10.6	10.6	—	—	—	—	—	—	3.9	4.4	3.8	4.8	3.8	4.8
C 36 2_11.7	11.7	1.3	1.5	1.3	1.7	3.8	4.3	3.9	4.4	3.8	4.8	3.8	4.8
C 36 2_13.3	13.3	0.96	1.2	0.98	1.4	3.5	3.9	3.6	4.1	3.5	4.5	3.5	4.5
C 36 2_14.8	14.8	0.95	1.2	0.97	1.4	3.5	3.9	3.6	4.1	3.5	4.5	3.5	4.5
C 36 2_17.2	17.2	0.74	1.0	0.76	1.2	3.3	3.7	3.4	3.9	3.3	4.3	3.3	4.3
C 36 2_19.0	19.0	0.74	1.0	0.76	1.2	3.3	3.7	3.4	3.9	3.3	4.3	3.3	4.3
C 36 3_22.1	22.1	—	—	—	—	—	—	4.7	5.2	4.6	5.6	4.6	5.6
C 36 3_26.2	26.2	—	—	—	—	—	—	4.2	4.7	4.1	5.1	4.1	5.1
C 36 3_28.7	28.7	—	—	—	—	—	—	4.2	4.7	4.1	5.1	4.1	5.1
C 36 3_34.6	34.6	—	—	—	—	—	—	3.8	4.3	3.7	4.7	3.7	4.7
C 36 3_38.1	38.1	1.2	1.4	1.2	1.6	3.7	4.2	3.8	4.3	3.7	4.7	3.7	4.7
C 36 3_43.5	43.5	0.86	1.1	0.88	1.3	3.4	3.8	3.5	4.0	3.4	4.4	3.4	4.4
C 36 3_48.2	48.2	0.87	1.1	0.89	1.3	3.4	3.9	3.5	4.0	3.4	4.4	3.4	4.4
C 36 3_56.2	56.2	0.68	0.94	0.70	1.1	3.2	3.7	3.3	3.8	3.2	4.2	3.2	4.2
C 36 3_62.0	62.0	0.69	0.95	0.71	1.1	3.2	3.7	3.3	3.8	3.2	4.2	3.2	4.2
C 36 3_70.8	70.8	0.57	0.83	0.59	1.0	3.1	3.6	3.2	3.7	3.1	4.1	3.1	4.1
C 36 3_77.6	77.6	0.55	0.81	0.57	1.0	3.1	3.5	3.2	3.7	3.1	4.1	3.1	4.1
C 36 3_83.1	83.1	0.51	0.77	0.53	0.97	3.1	3.5	3.1	3.6	3.0	4.0	3.0	4.0
C 36 3_91.9	91.9	0.48	0.74	0.50	0.94	3.0	3.5	3.1	3.6	3.0	4.0	3.0	4.0
C 36 3_102.2	102.2	0.46	0.72	0.48	0.92	3.0	3.4	3.1	3.6	3.0	4.0	3.0	4.0
C 36 3_111.5	111.5	0.43	0.69	0.45	0.89	3.0	3.4	3.1	3.6	3.0	4.0	3.0	4.0
C 36 3_125.8	125.8	0.41	0.67	0.43	0.87	3.0	3.4	3.0	3.5	2.9	3.9	2.9	3.9
C 36 3_139.8	139.8	0.38	0.64	0.40	0.84	2.9	3.4	3.0	3.5	2.9	3.9	2.9	3.9
C 36 3_162.0	162.0	0.36	0.62	0.38	0.82	2.9	3.3	3.0	3.5	2.9	3.9	2.9	3.9
C 36 3_183.5	183.5	0.34	0.60	0.36	0.80	2.9	3.3	3.0	3.5	2.9	3.9	2.9	3.9
C 36 3_206.4	206.4	0.33	0.59	0.35	0.79	2.9	3.3	3.0	3.5	2.9	3.9	2.9	3.9
C 36 4_230.9	230.9	0.35	0.61	0.37	0.81	2.9	3.3	3.0	3.5	2.9	3.9	—	—
C 36 4_255.0	255.0	0.35	0.61	0.37	0.81	2.9	3.3	3.0	3.5	2.9	3.9	—	—
C 36 4_290.9	290.9	0.34	0.60	0.36	0.80	2.9	3.3	3.0	3.5	2.9	3.9	—	—
C 36 4_318.9	318.9	0.34	0.60	0.36	0.80	2.9	3.3	3.0	3.5	2.9	3.9	—	—
C 36 4_341.7	341.7	0.34	0.60	0.36	0.80	2.9	3.3	3.0	3.5	2.9	3.9	—	—
C 36 4_377.9	377.9	0.34	0.60	0.36	0.80	2.9	3.3	3.0	3.5	2.9	3.9	—	—
C 36 4_420.2	420.2	0.33	0.59	0.35	0.79	2.9	3.3	3.0	3.5	2.9	3.9	—	—
C 36 4_458.4	458.4	0.33	0.59	0.35	0.79	2.9	3.3	3.0	3.5	2.9	3.9	—	—
C 36 4_517.2	517.2	0.33	0.59	0.35	0.79	2.9	3.3	3.0	3.5	2.9	3.9	—	—
C 36 4_574.7	574.7	0.33	0.59	0.35	0.79	2.9	3.3	3.0	3.5	2.9	3.9	—	—
C 36 4_665.9	665.9	0.33	0.59	0.35	0.79	2.9	3.3	3.0	3.5	2.9	3.9	—	—
C 36 4_754.2	754.2	0.33	0.59	0.35	0.79	2.9	3.3	3.0	3.5	2.9	3.9	—	—
C 36 4_848.5	848.5	0.33	0.59	0.35	0.79	2.9	3.3	3.0	3.5	2.9	3.9	—	—

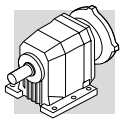

C 41

	i	J (•10-4) [kgm2]								
			IEC							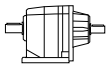
			63	71	80	90	100	112	132	
C 41 2_2.7	2.7	10	—	—	13	13	14	14	29	21
C 41 2_3.6	3.6	6.0	—	—	8.9	8.8	10	10	25	17
C 41 2_4.7	4.7	3.7	—	—	6.6	6.5	7.8	7.8	23	14
C 41 2_6.0	6.0	2.5	—	—	5.4	5.3	6.6	6.6	21	13
C 41 2_6.4	6.4	4.3	—	—	7.2	7.1	8.4	8.4	23	15
C 41 2_7.1	7.1	4.1	—	—	7.0	6.9	8.2	8.2	23	15
C 41 2_8.6	8.6	2.9	—	—	5.8	5.7	7.0	7.0	22	13
C 41 2_9.6	9.6	2.8	—	—	5.7	5.6	6.9	6.9	22	13
C 41 2_11.2	11.2	1.8	—	—	4.7	4.6	5.9	5.9	21	12
C 41 2_12.4	12.4	1.8	—	—	4.7	4.6	5.9	5.9	21	12
C 41 2_14.2	14.2	1.4	2.9	2.9	4.3	4.2	5.5	5.5	20	12
C 41 2_15.8	15.8	1.3	2.8	2.8	4.2	4.1	5.4	5.4	20	12
C 41 2_17.8	17.8	1.0	2.5	2.5	3.9	3.8	5.1	5.1	20	12
C 41 2_19.8	19.8	0.98	2.5	2.5	3.9	3.8	5.1	5.1	20	12
C 41 2_22.6	22.6	0.60	2.1	2.1	3.5	3.4	4.7	4.7	20	11
C 41 2_25.0	25.0	0.60	2.1	2.1	3.5	3.4	4.7	4.7	20	11
C 41 2_28.3	28.3	0.44	1.9	1.9	3.3	3.2	4.5	4.5	19	11
C 41 2_31.4	31.4	0.43	1.9	1.9	3.3	3.2	4.5	4.5	19	11
C 41 2_33.4	33.4	0.34	1.8	1.8	3.2	3.1	4.4	4.4	—	11
C 41 2_37.1	37.1	0.33	1.8	1.8	3.2	3.1	4.4	4.4	—	11
C 41 2_44.8	44.8	0.27	1.8	1.8	3.2	3.1	4.4	4.4	—	11
C 41 3_28.5	28.5	2.5	—	—	5.4	5.3	6.6	6.6	21	13
C 41 3_31.2	31.2	2.5	—	—	5.4	5.3	6.6	6.6	21	13
C 41 3_36.8	36.8	1.6	—	—	4.5	4.4	5.7	5.7	21	12
C 41 3_40.3	40.3	1.6	—	—	4.5	4.4	5.7	5.7	21	12
C 41 3_47.0	47.0	1.2	2.7	2.7	4.1	4.0	5.3	5.3	20	12
C 41 3_51.5	51.5	1.2	2.7	2.7	4.1	4.0	5.3	5.3	20	12
C 41 3_58.7	58.7	0.90	2.4	2.4	3.8	3.7	5.0	5.0	20	11
C 41 3_64.3	64.3	0.90	2.4	2.4	3.8	3.7	5.0	5.0	20	11
C 41 3_74.4	74.4	0.60	2.1	2.1	3.5	3.4	4.7	4.7	20	11
C 41 3_81.5	81.5	0.60	2.1	2.1	3.5	3.4	4.7	4.7	20	11
C 41 3_93.3	93.3	0.40	1.9	1.9	3.3	3.2	4.5	4.5	19	11
C 41 3_102.3	102.3	0.40	1.9	1.9	3.3	3.2	4.5	4.5	19	11
C 41 3_110.1	110.1	0.30	1.8	1.8	3.2	3.1	4.4	4.4	—	11
C 41 3_120.6	120.6	0.30	1.8	1.8	3.2	3.1	4.4	4.4	—	11
C 41 3_132.9	132.9	0.30	1.8	1.8	3.2	3.1	4.4	4.4	—	11
C 41 3_145.6	145.6	0.30	1.8	1.8	3.2	3.1	4.4	4.4	—	11
C 41 3_164.1	164.1	0.20	1.7	1.7	3.1	3.0	4.3	4.3	—	11
C 41 3_179.9	179.9	0.20	1.7	1.7	3.1	3.0	4.3	4.3	—	11
C 41 3_190.8	190.8	0.10	1.6	1.6	3.0	2.9	4.2	4.2	—	11
C 41 3_209.1	209.1	0.10	1.6	1.6	3.0	2.9	4.2	4.2	—	11
C 41 4_239.9	239.9	0.15	1.7	1.7	3.1	3.0	4.3	4.3	—	2.1
C 41 4_263.0	263.0	0.15	1.7	1.7	3.1	3.0	4.3	4.3	—	2.1
C 41 4_304.2	304.2	0.13	1.6	1.6	3.0	2.9	4.2	4.2	—	2.0
C 41 4_333.4	333.4	0.13	1.6	1.6	3.0	2.9	4.2	4.2	—	2.0
C 41 4_381.8	381.8	0.12	1.6	1.6	3.0	2.9	4.2	4.2	—	2.0
C 41 4_418.5	418.5	0.12	1.6	1.6	3.0	2.9	4.2	4.2	—	2.0
C 41 4_450.2	450.2	0.12	1.6	1.6	3.0	2.9	4.2	4.2	—	2.0
C 41 4_493.5	493.5	0.12	1.6	1.6	3.0	2.9	4.2	4.2	—	2.0
C 41 4_543.5	543.5	0.12	1.6	1.6	3.0	2.9	4.2	4.2	—	2.0
C 41 4_595.8	595.8	0.12	1.6	1.6	3.0	2.9	4.2	4.2	—	2.0
C 41 4_671.3	671.3	0.10	1.6	1.6	3.0	2.9	4.2	4.2	—	2.0
C 41 4_735.9	735.9	0.10	1.6	1.6	3.0	2.9	4.2	4.2	—	2.0
C 41 4_780.4	780.4	0.10	1.6	1.6	3.0	2.9	4.2	4.2	—	2.0
C 41 4_855.5	855.5	0.10	1.6	1.6	3.0	2.9	4.2	4.2	—	2.0

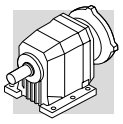

C 41

	i	J (•10-4) [kgm2]																	
		SERVO																	
		60A		60B 80A		80B		95A		80C 95B 110A		95C 110B		130A		130B 180A		180B	
		SK	SC	SK	SC	SK	SC	SK	SC	SK	SC	SK	SC	SK	SC	SK	SC	SK	SC
C 41 2_2.7	2.7	—	—	—	—	—	—	—	—	13	14	13	14	13	14	27	29	29	34
C 41 2_3.6	3.6	—	—	—	—	—	—	—	—	8.9	9.4	8.8	9.8	8.8	9.8	23	25	25	30
C 41 2_4.7	4.7	—	—	—	—	—	—	—	—	6.6	7.1	6.5	7.5	6.5	7.5	21	23	23	28
C 41 2_6.0	6.0	—	—	—	—	5.3	5.8	5.3	5.8	5.4	5.9	5.3	6.3	5.3	6.3	19	22	21	26
C 41 2_6.4	6.4	—	—	—	—	—	—	—	—	7.2	7.7	7.1	8.1	7.1	8.1	21	24	23	28
C 41 2_7.1	7.1	—	—	—	—	—	—	—	—	7.0	7.5	6.9	7.9	6.9	7.9	21	24	23	28
C 41 2_8.6	8.6	—	—	—	—	—	—	—	—	5.8	6.3	5.7	6.7	5.7	6.7	20	22	22	27
C 41 2_9.6	9.6	—	—	—	—	—	—	—	—	5.7	6.2	5.6	6.6	5.6	6.6	20	22	22	27
C 41 2_11.2	11.2	—	—	—	—	—	—	—	—	4.7	5.2	4.6	5.6	4.6	5.6	19	21	21	26
C 41 2_12.4	12.4	—	—	—	—	—	—	—	—	4.7	5.2	4.6	5.6	4.6	5.6	19	21	21	26
C 41 2_14.2	14.2	—	—	—	—	4.2	4.7	4.2	4.7	4.3	4.8	4.2	5.2	4.2	5.2	18	21	20	25
C 41 2_15.8	15.8	—	—	—	—	4.1	4.6	4.1	4.6	4.2	4.7	4.1	5.1	4.1	5.1	18	21	20	25
C 41 2_17.8	17.8	—	—	—	—	3.8	5.3	3.8	5.3	3.9	4.4	3.8	4.8	3.8	4.8	18	20	20	25
C 41 2_19.8	19.8	—	—	—	—	3.8	4.2	3.8	4.2	3.9	4.4	3.8	4.8	3.8	4.8	18	20	20	25
C 41 2_22.6	22.6	—	—	—	—	3.4	3.9	3.4	3.9	3.5	4.0	3.4	4.4	3.4	4.4	18	20	20	25
C 41 2_25.0	25.0	—	—	—	—	3.4	3.9	3.4	3.9	3.5	4.0	3.4	4.4	3.4	4.4	18	20	20	25
C 41 2_28.3	28.3	—	—	—	—	3.3	3.7	3.3	3.7	3.3	3.8	3.2	4.2	3.2	4.2	17	20	19	24
C 41 2_31.4	31.4	—	—	—	—	3.3	3.7	3.3	3.7	3.3	3.8	3.2	4.2	3.2	4.2	17	20	19	24
C 41 2_33.4	33.4	—	—	—	—	3.2	3.6	3.2	3.6	3.2	3.7	3.1	4.1	3.1	4.1	—	—	—	—
C 41 2_37.1	37.1	—	—	—	—	3.2	3.6	3.2	3.6	3.2	3.7	3.1	4.1	3.1	4.1	—	—	—	—
C 41 2_44.8	44.8	—	—	—	—	3.1	3.5	3.1	3.5	3.2	3.7	3.1	4.1	3.1	4.1	—	—	—	—
C 41 3_28.5	28.5	—	—	—	—	—	—	—	—	5.4	5.9	5.3	6.3	5.3	6.3	19	22	21	26
C 41 3_31.2	31.2	—	—	—	—	—	—	—	—	5.4	5.9	5.3	6.3	5.3	6.3	19	22	21	26
C 41 3_36.8	36.8	—	—	—	—	—	—	—	—	4.5	5.0	4.4	5.4	4.4	5.4	19	21	21	26
C 41 3_40.3	40.3	—	—	—	—	—	—	—	—	4.5	5.0	4.4	5.4	4.4	5.4	19	21	21	26
C 41 3_47.0	47.0	—	—	—	—	4.0	4.5	4.0	4.5	4.1	4.6	4.0	5.0	4.0	5.0	18	21	20	25
C 41 3_51.5	51.5	—	—	—	—	4.0	4.5	4.0	4.5	4.1	4.6	4.0	5.0	4.0	5.0	18	21	20	25
C 41 3_58.7	58.7	—	—	—	—	3.7	4.2	3.7	4.2	3.8	4.3	3.7	4.7	3.7	4.7	18	20	20	25
C 41 3_64.3	64.3	—	—	—	—	3.7	4.2	3.7	4.2	3.8	4.3	3.7	4.7	3.7	4.7	18	20	20	25
C 41 3_74.4	74.4	—	—	—	—	3.4	3.9	3.4	3.9	3.5	4.0	3.4	4.4	3.4	4.4	18	20	20	25
C 41 3_81.5	81.5	—	—	—	—	3.4	3.9	3.4	3.9	3.5	4.0	3.4	4.4	3.4	4.4	18	20	20	25
C 41 3_93.3	93.3	—	—	—	—	3.2	3.7	3.2	3.7	3.3	3.8	3.2	4.2	3.2	4.2	17	20	19	24
C 41 3_102.3	102.3	—	—	—	—	3.2	3.7	3.2	3.7	3.3	3.8	3.2	4.2	3.2	4.2	17	20	19	24
C 41 3_110.1	110.1	—	—	—	—	3.1	3.6	3.1	3.6	3.2	3.7	3.1	4.1	3.1	4.1	—	—	—	—
C 41 3_120.6	120.6	—	—	—	—	3.1	3.6	3.1	3.6	3.2	3.7	3.1	4.1	3.1	4.1	—	—	—	—
C 41 3_132.9	132.9	—	—	—	—	3.1	3.6	3.1	3.6	3.2	3.7	3.1	4.1	3.1	4.1	—	—	—	—
C 41 3_145.6	145.6	—	—	—	—	3.1	3.6	3.1	3.6	3.2	3.7	3.1	4.1	3.1	4.1	—	—	—	—
C 41 3_164.1	164.1	—	—	—	—	3.0	3.5	3.0	3.5	3.1	3.6	3.0	4.0	3.0	4.0	—	—	—	—
C 41 3_179.9	179.9	—	—	—	—	3.0	3.5	3.0	3.5	3.1	3.6	3.0	4.0	3.0	4.0	—	—	—	—
C 41 3_190.8	190.8	—	—	—	—	2.9	3.4	2.9	3.4	3.0	3.5	2.9	3.9	2.9	3.9	—	—	—	—
C 41 3_209.1	209.1	—	—	—	—	2.9	3.4	2.9	3.4	3.0	3.5	2.9	3.9	2.9	3.9	—	—	—	—
C 41 4_239.9	239.9	0.42	0.68	0.44	0.88	—	—	3.0	3.4	3.1	3.6	3.0	4.0	—	—	—	—	—	—
C 41 4_263.0	263.0	0.42	0.68	0.44	0.88	—	—	3.0	3.4	3.1	3.6	3.0	4.0	—	—	—	—	—	—
C 41 4_304.2	304.2	0.40	0.66	0.42	0.86	—	—	3.0	3.4	3.0	3.5	2.9	3.9	—	—	—	—	—	—
C 41 4_333.4	333.4	0.40	0.66	0.42	0.86	—	—	3.0	3.4	3.0	3.5	2.9	3.9	—	—	—	—	—	—
C 41 4_381.8	381.8	0.39	0.65	0.41	0.85	—	—	2.9	3.4	3.0	3.5	2.9	3.9	—	—	—	—	—	—
C 41 4_418.5	418.5	0.39	0.65	0.41	0.85	—	—	2.9	3.4	3.0	3.5	2.9	3.9	—	—	—	—	—	—
C 41 4_450.2	450.2	0.39	0.65	0.41	0.85	—	—	2.9	3.4	3.0	3.5	2.9	3.9	—	—	—	—	—	—
C 41 4_493.5	493.5	0.39	0.65	0.41	0.85	—	—	2.9	3.4	3.0	3.5	2.9	3.9	—	—	—	—	—	—
C 41 4_543.5	543.5	0.39	0.65	0.41	0.85	—	—	2.9	3.4	3.0	3.5	2.9	3.9	—	—	—	—	—	—
C 41 4_595.8	595.8	0.39	0.65	0.41	0.85	—	—	2.9	3.4	3.0	3.5	2.9	3.9	—	—	—	—	—	—
C 41 4_671.3	671.3	0.37	0.63	0.39	0.83	—	—	2.9	3.4	3.0	3.5	2.9	3.9	—	—	—	—	—	—
C 41 4_735.9	735.9	0.37	0.63	0.39	0.83	—	—	2.9	3.4	3.0	3.5	2.9	3.9	—	—	—	—	—	—
C 41 4_780.4	780.4	0.37	0.63	0.39	0.83	—	—	2.9	3.4	3.0	3.5	2.9	3.9	—	—	—	—	—	—
C 41 4_855.5	855.5	0.37	0.63	0.39	0.83	—	—	2.9	3.4	3.0	3.5	2.9	3.9	—	—	—	—	—	—

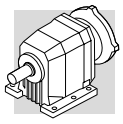

C 51

	i	J (•10-4) [kgm2]										
			IEC									
			63	71	80	90	100	112	132	160	180	
C 51 2_2.6	2.6	15	—	—	17	17	19	19	33	79	76	25
C 51 2_3.3	3.3	10	—	—	13	13	14	14	29	75	72	21
C 51 2_4.5	4.5	6.3	—	—	9.2	9.1	10	10	25	71	68	17
C 51 2_5.6	5.6	4.1	—	—	7.0	6.9	8.2	8.2	23	69	66	15
C 51 2_7.0	7.0	8.1	—	—	11	11	12	12	27	73	70	19
C 51 2_7.8	7.8	7.8	—	—	11	11	12	12	27	73	70	18
C 51 2_8.8	8.8	6.0	—	—	8.9	8.8	10	10	25	71	68	17
C 51 2_9.8	9.8	5.8	—	—	8.7	8.6	9.9	9.9	25	71	68	16
C 51 2_11.8	11.8	4.1	—	—	7.0	6.9	8.2	8.2	23	69	66	15
C 51 2_13.1	13.1	4.0	—	—	6.9	6.8	8.1	8.1	23	69	66	15
C 51 2_15.0	15.0	2.7	—	—	5.6	5.5	6.8	6.8	22	68	65	13
C 51 2_16.6	16.6	2.6	—	—	5.5	5.4	6.7	6.7	22	68	65	13
C 51 2_18.9	18.9	2.0	3.5	3.5	4.9	4.8	6.1	6.1	21	67	64	13
C 51 2_21.0	21.0	1.9	3.4	3.4	4.8	4.7	6.0	6.0	21	67	64	12
C 51 2_23.4	23.4	1.5	3.0	3.0	4.4	4.3	5.6	5.6	20	66	63	12
C 51 2_25.9	25.9	1.4	2.9	2.9	4.3	4.2	5.5	5.5	20	66	63	12
C 51 2_29.8	29.8	0.90	2.4	2.4	3.8	3.7	5.0	5.0	20	66	63	11
C 51 2_33.0	33.0	0.90	2.4	2.4	3.8	3.7	5.0	5.0	20	66	63	11
C 51 2_36.4	36.4	0.70	2.2	2.2	3.6	3.5	4.8	4.8	20	66	63	11
C 51 2_40.4	40.4	0.70	2.2	2.2	3.6	3.5	4.8	4.8	20	66	63	11
C 51 2_43.1	43.1	0.50	2.0	2.0	3.4	3.3	4.6	4.6	—	—	—	11
C 51 2_47.8	47.8	0.50	2.0	2.0	3.4	3.3	4.6	4.6	—	—	—	11
C 51 2_51.4	51.4	0.40	1.9	1.9	3.3	3.2	4.5	4.5	—	—	—	11
C 51 2_57.0	57.0	0.40	1.9	1.9	3.3	3.2	4.5	4.5	—	—	—	11
C 51 3_21.8	21.8	6.8	—	—	9.7	9.6	11	11	26	72	69	17
C 51 3_23.9	23.9	6.8	—	—	9.7	9.6	11	11	26	72	69	17
C 51 3_27.4	27.4	5.2	—	—	8.1	8.0	9.3	9.3	24	70	67	16
C 51 3_30.1	30.1	5.2	—	—	8.1	8.0	9.3	9.3	24	70	67	16
C 51 3_37.0	37.0	3.6	—	—	6.5	6.4	7.7	7.7	23	69	66	14
C 51 3_40.5	40.5	3.6	—	—	6.5	6.4	7.7	7.7	23	69	66	14
C 51 3_46.7	46.7	2.4	—	—	5.3	5.2	6.5	6.5	21	67	64	13
C 51 3_51.2	51.2	2.4	—	—	5.3	5.2	6.5	6.5	21	67	64	13
C 51 3_59.0	59.0	1.8	3.3	3.3	4.7	4.6	5.9	5.9	21	67	64	12
C 51 3_64.6	64.6	1.8	3.3	3.3	4.7	4.6	5.9	5.9	21	67	64	12
C 51 3_72.9	72.9	1.3	2.8	2.8	4.2	4.1	5.4	5.4	20	66	63	12
C 51 3_79.9	79.9	1.3	2.8	2.8	4.2	4.1	5.4	5.4	20	66	63	12
C 51 3_93.0	93.0	0.80	2.3	2.3	3.7	3.6	4.9	4.9	20	66	63	11
C 51 3_101.8	101.8	0.80	2.3	2.3	3.7	3.6	4.9	4.9	20	66	63	11
C 51 3_113.6	113.6	0.60	2.1	2.1	3.5	3.4	4.7	4.7	20	66	63	11
C 51 3_124.4	124.4	0.60	2.1	2.1	3.5	3.4	4.7	4.7	20	66	63	11
C 51 3_134.6	134.6	0.50	2.0	2.0	3.4	3.3	4.6	4.6	—	—	—	11
C 51 3_147.4	147.4	0.50	2.0	2.0	3.4	3.3	4.6	4.6	—	—	—	11
C 51 3_160.5	160.5	0.40	1.9	1.9	3.3	3.2	4.5	4.5	—	—	—	11
C 51 3_175.8	175.8	0.40	1.9	1.9	3.3	3.2	4.5	4.5	—	—	—	11
C 51 3_197.9	197.9	0.30	1.8	1.8	3.2	3.1	4.4	4.4	—	—	—	11
C 51 3_216.7	216.7	0.30	1.8	1.8	3.2	3.1	4.4	4.4	—	—	—	11
C 51 4_240.9	240.9	0.30	1.8	1.8	3.2	3.1	4.4	4.4	—	—	—	1.2
C 51 4_263.8	263.8	0.30	1.8	1.8	3.2	3.1	4.4	4.4	—	—	—	1.2
C 51 4_297.8	297.8	0.30	1.8	1.8	3.2	3.1	4.4	4.4	—	—	—	1.2
C 51 4_326.1	326.1	0.30	1.8	1.8	3.2	3.1	4.4	4.4	—	—	—	1.2
C 51 4_379.6	379.6	0.20	1.7	1.7	3.1	3.0	4.3	4.3	—	—	—	1.1
C 51 4_415.7	415.7	0.20	1.7	1.7	3.1	3.0	4.3	4.3	—	—	—	1.1
C 51 4_463.9	463.9	0.20	1.7	1.7	3.1	3.0	4.3	4.3	—	—	—	1.1
C 51 4_508.0	508.0	0.20	1.7	1.7	3.1	3.0	4.3	4.3	—	—	—	1.1
C 51 4_549.7	549.7	0.20	1.7	1.7	3.1	3.0	4.3	4.3	—	—	—	1.1
C 51 4_602.0	602.0	0.20	1.7	1.7	3.1	3.0	4.3	4.3	—	—	—	1.1
C 51 4_655.4	655.4	0.20	1.7	1.7	3.1	3.0	4.3	4.3	—	—	—	1.1
C 51 4_717.7	717.7	0.20	1.7	1.7	3.1	3.0	4.3	4.3	—	—	—	1.1
C 51 4_808.0	808.0	0.20	1.7	1.7	3.1	3.0	4.3	4.3	—	—	—	1.1
C 51 4_884.9	884.9	0.20	1.7	1.7	3.1	3.0	4.3	4.3	—	—	—	1.1

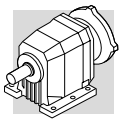

C 51

	i	J (•10-4) [kgm2]											
		SERVO											
		80B		95A		80C 95B 110A		95C 110B 130A		130B 180A		180B	
		SK	SC	SK	SC	SK	SC	SK	SC	SK	SC	SK	SC
C 51 2_2.6	2.6	—	—	—	—	17	18	17	18	32	34	33	38
C 51 2_3.3	3.3	—	—	—	—	13	14	13	14	27	29	29	34
C 51 2_4.5	4.5	—	—	—	—	9.2	9.7	9.1	10	23	26	25	30
C 51 2_5.6	5.6	—	—	—	—	7.0	7.5	6.9	7.9	21	24	23	28
C 51 2_7.0	7.0	—	—	—	—	11	12	11	12	25	28	27	32
C 51 2_7.8	7.8	—	—	—	—	11	12	11	12	25	27	27	32
C 51 2_8.8	8.8	—	—	—	—	8.9	9.4	8.8	9.8	23	25	25	30
C 51 2_9.8	9.8	—	—	—	—	8.7	9.2	8.6	9.6	23	25	25	30
C 51 2_11.8	11.8	—	—	—	—	7.0	7.5	6.9	7.9	21	24	23	28
C 51 2_13.1	13.1	—	—	—	—	6.9	7.4	6.8	7.8	21	23	23	28
C 51 2_15.0	15.0	—	—	—	—	5.6	6.1	5.5	6.5	20	22	22	27
C 51 2_16.6	16.6	—	—	—	—	5.5	6.0	5.4	6.4	20	22	22	27
C 51 2_18.9	18.9	4.8	5.3	4.8	5.3	4.9	5.4	4.8	5.8	19	21	21	26
C 51 2_21.0	21.0	4.7	5.2	4.7	5.2	4.8	5.3	4.7	5.7	19	21	21	26
C 51 2_23.4	23.4	4.3	4.8	4.3	4.8	4.4	4.3	4.3	5.3	18	21	20	25
C 51 2_25.9	25.9	4.2	4.7	4.2	4.7	4.3	4.8	4.2	5.2	18	21	20	25
C 51 2_29.8	29.8	3.7	4.2	3.7	4.2	3.8	4.3	3.7	4.7	18	20	20	25
C 51 2_33.0	33.0	3.7	4.2	3.7	4.2	3.8	4.3	3.7	4.7	18	20	20	25
C 51 2_36.4	36.4	3.5	4.0	3.5	4.0	3.6	4.1	3.5	4.5	18	20	20	25
C 51 2_40.4	40.4	3.5	4.0	3.5	4.0	3.6	4.1	3.5	4.5	18	20	20	25
C 51 2_43.1	43.1	3.3	3.8	3.3	3.8	3.4	3.9	3.3	4.3	—	—	—	—
C 51 2_47.8	47.8	3.3	3.8	3.3	3.8	3.4	3.9	3.3	4.3	—	—	—	—
C 51 2_51.4	51.4	3.2	3.7	3.2	3.7	3.3	3.8	3.2	4.2	—	—	—	—
C 51 2_57.0	57.0	3.2	3.7	3.2	3.7	3.3	3.8	3.2	4.2	—	—	—	—
C 51 3_21.8	21.8	—	—	—	—	9.7	10	9.6	11	24	26	26	31
C 51 3_23.9	23.9	—	—	—	—	9.7	10	9.6	11	24	26	26	31
C 51 3_27.4	27.4	—	—	—	—	8.1	8.6	8.0	9.0	22	25	24	29
C 51 3_30.1	30.1	—	—	—	—	8.1	8.6	8.0	9.0	22	25	24	29
C 51 3_37.0	37.0	—	—	—	—	6.5	7.0	6.4	7.4	21	23	23	28
C 51 3_40.5	40.5	—	—	—	—	6.5	7.0	6.4	7.4	21	23	23	28
C 51 3_46.7	46.7	—	—	—	—	5.3	5.8	5.2	6.2	19	22	21	26
C 51 3_51.2	51.2	—	—	—	—	5.3	5.8	5.2	6.2	19	22	21	26
C 51 3_59.0	59.0	4.6	5.1	4.6	5.1	4.7	5.2	4.6	5.6	19	21	21	26
C 51 3_64.6	64.6	4.6	5.1	4.6	5.1	4.7	5.2	4.6	5.6	19	21	21	26
C 51 3_72.9	72.9	4.1	4.6	4.1	4.6	4.2	5.2	4.1	5.1	18	21	20	25
C 51 3_79.9	79.9	4.1	4.6	4.1	4.6	4.2	5.2	4.1	5.1	18	21	20	25
C 51 3_93.0	93.0	3.6	4.1	3.6	4.1	3.7	4.2	3.6	4.6	18	20	20	25
C 51 3_101.8	101.8	3.6	4.1	3.6	4.1	3.7	4.2	3.6	4.6	18	20	20	25
C 51 3_113.6	113.6	3.4	3.9	3.4	3.9	3.5	4.0	3.4	4.4	18	20	20	25
C 51 3_124.4	124.4	3.4	3.9	3.4	3.9	3.5	4.0	3.4	4.4	18	20	20	25
C 51 3_134.6	134.6	3.3	3.8	3.3	3.8	3.4	3.9	3.3	4.3	—	—	—	—
C 51 3_147.4	147.4	3.3	3.8	3.3	3.8	3.4	3.9	3.3	4.3	—	—	—	—
C 51 3_160.5	160.5	3.2	3.7	3.2	3.7	3.3	3.8	3.2	4.2	—	—	—	—
C 51 3_175.8	175.8	3.2	3.7	3.2	3.7	3.3	3.8	3.2	4.2	—	—	—	—
C 51 3_197.9	197.9	3.1	3.6	3.1	3.6	3.2	3.7	3.1	4.1	—	—	—	—
C 51 3_216.7	216.7	3.1	3.6	3.1	3.6	3.2	3.7	3.1	4.1	—	—	—	—
C 51 4_240.9	240.9	—	—	3.1	3.6	3.2	3.7	3.1	4.1	—	—	—	—
C 51 4_263.8	263.8	—	—	3.1	3.6	3.2	3.7	3.1	4.1	—	—	—	—
C 51 4_297.8	297.8	—	—	3.1	3.6	3.2	3.7	3.1	4.1	—	—	—	—
C 51 4_326.1	326.1	—	—	3.1	3.6	3.2	3.7	3.1	4.1	—	—	—	—
C 51 4_379.6	379.6	—	—	3.0	3.5	3.1	3.6	3.0	4.0	—	—	—	—
C 51 4_415.7	415.7	—	—	3.0	3.5	3.1	3.6	3.0	4.0	—	—	—	—
C 51 4_463.9	463.9	—	—	3.0	3.5	3.1	3.6	3.0	4.0	—	—	—	—
C 51 4_508.0	508.0	—	—	3.0	3.5	3.1	3.6	3.0	4.0	—	—	—	—
C 51 4_549.7	549.7	—	—	3.0	3.5	3.1	3.6	3.0	4.0	—	—	—	—
C 51 4_602.0	602.0	—	—	3.0	3.5	3.1	3.6	3.0	4.0	—	—	—	—
C 51 4_655.4	655.4	—	—	3.0	3.5	3.1	3.6	3.0	4.0	—	—	—	—
C 51 4_717.7	717.7	—	—	3.0	3.5	3.1	3.6	3.0	4.0	—	—	—	—
C 51 4_808.0	808.0	—	—	3.0	3.5	3.1	3.6	3.0	4.0	—	—	—	—
C 51 4_884.9	884.9	—	—	3.0	3.5	3.1	3.6	3.0	4.0	—	—	—	—

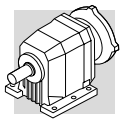

C 61

	i	J (•10-4) [kgm2]										
			IEC									
			63	71	80	90	100	112	132	160	180	
C 61 2_2.8	2.8	30	—	—	—	—	—	—	49	78	76	52
C 61 2_3.7	3.7	19	—	—	22	22	23	23	38	78	76	41
C 61 2_4.6	4.6	14	—	—	17	17	18	18	33	78	76	36
C 61 2_6.0	6.0	8.8	—	—	12	12	13	13	28	78	76	31
C 61 2_6.7	6.7	14	—	—	—	—	—	—	33	78	76	36
C 61 2_7.5	7.5	13	—	—	—	—	—	—	32	78	76	35
C 61 2_8.8	8.8	13	—	—	16	16	17	17	32	78	76	35
C 61 2_9.8	9.8	12	—	—	15	15	16	16	31	78	76	34
C 61 2_10.9	10.9	9.6	—	—	13	12	14	14	29	78	76	31
C 61 2_12.1	12.1	9.2	—	—	12	12	13	13	28	78	76	31
C 61 2_14.3	14.3	5.8	—	—	8.7	8.6	9.9	9.9	25	78	76	28
C 61 2_15.9	15.9	5.6	—	—	8.5	8.4	9.7	9.7	25	78	76	27
C 61 2_17.7	17.7	4.4	—	—	7.3	7.2	8.5	8.5	23	78	76	26
C 61 2_19.6	19.6	4.3	—	—	7.2	7.1	8.4	8.4	23	78	76	26
C 61 2_22.4	22.4	3.2	4.7	4.7	6.1	6.0	7.3	7.3	22	78	76	25
C 61 2_24.8	24.8	3.1	4.6	4.6	6.0	5.9	7.2	7.2	22	78	76	25
C 61 2_27.4	27.4	2.1	3.6	3.6	5.0	4.9	6.2	6.2	21	78	76	24
C 61 2_30.4	30.4	2.2	3.7	3.7	5.1	5.0	6.3	6.3	21	78	76	24
C 61 2_34.2	34.2	1.5	3.0	3.0	4.4	4.3	5.6	5.6	20	78	76	23
C 61 2_38.0	38.0	1.5	3.0	3.0	4.4	4.3	5.6	5.6	20	78	76	23
C 61 3_26.8	26.8	10	—	—	13	13	14	14	29	78	76	32
C 61 3_29.4	29.4	10	—	—	13	13	14	14	29	78	76	32
C 61 3_33.0	33.0	8.1	—	—	11	11	12	12	27	78	76	30
C 61 3_36.1	36.1	8.1	—	—	11	11	12	12	27	78	76	30
C 61 3_43.4	43.4	5.0	—	—	7.9	7.8	9.1	9.1	24	78	76	27
C 61 3_47.6	47.6	5.0	—	—	7.9	7.8	9.1	9.1	24	78	76	27
C 61 3_53.5	53.5	3.9	—	—	6.8	6.7	8.0	8.0	23	78	76	26
C 61 3_58.6	58.6	3.8	—	—	6.7	6.6	7.9	7.9	23	78	76	26
C 61 3_67.7	67.7	2.8	4.3	4.3	5.7	5.6	6.9	6.9	22	78	76	25
C 61 3_74.2	74.2	2.8	4.3	4.3	5.7	5.6	6.9	6.9	22	78	76	25
C 61 3_83.0	83.0	1.9	3.4	3.4	4.8	4.7	6.0	6.0	21	78	76	24
C 61 3_91.0	91.0	1.9	3.4	3.4	4.8	4.7	6.0	6.0	21	78	76	24
C 61 3_103.6	103.6	1.3	2.8	2.8	4.2	4.1	5.4	5.4	20	78	76	23
C 61 3_113.6	113.6	1.3	2.8	2.8	4.2	4.1	5.4	5.4	20	78	76	23
C 61 3_128.1	128.1	1.0	2.5	2.5	3.9	3.8	5.1	5.1	20	78	76	23
C 61 3_140.5	140.5	1.0	2.5	2.5	3.9	3.8	5.1	5.1	20	78	76	23
C 61 3_150.0	150.0	0.70	2.2	2.2	3.6	3.5	4.8	4.8	—	—	—	23
C 61 3_164.5	164.5	0.70	2.2	2.2	3.6	3.5	4.8	4.8	—	—	—	23
C 61 3_178.6	178.6	0.60	2.1	2.1	3.5	3.4	4.7	4.7	—	—	—	22
C 61 3_195.8	195.8	0.60	2.1	2.1	3.5	3.4	4.7	4.7	—	—	—	22
C 61 4_217.4	217.4	0.67	2.2	2.2	3.6	3.5	4.8	4.8	—	—	—	11
C 61 4_238.3	238.3	0.67	2.2	2.2	3.6	3.5	4.8	4.8	—	—	—	11
C 61 4_275.3	275.3	0.81	2.3	2.3	3.7	3.6	4.9	4.9	—	—	—	11
C 61 4_301.7	301.7	0.81	2.3	2.3	3.7	3.6	4.9	4.9	—	—	—	11
C 61 4_337.7	337.7	0.56	2.1	2.1	3.5	3.4	4.7	4.7	—	—	—	11
C 61 4_370.1	370.1	0.56	2.1	2.1	3.5	3.4	4.7	4.7	—	—	—	11
C 61 4_421.5	421.5	0.53	2.0	2.0	3.4	3.3	4.6	4.6	—	—	—	11
C 61 4_462.0	462.0	0.53	2.0	2.0	3.4	3.3	4.6	4.6	—	—	—	11
C 61 4_521.1	521.1	0.51	2.0	2.0	3.4	3.3	4.6	4.6	—	—	—	11
C 61 4_571.2	571.2	0.51	2.0	2.0	3.4	3.3	4.6	4.6	—	—	—	11
C 61 4_610.1	610.1	0.49	2.0	2.0	3.4	3.3	4.6	4.6	—	—	—	11
C 61 4_668.8	668.8	0.49	2.0	2.0	3.4	3.3	4.6	4.6	—	—	—	11
C 61 4_726.3	726.3	0.48	2.0	2.0	3.4	3.3	4.6	4.6	—	—	—	11
C 61 4_796.1	796.1	0.48	2.0	2.0	3.4	3.3	4.6	4.6	—	—	—	11

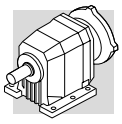

C 61

	i	J (•10-4) [kgm2]											
		SERVO											
		80B		95A		80C 95B 110A		95C 110B 130A		130B 180A		180B	
		SK	SC	SK	SC	SK	SC	SK	SC	SK	SC	SK	SC
C 61 2_2.8	2.8	—	—	—	—	—	—	—	—	47	49	49	54
C 61 2_3.7	3.7	—	—	—	—	22	23	22	23	36	38	38	43
C 61 2_4.6	4.6	—	—	—	—	17	18	17	18	31	33	33	38
C 61 2_6.0	6.0	—	—	—	—	12	13	12	13	26	28	28	33
C 61 2_6.7	6.7	—	—	—	—	—	—	—	—	31	33	33	38
C 61 2_7.5	7.5	—	—	—	—	—	—	—	—	30	32	32	37
C 61 2_8.8	8.8	—	—	—	—	16	17	16	17	30	32	32	37
C 61 2_9.8	9.8	—	—	—	—	15	16	15	16	23	31	31	36
C 61 2_10.9	10.9	—	—	—	—	13	14	12	13	27	29	29	34
C 61 2_12.1	12.1	—	—	—	—	12	13	12	13	26	29	28	33
C 61 2_14.3	14.3	—	—	—	—	8.7	9.2	8.6	9.6	23	25	25	30
C 61 2_15.9	15.9	—	—	—	—	8.5	9.0	8.4	9.4	23	25	25	30
C 61 2_17.7	17.7	—	—	—	—	7.3	7.8	7.2	8.2	21	24	23	28
C 61 2_19.6	19.6	—	—	—	—	7.2	7.7	7.1	8.1	21	24	23	28
C 61 2_22.4	22.4	—	—	6.0	6.5	6.1	6.6	6.0	7.0	20	23	22	27
C 61 2_24.8	24.8	—	—	5.9	6.4	6.0	6.5	5.9	6.9	20	23	22	27
C 61 2_27.4	27.4	—	—	4.9	5.4	5.0	5.5	4.9	5.9	19	22	21	26
C 61 2_30.4	30.4	—	—	5.0	5.5	5.1	5.6	5.0	6.0	19	22	21	26
C 61 2_34.2	34.2	—	—	4.3	4.8	4.4	4.9	4.3	5.3	18	21	20	25
C 61 2_38.0	38.0	—	—	4.3	4.8	4.4	4.9	4.3	5.3	18	21	20	25
C 61 3_26.8	26.8	—	—	—	—	13	14	13	14	27	29	29	34
C 61 3_29.4	29.4	—	—	—	—	13	14	13	14	27	29	29	34
C 61 3_33.0	33.0	—	—	—	—	11	12	11	12	25	28	27	32
C 61 3_36.1	36.1	—	—	—	—	11	12	11	12	25	28	27	32
C 61 3_43.4	43.4	—	—	—	—	7.9	8.4	7.8	8.8	22	24	24	29
C 61 3_47.6	47.6	—	—	—	—	7.9	8.4	7.8	8.8	22	24	24	29
C 61 3_53.5	53.5	—	—	—	—	6.8	7.3	6.7	7.7	21	23	23	28
C 61 3_58.6	58.6	—	—	—	—	6.7	7.2	6.6	7.6	21	23	23	28
C 61 3_67.7	67.7	—	—	5.6	6.1	5.7	6.2	5.6	6.6	20	22	22	27
C 61 3_74.2	74.2	—	—	5.6	6.1	5.7	6.2	5.6	6.6	20	22	22	27
C 61 3_83.0	83.0	—	—	4.7	5.2	4.8	5.3	4.7	5.7	19	21	21	26
C 61 3_91.0	91.0	—	—	4.7	5.2	4.8	5.3	4.7	5.7	19	21	21	26
C 61 3_103.6	103.6	—	—	4.1	4.6	4.2	4.7	4.1	5.1	18	21	20	25
C 61 3_113.6	113.6	—	—	4.1	4.6	4.2	4.7	4.1	5.1	18	21	20	25
C 61 3_128.1	128.1	—	—	3.8	4.3	3.9	4.4	3.8	4.8	18	20	20	25
C 61 3_140.5	140.5	—	—	3.8	4.3	3.9	4.4	3.8	4.8	18	20	20	25
C 61 3_150.0	150.0	—	—	3.5	4.0	3.6	4.1	3.5	4.5	—	—	—	—
C 61 3_164.5	164.5	—	—	3.5	4.0	3.6	4.1	3.5	4.5	—	—	—	—
C 61 3_178.6	178.6	—	—	3.4	3.9	3.5	4.0	3.4	4.4	—	—	—	—
C 61 3_195.8	195.8	—	—	3.4	3.9	3.5	4.0	3.4	4.4	—	—	—	—
C 61 4_217.4	217.4	3.5	3.9	3.5	3.9	3.6	4.1	3.5	4.5	—	—	—	—
C 61 4_238.3	238.3	3.5	3.9	3.5	3.9	3.6	4.1	3.5	4.5	—	—	—	—
C 61 4_275.3	275.3	3.6	4.1	3.6	4.1	3.7	4.2	3.6	4.6	—	—	—	—
C 61 4_301.7	301.7	3.6	4.1	3.6	4.1	3.7	4.2	3.6	4.6	—	—	—	—
C 61 4_337.7	337.7	3.4	3.8	3.4	3.8	3.5	4.0	3.4	4.4	—	—	—	—
C 61 4_370.1	370.1	3.4	3.8	3.4	3.8	3.5	4.0	3.4	4.4	—	—	—	—
C 61 4_421.5	421.5	3.4	3.8	3.4	3.8	3.4	3.9	3.3	4.3	—	—	—	—
C 61 4_462.0	462.0	3.4	3.8	3.4	3.8	3.4	3.9	3.3	4.3	—	—	—	—
C 61 4_521.1	521.1	3.3	3.8	3.3	3.8	3.4	3.9	3.3	4.3	—	—	—	—
C 61 4_571.2	571.2	3.3	3.8	3.3	3.8	3.4	3.9	3.3	4.3	—	—	—	—
C 61 4_610.1	610.1	3.3	3.7	3.3	3.7	3.4	3.9	3.3	4.3	—	—	—	—
C 61 4_668.8	668.8	3.3	3.7	3.3	3.7	3.4	3.9	3.3	4.3	—	—	—	—
C 61 4_726.3	726.3	3.3	3.7	3.3	3.7	3.4	3.9	3.3	4.3	—	—	—	—
C 61 4_796.1	796.1	3.3	3.7	3.3	3.7	3.4	3.9	3.3	4.3	—	—	—	—

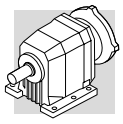

C 70

	i	**J** (•10-4) [kgm2]													
			IEC												
			63	**71**	**80**	**90**	**100 112**	**132**	**160**	**180**	**200**	**225**	**250**	**280**	
C 70 2_4.6	4.6	—	—	—	—	—	—	—	136	133	143	—	—	—	99
C 70 2_5.9	5.9	—	—	—	—	—	—	—	119	117	126	—	—	—	32
C 70 2_6.3	6.3	—	—	—	—	—	—	—	129	127	136	—	—	—	93
C 70 2_7.5	7.5	26	—	—	—	—	—	45	105	102	112	—	—	—	68
C 70 2_8.0	8.0	—	—	—	—	—	—	—	115	113	122	—	—	—	78
C 70 2_9.5	9.5	19	—	—	—	—	—	38	97	95	—	—	—	—	60
C 70 2_10.2	10.2	24	—	—	—	—	—	43	102	100	109	—	—	—	65
C 70 2_11.2	11.2	15	—	—	—	—	—	34	94	91	—	—	—	—	56
C 70 2_13.0	13.0	17	—	—	—	—	—	36	95	93	—	—	—	—	58
C 70 2_14.1	14.1	9.9	—	—	12	12	14	29	88	86	—	—	—	—	51
C 70 2_15.3	15.3	14	—	—	—	—	—	33	93	90	—	—	—	—	55
C 70 2_16.7	16.7	6.9	—	—	9.5	9.4	11	26	85	83	—	—	—	—	48
C 70 2_19.3	19.3	9.1	—	—	12	12	13	28	87	85	—	—	—	—	50
C 70 2_22.9	22.9	6.4	—	—	9.0	8.9	10	25	85	83	—	—	—	—	48
C 70 2_27.7	27.7	5.2	—	—	8.0	7.9	9.2	24	84	81	—	—	—	—	46
C 70 2_34.7	34.7	3.2	—	—	6.1	6.0	7.3	22	82	79	—	—	—	—	44
C 70 3_41.3	41.3	4.4	—	—	7.2	7.2	8.5	23	83	80	—	—	—	—	46
C 70 3_44.7	44.7	4.2	—	—	7.0	7.0	8.2	23	83	80	—	—	—	—	45
C 70 3_52.2	52.2	3.0	—	—	5.8	5.8	7.0	22	81	79	—	—	—	—	44
C 70 3_56.5	56.5	2.8	—	—	5.7	5.6	6.9	22	81	79	—	—	—	—	44
C 70 3_65.9	65.9	2.0	—	—	4.9	4.8	6.1	21	80	78	—	—	—	—	43
C 70 3_71.3	71.3	2.0	—	—	4.8	4.8	6.0	21	80	78	—	—	—	—	43
C 70 3_81.4	81.4	1.5	—	—	4.3	4.3	5.6	20	80	78	—	—	—	—	43
C 70 3_88.2	88.2	1.4	—	—	4.3	4.2	5.5	20	80	76	—	—	—	—	43
C 70 3_103.8	103.8	1.0	—	—	3.8	3.8	5.1	20	79	77	—	—	—	—	42
C 70 3_112.4	112.4	0.90	—	—	3.8	3.7	5.0	20	79	77	—	—	—	—	42
C 70 3_126.8	126.8	0.70	—	—	3.5	3.5	4.8	20	79	77	—	—	—	—	42
C 70 3_137.4	137.4	0.70	—	—	3.5	3.5	4.7	20	79	77	—	—	—	—	42
C 70 3_150.3	150.3	0.50	—	—	3.4	3.4	9.6	—	—	—	—	—	—	—	42
C 70 3_162.8	162.8	0.50	—	—	3.4	3.4	4.6	—	—	—	—	—	—	—	42
C 70 3_179.2	179.2	0.40	—	—	3.2	3.3	4.5	—	—	—	—	—	—	—	42
C 70 3_194.1	194.1	0.40	—	—	3.2	3.2	4.5	—	—	—	—	—	—	—	42
C 70 3_220.9	220.9	0.30	—	—	3.1	3.1	4.3	—	—	—	—	—	—	—	41
C 70 3_239.3	239.3	0.30	—	—	3.1	3.1	4.3	—	—	—	—	—	—	—	41
C 70 4_251.3	251.3	0.70	2.2	2.2	3.5	3.5	4.8	20	—	—	—	—	—	—	11
C 70 4_272.2	272.2	0.70	2.2	2.1	3.5	3.5	4.8	20	—	—	—	—	—	—	11
C 70 4_317.9	317.9	0.50	2.0	2.0	3.4	3.3	4.6	19	—	—	—	—	—	—	11
C 70 4_344.3	344.3	0.50	2.0	2.0	3.4	3.3	4.6	19	—	—	—	—	—	—	11
C 70 4_409.4	409.4	0.40	1.8	1.8	3.2	3.2	4.5	19	—	—	—	—	—	—	7.9
C 70 4_443.5	443.5	0.40	1.8	1.8	3.2	3.2	4.5	19	—	—	—	—	—	—	7.9
C 70 4_512.0	512.0	0.30	1.7	1.7	3.1	3.1	4.4	19	—	—	—	—	—	—	7.8
C 70 4_554.7	554.7	0.30	1.7	1.7	3.1	3.1	4.4	19	—	—	—	—	—	—	7.8
C 70 4_606.8	606.8	0.20	1.7	1.7	3.1	3.0	4.3	—	—	—	—	—	—	—	7.8
C 70 4_657.3	657.3	0.20	1.7	1.7	3.1	3.0	4.3	—	—	—	—	—	—	—	7.7
C 70 4_736.0	736.0	0.20	1.6	1.6	3.0	2.9	4.3	—	—	—	—	—	—	—	7.7
C 70 4_797.3	797.3	0.20	1.6	1.6	3.0	2.9	4.3	—	—	—	—	—	—	—	7.7
C 70 4_922.6	922.6	0.10	1.6	1.6	3.0	2.9	4.2	—	—	—	—	—	—	—	7.7
C 70 4_999.5	999.5	0.10	1.6	1.6	3.0	2.9	4.2	—	—	—	—	—	—	—	7.6
C 70 4_1069	1069	0.80	1.6	1.5	2.9	2.9	4.2	—	—	—	—	—	—	—	7.6
C 70 4_1158	1158	0.80	1.6	1.5	2.9	2.9	4.2	—	—	—	—	—	—	—	7.6
C 70 4_1362	1362	0.60	1.5	1.5	2.9	2.9	4.1	—	—	—	—	—	—	—	7.6
C 70 4_1476	1476	0.60	1.5	1.5	2.9	2.9	4.1	—	—	—	—	—	—	—	7.6

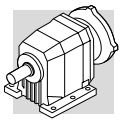

C 80

	i	J (•10-4) [kgm2]												
			IEC											
			63	71	80	90	100 112	132	160	180	200	225	250	280	
C 80 2_5.6	5.6	—	—	—	—	—	—	—	—	197	211	489	—	—	164
C 80 2_6.1	6.1	—	—	—	—	—	—	—	—	193	210	485	—	—	159
C 80 2_7.0	7.0	—	—	—	—	—	—	—	160	161	174	452	—	—	127
C 80 2_7.6	7.6	—	—	—	—	—	—	—	158	158	172	449	—	—	124
C 80 2_8.9	8.9	—	—	—	—	—	—	—	137	135	146	429	—	—	101
C 80 2_9.6	9.6	—	—	—	—	—	—	—	136	133	144	427	—	—	99
C 80 2_11.1	11.1	38	—	—	—	—	—	56	116	113	124	408	—	—	79
C 80 2_12.0	12.0	36	—	—	—	—	—	55	115	112	123	407	—	—	78
C 80 2_13.8	13.8	28	—	—	—	—	—	47	106	104	135	398	—	—	69
C 80 2_14.9	14.9	27	—	—	—	—	—	46	106	103	134	397	—	—	69
C 80 2_16.7	16.7	21	—	—	—	—	—	40	100	97	127	391	—	—	63
C 80 2_18.1	18.1	21	—	—	—	—	—	40	99	97	127	390	—	—	62
C 80 2_20.5	20.5	14	—	—	17	17	18	33	93	90	120	383	—	—	55
C 80 2_22.2	22.2	14	—	—	16	16	18	33	92	90	120	383	—	—	55
C 80 2_24.0	24.0	13	—	—	16	16	17	32	91	89	119	382	—	—	54
C 80 2_25.9	25.9	13	—	—	16	15	17	32	91	89	118	382	—	—	54
C 80 2_31.3	31.3	8.7	—	—	12	11	13	28	87	85	—	—	—	—	50
C 80 2_39.1	39.1	5.2	—	—	8.0	8.0	9.2	24	84	81	—	—	—	—	46
C 80 3_43.5	43.5	9.6	—	—	12	12	14	29	88	86	—	—	—	—	51
C 80 3_47.4	47.4	9.1	—	—	12	12	13	28	87	85	—	—	—	—	50
C 80 3_57.3	57.3	5.7	—	—	8.5	8.5	9.7	25	84	82	—	—	—	—	47
C 80 3_62.5	62.5	5.4	—	—	8.2	8.2	9.5	24	84	82	—	—	—	—	47
C 80 3_70.5	70.5	4.3	—	—	7.1	7.0	8.3	23	83	80	—	—	—	—	45
C 80 3_76.9	76.9	4.1	—	—	7.0	6.9	8.2	23	82	80	—	—	—	—	45
C 80 3_89.3	89.3	3.0	—	—	5.9	5.8	7.1	22	81	79	—	—	—	—	44
C 80 3_97.4	97.4	2.9	—	—	5.8	5.7	7.0	22	81	79	—	—	—	—	44
C 80 3_109.5	109.5	2.0	—	—	4.8	4.8	6.1	21	80	78	—	—	—	—	43
C 80 3_119.5	119.5	1.9	—	—	4.8	4.7	6.0	21	80	79	—	—	—	—	43
C 80 3_136.7	136.7	1.4	—	—	4.3	4.2	5.5	20	80	78	—	—	—	—	43
C 80 3_149.1	149.1	1.4	—	—	4.2	4.2	5.5	20	80	77	—	—	—	—	43
C 80 3_169.0	169.0	1.0	—	—	3.9	3.8	5.1	20	80	77	—	—	—	—	42
C 80 3_184.4	184.4	1.0	—	—	3.9	3.8	5.1	20	80	77	—	—	—	—	42
C 80 3_197.9	197.9	0.80	—	—	3.7	3.6	4.9	—	—	—	—	—	—	—	42
C 80 3_215.8	215.8	0.80	—	—	3.6	3.6	4.9	—	—	—	—	—	—	—	42
C 80 4_261.9	261.9	1.7	—	—	4.6	4.5	5.8	21	—	—	—	—	—	—	12
C 80 4_285.7	285.7	1.7	—	—	4.6	4.5	5.8	21	—	—	—	—	—	—	12
C 80 4_334.3	334.3	1.2	2.7	2.7	4.0	4.0	5.3	20	—	—	—	—	—	—	11
C 80 4_364.7	364.7	1.2	2.7	2.6	4.0	4.0	5.3	20	—	—	—	—	—	—	11
C 80 4_417.5	417.5	0.90	2.4	2.3	3.7	3.7	5.0	20	—	—	—	—	—	—	11
C 80 4_455.4	455.4	0.90	2.3	2.3	3.7	3.7	5.5	20	—	—	—	—	—	—	11
C 80 4_529.3	529.3	0.50	2.0	2.0	3.4	3.3	4.6	19	—	—	—	—	—	—	11
C 80 4_577.4	577.4	0.50	2.0	2.0	3.4	3.3	4.6	19	—	—	—	—	—	—	11
C 80 4_664.3	664.3	0.40	2.0	1.9	3.3	3.2	4.5	19	—	—	—	—	—	—	11
C 80 4_724.7	724.7	0.40	2.0	1.9	3.3	3.2	4.5	19	—	—	—	—	—	—	11
C 80 4_783.4	783.4	0.30	2.0	1.8	3.2	3.1	4.4	—	—	—	—	—	—	—	9.4
C 80 4_854.6	854.6	0.30	2.0	1.8	3.2	3.1	4.4	—	—	—	—	—	—	—	9.4
C 80 4_945.7	945.7	0.20	1.7	1.7	3.1	3.0	4.3	—	—	—	—	—	—	—	9.3
C 80 4_1032	1032	0.20	1.7	1.7	3.1	3.0	4.3	—	—	—	—	—	—	—	9.3
C 80 4_1168	1168	0.20	1.6	1.6	3.0	3.0	4.2	—	—	—	—	—	—	—	9.2
C 80 4_1274	1274	0.20	1.6	1.6	3.0	3.0	4.2	—	—	—	—	—	—	—	9.2
C 80 4_1358	1358	0.10	1.6	1.6	3.0	2.9	4.2	—	—	—	—	—	—	—	9.2
C 80 4_1481	1481	0.10	1.6	1.6	3.0	2.9	4.2	—	—	—	—	—	—	—	9.2

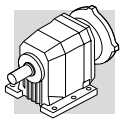

C 90

	i	J (•10-4) [kgm2]													
			IEC												
			63	71	80	90	100 112	132	160	180	200	225	250	280	
C 90 2_5.2	5.2	—	—	—	—	—	—	—	—	—	332	610	637	—	619
C 90 2_5.6	5.6	—	—	—	—	—	—	—	—	—	321	599	626	—	609
C 90 2_6.8	6.8	—	—	—	—	—	—	—	—	—	252	530	557	—	540
C 90 2_7.3	7.3	—	—	—	—	—	—	—	—	—	246	524	551	—	533
C 90 2_8.3	8.3	—	—	—	—	—	—	—	—	—	212	490	517	—	499
C 90 2_9.0	9.0	—	—	—	—	—	—	—	—	—	208	485	513	—	495
C 90 2_10.4	10.4	—	—	—	—	—	—	—	167	164	175	458	484	—	461
C 90 2_11.2	11.2	—	—	—	—	—	—	—	164	162	173	455	482	—	458
C 90 2_12.8	12.8	65	—	—	—	—	—	84	143	141	152	436	462	—	439
C 90 2_13.9	13.9	63	—	—	—	—	—	82	141	139	200	434	460	—	437
C 90 2_16.0	16.0	47	—	—	—	—	—	66	125	123	154	417	443	—	420
C 90 2_17.3	17.3	46	—	—	—	—	—	65	124	122	153	416	442	—	419
C 90 2_18.7	18.7	42	—	—	—	—	—	61	121	119	148	412	433	—	415
C 90 2_20.2	20.2	41	—	—	—	—	—	61	199	118	147	411	438	—	414
C 90 2_22.9	22.9	28	—	—	30	30	31	47	106	104	133	397	423	—	400
C 90 2_24.8	24.8	27	—	—	29	29	31	46	105	103	133	396	422	—	399
C 90 2_27.2	27.2	22	—	—	25	25	26	41	101	99	128	391	418	—	394
C 90 2_29.4	29.4	22	—	—	25	24	26	41	100	98	127	391	417	—	394
C 90 2_35.1	35.1	14	—	—	17	17	18	33	93	90	—	—	—	—	386
C 90 3_39.4	39.4	27	—	—	—	—	—	46	105	103	112	398	424	—	412
C 90 3_43.0	43.0	26	—	—	—	—	—	45	104	102	111	396	422	—	410
C 90 3_50.3	50.3	19	—	—	—	—	—	38	98	95	126	389	415	—	403
C 90 3_54.9	54.9	19	—	—	—	—	—	37	97	95	125	389	415	—	401
C 90 3_59.2	59.2	16	—	—	—	—	—	35	94	92	122	385	411	—	398
C 90 3_64.6	64.6	15	—	—	—	—	—	34	94	91	121	384	410	—	398
C 90 3_74.4	74.4	10	—	—	13	13	14	29	88	86	116	379	405	—	393
C 90 3_81.2	81.2	9.8	—	—	12	12	13	29	88	86	115	379	405	—	392
C 90 3_88.2	88.2	7.1	—	—	9.7	9.6	11	26	85	83	113	376	402	—	389
C 90 3_96.2	96.2	6.9	—	—	9.4	9.4	11	26	85	83	112	376	402	—	389
C 90 3_107.0	107.0	5.7	—	—	8.4	8.4	9.6	25	84	82	—	—	—	—	388
C 90 3_116.7	116.7	5.5	—	—	8.3	8.2	9.5	24	84	82	—	—	—	—	388
C 90 3_134.1	134.1	3.5	—	—	6.4	6.3	7.6	22	82	80	—	—	—	—	386
C 90 3_146.3	146.3	3.4	—	—	6.3	6.2	7.5	22	82	80	—	—	—	—	386
C 90 3_157.8	157.8	2.5	—	—	5.4	5.3	6.6	21	81	79	—	—	—	—	385
C 90 3_172.1	172.1	2.4	—	—	5.3	5.2	6.5	21	81	79	—	—	—	—	385
C 90 4_212.4	212.4	4.2	—	—	7.0	7.0	8.3	23	83	80	—	—	—	—	14
C 90 4_231.7	231.7	4.1	—	—	7.0	6.9	8.2	23	82	80	—	—	—	—	14
C 90 4_268.5	268.5	2.8	—	—	5.7	5.6	6.9	22	81	79	—	—	—	—	13
C 90 4_292.9	292.9	2.8	—	—	5.7	2.6	6.9	22	81	79	—	—	—	—	13
C 90 4_339.0	339.0	2.0	3.4	3.4	4.8	4.8	6.0	21	80	78	—	—	—	—	12
C 90 4_369.8	369.8	2.0	3.4	3.4	4.8	4.8	6.0	21	80	78	—	—	—	—	12
C 90 4_419.0	419.0	1.4	2.9	2.9	4.3	4.2	5.5	20	80	78	—	—	—	—	12
C 90 4_457.1	457.1	1.4	2.9	2.9	4.3	4.2	5.5	20	80	78	—	—	—	—	12
C 90 4_534.2	534.2	0.90	2.4	2.4	3.8	3.7	5.0	20	79	77	—	—	—	—	11
C 90 4_582.8	582.8	0.90	2.4	2.4	3.8	3.7	5.0	20	79	77	—	—	—	—	11
C 90 4_652.8	652.8	0.70	2.1	2.1	3.5	3.5	4.7	20	79	77	—	—	—	—	11
C 90 4_712.2	712.2	0.70	2.1	2.1	3.5	3.5	4.7	20	79	77	—	—	—	—	11
C 90 4_773.6	773.6	0.50	2.0	2.0	3.4	3.3	4.6	—	—	—	—	—	—	—	9.7
C 90 4_844.0	844.0	0.50	2.0	2.0	3.4	3.3	4.6	—	—	—	—	—	—	—	9.6
C 90 4_922.3	922.3	0.40	1.8	1.8	3.2	3.2	4.5	—	—	—	—	—	—	—	9.5
C 90 4_1006	1006	0.40	1.8	1.8	3.2	3.2	4.5	—	—	—	—	—	—	—	9.4
C 90 4_1137	1137	0.30	1.7	1.7	3.1	3.0	4.3	—	—	—	—	—	—	—	9.3
C 90 4_1240	1240	0.30	1.7	1.7	3.1	3.0	4.3	—	—	—	—	—	—	—	9.3

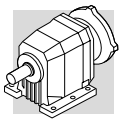

C 100

	i	J (•10-4) [kgm2]													
			IEC												
			63	71	80	90	100 112	132	160	180	200	225	250	280	
C 100 2_4.9	4.9	—	—	—	—	—	—	—	—	—	674	960	987	970	972
C 100 2_5.3	5.3	—	—	—	—	—	—	—	—	—	647	933	960	943	944
C 100 2_6.5	6.5	—	—	—	—	—	—	—	—	—	481	767	794	777	778
C 100 2_7.1	7.1	—	—	—	—	—	—	—	—	—	465	751	778	761	763
C 100 2_8.4	8.4	—	—	—	—	—	—	—	—	—	365	651	678	660	662
C 100 2_9.0	9.0	—	—	—	—	—	—	—	—	—	355	641	668	651	653
C 100 2_10.1	10.1	—	—	—	—	—	—	—	—	—	291	577	604	587	589
C 100 2_10.9	10.9	—	—	—	—	—	—	—	—	—	285	570	597	580	582
C 100 2_12.5	12.5	—	—	—	—	—	—	—	224	222	233	521	550	539	529
C 100 2_13.5	13.5	—	—	—	—	—	—	—	220	218	228	517	545	532	524
C 100 2_15.2	15.2	122	—	—	—	—	—	82	141	200	199	472	499	528	514
C 100 2_16.5	16.5	119	—	—	—	—	—	138	197	195	206	496	525	511	504
C 100 2_18.7	18.7	97	—	—	—	—	—	116	175	173	203	474	501	488	480
C 100 2_20.2	20.2	95	—	—	—	—	—	114	173	171	201	471	499	486	478
C 100 2_22.2	22.2	73	—	—	—	—	—	92	102	150	179	448	477	463	456
C 100 2_24.1	24.1	72	—	—	—	—	—	91	150	148	178	447	476	462	455
C 100 2_29.6	29.6	50	—	—	—	—	54	69	129	127	156	425	454	440	433
C 100 3_34.3	34.3	—	—	—	—	—	—	—	148	146	155	439	465	471	461
C 100 3_36.9	36.9	—	—	—	—	—	—	—	145	143	152	436	462	468	458
C 100 3_42.9	42.9	44	—	—	—	—	—	63	123	120	130	415	441	451	437
C 100 3_46.2	46.2	43	—	—	—	—	—	61	121	118	128	413	439	452	435
C 100 3_53.3	53.3	33	—	—	—	—	—	51	111	109	139	403	429	432	424
C 100 3_57.4	57.4	31	—	—	—	—	—	50	110	107	138	401	427	431	423
C 1003_64.5	64.5	24	—	—	—	—	—	43	103	101	130	394	420	422	415
C 100 3_69.4	69.4	24	—	—	—	—	—	43	102	100	129	393	419	421	414
C 100 3_79.4	79.4	16	—	—	—	—	20	35	95	92	122	385	411	413	407
C 100 3_85.6	85.6	16	—	—	—	—	19	35	94	92	121	385	411	413	406
C 100 3_92.7	92.7	15	—	—	—	—	18	34	93	91	120	384	410	412	405
C 100 3_99.8	99.8	14	—	—	—	—	18	33	93	90	119	383	409	411	404
C 100 3_111.9	111.9	9.9	—	—	—	—	14	29	88	86	—	—	—	—	392
C 100 3_120.5	120.5	9.6	—	—	—	—	14	29	88	86	—	—	—	—	392
C 100 3_139.7	139.7	6.0	—	—	—	—	10	25	84	82	—	—	—	—	388
C 100 3_150.4	150.4	5.8	—	—	—	—	9.8	25	84	82	—	—	—	—	388
C 100 4_162.1	162.1	13	—	—	16	16	17	32	100	89	—	—	—	—	23
C 100 4_185.4	185.4	9.6	—	—	13	12	14	29	88	86	—	—	—	—	20
C 100 4_199.6	199.6	8.5	—	—	12	12	14	28	88	86	—	—	—	—	20
C 100 4_244.2	244.2	5.7	—	—	8.5	8.5	9.8	25	84	82	—	—	—	—	16
C 100 4_263.0	263.0	5.6	—	—	8.5	8.4	9.7	25	84	82	—	—	—	—	16
C 100 4_300.5	300.5	4.2	—	—	7.1	7.1	8.4	23	83	80	—	—	—	—	15
C 100 4_323.6	323.6	4.2	—	—	7.1	7.0	8.3	23	83	80	—	—	—	—	14
C 100 4_380.5	380.5	3.1	4.5	4.5	5.9	5.5	7.1	22	81	79	—	—	—	—	13
C 100 4_409.8	409.8	3.0	4.5	4.5	5.9	5.5	7.1	22	81	79	—	—	—	—	13
C 100 4_466.7	466.7	2.0	3.5	3.5	4.9	4.8	6.1	20	80	78	—	—	—	—	12
C 100 4_502.6	502.6	2.0	3.5	3.4	4.8	4.8	6.1	20	80	78	—	—	—	—	12
C 100 4_582.6	582.6	1.4	2.9	2.9	4.3	4.2	5.5	20	80	77	—	—	—	—	12
C 100 4_627.4	627.4	1.4	2.9	2.9	4.3	4.2	5.5	20	80	77	—	—	—	—	12
C 100 4_720.3	720.3	1.0	2.5	2.5	3.9	3.4	5.1	20	79	77	—	—	—	—	11
C 100 4_775.7	775.7	1.0	2.5	2.5	3.9	3.4	5.1	20	79	77	—	—	—	—	11
C 100 4_843.3	843.3	0.80	2.3	2.3	3.7	3.6	4.9	—	—	—	—	—	—	—	9.9
C 100 4_908.2	908.2	0.80	2.3	2.3	3.7	3.6	4.9	—	—	—	—	—	—	—	9.9
C 100 4_1004	1004	0.60	2.1	2.0	3.4	3.4	4.7	—	—	—	—	—	—	—	9.7
C 100 4_1081	1081	0.60	2.1	2.0	3.4	3.4	4.7	—	—	—	—	—	—	—	9.7

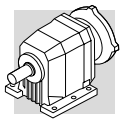

29 EXACT RATIOS

i_N	C12	C22	C32	C36	C41	C51	C61	C70	C80	C90	C100
2.5						2.62895					
2.8	2.76731	2.72212	2.87879	2.68687	2.65909		2.82011				
3.2	3.20743	3.32609		3.18182		3.30758					
3.5	3.65132	3.70709	3.40909	3.48617	3.61111		3.69925				
4.0			3.73518	4.20000							
4.5	4.31203	4.25831	4.50000	4.62201	4.66304	4.45370	4.55556	4.57143			
5.0	4.86842	4.76902	4.95215	5.27807						5.17231	4.92308
5.6	5.59868	5.59006	5.65508	5.84659	5.95263	5.63043		5.85034	5.64103	5.60333	5.33333
6.3	6.23158	6.08696	6.26420		6.36364		6.00176 6.74074	6.25455	6.11111	6.75824	6.52308
7.1		7.08300	7.16498	6.78114	7.06612	6.98684	7.48485	7.46032	7.04000	7.32143	7.06667
8.0	7.62201		8.48485	8.03030		7.75120		8.00433	7.62667	8.32615	8.35165
9.0	8.83422	8.65455	9.29644	8.79842	8.64198	8.79040	8.84211	9.52381	8.86447	9.02000	9.04762
10.0	10.05682	9.64593		10.60000	9.59596	9.75207	9.81818	10.20707	9.60317	10.36264	10.09231
11.2		11.08021	11.20000	11.66507	11.15942	11.83642	10.88889	11.20879	11.09402	11.22619	10.93333
12.5	11.87662	12.40909	12.32536	13.32086	12.39130	13.13131	12.09091	13.03030	12.01852	12.79060	12.45421
14.0	13.40909	14.54545	14.07487	14.75568	14.24561	14.96377	14.34568	14.09524	13.76410 14.91111	13.85648	13.49206
16.0	15.42045	15.83838	15.59091		15.81818	16.60079	15.92929	15.33566 16.70330	16.66272	15.97949	15.21368 16.48148
18.0	17.16364 18.38961	18.13636	18.18182	17.20779	17.79167	18.89035	17.65217		18.05128	17.31111 18.68047	18.66667
20.0	20.62937	20.02424	20.08081	19.00505	19.75568	20.95694 21.81606	19.60079	19.28485	20.53333	20.23718	20.22222
22.4	23.24242	21.45455	22.90909	22.13187	22.55556	23.35417 23.89242	22.35088	22.85315	22.24444	22.91795	22.24852
25.0	25.35537	24.27972	25.11515	26.20879	25.04545	25.90909	24.81818 26.77895		23.95266 25.94872	24.82778	24.10256
28.0	29.50000	27.15152 29.61983	26.90909	28.71572	28.31111 28.49003	27.44759 29.77315	27.41667 29.35385	27.71901		27.17160 29.43590	29.55556
31.5	32.77778	33.09091	29.76224 33.09091		31.22945 31.43636	30.05994 33.03030	30.44318 32.97778		31.33333		
35.5	37.00909	36.76768	36.09917	34.59560	33.38462 36.78930	36.38333 36.95862	34.22222 36.14872	34.74747		35.09848	34.29705 36.93529
40.0	42.31313		40.72727	38.07172	37.06993 40.32673	40.36364 40.47619	38.00000	41.26263	39.11111	39.40239	42.92328
45.0		43.27273	45.25253	43.47576	44.75207 46.96356	43.11538 46.72360	43.44691	44.70118	43.49074	42.98443	46.22507
50.0	47.60227	48.64646	52.43636	48.15865	51.47929	47.83217 51.40152	47.62450	52.16479	47.44444	50.30093	53.25397
56.0	55.16883	54.72727	59.39394	56.16170	58.65385	57.02479 58.98416	53.46087 58.60134	56.51186	57.29733	54.87374 59.20032	57.35043
63.0	66.15152	60.00000 63.27273	66.81818	62.02747	64.29364	64.59803		65.85315	62.50617	64.58217	64.46886
71.0		65.33333 74.81250	74.74747	70.76374	74.35897	72.92219	67.69123 74.20000	71.34091	70.50362	74.44537	69.42801
80.0		82.60000	82.55443	77.57802 83.11931	81.50888	79.86264	83.03333	81.41434	76.91304	81.21313	79.44444
90.0		88.50000	94.18182	91.93238	93.33333	92.96514	91.01731	88.19886	89.27047	88.22009	85.55556 92.67399
100.0		100.15385	103.25118	102.21429	102.30769	101.81319	103.64444	103.79138	97.38596	96.24009	99.80276

2x 3x

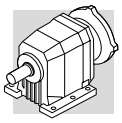

i_N	C12	C22	C32	C36	C41	C51	C61	C70	C80	C90	C100
112.2		112.00000	110.62626	111.50649	110.05917	113.60510	113.61026	112.44066	109.50347	107.00379 116.73140	111.90476
125.5		122.18182	122.35587	125.80220	120.64178	124.41758	128.14222	126.83497	119.45833		120.51282
140.0		136.50000	136.04040 148.40771	139.78022	132.86713 145.64282	134.62559 147.43872	140.46359	137.40455	136.68519 149.11111	134.13580 146.32997	139.68254
160.0		151.66667	167.43434	161.97033	164.10256	160.49861	150.03077 164.45680	150.30339 162.82867	168.99259	157.76199	150.42735 162.10526
180.0		178.50000	186.03816	183.46154	179.88166	175.77423	178.59394	179.18945	184.35556	172.10399	185.37037
200.0		200.66667		206.39423	190.76923 209.11243	197.87075	195.76643	194.12190	197.85897	212.38169	199.62963
225.0		225.75000	215.57172	230.88697		216.70330	217.40754	220.91375	215.84615	231.68911	
250.0		261.00000	244.17508	255.00183	239.94755	240.85197 263.77530	238.31211	239.32323 251.28438	261.85613	268.49591	244.21811 263.00412
280.0			274.69697	290.91758	263.01943		275.27766	272.22475	285.66123	292.90463	300.50725
315.0				318.93187	304.19580 333.44540	297.76563 326.10577	301.74667	317.86109	334.27376	338.95085	323.62319
355.0				341.71272			337.66889 370.13705	344.34951	364.66228	369.76457	380.49708
400.0				377.94421 420.21429	381.81818 418.53147	379.60764 415.73718	421.48741	409.39931	417.48199	419.04541	409.76608
450.0				458.41558	450.24207	463.88750	462.01504	443.51592	455.43490	457.14044	466.73611
500.0				517.18681	493.53457	508.03846	521.11170	512.03745	529.26678		502.63889
560.0				574.65201	543.54736	549.72115	571.21860	554.70724	577.38194	534.22163 582.78723	582.59259
630.0				665.87802	595.81153	602.04142 655.36932	610.12513 668.79101	606.78035 657.34538	664.32106	652.82863	627.40741
710.0				754.23077	671.32867 735.87951	717.74476	726.28202	735.97521	724.71389	712.17669	720.29630
800.0				848.50962	780.41958	807.97222	796.11683	797.30647	783.37099	773.62229 843.95159	775.70370 843.33333
900.0					855.45992	884.87179		922.59000	854.58654 945.71181	922.30089	908.20513
1000.0								999.47250 1069.05117	1031.68561	1006.14643	1003.88889
1125.0								1158.13876	1168.03704	1137.05888	1081.11111
1250.0									1274.22222	1240.42787	
1400.0								1362.26180 1475.78362	1357.84306 1481.28333		

3x 4x

30 DIMENSIONS

C 05...M/ME/MX/MXN

P

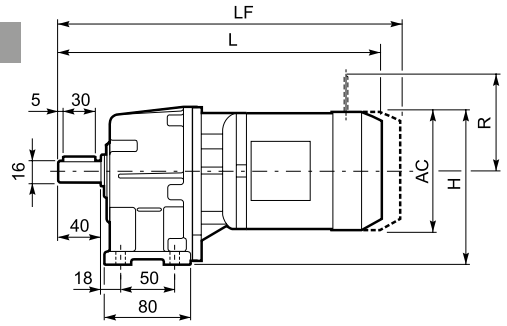

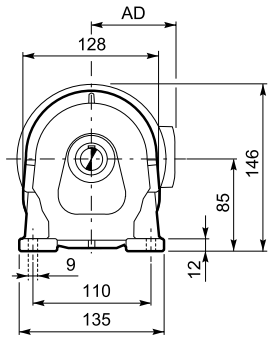

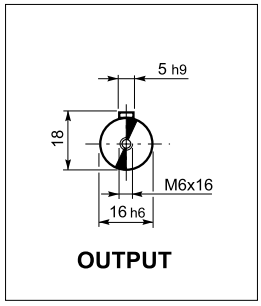

F

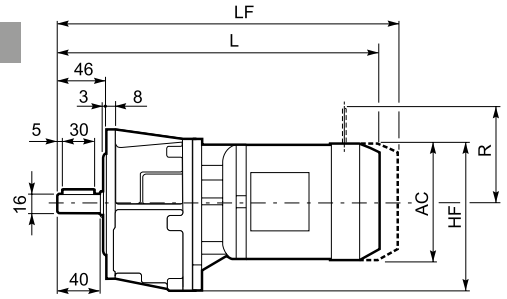

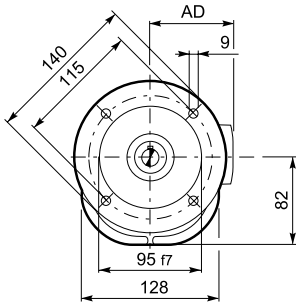

			Gearmotor - Without brake							Gearmotor - With brake								
										M...FD				M...FDD				
			AC	H	HF	L		AD	Kg	LF	Kg	R	AD	LF		Kg	R	AD
						plastic	metal							plastic	metal			
C 05 2	S0	M0	110	140	137	—	287	91	7	—	—	—	—	—	—	—	—	—
	S05	M05	121	145.5	142.5	—	332	95	8	398	10	96	122	—	—	—	—	—
		ME05	121	145.5	142.5	—	332	95	8	398	10	96	119	—	—	—	—	—
		MX05	121	145.5	142.5	—	332	95	8	398	10	96	119	—	—	—	—	—
	SX05	MXN05	122	146.5	142.5	378.5	356.5	136	9.8	—	—	—	—	425.5	391.2	11.1	106	136
	S1	M1	138	154	151	—	360.5	108	11	423	13	103	135	—	—	—	—	—
		ME1	138	154	151	—	360.5	108	11	423	13	103	135	—	—	—	—	—
		MX1	138	154	151	—	360.5	108	11	423	13	103	135	—	—	—	—	—
	SX10	MXN10	138	154	151	389.5	370	138	12.8	—	—	—	—	482	447.1	15.4	106	138

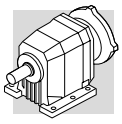

C 12...M/ME/MX/MXN

P

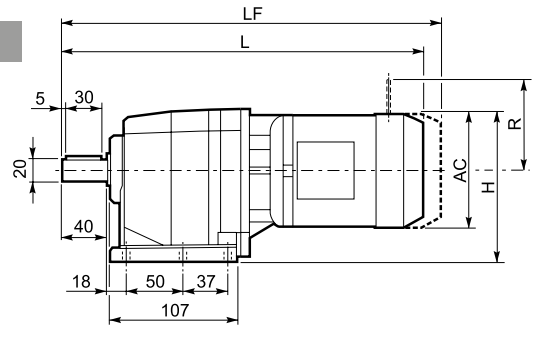

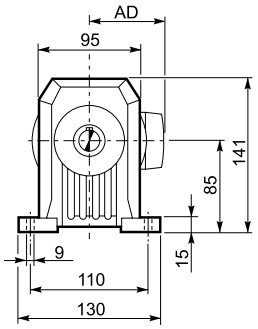

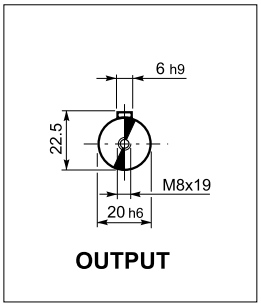

F

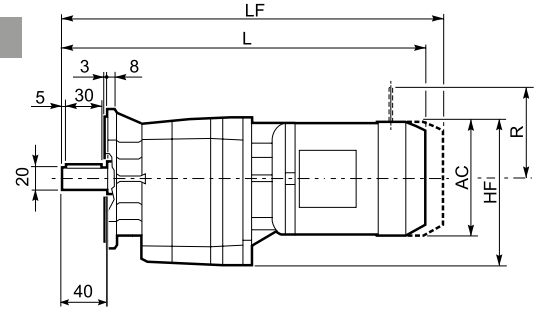

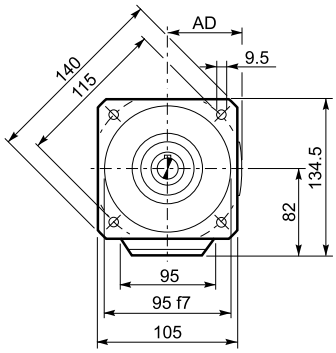

U

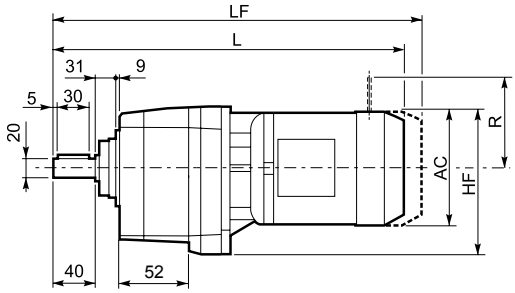

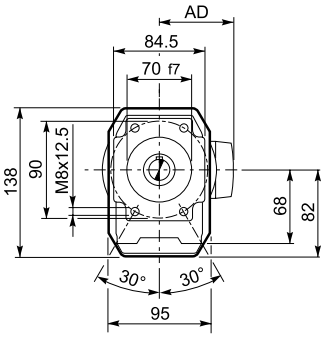

UF

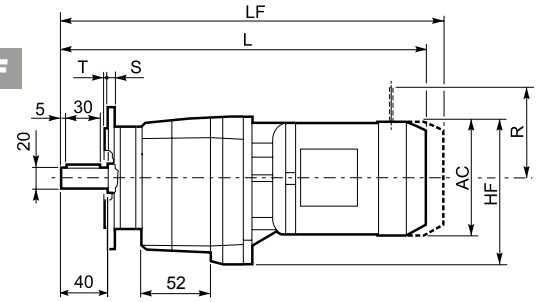

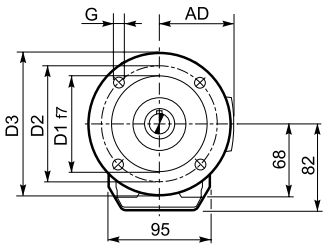

C 12 2_U						
	D1	D2	D3	G	T	S
FA	80	100	120	7	3	8
FB	95	115	140	9	3	10
FC	110	130	160	9	3	10

			Gearmotor - Without brake							Gearmotor - With brake									
										M...FD				M...FDD					
			AC	H	HF	L		AD	Kg	LF	Kg	R	AD	LF		Kg	R	AD
						plastic	metal							plastic	metal			
C 12 2	S05	M05	121	145.5	142.5	—	370.5	95	9	436.5	10	96	122	—	—	—	—	—
		ME05	121	145.5	142.5	—	370.5	95	9	436.5	10	96	122	—	—	—	—	—
		MX05	121	145.5	142.5	—	370.5	95	9	436.5	10	96	122	—	—	—	—	—
	SX05	MXN05	123	146.5	142.5	417	395	122.3	10.8	—	—	—	—	444	409.7	10.8	106	136
	S1	M1	138	154	142.5	—	404.5	108	11	460.5	13	103	135	—	—	—	—	—
		ME1	138	154	142.5	—	404.5	108	11.4	460.5	13	103	135	—	—	—	—	—
		MX1	138	154	142.5	—	404.5	108	11.4	460.5	13	103	135	—	—	—	—	—
	SX10	MXN10	138	154	142.5	433.5	414	123.3	13.8	—	—	—	—	469.5	434.6	13.8	106	138
	S2	M2S	156	163	160	—	428.5	119	15	498.5	18	129	146	—	—	—	—	—
		ME2S	156	163	160	—	428.5	119	18	498.5	21.9	129	143	—	—	—	—	—
		MX2S	156	163	160	—	472.5	119	20.1	544	19.9	129	143	—	—	—	—	—
	SX20	MXN20	158	164	160	526	509.7	132.8	22.3	—	—	—	—	567	528.8	22.3	115	148
	S3	ME3S	195	182.5	179.5	—	471.5	142	21.5	552	24	160	155	—	—	—	—	—
		MX3S	195	182.5	179.5	—	503.5	142	24.5	581	27	160	155	—	—	—	—	—
		ME3L	195	182.5	179.5	—	503.5	142	22	579	28	160	155	—	—	—	—	—
		MX3L	195	182.5	179.5	—	547.5	142	28	623	36	160	155	—	—	—	—	—

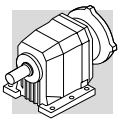

C 12...P (IEC)

P

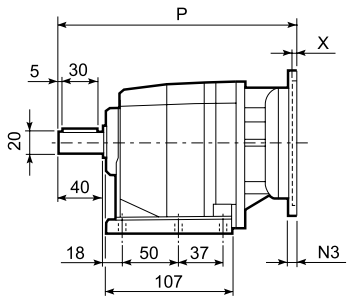

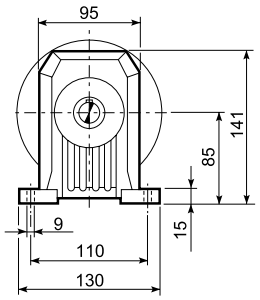

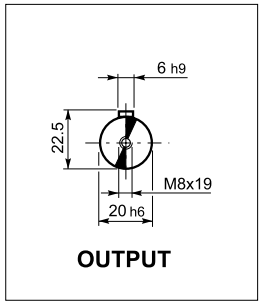

F

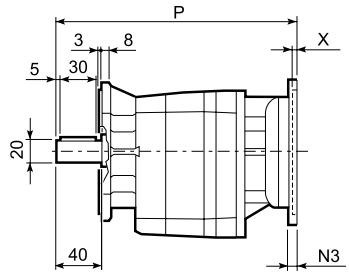

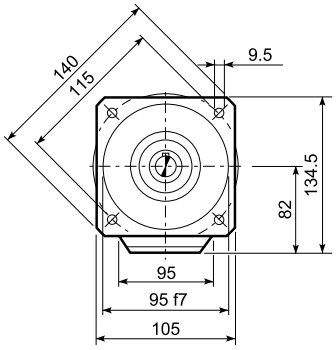

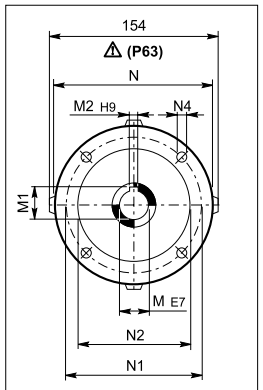

U

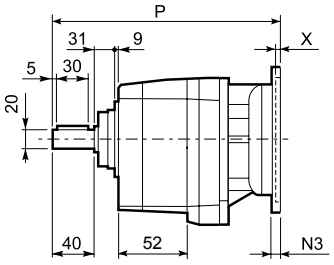

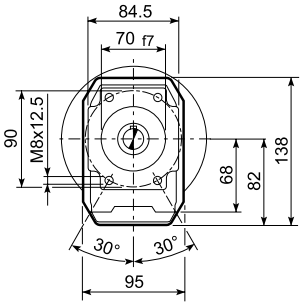

UF

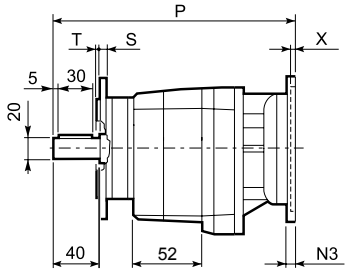

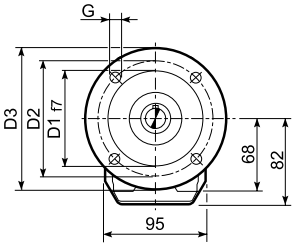

C 12 2_U						
	D1	D2	D3	G	T	S
FA	80	100	120	7	3	8
FB	95	115	140	9	3	10
FC	110	130	160	9	3	10

		M	M1	M2	N	N1	N2	N3	N4	X	P	kg
C 12 2	P63	11	12.8	4	140	115	95	—	M8x19	4	244.5	6
C 12 2	P71	14	16.3	5	160	130	110	—	M8x16	4.5	244.5	6
C 12 2	P80	19	21.8	6	200	165	130	—	M10x14.5	4	264	7
C 12 2	P90	24	27.3	8	200	165	130	—	M10x14.5	4	264	7
C 12 2	P100	28	31.3	8	250	215	180	—	M12x16	4.5	274	11
C 12 2	P112	28	31.3	8	250	215	180	—	M12x16	4.5	274	11

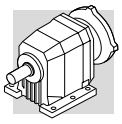

C 12...SK / SC

P

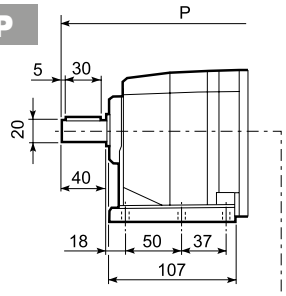

F

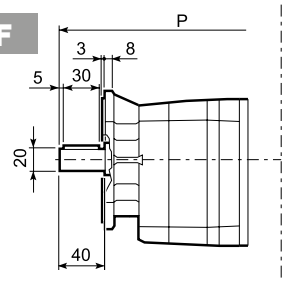

U

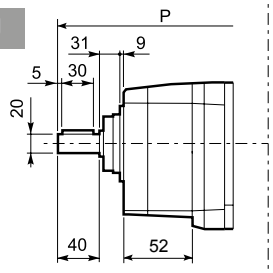

UF

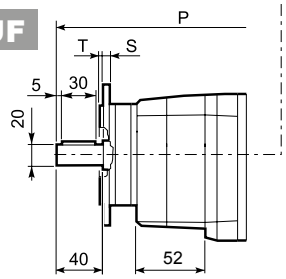

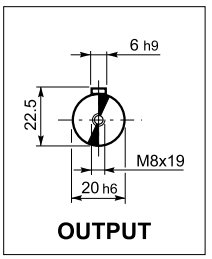

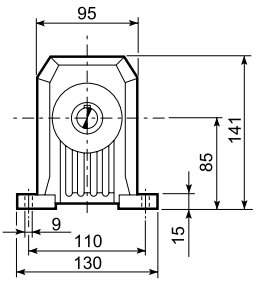

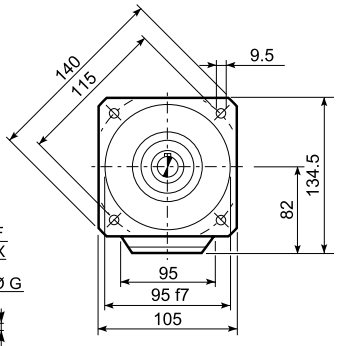

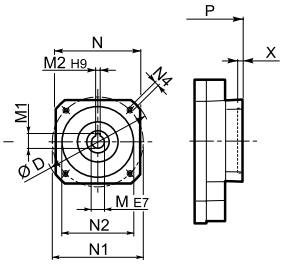

SK...

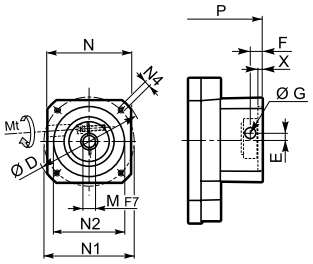

SC...

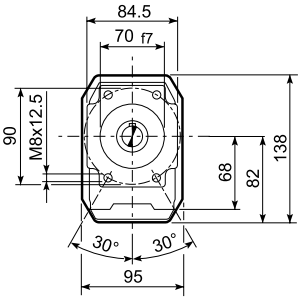

C 12 2_U						
	D1	D2	D3	G	T	S
FA	80	100	120	7	3	8
FB	95	115	140	9	3	10
FC	110	130	160	9	3	10

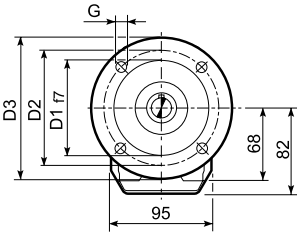

		D	M	M1	M2	N	N1	N2	N4	X	P	Kg
C 12 2	SK60A	102	11	12.8	4	82	75	60	M5x10	3.5	216	6
C 12 2	SK60B	102	14	16.3	5	82	75	60	M5x10	4	223	5
C 12 2	SK80A	115	14	16.3	5	90	100	80	M6x12	4	223	5
C 12 2	SK80C	120	19	21.8	6	96	100	80	M6x12	4	264	7
C 12 2	SK95A	130	14	16.3	5	102	115	95	M8x12	4	264	6
C 12 2	SK95B	130	19	21.8	6	102	115	95	M8x12	4	264	7
C 12 2	SK95C	130	24	27.3	8	102	115	95	M8x12	4	264	7
C 12 2	SK110A	150	19	21.8	6	120	130	110	M8x12	5	264	7
C 12 2	SK110B	150	24	27.3	8	120	130	110	M8x12	5	264	7

			Mt [Nm]	D	E	F	G	M	N	N1	N2	N4	X	P	Kg
C 12 2	SC60A	M6	15	102	7	12.5	12.5	11	82	75	60	M5x10	4	243	7
C 12 2	SC60B	M6	15	102	7	12.5	12.5	14	82	75	60	M5x10	4	243	6
C 12 2	SC80A	M6	15	115	6	12.5	12.5	14	90	100	80	M6x12	4	243	6
C 12 2	SC80C	M6	15	120	15.5	14.5	17.75	19	96	100	80	M6x12	4	287.5	8
C 12 2	SC95A	M6	15	130	16.5	15	17.75	14	102	115	95	M8x16	4	287.5	7
C 12 2	SC95B	M6	15	130	16.5	15	17.75	19	102	115	95	M8x16	4	287.5	8
C 12 2	SC95C	M6	15	130	16.5	15	17.75	24	102	115	95	M8x16	4	287.5	8
C 12 2	SC110A	M6	15	150	16.5	16	17.75	19	120	130	110	M8x16	5	287.5	10
C 12 2	SC110B	M6	15	150	16.5	16	17.75	24	120	130	110	M8x16	5	287.5	10

C 12...HS

P

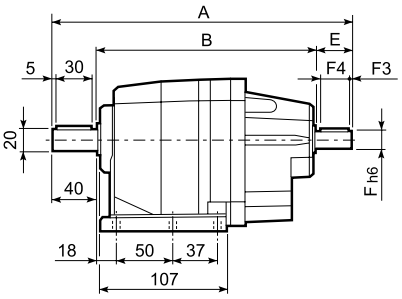

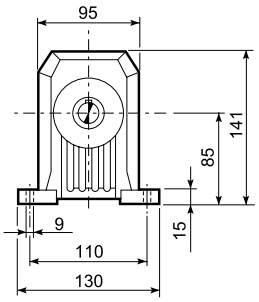

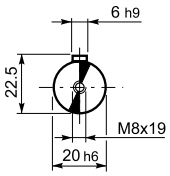

OUTPUT

F

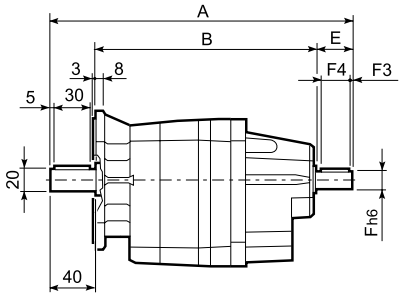

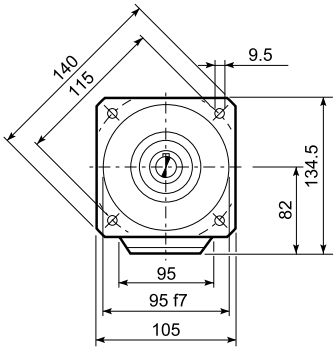

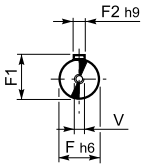

INPUT

U

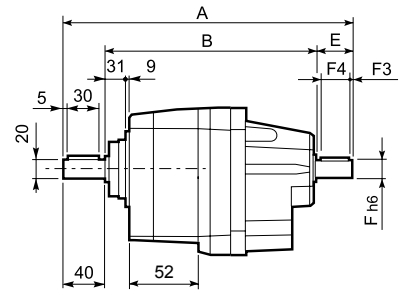

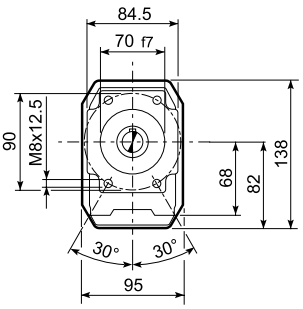

UF

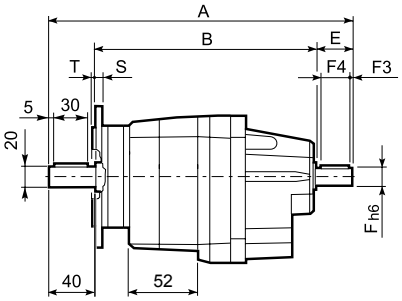

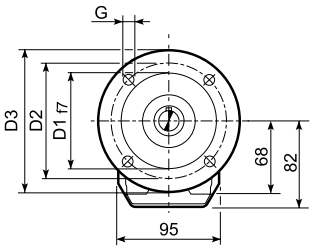

C 12 2_U

	D1	D2	D3	G	T	S
FA	80	100	120	7	3	8
FB	95	115	140	9	3	10
FC	110	130	160	9	3	10

		A	B	E	F	F1	F2	F3	F4	V	Kg
C 12 2	**HS**	251.5	171.5	40	16	18	5	2.5	35	M6x16	7.8

C 22...M/ME/MX/MXN

P

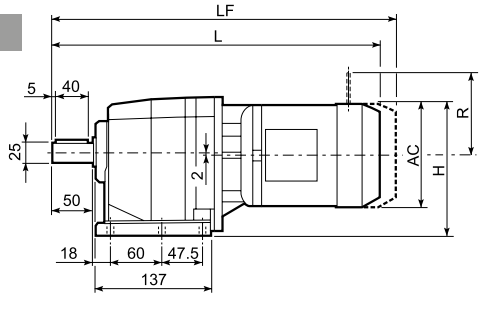

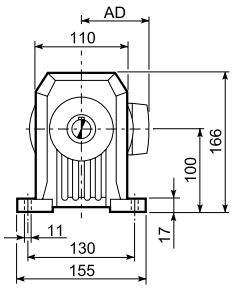

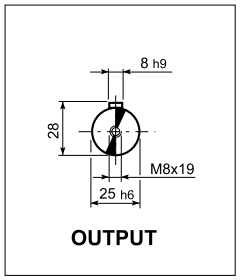

F

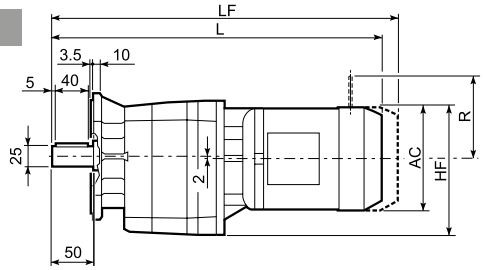

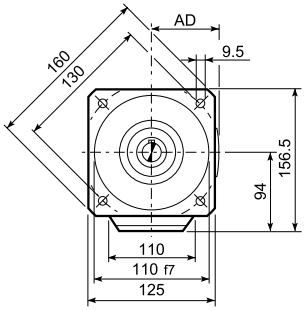

U

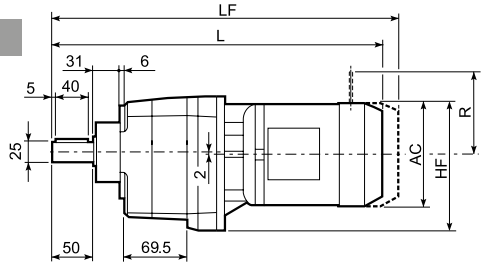

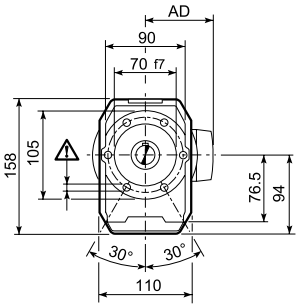

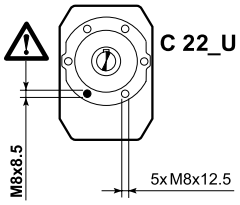

UF

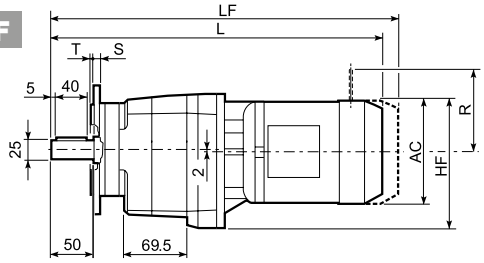

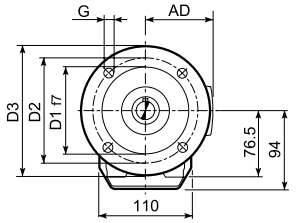

C 22_U

	D1	D2	D3	G	T	S
FA	95	115	140	9	3	10
FB	110	130	160	9	3	10
FC	130	165	200	11	3.5	11

			Gearmotor - Without brake							Gearmotor - With brake								
										M...FD				M...FDD				
			AC	H	HF	L plastic	L metal	AD	kg	LF	kg	R	AD	LF plastic	LF metal	kg	R	AD
C 22 2	S05	M05	121	160.5	154.5	—	399	95	8	465	10	96	119	—	—	—	—	—
		ME05	121	160.5	154.5	—	399	95	8	465	10	96	119	—	—	—	—	—
		MX05	121	160.5	154.5	—	399	95	8	465	10	96	119	—	—	—	—	—
	SX05	MXN05	123	161.5	154.5	445.5	423.5	122.3	9.8	—	—	—	—	472.5	438.2	10.9	106	136
	S1	M1	138	169	163	—	428	108	11	489	14	103	135	—	—	—	—	—
		ME1	138	169	163	—	428	108	11.4	489	14	103	135	—	—	—	—	—
		MX1	138	169	163	—	428	108	11.4	489	14	103	135	—	—	—	—	—
	SX10	MXN10	138	169	163	457	437.5	123.3	13.8	—	—	—	—	493	458.1	16.2	106	138
	S2	M2S	156	178	170	—	456	119	16	527	19	129	146	—	—	—	—	—
		ME2S	156	178	170	—	456	119	17.6	527	20.6	129	143	—	—	—	—	—
		MX2S	156	178	170	—	500	119	21.1	572	24.4	129	143	—	—	—	—	—
	SX20	MXN20	158	179	170	553.5	537.2	132.8	23.3	—	—	—	—	582.6	543.1	25.5	115	148
	S3	ME3S	195	197.5	191.5	—	500	142	22.5	596	22.1	160	155	—	—	—	—	—
		MX3S	195	197.5	191.5	—	532	142	25.5	622	25.1	160	155	—	—	—	—	—
		ME3L	195	197.5	191.5	—	532	142	27	623	26.1	160	155	—	—	—	—	—
		MX3L	195	197.5	191.5	—	576	142	33	668	34	160	155	—	—	—	—	—
C 22 3	S05	M05	121	160.5	154.5	—	454.5	95	11	520.5	12	96	122	—	—	—	—	—
		ME05	121	160.5	154.5	—	454.5	95	11	527.5	12	96	119	—	—	—	—	—
		MX05	121	160.5	154.5	—	454.5	95	11	527.5	12	96	119	—	—	—	—	—
	SX05	MXN05	123	161.5	154.5	501	479	122.3	12.8	—	—	—	—	528	493.7	13.9	106	136
	S1	M1	138	169	163	—	483.5	108	13	544.5	15	103	135	—	—	—	—	—
		ME1	138	169	163	—	483.5	108	13	544.5	15	103	135	—	—	—	—	—
		MX1	138	169	163	—	483.5	108	13	544.5	15	103	135	—	—	—	—	—
	SX10	MXN10	138	169	163	512.5	493	123.3	15.4	—	—	—	—	548.5	513.6	17.8	106	138
	S2	ME2S	156	178	170	—	511.5	119	18	581.5	20.3	129	143	—	—	—	—	—
		MX2S	156	178	170	—	555.5	119	23.1	627.5	24.1	129	143	—	—	—	—	—
	SX20	MXN20	156	178	170	609	592.7	132.8	25.3	—	—	—	—	650	611.8	27.5	115	148
	S3	ME3S	195	197.5	191.5	—	555.5	142	24.5	651.5	25.1	160	155	—	—	—	—	—
		MX3S	195	197.5	191.5	—	587.5	142	27.5	677.5	28.1	160	155	—	—	—	—	—
		ME3L	195	197.5	191.5	—	587.5	142	29	678.5	29.1	160	155	—	—	—	—	—
		MX3L	195	197.5	191.5	—	631.5	142	35	723.5	37	160	155	—	—	—	—	—

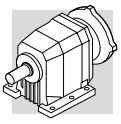

C 22...P(IEC)

P

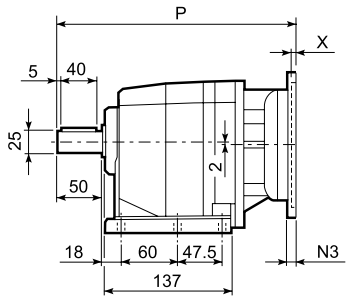

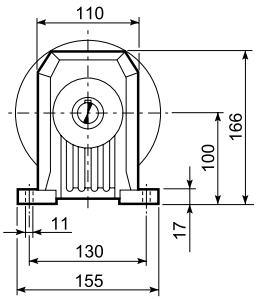

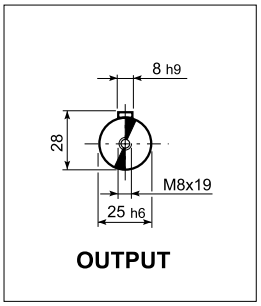

F

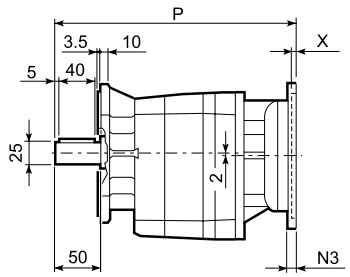

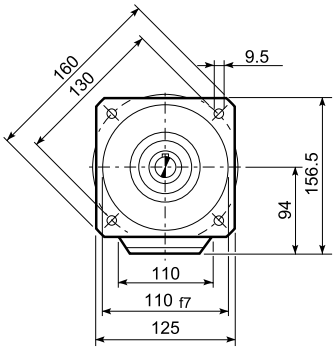

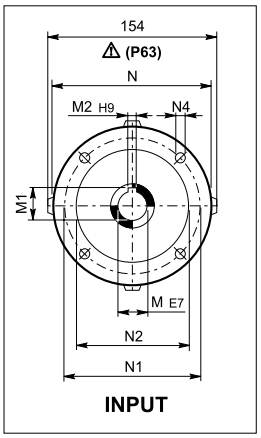

U

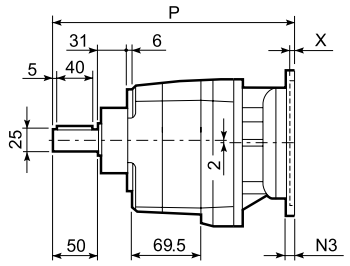

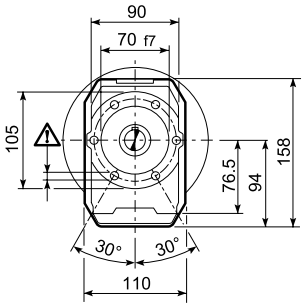

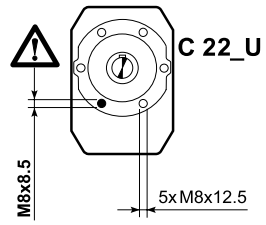

UF

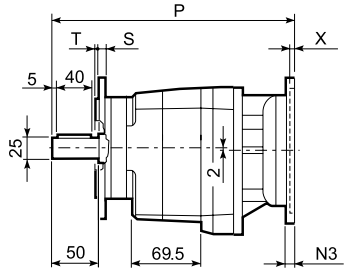

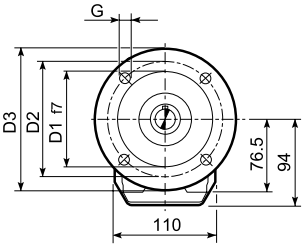

C 22_U						
	D1	D2	D3	G	T	S
FA	95	115	140	9	3	10
FB	110	130	160	9	3	10
FC	130	165	200	11	3.5	11

		M	M1	M2	N	N1	N2	N3	N4	X	P	kg
C 22 2	P63	11	12.8	4	140	115	95	—	M8x19	4	273	7
C 22 2	P71	14	16.3	5	160	130	110	—	M8x16	4.5	273	7
C 22 2	P80	19	21.8	6	200	165	130	—	M10x14.5	4	292.5	8
C 22 2	P90	24	27.3	8	200	165	130	—	M10x14.5	4	292.5	8
C 22 2	P100	28	31.3	8	250	215	180	—	M12X16	4.5	302.5	12
C 22 2	P112	28	31.3	8	250	215	180	—	M12X16	4.5	302.5	12
C 22 3	P63	11	12.8	4	140	115	95	—	M8x19	4	328.5	8
C 22 3	P71	14	16.3	5	160	130	110	—	M8x16	4.5	328.5	8
C 22 3	P80	19	21.8	6	200	165	130	—	M10x14.5	4	348	9
C 22 3	P90	24	27.3	8	200	165	130	—	M10x14.5	4	348	9
C 22 3	P100	28	31.3	8	250	215	180	—	M12x16	4.5	358	13
C 22 3	P112	28	31.3	8	250	215	180	—	M12x16	4.5	358	13

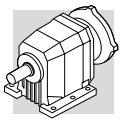

C 22...SK / SC

P

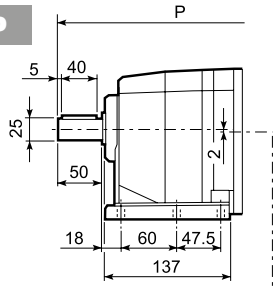

F

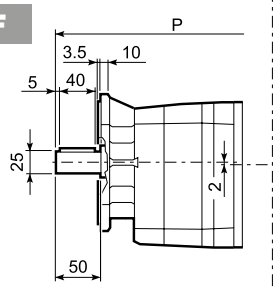

U

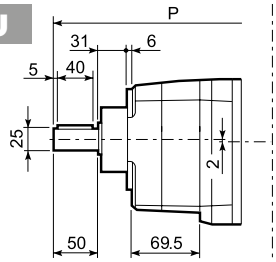

UF

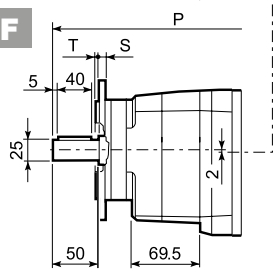

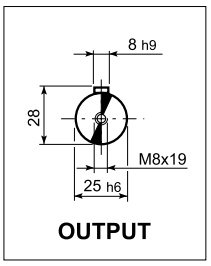

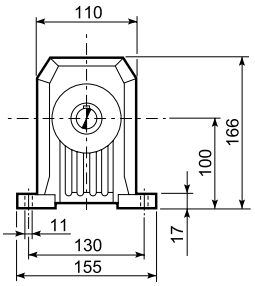

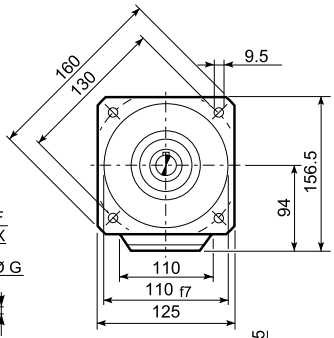

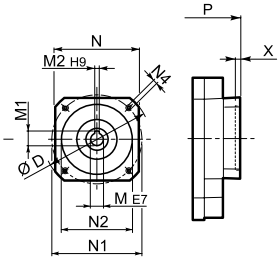

SK...

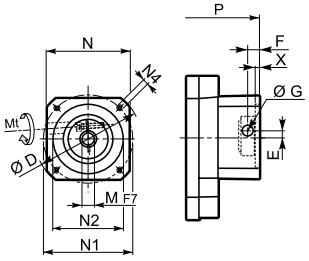

SC...

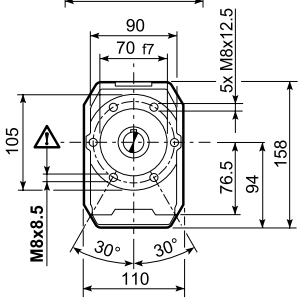

C 22_U						
	D1	D2	D3	G	T	S
FA	95	115	140	9	3	10
FB	110	130	160	9	3	10
FC	130	165	200	11	3.5	11

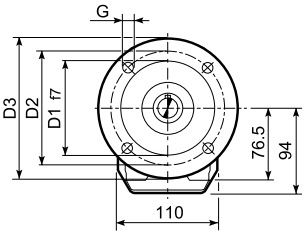

		D	M	M1	M2	N	N1	N2	N4	X	P 2x	P 3x	Kg
C 22 2/3	SK60A*	102	11	12.8	4	82	75	60	M5x10	3.5	224.5	300	6/9
C 22 2/3	SK60B*	102	14	16.3	5	82	75	60	M5x10	4	251.5	307	7/8
C 22 2/3	SK80A*	115	14	16.3	5	90	100	80	M6x12	4	251.5	307	7/8
C 22 2/3	SK80C	120	19	21.8	6	96	100	80	M6x12	4	292.5	348	8/9
C 22 2/3	SK95A	130	14	16.3	5	102	115	95	M8x12	4	292.5	348	8/9
C 22 2/3	SK95B	130	19	21.8	6	102	115	95	M8x12	4	292.5	348	8/9
C 22 2/3	SK95C	130	24	27.3	8	102	115	95	M8x12	4	292.5	348	8/9
C 22 2/3	SK110A	150	19	21.8	6	120	130	110	M8x12	5	292.5	348	8/9
C 22 2/3	SK110B	150	24	27.3	8	120	130	110	M8x12	5	292.5	348	8/9

			Mt [Nm]	D	E	F	G	M	N	N1	N2	N4	X	P 2x	P 3x	Kg
C 22 2/3	SC60A*	M6	15	102	7	12.5	12.5	11	82	75	60	M5x10	4	271.5	327	7/8
C 22 2/3	SC60B*	M6	15	102	7	12.5	12.5	14	82	75	60	M5x10	4	271.5	327	8/9
C 22 2/3	SC80A*	M6	15	115	6	12.5	12.5	14	90	100	80	M6x12	4	271.5	327	8/9
C 22 2/3	SC80C	M6	15	120	15.5	14.5	17.75	19	96	100	80	M6x12	4	316	371.5	9/10
C 22 2/3	SC95A	M6	15	130	16.5	15	17.75	14	102	115	95	M8x16	4	316	371.5	9/10
C 22 2/3	SC95B	M6	15	130	16.5	15	17.75	19	102	115	95	M8x16	4	316	371.5	9/10
C 22 2/3	SC95C	M6	15	130	16.5	15	17.75	24	102	115	95	M8x16	4	316	371.5	9/10
C 22 2/3	SC110A	M6	15	150	16.5	16	17.75	19	120	130	110	M8x16	5	316	371.5	10/11
C 22 2/3	SC110B	M6	15	150	16.5	16	17.75	24	120	130	110	M8x16	5	316	371.5	10/11

* Contact our technical service department advising application data

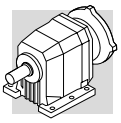

C 22...HS

P

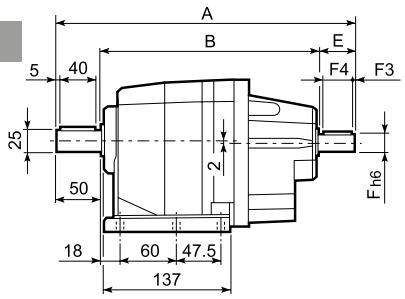

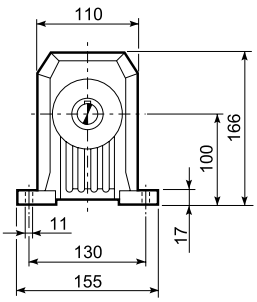

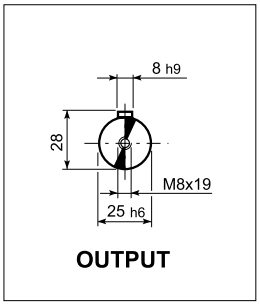

F

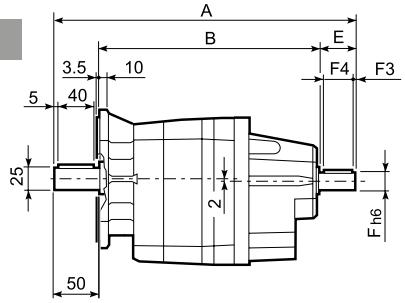

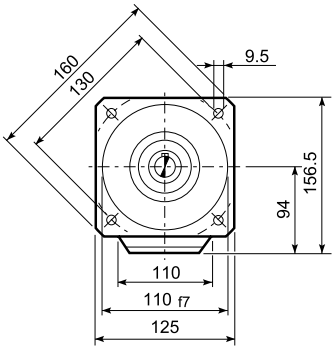

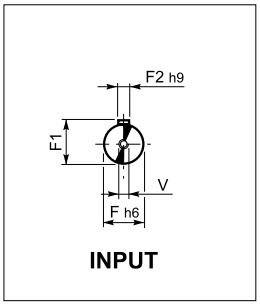

U

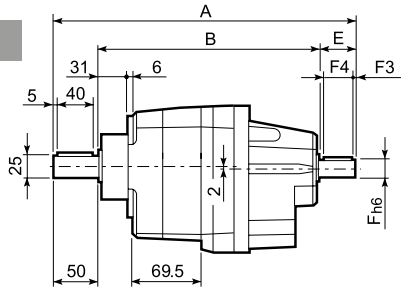

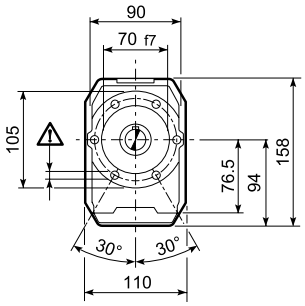

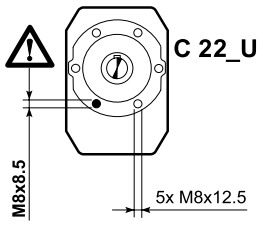

UF

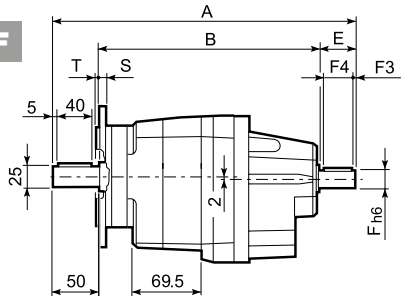

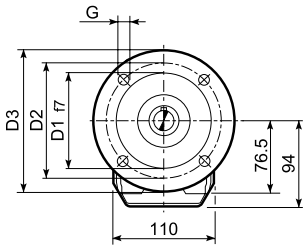

C 22_U

	D1	D2	D3	G	T	S
FA	95	115	140	9	3	10
FB	110	130	160	9	3	10
FC	130	165	200	11	3.5	11

		A	B	E	F	F1	F2	F3	F4	V	Kg
C 22 2	**HS**	323	233	40	19	21.5	6	2.5	35	M6x16	7.2
C 22 3		335.5	245.5	40	16	18	6	2.5	36	M6x16	7.5

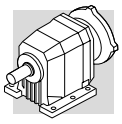

C 32...M/ME/MX/MXN

P

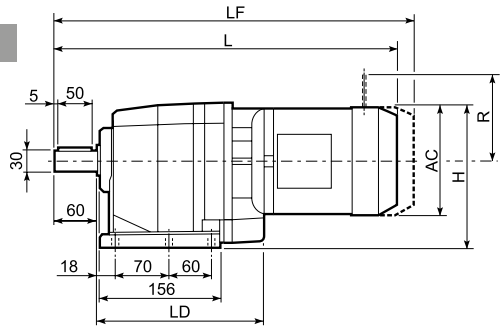

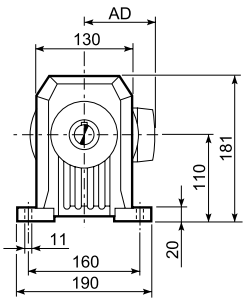

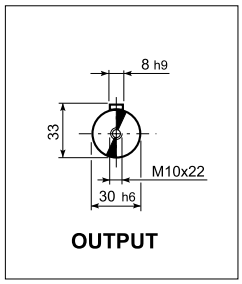

F

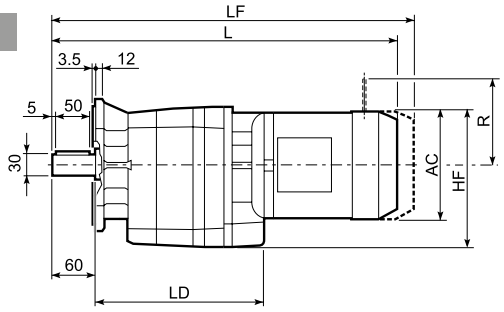

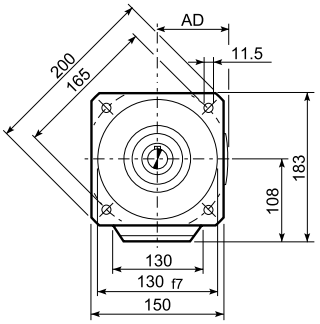

U

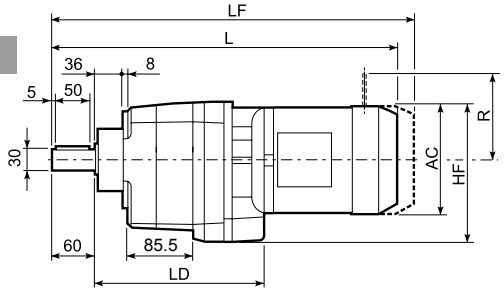

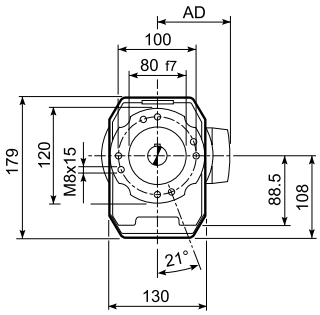

UF

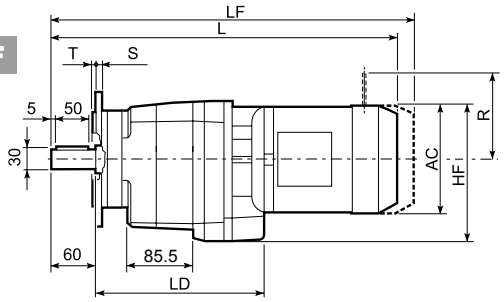

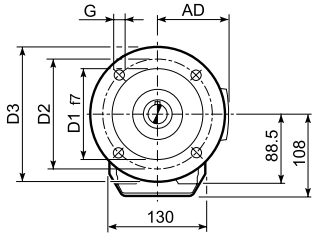

C 32_U						
	D1	D2	D3	G	T	S
FA	110	130	160	9	3	10
FB	130	165	200	11	3.5	11
FC	180	215	250	14	4	13

				Gearmotor - Without brake								Gearmotor - With brake								
							L					M...FD				M...FDD				
				AC	H	HF	plastic	metal	LD	AD	kg	LF	kg	R	AD	LF plastic	LF metal	kg	R	AD
C 32 2	S1	M1		138	179	177	—	462.5	205.5	108	14	523.5	16	103	135	—	—	—	—	—
		ME1		138	179	177	—	462.5	205.5	108	14	523.5	16	103	135	—	—	—	—	—
		MX1		138	179	177	—	462.5	205.5	108	14	523.5	16	103	135	—	—	—	—	—
	SX1	MXN10		138	179	177	491	471.5	205.5	123.3	15.8	—	—	—	—	527	492.1	16.9	106	138
	S2	M2S		156	188	186	—	490.5	217.5	119	18	561.5	21	129	146	—	—	—	—	—
		ME2S		156	188	186	—	490.5	217.5	119	19.6	560.5	23.2	129	143	—	—	—	—	—
		MX2S		156	188	186	—	534.5	217.5	119	23.1	606.5	27	129	143	—	—	—	—	—
	S3	ME3S		195	207.5	205.5	—	534.5	227.5	142	24.5	630.5	31	160	155	—	—	—	—	—
		ME3L	MX3S	195	207.5	205.5	—	566.5	227.5	142	32	656.5	35	160	155	—	—	—	—	—
		MX3L		195	207.5	205.5	—	610.5	227.5	142	38	702.5	36	160	155	—	—	—	—	—
	S4	ME4	MX4	258	239	237	—	674.5	—	193	66	783.5	65	204	210	—	—	—	—	—
		ME4LB	MX4LA	258	239	237	—	709.5	—	193	74	807.5	87	226	210	—	—	—	—	—
C 32 3	S05	M05		121	170.5	168.5	—	491	—	95	13	557	15	96	122	—	—	—	—	—
		ME05		121	170.5	168.5	—	491	—	95	13	557	15	96	119	—	—	—	—	—
		MX05		121	170.5	168.5	—	491	—	95	13	557	15	96	119	—	—	—	—	—
	SX05	MXN05		123	171.5	168.5	537.5	515.5	—	122.3	14.8	—	—	—	—	564.5	530.2	15.9	106	136
	S1	M1		138	179	177	—	520	—	108	15	581	17	103	135	—	—	—	—	—
		ME1		138	179	177	—	520	—	108	15	581	17	103	135	—	—	—	—	—
		MX1		138	179	177	—	520	—	108	15	581	17	103	135	—	—	—	—	—
	SX10	MXN10		138	179	177	549	529.5	—	123.3	17.4	—	—	—	—	585	550.1	19.8	106	138
	S2	ME2S		156	188	186	—	548	—	119	18	618	26.2	129	143	—	—	—	—	—
		MX2S		156	188	186	—	592	—	119	23.1	664	30	129	143	—	—	—	—	—
	SX20	MXN20		158	189	186	645.5	629.2	—	132.8	25.3	—	—	—	—	686.5	648.3	27.5	115	148
	S3	ME3S		195	207.5	205.5	—	592	—	142	25.5	688	34	160	155	—	—	—	—	—
		ME3L	MX3S	195	207.5	205.5	—	624	—	142	33	714	38	160	155	—	—	—	—	—
		MX3L		195	207.5	205.5	—	668	—	142	39	760	46	160	155	—	—	—	—	—

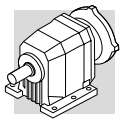

C 32...P(IEC)

P

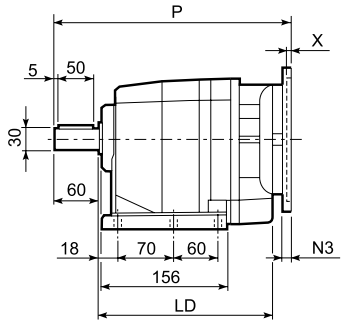

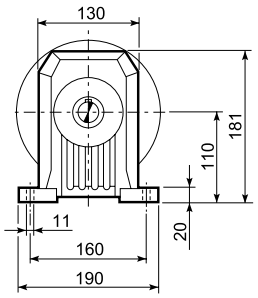

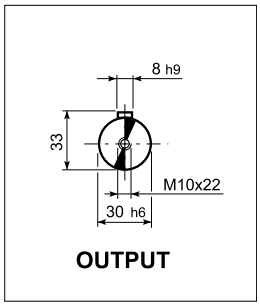

F

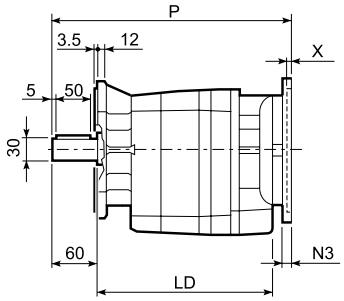

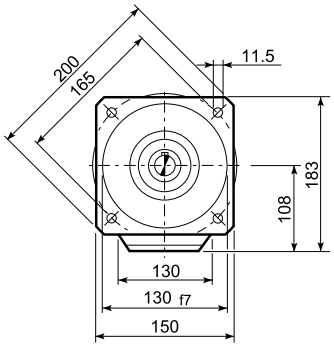

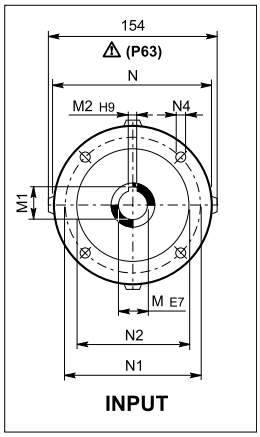

U

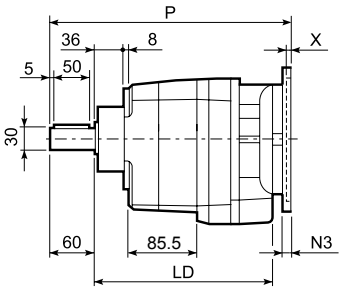

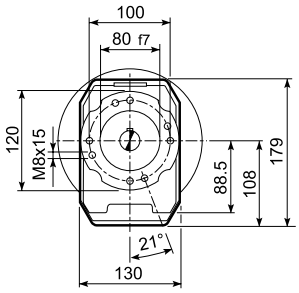

UF

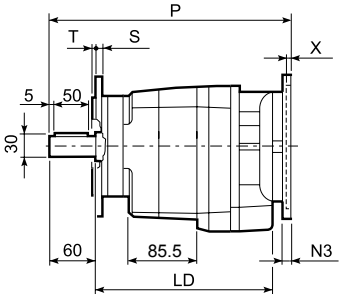

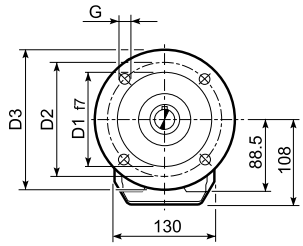

C 32_U						
	D1	D2	D3	G	T	S
FA	110	130	160	9	3	10
FB	130	165	200	11	3.5	11
FC	180	215	250	14	4	13

		LD	M	M1	M2	N	N1	N2	N3	N4	X	P	Kg
C 32 2	**P63**	217.5	11	12.8	4	140	115	95	—	M8x19	4	307.5	9
C 32 2	**P71**	217.5	14	16.3	5	160	130	110	—	M8x16	4.5	307.5	9
C 32 2	**P80**	227.5	19	21.8	6	200	165	130	—	M10x14.5	4	327	10
C 32 2	**P90**	227.5	24	27.3	8	200	165	130	—	M10x14.5	4	327	10
C 32 2	**P100**	227.5	28	31.3	8	250	215	180	—	M12x16	4.5	337	14
C 32 2	**P112**	227.5	28	31.3	8	250	215	180	—	M12x16	4.5	337	14
C 32 2	**P132**	—	38	41.3	10	300	265	230	16	14	5	373	17
C 32 3	**P63**	—	11	12.8	4	140	115	95	—	M8x19	4	365	10
C 32 3	**P71**	—	14	16.3	5	160	130	110	—	M8x16	4.5	365	10
C 32 3	**P80**	—	19	21.8	6	200	165	130	—	M10x14.5	4	384.5	11
C 32 3	**P90**	—	24	27.3	8	200	165	130	—	M10x14.5	4	384.5	11
C 32 3	**P100**	—	28	31.3	8	250	215	180	—	M12x16	4.5	394.5	15
C 32 3	**P112**	—	28	31.3	8	250	215	180	—	M12x16	4.5	394.5	15

C 32...SK / SC

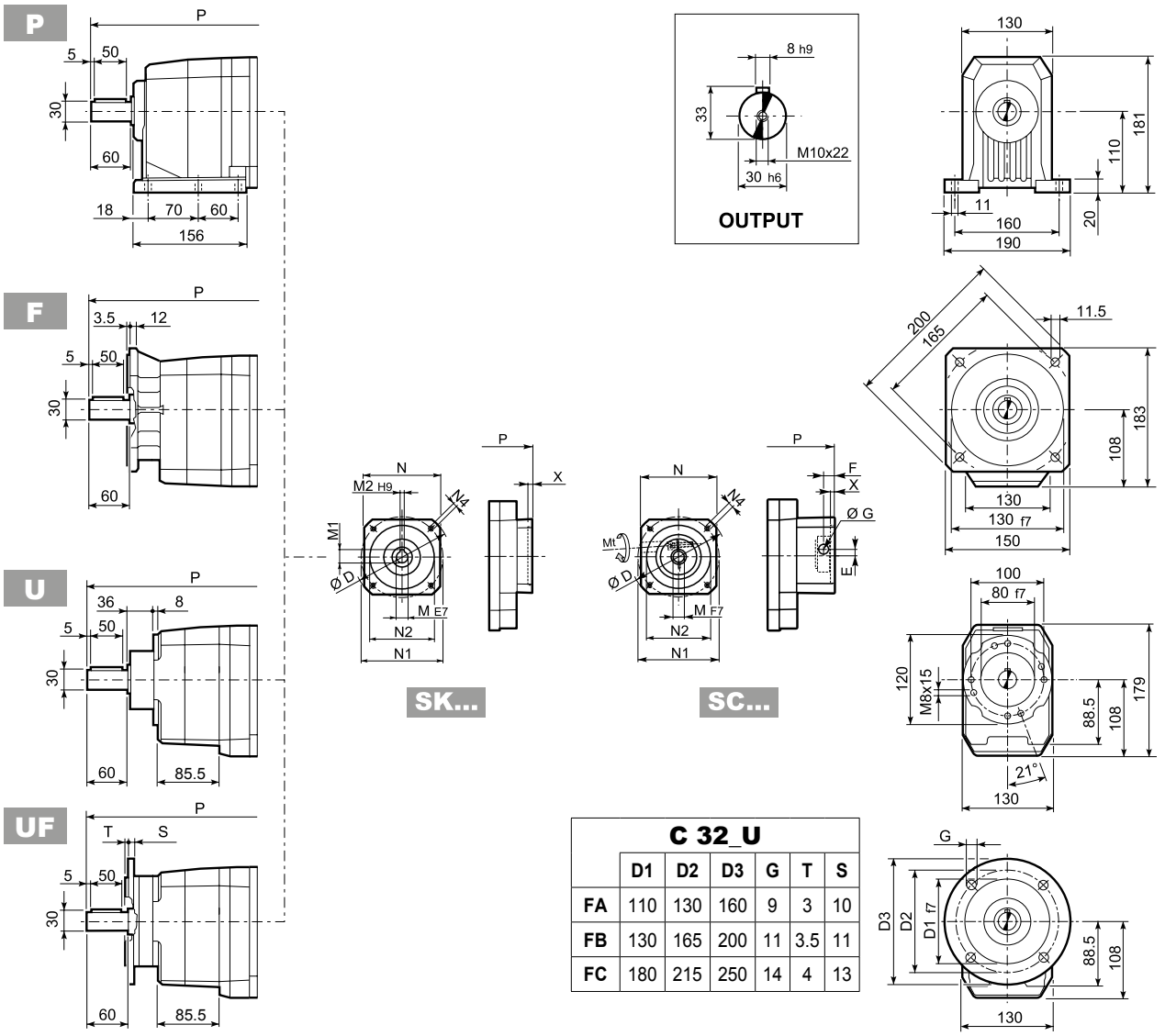

C 32_U	D1	D2	D3	G	T	S
FA	110	130	160	9	3	10
FB	130	165	200	11	3.5	11
FC	180	215	250	14	4	13

		D	M	M1	M2	N	N1	N2	N4	X	P 2x	P 3x	Kg
C 32 2/3	SK60A	102	11	12.8	4	82	75	60	M5x10	3.5	279	336.5	8/9
C 32 2/3	SK60B	102	14	16.3	5	82	75	60	M5x10	4	286	343.5	9/10
C 32 2/3	SK80A	115	14	16.3	5	90	100	80	M6x12	4	286	343.5	9/10
C 32 2/3	SK80C	120	19	21.8	6	96	100	80	M6x12	4	327	384.5	10/11
C 32 2/3	SK95A	130	14	16.3	5	102	115	95	M8x12	4	327	384.5	10/11
C 32 2/3	SK95B	130	19	21.8	6	102	115	95	M8x12	4	327	384.5	10/11
C 32 2/3	SK95C	130	24	27.3	8	102	115	95	M8x12	4	327	384.5	10/11
C 32 2/3	SK110A	150	19	21.8	6	120	130	110	M8x12	5	327	384.5	10/11
C 32 2/3	SK110B	150	24	27.3	8	120	130	110	M8x12	5	327	384.5	10/11
C 32 2	SK130A	188	24	27.3	8	142	165	130	M10x20	5	327	—	11

			Mt [Nm]	D	E	F	G	M	N	N1	N2	N4	X	P 2x	P 3x	Kg
C 32 2/3	SC60A	M6	15	102	7	12.5	12.5	11	82	75	60	M5x10	4	306	363.5	9/10
C 32 2/3	SC60B	M6	15	102	7	12.5	12.5	14	82	75	60	M5x10	4	306	363.5	10/11
C 32 2/3	SC80A	M6	15	115	6	12.5	12.5	14	90	100	80	M6x12	4	306	363.5	10/11
C 32 2/3	SC80C	M6	15	120	15.5	14.5	17.75	19	96	100	80	M6x12	4	350.5	408	11/12
C 32 2/3	SC95A	M6	15	130	16.5	15	17.75	14	102	115	95	M8x16	4	350.5	408	11/12
C 32 2/3	SC95B	M6	15	130	16.5	15	17.75	19	102	115	95	M8x16	4	350.5	408	11/12
C 32 2/3	SC95C	M6	15	130	16.5	15	17.75	24	102	115	95	M8x16	4	350.5	408	11/12
C 32 2/3	SC 110A	M6	15	150	16.5	16	17.75	19	120	130	110	M8x16	5	350.5	408	12/13
C 32 2/3	SC 110B	M6	15	150	16.5	16	17.75	24	120	130	110	M8x16	5	350.5	408	12/13
C 32 2	SC 130A	M6	15	188	19	16	17.75	24	142	165	130	M10x20	5	350.5	—	13

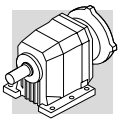

C 32...HS

P

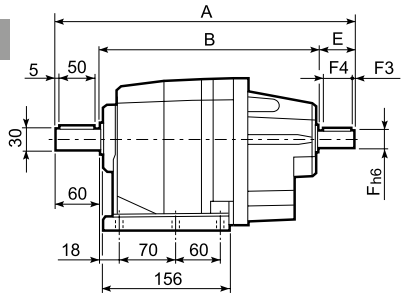

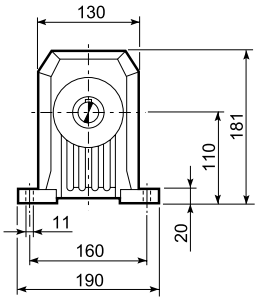

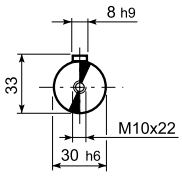

OUTPUT

F

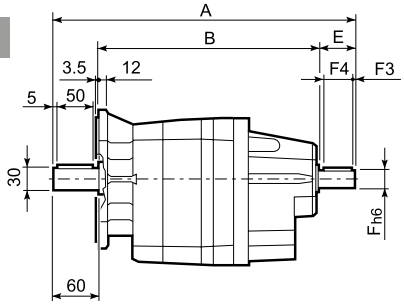

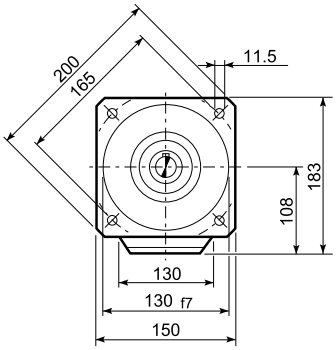

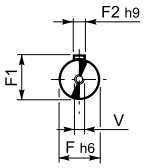

INPUT

U

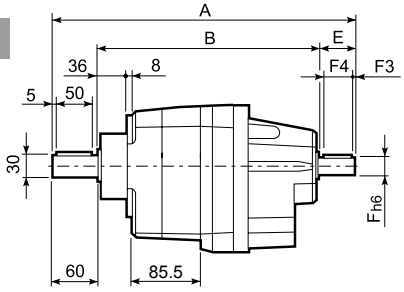

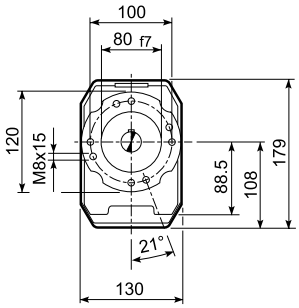

UF

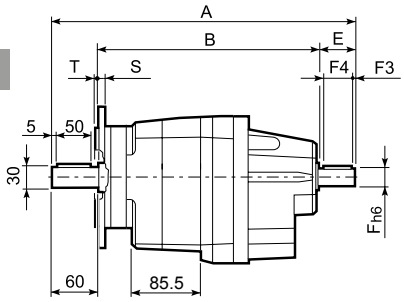

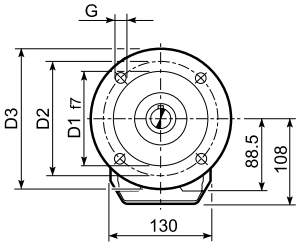

C 32_U						
	D1	D2	D3	G	T	S
FA	110	130	160	9	3	10
FB	130	165	200	11	3.5	11
FC	180	215	250	14	4	13

		A	B	E	F	F1	F2	F3	F4	V	Kg
C 32 2	HS	357.5	257.5	40	19	21.5	6	2.5	35	M6x16	11.1
C 32 3		372	272	40	16	18	5	2.5	35	M6x16	10.6

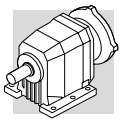

C 36...M/ME/MX/MXN

P

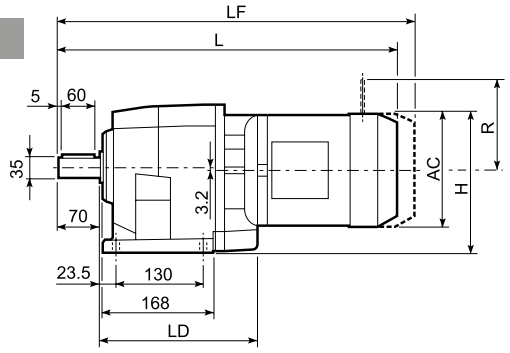

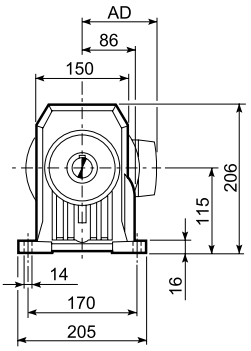

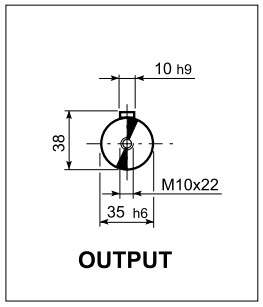

U

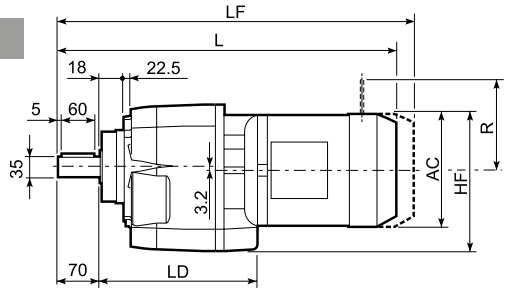

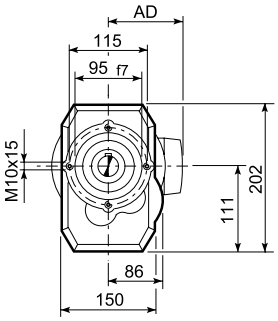

UF

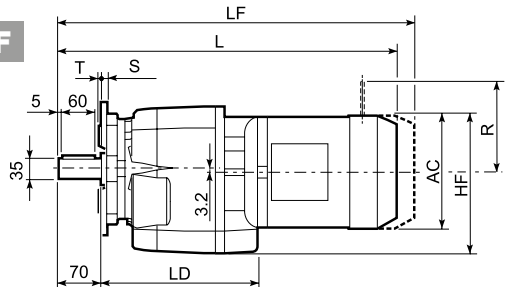

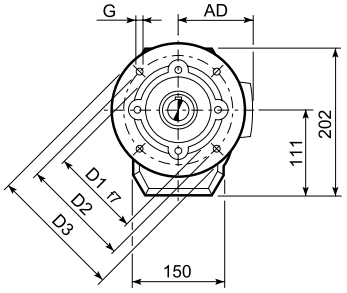

C 36_U						
	D1	D2	D3	G	T	S
FA	130	165	200	11	3.5	11
FB	180	215	250	14	4	14

				Gearmotor - Without brake								Gearmotor - With brake								
												M...FD				M...FDD				
				AC	H	HF	L		LD	AD	Kg	LF	Kg	R	AD	LF		Kg	R	AD
							plastic	metal								plastic	metal			
C 36 2/3	S1	M1		138	184	177	—	481	214	108	20	542	21	103	135	—	—	—	—	—
		ME1		138	184	177	—	481	214	108	19	542	21	103	135	—	—	—	—	—
		MX1		138	184	177	—	481	214	108	19	542	21	103	135	—	—	—	—	—
	SX10	MXN10		138	184	177	510	490.5	214	123.3	21.4	—	—	—	—	546	511.1	23.5	106	138
	S2	ME2S		156	193	186	—	509	226	119	23	579	29.2	129	143	—	—	—	—	—
		MX2S		156	193	186	—	553	226	119	28.1	625	33	129	155	—	—	—	—	—
	S3	ME3S		195	212.5	205.5	—	553	236	142	29.5	649	37	160	155	—	—	—	—	—
		ME3L	MX3S	195	212.5	205.5	—	585	236	142	37	675	41	160	155	—	—	—	—	—
		MX3L		195	212.5	205.5	—	629	236	142	43	721	49	160	155	—	—	—	—	—
	S4	ME4	MX4	258	244	240	—	693.5	—	193	71	802.5	83	204	210	—	—	—	—	—
		ME4LB	MX4LA	258	244	240	—	728.5	—	193	79	826.5	93	204	210	—	—	—	—	—
C 36 4	S05	M05		121	175.5	168.5	—	509.5	—	95	19	575.5	20	96	122	—	—	—	—	—
		ME05		121	175.5	168.5	—	509.5	—	95	19	575.5	20	96	119	—	—	—	—	—
		MX05		121	175.5	168.5	—	509.5	—	95	19	575.5	20	96	119	—	—	—	—	—
	SX05	MXN05		123	176.5	168.5	556	534	—	122.3	20.8	—	—	—	—	583	548.7	21.9	106	136
	S1	M1		138	184	177	—	538.5	—	108	21	595.5	22	103	135	—	—	—	—	—
		ME1		138	184	177	—	538.5	—	108	21	595.5	22	103	135	—	—	—	—	—
		MX1		138	184	177	—	538.5	—	108	21	595.5	22	103	135	—	—	—	—	—
	SX10	MXN10		138	184	177	567.5	548	—	123.3	23.4	—	—	—	—	603.5	568.6	25.8	106	138
	S2	ME2S		156	193	186	—	566.5	—	119	24	636.5	30	129	143	—	—	—	—	—
		MX2S		156	193	186	—	610.5	—	119	29.1	682.5	34	129	155	—	—	—	—	—
	SX20	MXN20		158	194	186	663.5	647.2	—	132.8	31.3	—	—	—	—	704.5	666.3	33.5	115	148
	S3	ME3S		195	212.5	205.5	—	610.5	—	142	31	706.5	38	160	155	—	—	—	—	—
		ME3L	MX3S	195	212.5	205.5	—	642.5	—	142	38	732.5	42	160	155	—	—	—	—	—
		MX3L		195	212.5	205.5	—	686.5	—	142	44	778.5	50	160	155	—	—	—	—	—

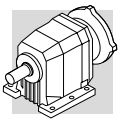

C 36...P(IEC)

P

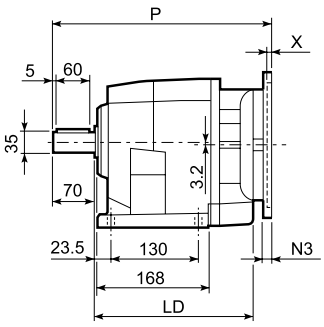

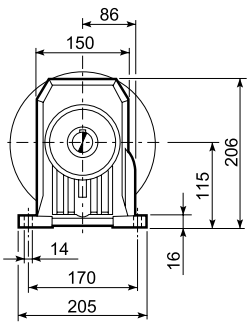

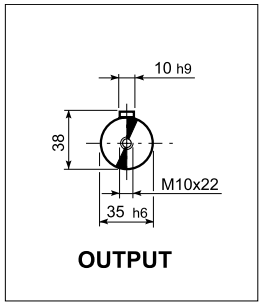

U

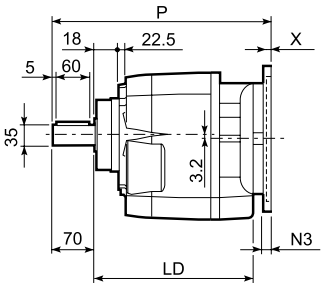

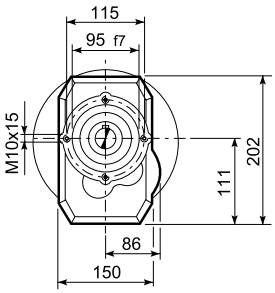

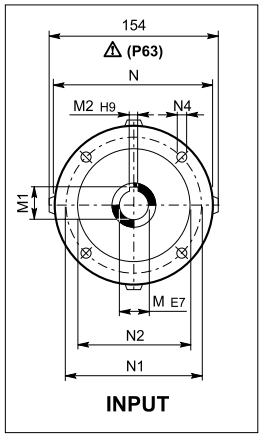

UF

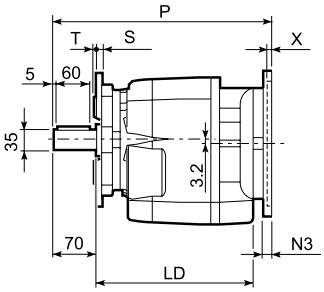

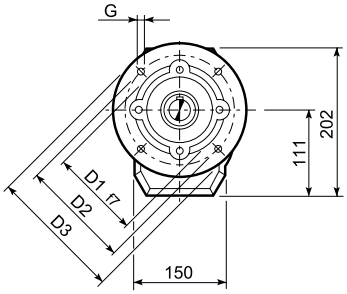

C 36_U

	D1	D2	D3	G	T	S
FA	130	165	200	11	3.5	11
FB	180	215	250	14	4	14

		LD	M	M1	M2	N	N1	N2	N3	N4	X	P	Kg
C 36 2/3	**P63**	226	11	12.8	4	140	115	95	—	M8x19	4	326	17
C 36 2/3	**P71**	226	14	16.3	5	160	130	110	—	M8x16	4.5	326	17
C 36 2/3	**P80**	236	19	21.8	6	200	165	130	—	M10x14.5	4	345.5	18
C 36 2/3	**P90**	236	24	27.3	8	200	165	130	—	M10x14.5	4	345.5	18
C 36 2/3	**P100**	236	28	31.3	8	250	215	180	—	M12x16	4.5	355.5	22
C 36 2/3	**P112**	236	28	31.3	8	250	215	180	—	M12x16	4.5	355.5	22
C 36 2/3	**P132**	—	38	41.3	10	300	265	230	16	14	5	392.5	25
C 36 4	**P63**	—	11	12.8	4	140	115	95	—	M8x19	4	383.5	20
C 36 4	**P71**	—	14	16.3	5	160	130	110	—	M8x16	4.5	383.5	20
C 36 4	**P80**	—	19	21.8	6	200	165	130	—	M10x14.5	4	403	21
C 36 4	**P90**	—	24	27.3	8	200	165	130	—	M10x14.5	4	403	21
C 36 4	**P100**	—	28	31.3	8	250	215	180	—	M12x16	4.5	413	25
C 36 4	**P112**	—	28	31.3	8	250	215	180	—	M12x16	4.5	413	25

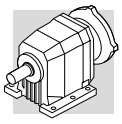

C 36...SK / SC

P

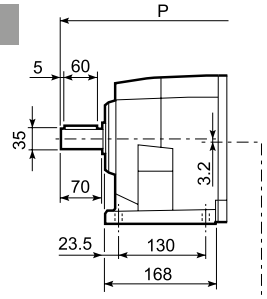

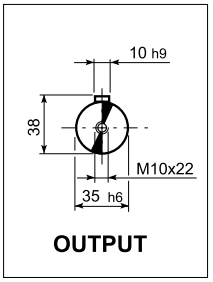

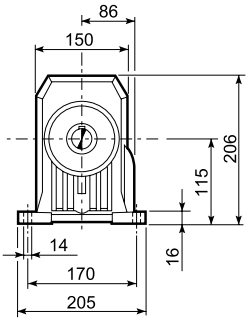

U

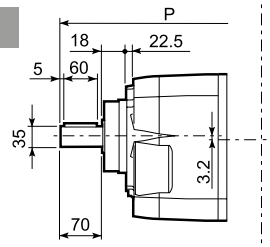

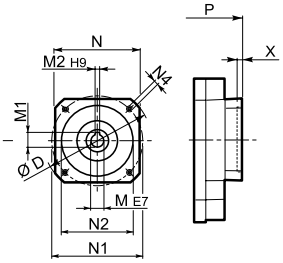

SK...

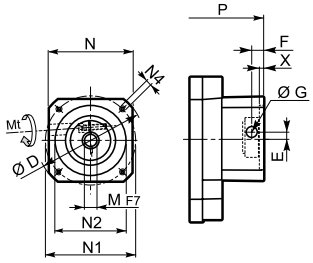

SC...

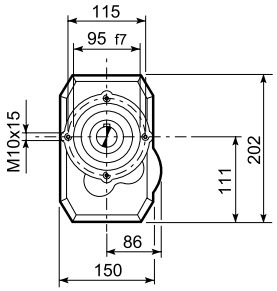

UF

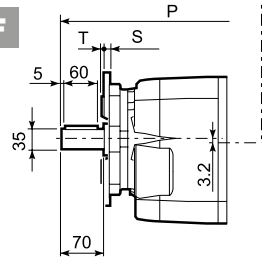

	D1	D2	D3	G	T	S
FA	130	165	200	11	3.5	11
FB	180	215	250	14	4	14

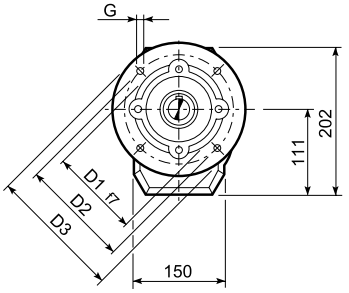

		D	M	M1	M2	N	N1	N2	N4	X	P 2/3x	P 4x	Kg
C 36 2/3/4	**SK60A**	102	11	12.8	4	82	75	60	M5x10	3.5	297.5	355	16/16/19
C 36 2/3/4	**SK60B**	102	14	16.3	5	82	75	60	M5x10	4	304.5	362	17/17/20
C 36 2/3/4	**SK80A**	115	14	16.3	5	90	100	80	M6x12	4	304.5	362	18/18/21
C 36 2/3/4	**SK80C**	120	19	21.8	6	96	100	80	M6x12	4	304.5	403	18/18/21
C 36 2/3/4	**SK95A**	130	14	16.3	5	102	115	95	M8x12	4	345.5	403	18/18/21
C 36 2/3/4	**SK95B**	130	19	21.8	6	102	115	95	M8x12	4	345.5	403	18/18/21
C 36 2/3/4	**SK95C**	130	24	27.3	8	102	115	95	M8x12	4	345.5	403	18/18/21
C 36 2/3/4	**SK110A**	150	19	21.8	6	120	130	110	M8x12	5	345.5	403	18/18/21
C 36 2/3/4	**SK110B**	150	24	27.3	8	120	130	110	M8x12	5	345.5	403	18/18/21
C 36 2/3	**SK130A**	188	24	27.3	8	142	165	130	M10x20	5	345.5	—	19/19

			Mt [Nm]	D	E	F	G	M	N	N1	N2	N4	X	P 2/3x	P 4x	Kg
C 36 2/3/4	**SC60A**	M6	15	102	7	12.5	12.5	11	82	75	60	M5x10	4	324.5	382	17/17/20
C 36 2/3/4	**SC60B**	M6	15	102	7	12.5	12.5	14	82	75	60	M5x10	4	324.5	382	18/18/21
C 36 2/3/4	**SC80A**	M6	15	115	6	12.5	12.5	14	90	100	80	M6x12	4	324.5	426.5	18/18/21
C 36 2/3/4	**SC80C**	M6	15	120	15.5	14.5	17.75	19	96	100	80	M6x12	4	369	426.5	19/19/22
C 36 2/3/4	**SC95A**	M6	15	130	16.5	15	17.75	14	102	115	95	M8x16	4	369	426.5	19/19/22
C 36 2/3/4	**SC95B**	M6	15	130	16.5	15	17.75	19	102	115	95	M8x16	4	369	426.5	19/19/22
C 36 2/3/4	**SC95C**	M6	15	130	16.5	15	17.75	24	102	115	95	M8x16	4	369	426.5	19/19/22
C 36 2/3/4	**SC110A**	M6	15	150	16.5	16	17.75	19	120	130	110	M8x16	5	369	426.5	21/21/24
C 36 2/3/4	**SC110B**	M6	15	150	16.5	16	17.75	24	120	130	110	M8x16	5	369	426.5	21/21/24
C 36 2/3	**SC130A**	M6	15	188	19	16	17.75	24	142	165	130	M10x20	5	369	—	22/22

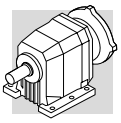

C 36...HS

P

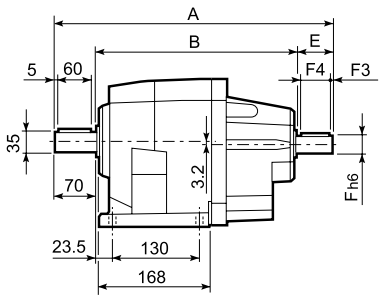

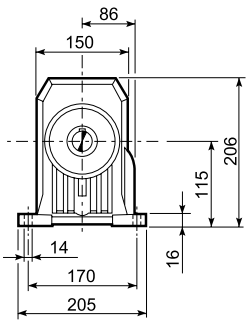

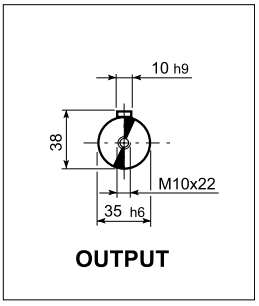

U

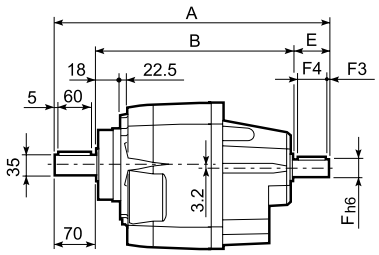

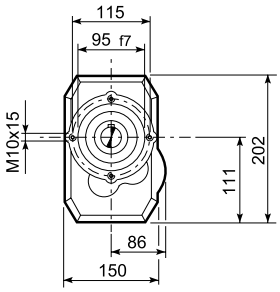

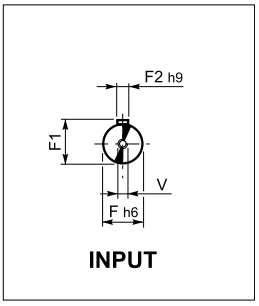

UF

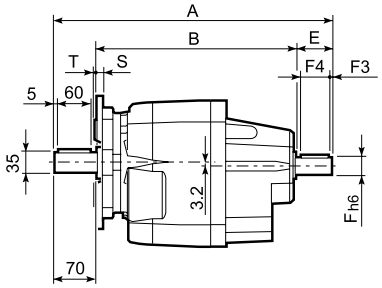

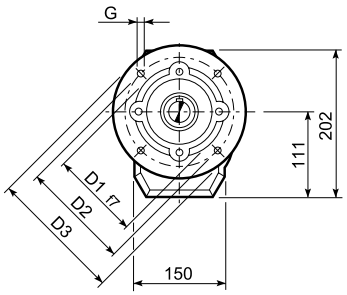

C 36_U						
	D1	D2	D3	G	T	S
FA	130	165	200	11	3.5	11
FB	180	215	250	14	4	14

		A	B	E	F	F1	F2	F3	F4	V	Kg
C 36 2	HS	415.5	295.5	50	24	27	8	2.5	45	M8x19	25.5
C 36 3		415.5	295.5	50	24	27	8	2.5	45	M8x19	25.5
C 36 4		390.5	280.5	40	16	18	5	2.5	36	M6x16	26.5

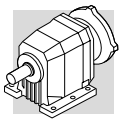

C 41...M/ME/MX/MXN

P

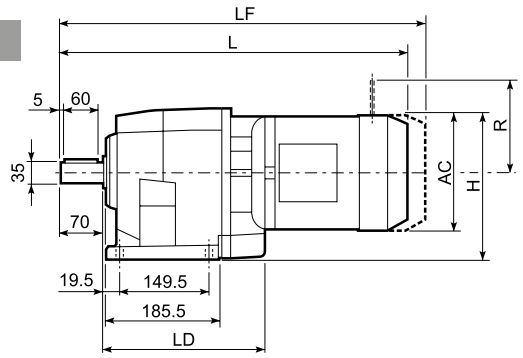

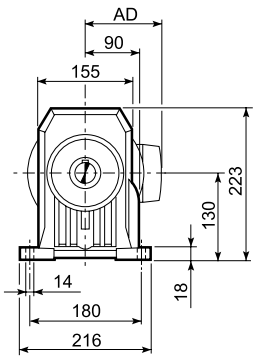

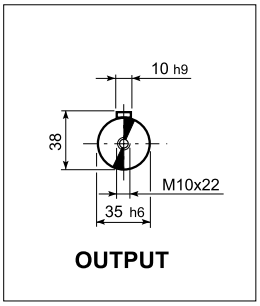

U

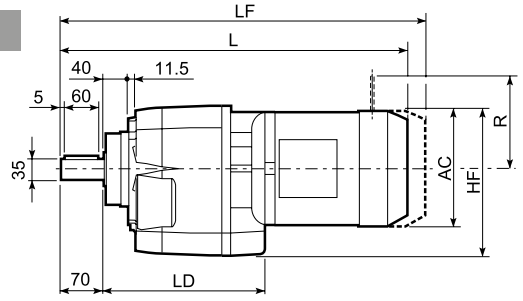

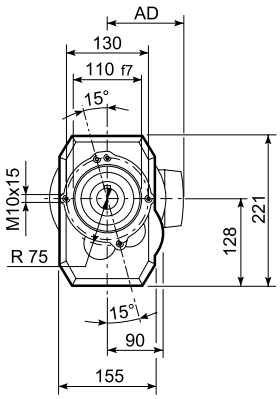

UF

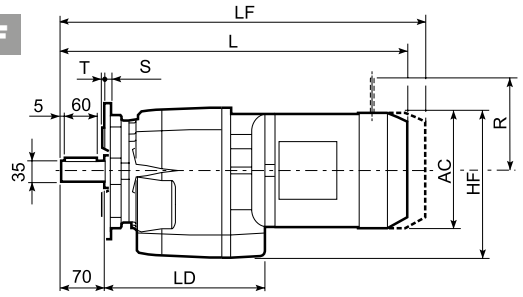

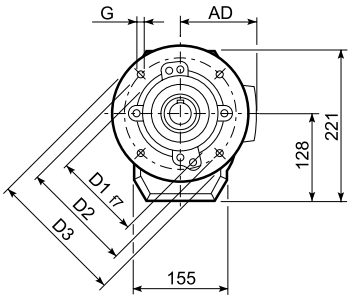

C 41_U						
	D1	D2	D3	G	T	S
FA	130	165	200	11	3.5	11
FB	180	215	250	14	4	13

				Gearmotor - Without brake								Gearmotor - With brake								
												M...FD				M...FDD				
							L					LF		R	AD	LF			R	AD
				AC	H	HF	plastic	metal	LD	AD	Kg		Kg			plastic	metal	Kg		
C 41 2/3	S1	M1		138	199	197	—	491.5	220	108	25	552.5	28	103	135	—	—	—	—	—
		ME1		138	199	197	—	491.5	220	108	24	552.5	28	103	135	—	—	—	—	—
		MX1		138	199	197	—	491.5	220	108	24	552.5	28	103	135	—	—	—	—	—
	S2	ME2S		156	208	206	—	519.5	235.5	119	31	576.5	34	129	143	—	—	—	—	—
		MX2S		156	208	206	—	563.5	235.5	119	36	635.5	38	129	143	—	—	—	—	—
	S3	ME3S		195	227.5	225.5	—	563.5	251.5	142	38	659.5	41	160	155	—	—	—	—	—
		ME3L	MX3S	195	227.5	225.5	—	595.5	251.5	142	45	685.5	46	160	155	—	—	—	—	—
		MX3L		195	227.5	225.5	—	639.5	251.5	142	51	701.5	54	160	155	—	—	—	—	—
	S4	ME4	MX4	258	259	257	—	703.5	—	193	71	812.5	88	204	210	—	—	—	—	—
		ME4LB	MX4LA	258	259	257	—	739	—	193	78	837	98	204	210	—	—	—	—	—
C 41 4	S05	M05		121	245.5	243.5	—	524	—	95	27	590	28	96	122	—	—	—	—	—
		ME05		121	245.5	243.5	—	524	—	95	27	590	28	96	119	—	—	—	—	—
		MX05		121	245.5	243.5	—	524	—	95	27	590	28	96	119	—	—	—	—	—
	SX05	MXN05		123	246.5	243.5	570.5	548.5	—	136	28.8	—	—	—	—	597.5	563.2	29.9	106	136
	S1	M1		138	199	197	—	553	—	108	28	614	31	103	135	—	—	—	—	—
		ME1		138	199	197	—	553	—	108	27	614	31	103	135	—	—	—	—	—
		MX1		138	199	197	—	553	—	108	27	614	31	103	135	—	—	—	—	—
	SX10	MXN10		138	199	197	582	562.5	—	137	29.4	—	—	—	—	618	583.1	31.8	106	138
	S2	ME2S		156	208	206	—	581	—	119	34	651	37	129	143	—	—	—	—	—
		MX2S		156	208	206	—	625	—	119	39	697	41	129	143	—	—	—	—	—
	SX20	MXN20		158	209	206	677.5	661.2	—	146	41.2	—	—	—	—	718.5	680.3	43.4	115	148
	S3	ME3S		195	227.5	225.5	—	625	—	142	41	721	44	160	155	—	—	—	—	—
		ME3L	MX3S	195	227.5	225.5	—	657	—	142	48	747	49	160	155	—	—	—	—	—
		MX3L		195	227.5	225.5	—	701	—	142	54	793	57	160	155	—	—	—	—	—

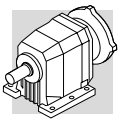

C 41...P(IEC)

P

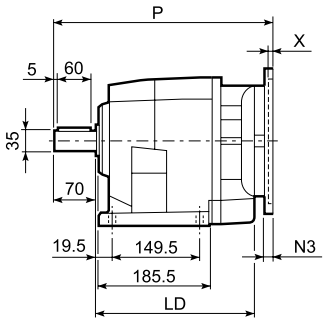

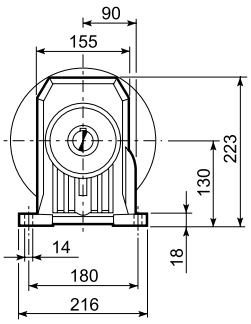

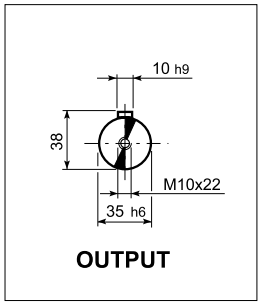

U

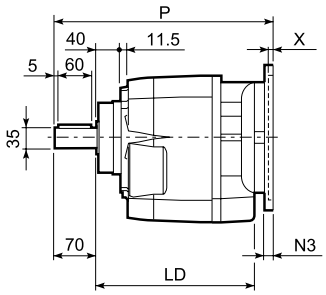

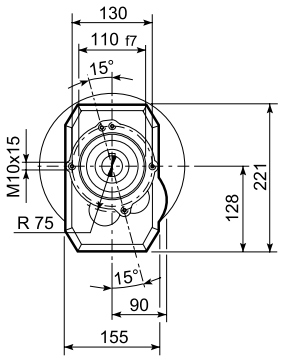

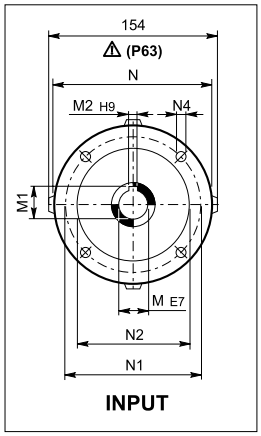

UF

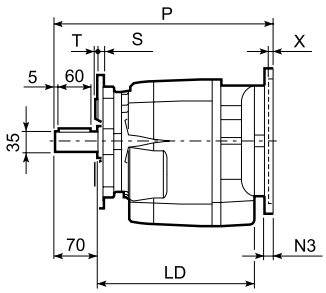

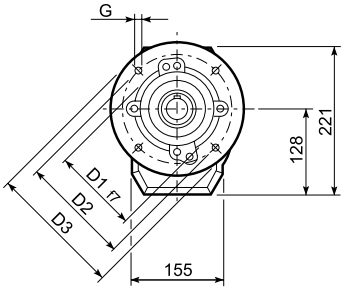

C 41_U						
	D1	D2	D3	G	T	S
FA	130	165	200	11	3.5	11
FB	180	215	250	14	4	13

		LD	M	M1	M2	N	N1	N2	N3	N4	X	P	Kg
C 41 2/3	P63	235.5	11	12.8	4	140	115	95	—	M8x19	4	336.5	27
C 41 2/3	P71	235.5	14	16.3	5	160	130	110	—	M8x16	4.5	336.5	28
C 41 2/3	P80	251.5	19	21.8	6	200	165	130	—	M10x14.5	4	356	29
C 41 2/3	P90	251.5	24	27.3	8	200	165	130	—	M10x14.5	4	356	29
C 41 2/3	P100	—	28	31.3	8	250	215	180	—	M12x16	4.5	366	33
C 41 2/3	P112	—	28	31.3	8	250	215	180	—	M12x16	4.5	366	33
C 41 2/3	P132	—	38	41.3	10	300	265	230	16	14	5	402.5	35
C 41 4	P63	—	11	12.8	4	140	115	95	—	M8x19	4	395	30
C 41 4	P71	—	14	16.3	5	160	130	110	—	M8x16	4.5	395	31
C 41 4	P80	—	19	21.8	6	200	165	130	—	M10x14.5	4	414.5	32
C 41 4	P90	—	24	27.3	8	200	165	130	—	M10x14.5	4	414.5	32
C 41 4	P100	—	28	31.3	8	250	215	180	—	M12x16	4.5	424.5	36
C 41 4	P112	—	28	31.3	8	250	215	180	—	M12x16	4.5	424.5	36

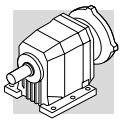

C 41...SK / SC

P

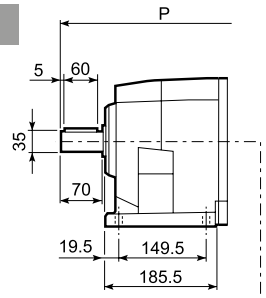

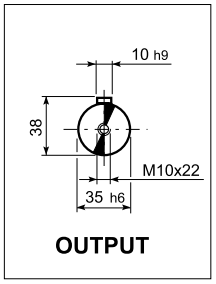

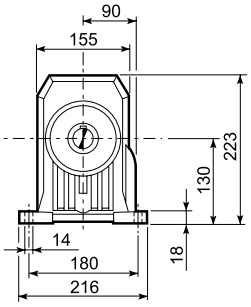

U

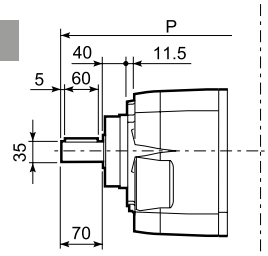

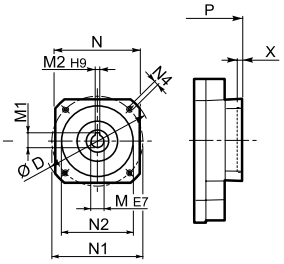

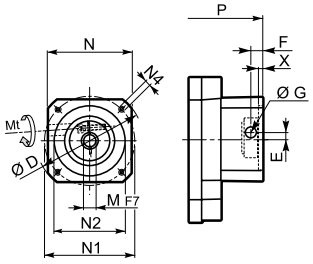

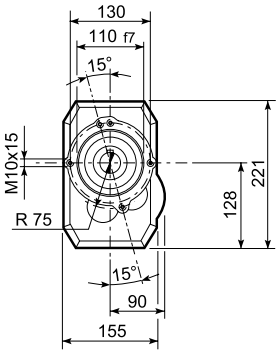

SK... **SC...**

UF

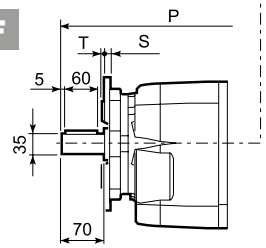

C 41_U						
	D1	D2	D3	G	T	S
FA	130	165	200	11	3.5	11
FB	180	215	250	14	4	13

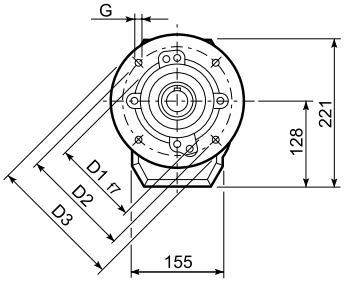

		D	M	M1	M2	N	N1	N2	N4	X	P 2/3x	P 4x	Kg
C41 4	SK60A	102	11	12.8	4	82	75	60	M5x10	3.5	—	370	31
C41 4	SK60B	102	14	16.3	5	82	75	60	M5x10	4	—	377	32
C41 4	SK80A	115	14	16.3	5	90	100	80	M6x12	4	—	377	32
C41 2/3	SK80B	120	14	16.3	5	96	100	80	M6x12	4	356.5	—	29/29
C41 2/3/4	SK80C	120	19	21.8	6	96	100	80	M6x12	4	356.5	418	29/29/32
C41 2/3/4	SK95A	130	14	16.3	5	102	115	95	M8x12	4	356.5	418	29/29/32
C41 2/3/4	SK95B	130	19	21.8	6	102	115	95	M8x12	4	356.5	418	29/29/33
C41 2/3/4	SK95C	130	24	27.3	8	102	115	95	M8x12	4	356.5	418	29/29/36
C41 2/3/4	SK110A	150	19	21.8	6	120	130	110	M8x12	5	356.5	418	29/29/36
C41 2/3/4	SK110B	150	24	27.3	8	120	130	110	M8x12	5	356.5	418	29/29/36
C41 2/3	SK130A	188	24	27.3	8	142	165	130	M10x20	5	356.5	—	31/31
C41 2/3	SK130B	189	32	35.3	10	160	165	130	M10x20	5	403	—	33/33
C41 2/3	SK180A	240	32	35.3	10	192	215	180	M12x19	5	403	—	33/33
C41 2/3	SK180B	240	38	41.3	10	192	215	180	M12x19	5	403	—	38/38

			Mt [Nm]	D	E	F	G	M	N	N1	N2	N4	X	P 2/3x	P 4x	Kg
C41 4	SC60A	M6	15	102	7	12.5	12.5	11	82	75	60	M5x10	4	—	397	32
C41 4	SC60B	M6	15	102	7	12.5	12.5	14	82	75	60	M5x10	4	—	397	33
C41 4	SC80A	M6	15	115	6	12.5	12.5	14	90	100	80	M6x12	4	—	397	33
C41 2/3	SC80B	M6	15	120	15.5	14.5	17.75	14	96	100	80	M6x12	4	380	—	30/30
C41 2/3/4	SC80C	M6	15	120	15.5	14.5	17.75	19	96	100	80	M6x12	4	380	441.5	30/30/33
C41 2/3/4	SC95A	M6	15	130	16.5	15	17.75	14	102	115	95	M8x16	4	380	441.5	30/30/34
C41 2/3/4	SC95B	M6	15	130	16.5	15	17.75	19	102	115	95	M8x16	4	380	441.5	30/30/34
C41 2/3/4	SC95C	M6	15	130	16.5	15	17.75	24	102	115	95	M8x16	4	380	441.5	30/30/35
C41 2/3/4	SC110A	M6	15	150	16.5	16	17.75	19	120	130	110	M8x16	5	380	441.5	31/31/39
C41 2/3/4	SC110B	M6	15	150	16.5	16	17.75	24	120	130	110	M8x16	5	380	441.5	31/31/39
C41 2/3	SC130A	M6	15	188	19	16	17.75	24	142	165	130	M10x20	5	380	—	32/32
C41 2/3	SC130B	M8	36	189	20	17	17.75	32	160	165	130	M10x20	5	426	—	36/36
C41 2/3	SC180A	M8	36	240	20	17.5	17.75	32	192	215	180	M12x24	5	430	—	36/36
C41 2/3	SC180B	M8	36	240	20	17.5	17.75	38	192	215	180	M12x24	5	430	—	35/35

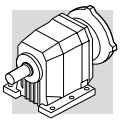

C 41...HS

P

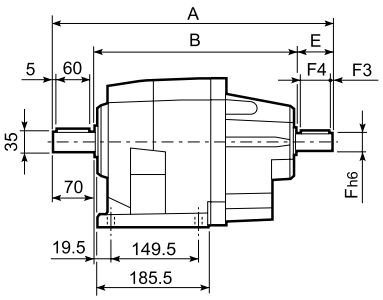

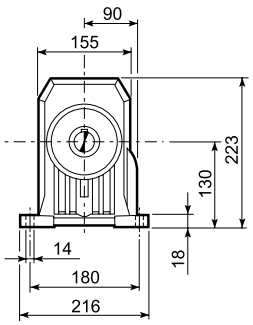

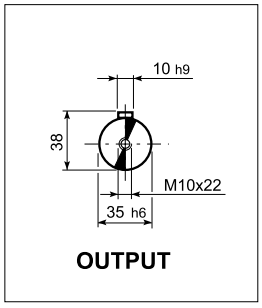

U

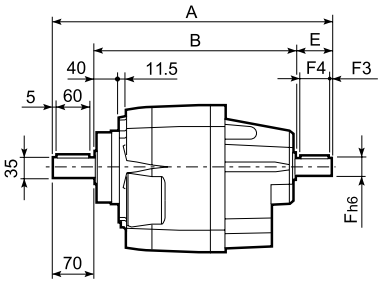

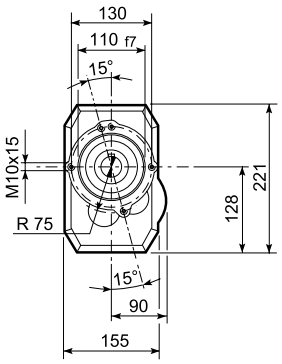

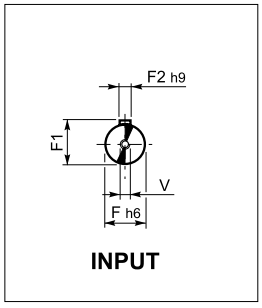

UF

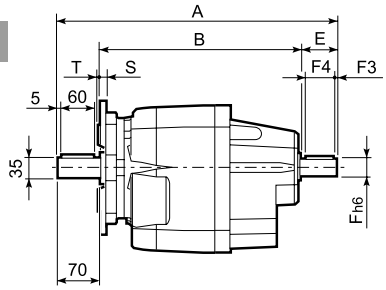

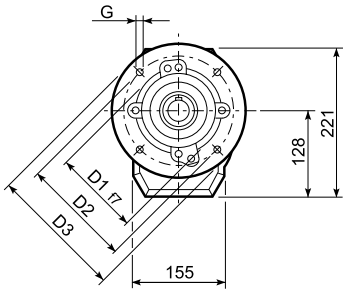

C 41_U

	D1	D2	D3	G	T	S
FA	130	165	200	11	3.5	11
FB	180	215	250	14	4	13

		A	B	E	F	F1	F2	F3	F4	V	Kg
C 41 2	**HS**	425.5	305.5	50	24	27	8	2.5	45	M8x19	30
C 41 3		425.5	305.5	50	24	27	8	2.5	45	M8x19	30
C 41 4		448	338	40	19	21.5	6	2.5	35	M6x16	33

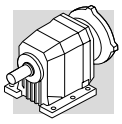

C 51...M/ME/MX/MXN

P

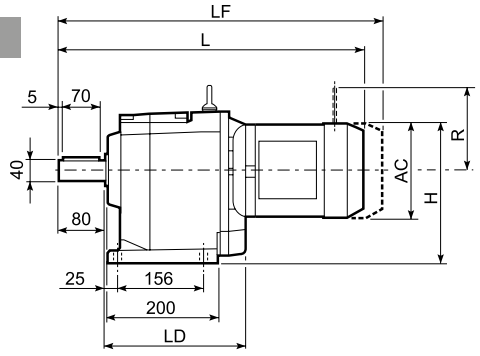

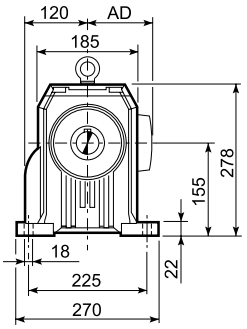

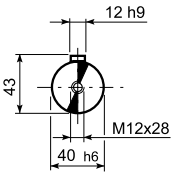

OUTPUT

U

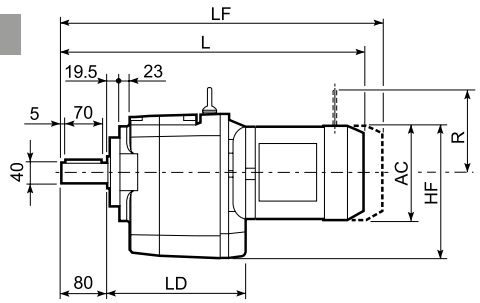

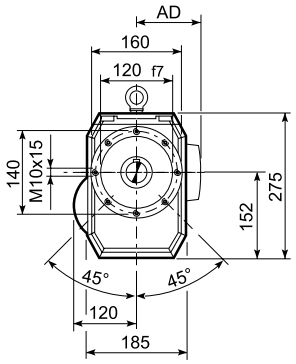

UF

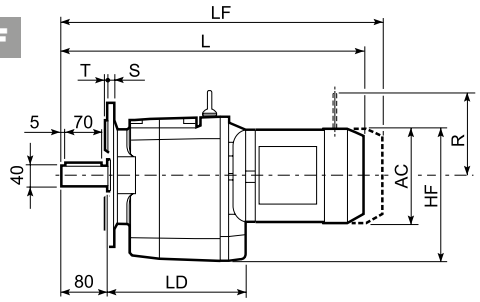

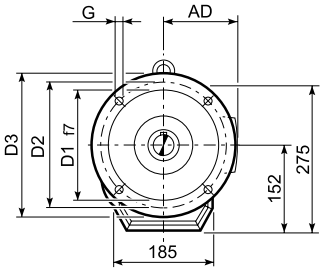

C 51_U						
	D1	D2	D3	G	T	S
FA	180	215	250	14	4	13
FB	230	265	300	14	4	16

				Gearmotor - Without brake								Gearmotor - With brake								
												M...FD				M...FDD				
				AC	H	HF	L		LD	AD	Kg	LF	Kg	R	AD	LF		Kg	R	AD
							plastic	metal								plastic	metal			
C 51 2/3	S1	M1		138	224	221	—	517.5	—	108	49	578.5	52	103	135	—	—	—	—	—
		ME1		138	224	221	—	517.5	—	108	48	578.5	52	103	135	—	—	—	—	—
		MX1		138	224	221	—	517.5	—	108	48	578.5	52	103	135	—	—	—	—	—
	S2	ME2S		156	233	230	—	545.5	252.5	119	53	615.5	58	129	143	—	—	—	—	—
		MX2S		156	233	230	—	589.5	252.5	119	53	661.5	62	129	143	—	—	—	—	—
	S3	ME3S		195	252.5	249.5	—	589.5	267.5	142	60	685.5	66	160	155	—	—	—	—	—
		ME3L	MX3S	195	252.5	249.5	—	621.5	267.5	142	65	711.5	70	160	155	—	—	—	—	—
		MX3L		195	252.5	249.5	—	665.5	267.5	142	65	757.5	78	160	155	—	—	—	—	—
	S4	ME4	MX4	258	284	281	—	729.5	—	193	99	838.5	112	204	210	—	—	—	—	—
		ME4LB	MX4LA	258	284	281	—	764.5	—	193	107	862.5	122	204	210	—	—	—	—	—
	S5	ME5S	MX5S	310	310	307	—	816	—	245	127	956	182	266	245	—	—	—	—	—
		ME5L	MX5L	310	310	307	—	860	—	245	143	994	193	266	245	—	—	—	—	—
C 51 4	S1	M1		138	224	221	—	589	—	108	52	650	55	103	135	—	—	—	—	—
		ME1		138	224	221	—	589	—	108	51	650	55	103	135	—	—	—	—	—
		MX1		138	224	221	—	589	—	108	51	650	55	103	135	—	—	—	—	—
	SX10	MXN10		138	224	221	618	598.5	—	137	53.4	—	—	—	—	654	619.1	55.8	106	138
	S2	ME2S		156	233	230	—	617	—	119	56	687	61	129	143	—	—	—	—	—
		MX2S		156	233	230	—	661	—	119	56	733	65	129	143	—	—	—	—	—
	S3	ME3S		195	252.5	249.5	—	661	—	142	63	757	69	160	155	—	—	—	—	—
		ME3L	MX3S	195	252.5	249.5	—	693	—	142	68	783	73	160	155	—	—	—	—	—
		MX3L		195	252.5	249.5	—	737	—	142	68	829	81	160	155	—	—	—	—	—

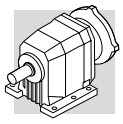

C 51...P(IEC)

P

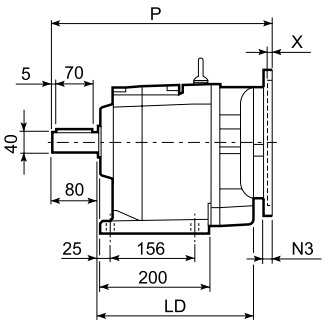

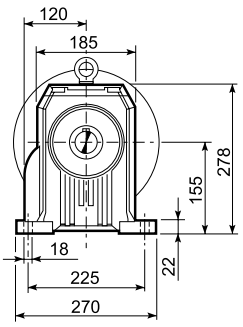

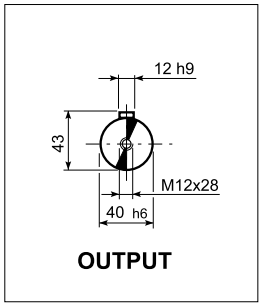

U

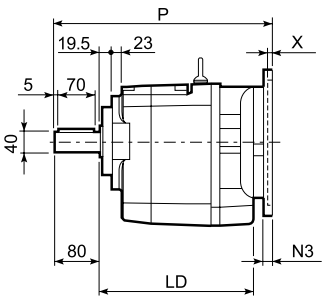

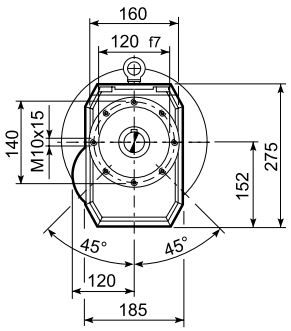

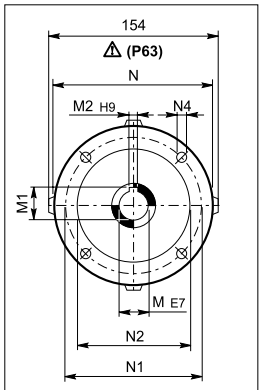

UF

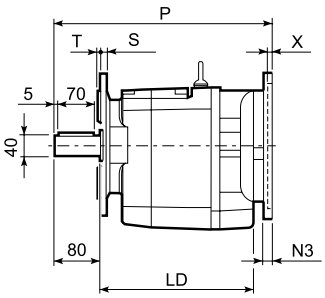

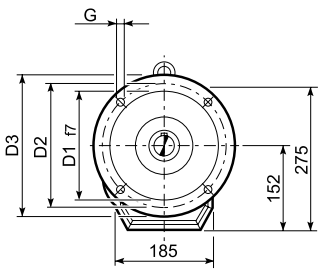

C 51_U

	D1	D2	D3	G	T	S
FA	180	215	250	14	4	13
FB	230	265	300	14	4	16

		LD	M	M1	M2	N	N1	N2	N3	N4	X	P	Kg
C 51 2/3	**P63**	252.5	11	12.8	4	140	115	95	—	M8x19	4	362.5	45
C 51 2/3	**P71**	252.5	14	16.3	5	160	130	110	—	M8x16	4.5	362.5	45
C 51 2/3	**P80**	267.5	19	21.8	6	200	165	130	—	M10x14.5	4	382	47
C 51 2/3	**P90**	267.5	24	27.3	8	200	165	130	—	M10x14.5	4	382	47
C 51 2/3	**P100**	252.5	28	31.3	8	250	215	180	—	M12x16	4.5	392	51
C 51 2/3	**P112**	252.5	28	31.3	8	250	215	180	—	M12x16	4.5	392	51
C 51 2/3	**P132**	252.5	38	41.3	10	300	265	230	16	14	5	428.5	54
C 51 2/3	**P160**	—	42	45.3	12	350	300	250	23	18	5.5	479	58
C 51 2/3	**P180**	—	48	51.8	14	350	300	250	23	18	5.5	479	58
C 51 4	**P63**	—	11	12.8	4	140	115	95	—	M8x19	4	434	47
C 51 4	**P71**	—	14	16.3	5	160	130	110	—	M8x16	4.5	434	47
C 51 4	**P80**	—	19	21.8	6	200	165	130	—	M10x14.5	4	453.5	49
C 51 4	**P90**	—	24	27.3	8	200	165	130	—	M10x14.5	4	463.5	49
C 51 4	**P100**	—	28	31.3	8	250	215	180	—	M12x16	4.5	463.5	53
C 51 4	**P112**	—	28	31.3	8	250	215	180	—	M12x16	4.5	463.5	53

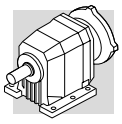

C 51...SK / SC

P

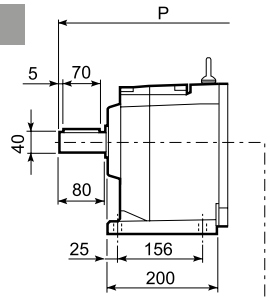

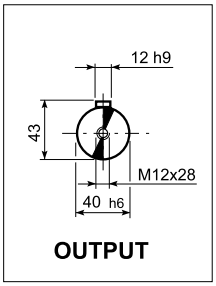

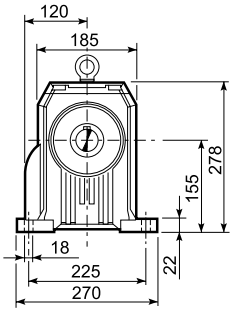

U

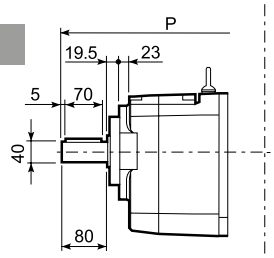

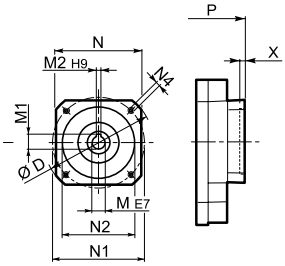

SK...

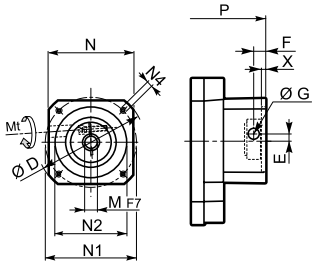

SC...

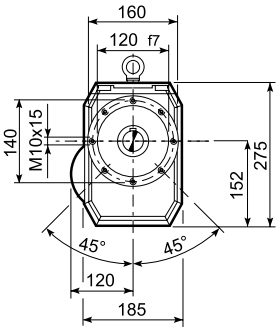

UF

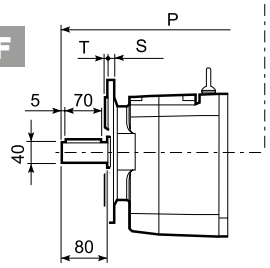

C 51_U						
	D1	D2	D3	G	T	S
FA	180	215	250	14	4	13
FB	230	265	300	14	4	16

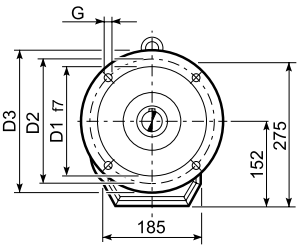

		D	M	M1	M2	N	N1	N2	N4	X	P 2/3x	P 4x	Kg
C 51 2/3	**SK80B**	120	14	16.3	5	96	100	80	M6x12	4	382	—	46/46
C 51 2/3/4	**SK80C**	120	19	21.8	6	96	100	80	M6x12	4	382	453.5	47/47/49
C 51 2/3/4	**SK95A**	130	14	16.3	5	102	115	95	M8x12	4	382	453.5	46/46/48
C 51 2/3/4	**SK95B**	130	19	21.8	6	102	115	95	M8x12	4	382	453.5	47/47/49
C 51 2/3/4	**SK95C**	130	24	27.3	8	102	115	95	M8x12	4	382	453.5	47/47/49
C 51 2/3/4	**SK110A**	150	19	21.8	6	120	130	110	M8x12	5	382	453.5	47/47/51
C 51 2/3/4	**SK110B**	150	24	27.3	8	120	130	110	M8x12	5	382	453.5	47/47/51
C 51 2/3/4	**SK130A**	188	24	27.3	8	142	165	130	M10x20	5	382	453.5	49/49/52
C 51 2/3	**SK130B**	189	32	35.3	10	160	165	130	M10x20	5	428.5	—	55/55
C 51 2/3	**SK180A**	240	32	35.3	10	192	215	180	M12x19	5	428.5	—	55/55
C 51 2/3	**SK180B**	240	38	41.3	10	192	215	180	M12x19	5	428.5	—	55/55

		Mt [Nm]	D	E	F	G	M	N	N1	N2	N4	X	P 2/3x	P 4x	Kg
C 51 2/3	**SC80B**	M6	15	120	15.5	14.5	17.75	14	96	100	80	M6x12	4	405.5	—	47/47
C 51 2/3/4	**SC80C**	M6	15	120	15.5	14.5	17.75	19	96	100	80	M6x12	4	405.5	477	48/48/50
C 51 2/3/4	**SC95A**	M6	15	130	16.5	15	17.75	14	102	115	95	M8x16	4	405.5	477	47/47/49
C 51 2/3/4	**SC95B**	M6	15	130	16.5	15	17.75	19	102	115	95	M8x16	4	405.5	477	48/48/50
C 51 2/3/4	**SC95C**	M6	15	130	16.5	15	17.75	24	102	115	95	M8x16	4	405.5	477	48/48/50
C 51 2/3/4	**SC110A**	M6	15	150	16.5	16	17.75	19	120	130	110	M8x16	5	405.5	477	49/49/52
C 51 2/3/4	**SC110B**	M6	15	150	16.5	16	17.75	24	120	130	110	M8x16	5	405.5	477	49/49/52
C 51 2/3/4	**SC130A**	M6	15	188	19	16	17.75	24	142	165	130	M10x20	5	405.5	477	50/50/53
C 51 2/3	**SC130B**	M8	36	189	20	17	17.75	32	160	165	130	M10x20	5	451.5	—	54/54
C 51 2/3	**SC180A**	M8	36	240	20	17.5	17.75	32	192	215	180	M12x24	5	455.5	—	54/54
C 51 2/3	**SC180B**	M8	36	240	20	17.5	17.75	38	192	215	180	M12x24	5	455.5	—	54/54

C 51...HS

P

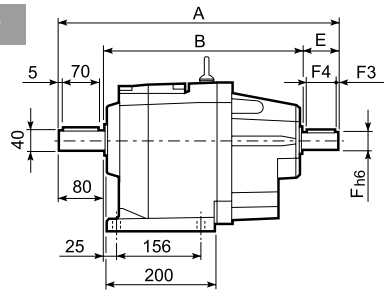

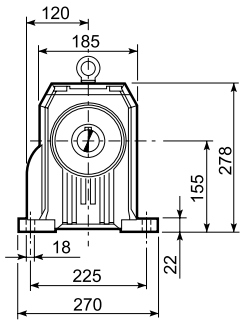

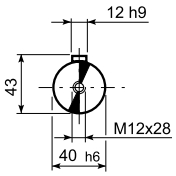

OUTPUT

U

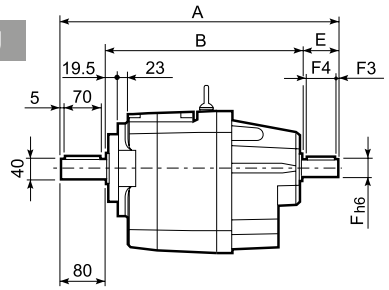

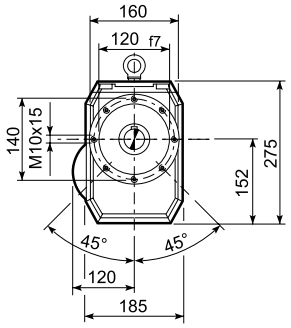

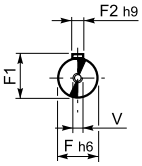

INPUT

UF

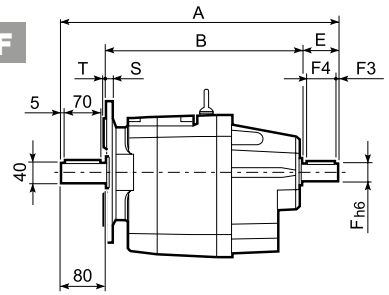

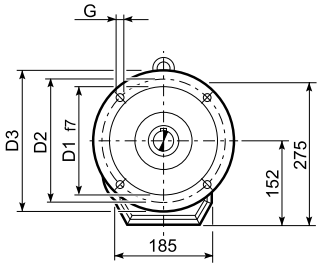

C 51_U						
	D1	D2	D3	G	T	S
FA	180	215	250	14	4	13
FB	230	265	300	14	4	16

		A	B	E	F	F1	F2	F3	F4	V	Kg
C 51 2	HS	451.5	322	50	24	24	8	2.5	45	M8x19	45
C 51 3		451.5	322	50	24	24	8	2.5	45	M8x19	45
C 51 4		484	364	40	19	21.5	6	2.5	35	M6x16	48

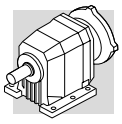

C 61...M/ME/MX

P

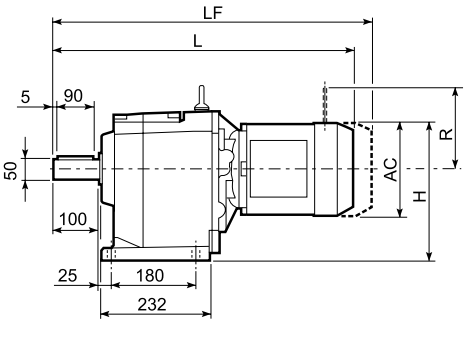

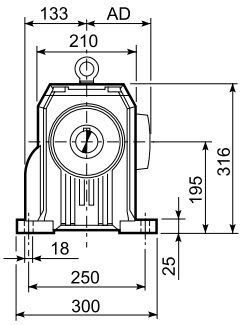

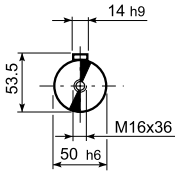

OUTPUT

U

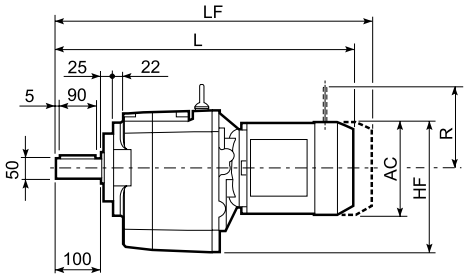

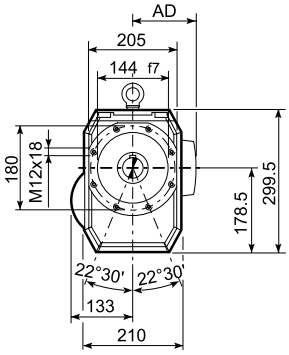

UF

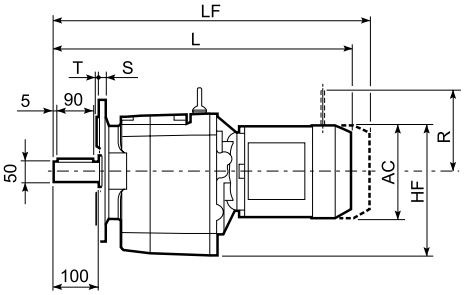

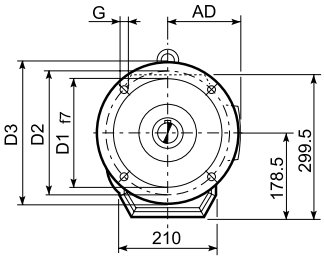

C 61_U						
	D1	D2	D3	G	T	S
FA	230	265	300	14	4	16
FB	250	300	350	18	5	18

				Gearmotor - Without brake						Gearmotor - With brake			
										M...FD			
				AC	H	HF	L	AD	Kg	LF	Kg	R	AD
C 61 2/3	S2	ME2S		156	273	256.5	598.5	119	61	668.5	65	129	143
		MX2S		156	273	256.5	642.5	119	66	714.5	69	129	143
	S3	ME3S		195	292.5	276	642.5	142	68	738.5	73	160	155
		ME3L	MX3S	195	292.5	276	674.5	142	74	764.5	77	160	155
		MX3L		195	292.5	276	718.5	142	80	810.5	85	160	155
	S4	ME4	MX4	258	324	307.5	782.5	193	108	891.5	119	204	210
		ME4LB	MX4LA	258	324	307.5	817.5	193	116	915.5	129	204	210
	S5	ME5S	MX5S	310	350	333.5	869	245	136	1009	189	266	245
		ME5L	MX5L	310	350	333.5	913	245	152	1047	200	266	245
C 61 4	S1	M1		138	264	247.5	641	108	71	702	74	103	135
		ME1		138	264	247.5	641	108	70	702	74	103	135
		MX1		138	264	247.5	641	108	70	702	74	103	135
	S2	ME2S		156	273	256.5	669	119	75	739	80	129	143
		MX2S		156	273	256.5	713	119	80	785	84	129	143
	S3	ME3S		195	292.5	276	713	142	81	809	88	160	155
		ME3L	MX3S	195	292.5	276	745	142	87	835	92	160	155
		MX3L		195	292.5	276	789	142	93	881	100	160	155

C 61...P(IEC)

P

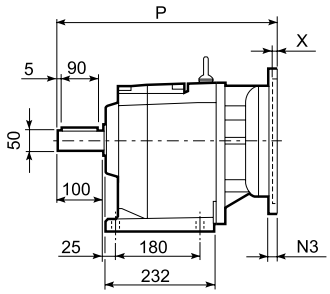

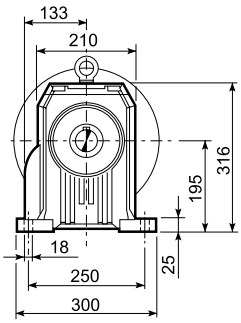

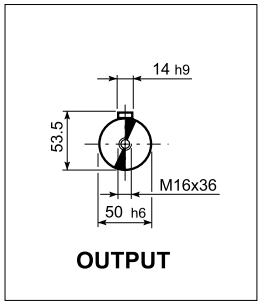

U

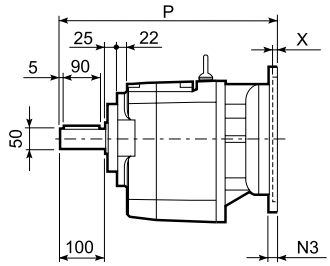

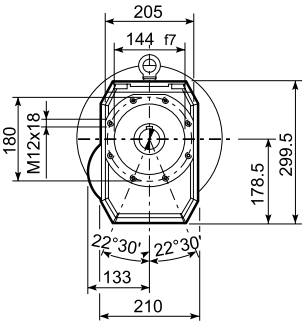

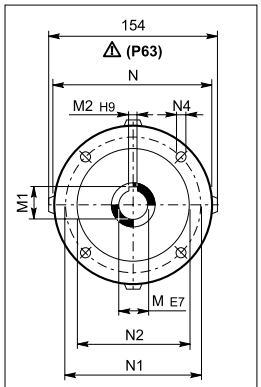

UF

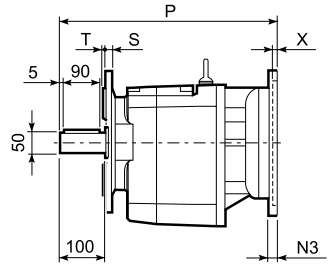

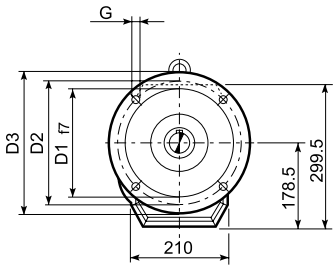

C 61_U

	D1	D2	D3	G	T	S
FA	230	265	300	14	4	16
FB	250	300	350	18	5	18

		M	M1	M2	N	N1	N2	N3	N4	X	P	Kg
C 61 2/3	**P63**	11	12.8	4	140	115	95	—	M8x19	4	415.5	55
C 61 2/3	**P71**	14	16.3	5	160	130	110	—	M8x16	4.5	415.5	57
C 61 2/3	**P80**	19	21.8	6	200	165	130	—	M10x14.5	4	435	61
C 61 2/3	**P90**	24	27.3	8	200	165	130	—	M10x14.5	4	435	61
C 61 2/3	**P100**	28	31.3	8	250	215	180	—	M12x16	4.5	444	65
C 61 2/3	**P112**	28	31.3	8	250	215	180	—	M12x16	4.5	444	65
C 61 2/3	**P132**	38	41.3	10	300	265	230	16	14	5	481.5	68
C 61 2/3	**P160**	42	45.3	12	350	300	250	23	18	5.5	532	73
C 61 2/3	**P180**	48	51.8	14	350	300	250	23	18	5.5	532	73
C 61 4	**P63**	11	12.8	4	140	115	95	—	M8x19	4	486	61
C 61 4	**P71**	14	16.3	5	160	130	110	—	M8x16	4.5	489	63
C 61 4	**P80**	19	21.8	6	200	165	130	—	M10x14.5	4	505.5	67
C 61 4	**P90**	24	27.3	8	200	165	130	—	M10x14.5	4	505.5	67
C 61 4	**P100**	28	31.3	8	250	215	180	—	M12x16	4.5	515.5	71
C 61 4	**P112**	28	31.3	8	250	215	180	—	M12x16	4.5	515.5	71

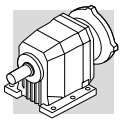

C 61...SK / SC

P

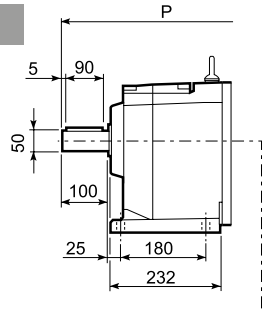

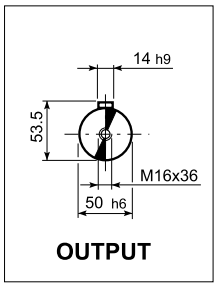

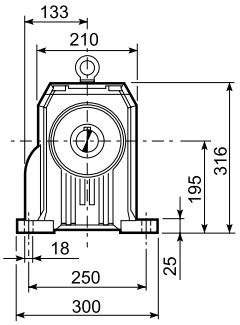

U

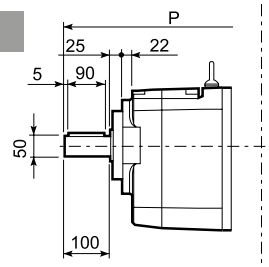

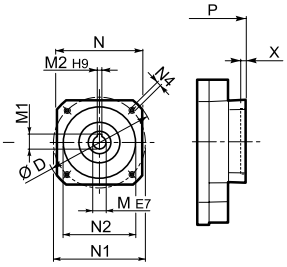

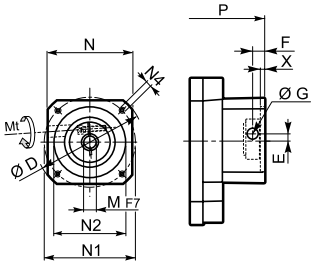

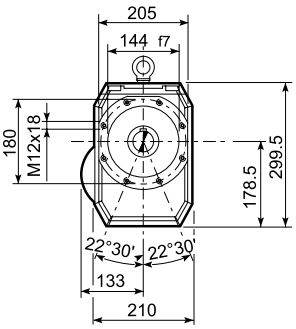

SK... **SC...**

UF

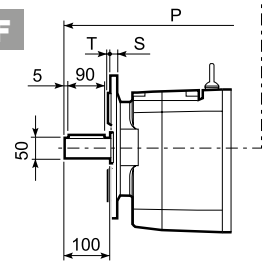

C 61_U						
	D1	D2	D3	G	T	S
FA	230	265	300	14	4	16
FB	250	300	350	18	5	18

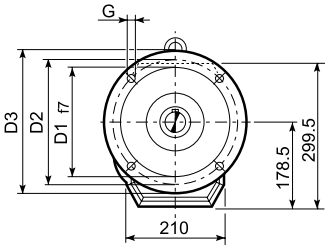

		D	M	M1	M2	N	N1	N2	N4	X	P 2/3x	P 4x	Kg
C 61 4	SK80B	120	14	16.3	5	96	100	80	M6x12	4	—	505.5	62
C 61 2/3/4	SK80C	120	19	21.8	6	96	100	80	M6x12	4	435	505.5	63/63/69
C 61 2/3/4	SK95A	130	14	16.3	5	102	115	95	M8x12	4	435	505.5	60/60/67
C 61 2/3/4	SK95B	130	19	21.8	6	102	115	95	M8x12	4	435	505.5	63/63/69
C 61 2/3/4	SK95C	130	24	27.3	8	102	115	95	M8x12	4	435	505.5	63/63/69
C 61 2/3/4	SK110A	140	19	21.8	6	120	130	110	M8x12	5	435	505.5	63/63/69
C 61 2/3/4	SK110B	140	24	27.3	8	120	130	110	M8x12	5	435	505.5	63/63/69
C 61 2/3/4	SK130A	188	24	27.3	8	142	165	130	M10x20	5	435	505.5	67/67/80
C 61 2/3	SK130B	189	32	35.3	10	160	165	130	M10x20	5	481.5	—	72/72
C 61 2/3	SK180A	240	32	35.3	10	192	215	180	M12x19	5	481.5	—	72/72
C 61 2/3	SK180B	240	38	41.3	10	192	215	180	M12x19	5	481.5	—	66/66

			Mt [Nm]	D	E	F	G	M	N	N1	N2	N4	X	P 2/3x	P 4x	Kg
C 61 4	SC80B	M6	15	120	15.5	14.5	17.75	14	96	100	80	M6x12	4	—	529	63
C 61 2/3/4	SC80C	M6	15	120	15.5	14.5	17.75	19	96	100	80	M6x12	4	458.5	529	64/64/70
C 61 2/3/4	SC95A	M6	15	130	16.5	15	17.75	14	102	115	95	M8x16	4	458.5	529	61/61/68
C 61 2/3/4	SC95B	M6	15	130	16.5	15	17.75	19	102	115	95	M8x16	4	458.5	529	64/64/70
C 61 2/3/4	SC95C	M6	15	130	16.5	15	17.75	24	102	115	95	M8x16	4	458.5	529	64/64/70
C 61 2/3/4	SC110A	M6	15	140	16.5	16	17.75	19	120	130	110	M8x16	5	458.5	529	65/65/70
C 61 2/3/4	SC110B	M6	15	140	16.5	16	17.75	24	120	130	110	M8x16	5	458.5	529	65/65/70
C 61 2/3/4	SC130A	M6	15	188	19	16	17.75	24	142	165	130	M10x20	5	458.5	529	66/66/81
C 61 2/3	SC130B	M8	36	189	20	17	17.75	32	160	165	130	M10x20	5	504.5	—	75/75
C 61 2/3	SC180A	M8	36	240	20	17.5	17.75	32	192	215	180	M12x24	5	508.5	—	75/75
C 61 2/3	SC180B	M8	36	240	20	17.5	17.75	38	192	215	180	M12x24	5	508.5	—	69/69

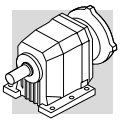

C 61...HS

P

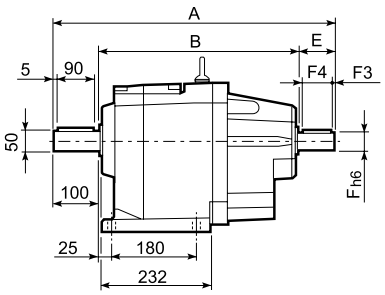

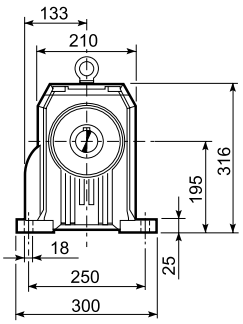

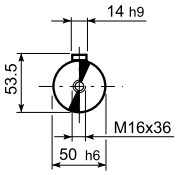

OUTPUT

U

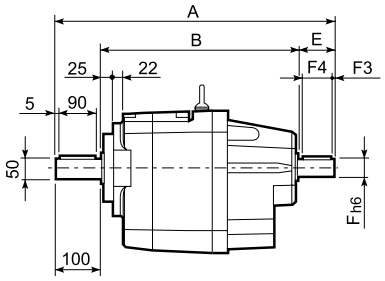

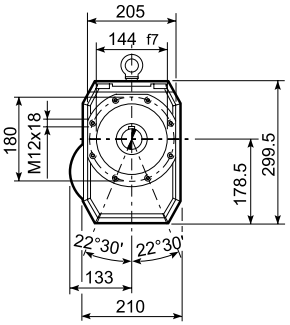

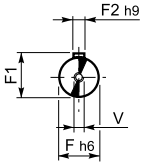

INPUT

UF

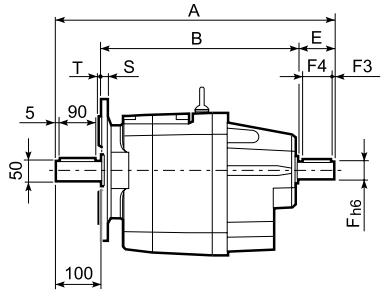

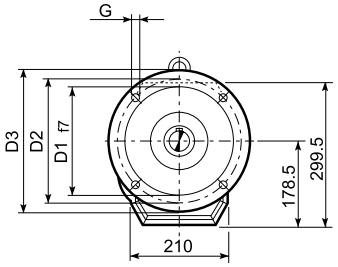

C 61_U

	D1	D2	D3	G	T	S
FA	230	265	300	14	4	16
FB	250	300	350	18	5	18

		A	B	E	F	F1	F2	F3	F4	V	Kg
C 61 2	**HS**	532	372	60	28	31	8	5	50	M10x22	66
C 61 3		532	372	60	28	31	8	5	50	M10x22	66
C 61 4		575	425	50	24	27	8	2.5	45	M8x19	72

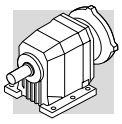

C 70...M/ME/MX

P

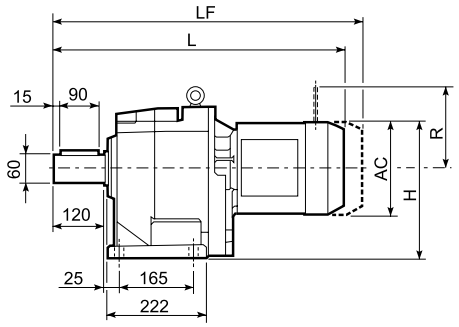

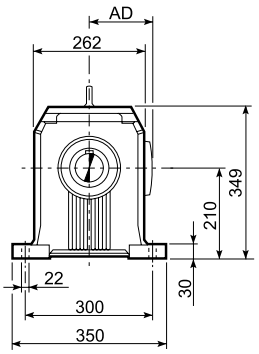

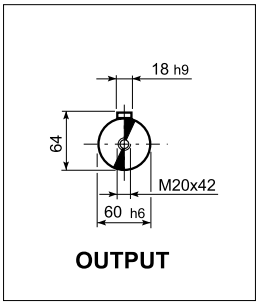

F

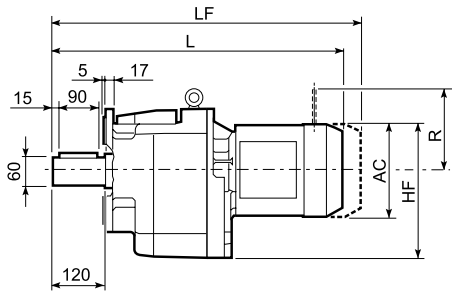

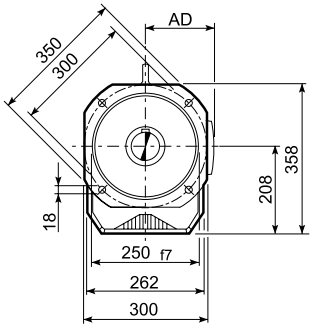

				Gearmotor - Without brake						Gearmotor - With brake			
										M...FD			
				AC	H	HF	L	AD	Kg	LF	Kg	R	AD
C 70 2/3	S2	ME2S		156	288	286	636.5	119	88	706.5	92	129	143
		MX2S		156	288	286	680.5	119	93	752.5	96	129	143
	S3	ME3S		195	307.5	305.5	680.5	142	95	776.5	100	160	155
		MX3S		195	307.5	305.5	715.5	142	98	805.5	103	160	155
		ME3L		195	307.5	305.5	712.5	142	101	803.5	104	160	155
		MX3L		195	307.5	305.5	756.5	142	107	857.5	112	160	155
	S4	ME4	MX4	258	339	337	820.5	193	135	929.5	146	204	210
		ME4LB	MX4LA	258	339	337	855.5	193	143	953.5	159	204	210
	S5	ME5S	MX5S	310	365	363	907	245	163	1047	216	266	245
		ME5L	MX5L	310	365	363	951	245	179	1085	227	266	245
C 70 4	S1	M1		138	279	277	659.5	108	88	720.5	91	103	135
		ME1		138	279	277	659.5	108	88	720.5	91	103	135
		MX1		138	279	277	659.5	108	88	720.5	91	103	135
	S2	ME2S		156	288	286	687.5	119	92	757.5	97	129	143
		MX2S		156	288	286	731.5	119	97	803.5	101	129	143
	S3	ME3S		195	307.5	305.5	731.5	142	99	827.5	105	160	155
		ME3L	MX3S	195	307.5	305.5	763.5	142	104	853.5	109	160	155
		MX3L		195	307.5	305.5	807.5	142	110	899.5	117	160	155
	S4	ME4	MX4	258	339	337	871.5	193	138	980.5	151	204	210
		ME4LB	MX4LA	258	339	337	906.5	193	146	1004.5	161	204	210

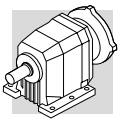

C 70...P(IEC)

P

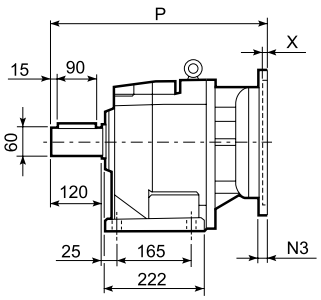

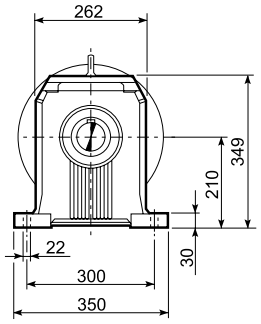

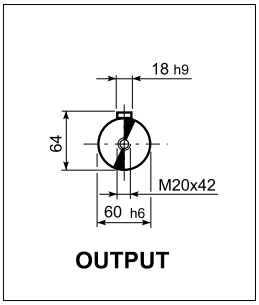

F

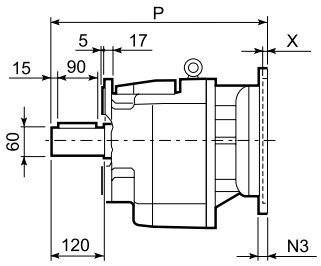

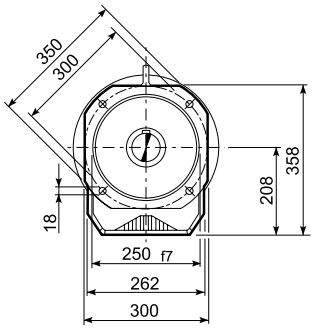

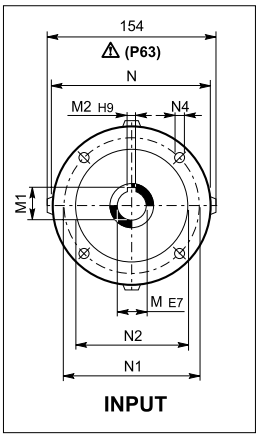

		M	M1	M2	N	N1	N2	N3	N4	X	P	Kg
C 70 2/3	**P80**	19	21.8	6	200	165	130	—	M10x14.5	4	473	88
C 70 2/3	**P90**	24	27.3	8	200	165	130	—	M10x14.5	4	473	88
C 70 2/3	**P100**	28	31.3	8	250	215	180	—	M12x16	4.5	483	92
C 70 2/3	**P112**	28	31.3	8	250	215	180	—	M12x16	4.5	483	92
C 70 2/3	**P132**	38	41.3	10	300	265	230	16	14	5	519.5	95
C 70 2/3	**P160**	42	45.3	12	350	300	250	23	18	6	575	107
C 70 2/3	**P180**	48	51.8	14	350	300	250	23	18	6	575	107
C 70 2	**P200**	55	59.3	16	400	350	300	—	M16x25	7	600	129
C 70 4	**P63**	11	12.8	4	140	115	95	—	M8x19	4	504.5	91
C 70 4	**P71**	14	16.3	5	160	130	110	—	M8x16	4.5	504.5	91
C 70 4	**P80**	19	21.8	6	200	165	130	—	M10x14.5	4	524	92
C 70 4	**P90**	24	27.3	8	200	165	130	—	M10x14.5	4	524	92
C 70 4	**P100**	28	31.3	8	250	215	180	—	M12x16	4.5	534	96
C 70 4	**P112**	28	31.3	8	250	215	180	—	M12x16	4.5	534	96
C 70 4	**P132**	38	41.3	10	300	265	230	16	14	5	570.5	98

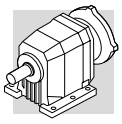

C 70...HS

P

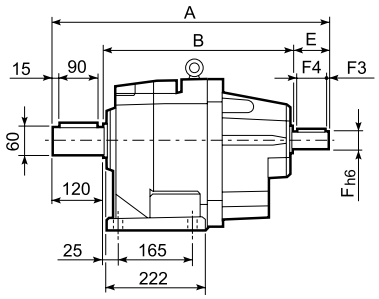

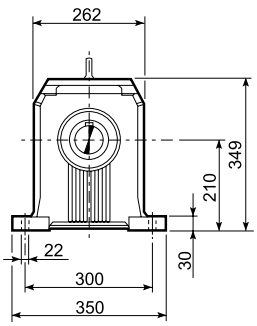

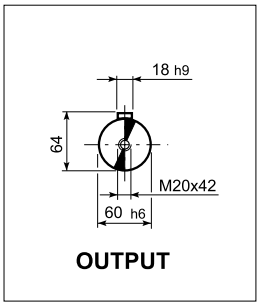

F

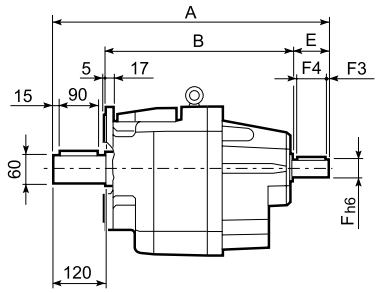

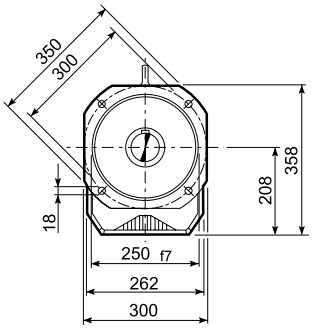

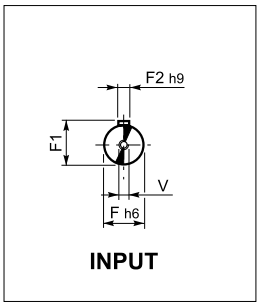

		A	B	E	F	F1	F2	F3	F4	V	Kg
C 70 2		657.5	427.5	110	42	45	12	10	90	M12x28	108
C 70 3	**HS**	657.5	427.5	110	42	45	12	10	90	M12x28	108
C 70 4		593.5	423.5	50	24	27	8	2.5	45	M8x19	94

C 80...M/ME/MX

P

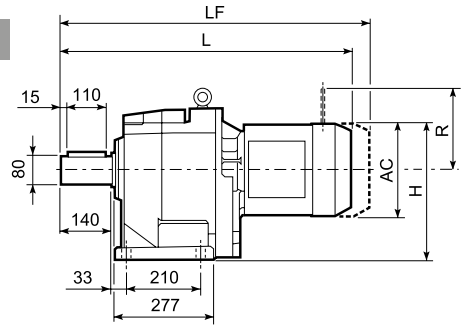

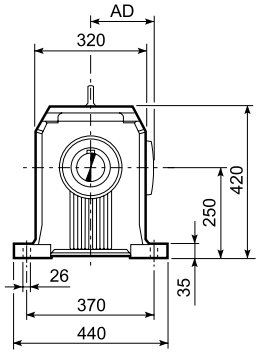

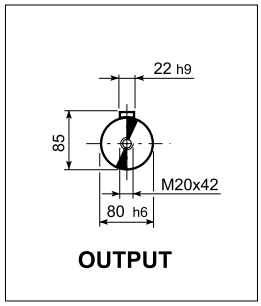

F

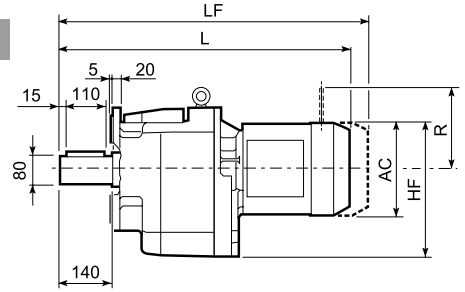

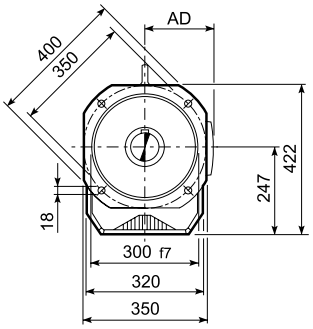

				Gearmotor - Without brake						Gearmotor - With brake			
										M...FD			
				AC	H	HF	L	AD	Kg	LF	Kg	R	AD
C 80 2/3	S3	ME3S		195	347.5	344.5	742.5	142	141	838.5	148	160	155
		ME3L	MX3S	195	347.5	344.5	774.5	142	146	864.5	152	160	155
		MX3L		195	347.5	344.5	818.5	142	152	910.5	160	160	155
	S4	ME4	MX4	258	379	376	882.5	193	180	991.5	194	204	210
		ME4LB	MX4LA	258	379	376	917.5	193	188	1015.5	204	204	210
	S5	ME5S	MX5S	310	405	402	969	245	208	1109	264	266	245
		ME5L	MX5L	310	405	402	1013	245	224	1147	275	266	245
C 80 4	S1	M1		138	319	316	733.5	108	133	794.5	111	103	135
		ME1		138	319	316	733.5	108	133	794.5	111	103	135
		MX1											
	S2	ME2S		156	328	325	761.5	119	137	831.5	117	129	143
		MX2S		156	328	325	805.5	119	142	877.5	121	129	143
	S3	ME3S		195	347.5	344.5	805.5	142	144	901.5	125	160	155
		ME3L	MX3S	195	347.5	344.5	837.5	142	149	927.5	129	160	155
		MX3L		195	347.5	344.5	881.5	142	155	973.5	137	160	155
	S4	ME4	MX4	258	379	376	945.5	193	183	1054.5	171	204	210
		ME4LB	MX4LA	258	379	376	980.5	193	191	1078.5	181	204	210

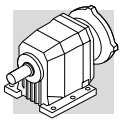

C 80...P(IEC)

P

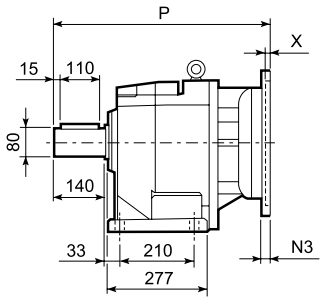

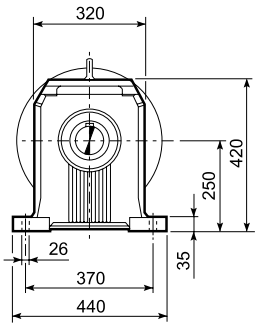

F

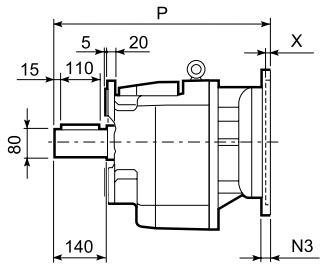

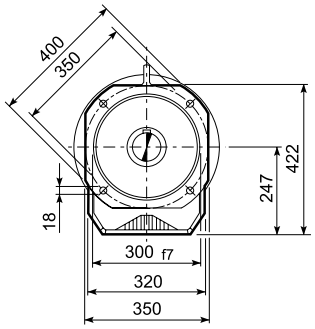

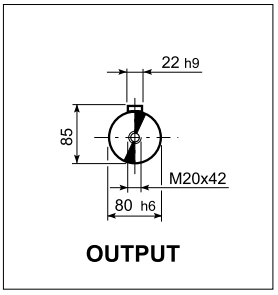

OUTPUT

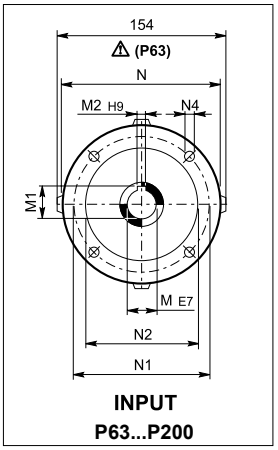

INPUT
P63...P200

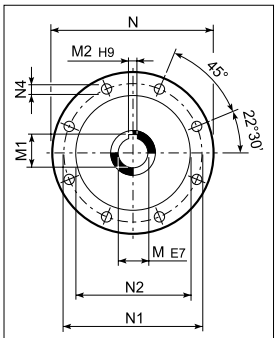

INPUT
P225

		M	M1	M2	N	N1	N2	N3	N4	X	P	kg
C 80 2/3	**P80**	19	21.8	6	200	165	130	—	M10x14.5	4	533	135
C 80 2/3	**P90**	24	27.3	8	200	165	130	—	M10x14.5	4	533	135
C 80 2/3	**P100**	28	31.3	8	250	215	180	—	M12x16	4.5	543	139
C 80 2/3	**P112**	28	31.3	8	250	215	180	—	M12x16	4.5	543	139
C 80 2/3	**P132**	38	41.3	10	300	265	230	16	14	5	579.5	141
C 80 2/3	**P160**	42	45.3	12	350	300	250	23	18	6	635	154
C 80 2/3	**P180**	48	51.8	14	350	300	250	23	18	6	635	154
C 80 2	**P200**	55	59.3	16	400	350	300	—	M16x25	7	660	176
C 80 2	**P225**	60	64.4	18	450	400	350	25	18	6	705.5	178
C 80 4	**P63**	11	12.8	4	140	115	95	—	M8x19	4	576.5	138
C 80 4	**P71**	14	16.3	5	160	130	110	—	M8x16	4.5	576.5	138
C 80 4	**P80**	19	21.8	6	200	165	130	—	M10x14.5	4	596	140
C 80 4	**P90**	24	27.3	8	200	165	130	—	M10x14.5	4	596	140
C 80 4	**P100**	28	31.3	8	250	215	180	—	M12x16	4.5	606	144
C 80 4	**P112**	28	31.3	8	250	215	180	—	M12x16	4.5	606	144
C 80 4	**P132**	38	41.3	10	300	265	230	16	M12x16	5	642.5	146

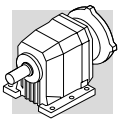

C 80...HS

P

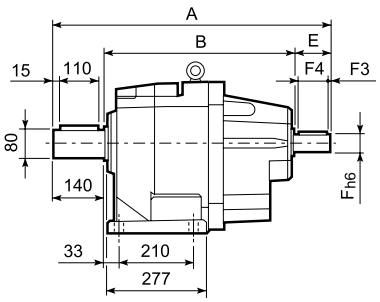

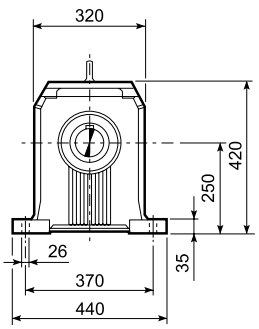

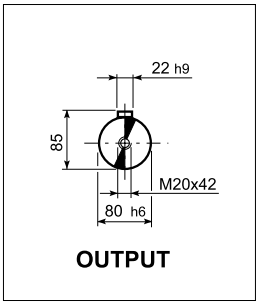

F

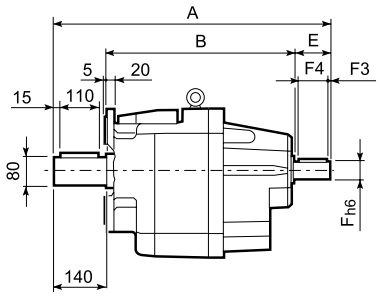

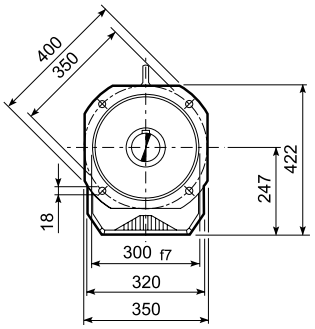

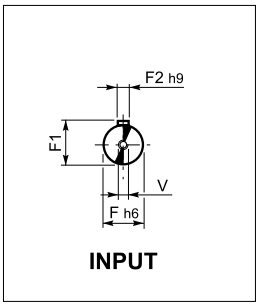

		A	B	E	F	F1	F2	F3	F4	V	Kg
C 80 2	**HS**	718.5	468.5	110	42	45	12	10	90	M12x28	154
C 80 3		718.5	468.5	110	42	45	12	10	90	M12x28	154
C 80 4		666.5	476.5	50	24	27	8	2.5	45	M8x19	141

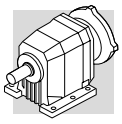

C 90...M/ME/MX

P

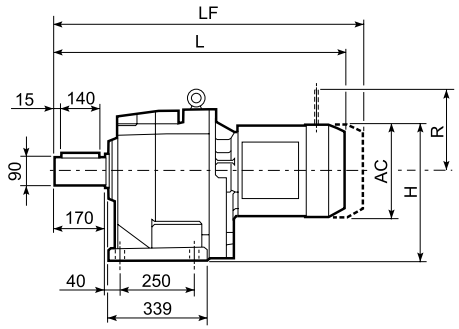

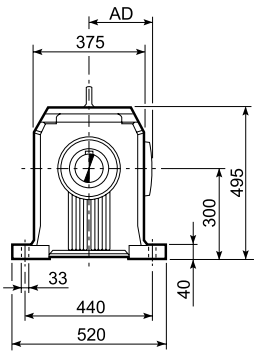

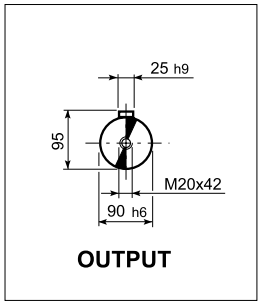

F

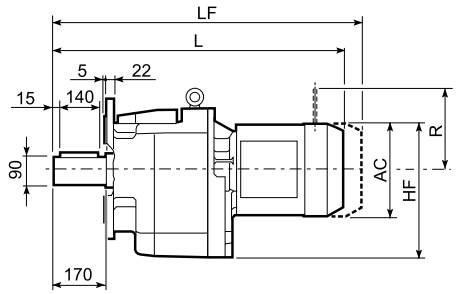

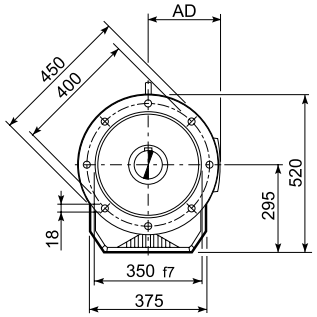

				Gearmotor - Without brake						Gearmotor - With brake			
										M...FD			
				AC	H	HF	L	AD	Kg	LF	Kg	R	AD
C 90 2/3	S3	ME3S		195	397.5	392.5	852	142	229.5	948	236.5	160	155
		ME3L	MX3S	195	397.5	392.5	884	142	236	974	240.5	160	155
		MX3L		195	397.5	392.5	987	142	242	1079	248.5	160	155
	S4	ME4	MX4	258	429	424	992	193	270	1101	282.5	204	210
		ME4LB	MX4LA	258	429	424	1027	193	278	1125	292.5	204	210
	S5	ME5S	MX5S	310	455	450	1078.5	245	298	1218.5	352.5	266	245
		ME5L	MX5L	310	455	450	1122.5	245	314	1256.5	363.5	266	245
C 90 4	S1	M1		138	369	364	862	108	226	923	228	103	135
		ME1		138	369	364	862	108	226	923	228	103	135
		MX1											
	S2	M2S		156	378	373	891	119	234	962	238	129	146
		ME2S		156	378	373	891	119	234	961	235.2	129	143
		MX2S		156	378	373	935	119	239.1	1007	239	129	143
	S3	ME3S		195	397.5	392.5	935	142	240.5	1031	243.1	160	155
		ME3L	MX3S	195	397.5	392.5	967	142	246	1057	247.1	160	155
		MX3L		195	397.5	392.5	1011	142	252	1103	255.1	160	155
	S4	ME4	MX4	258	429	424	1075	193	280	1184	289.1	204	210
		ME4LB	MX4LA	258	429	424	1126.5	193	288	1224.5	299.1	204	210

C 90...P(IEC)

P

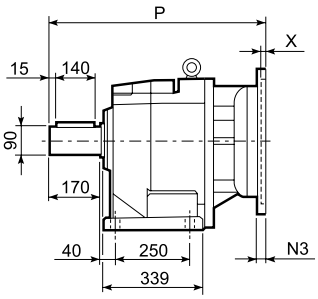

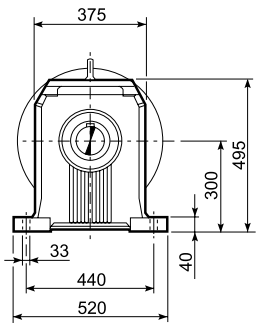

F

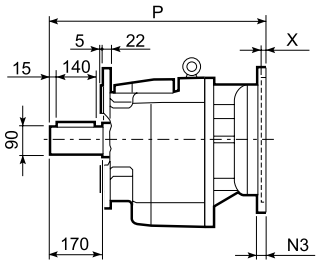

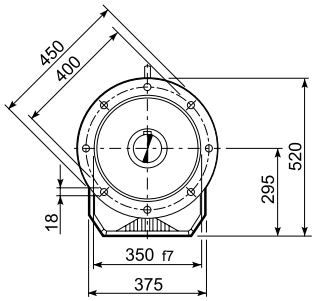

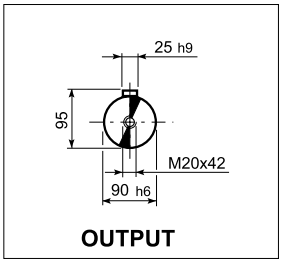

OUTPUT

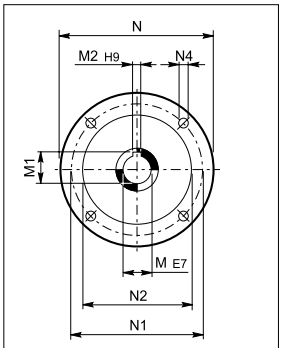

INPUT
P71...P200

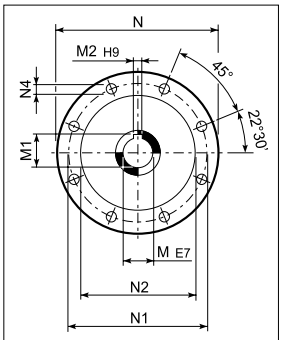

INPUT
P225...P250

		M	M1	M2	N	N1	N2	N3	N4	X	P	Kg
C 90 2/3	**P80**	19	21.8	6	200	165	130	—	M10x14.5	4	644.5	229
C 90 2/3	**P90**	24	27.3	8	200	165	130	—	M10x14.5	4	644.5	229
C 90 2/3	**P100**	28	31.3	8	250	215	180	—	M12x16	4.5	654.5	234
C 90 2/3	**P112**	28	31.3	8	250	215	180	—	M12x16	4.5	654.5	234
C 90 2/3	**P132**	38	41.3	10	300	265	230	16	14	5	691	236
C 90 2/3	**P160**	42	45.3	12	350	300	250	23	18	6	746.5	251
C 90 2/3	**P180**	48	51.8	14	350	300	250	23	18	6	746.5	251
C 90 2/3	**P200**	55	59.3	16	400	350	300	—	M16x25	7	771.5	272
C 90 2/3	**P225**	60	64.4	18	450	400	350	30	18	6	817	273
C 90 2/3	**P250**	65	69.4	18	550	500	450	30	18	6	847	295
C 90 4	**P63**	11	12.8	4	140	115	95	—	M8x19	4	707.5	236
C 90 4	**P71**	14	16.3	5	160	130	110	—	M8x16	4.5	707.5	236
C 90 4	**P80**	19	21.8	6	200	165	130	—	M10x14.5	4	727	238
C 90 4	**P90**	24	27.3	8	200	165	130	—	M10x14.5	4	727	238
C 90 4	**P100**	28	31.3	8	250	215	180	—	M12x16	4.5	737	242
C 90 4	**P112**	28	31.3	8	250	215	180	—	M12x16	4.5	737	242
C 90 4	**P132**	38	41.3	10	300	265	230	16	14	5	773.5	244
C 90 4	**P160**	42	45.3	12	350	300	250	23	18	5.5	824	248
C 90 4	**P180**	48	51.8	14	350	300	250	23	18	5.5	824	248

C 90...HS

P

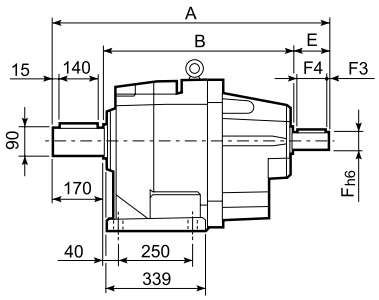

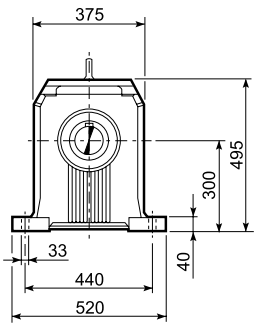

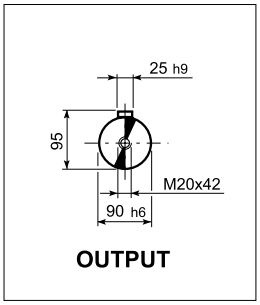

F

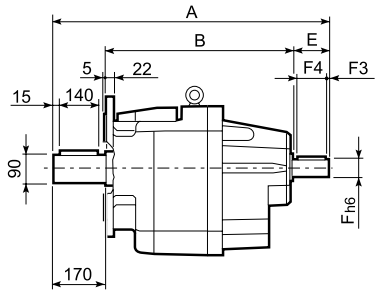

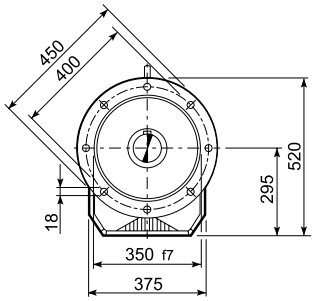

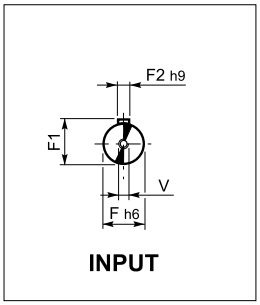

		A	B	E	F	F1	F2	F3	F4	V	Kg
C 90 2		930.5	620.5	140	60	64	18	10	120	M16x36	273
C 90 3	**HS**	930.5	620.5	140	60	64	18	10	120	M16x36	273
C 90 4		797	577	50	24	27	8	2.5	45	M8x19	240

C 100...M/ME/MX

P

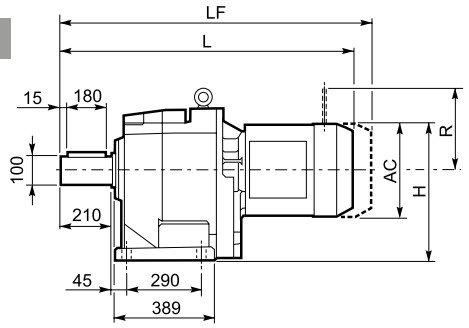

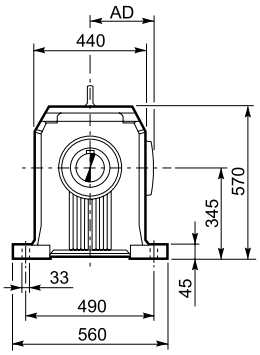

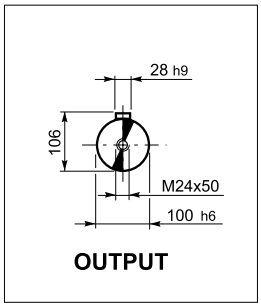

F

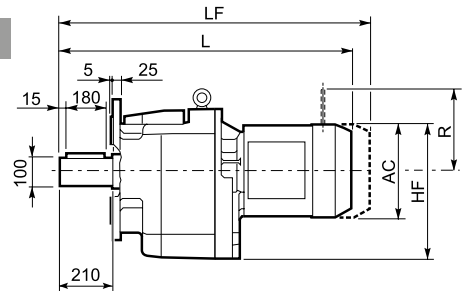

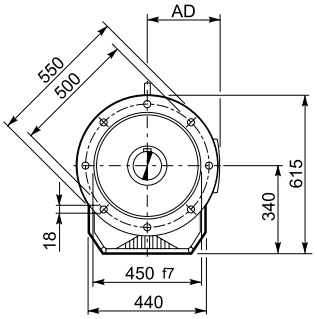

				Gearmotor - Without brake						Gearmotor - With brake			
										M...FD			
				AC	H	HF	L	AD	Kg	LF	Kg	R	AD
C 100 2/3	S4	ME4	MX4	258	474	469	1087	193	392	1196	405	204	210
		ME4LB	MX4LA	258	474	469	1122	193	400	1220	415	204	210
	S5	ME5S	MX5S	310	500	495	1173.5	245	420	1313.5	475	266	245
		ME5L	MX5L	310	500	495	1217.5	245	436	1351.5	486	266	245
C 100 4	S1	M1		138	414	409	956.5	108	346	1027.5	348	103	135
		ME1		138	414	409	956.5	108	346	1027.5	348	103	135
		MX1											
	S2	M2S		156	423	418	985.5	119	354	1056.5	357	129	146
		ME2S		156	423	418	985.5	119	354	1055.5	355	129	143
		MX2S		156	423	418	1029.5	119	359	1101.5	359	129	143
	S3	ME3S		195	442.5	437.5	1029.5	142	360	1125.5	363	160	150
		ME3L	MX3S	195	442.5	437.5	1061.5	142	366	1151.5	367	160	150
		MX3L		195	442.5	437.5	1105.5	142	372	1197.5	375	160	150
	S4	ME4	MX4	258	474	469	1169.5	193	400	1278.5	409	204	210
		ME4LB	MX4LA	258	474	469	1204.5	245	408	1338.5	419	204	210

C 100...P(IEC)

P

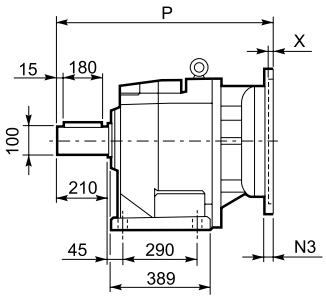

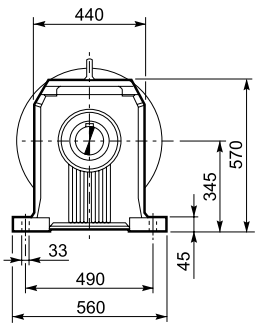

F

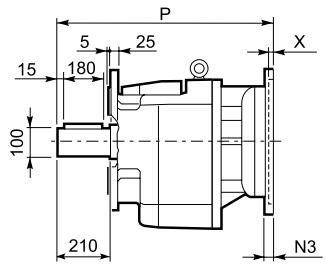

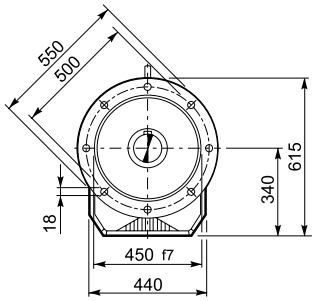

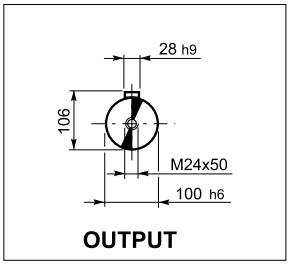

OUTPUT

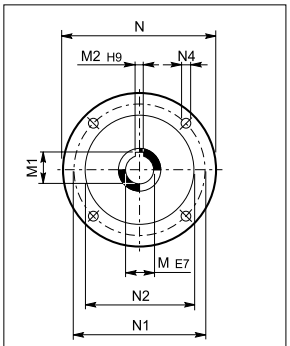

INPUT
P80...P200

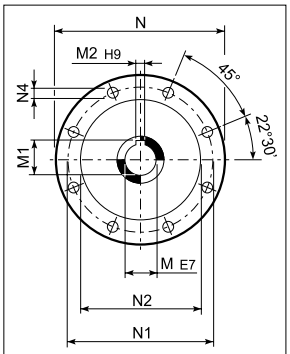

INPUT
P225...P280

		M	M1	M2	N	N1	N2	N3	N4	X	P	kg
C 100 2/3	**P100**	28	31.3	8	250	215	180	—	M12x16	4.5	749.5	364
C 100 2/3	**P112**	28	31.3	8	250	215	180	—	M12x16	4.5	749.5	364
C 100 2/3	**P132**	38	41.3	10	300	265	230	16	14	5	786	367
C 100 2/3	**P160**	42	45.3	12	350	300	250	23	18	6	841.5	382
C 100 2/3	**P180**	48	51.8	14	350	300	250	23	18	6	841.5	382
C 100 2/3	**P200**	55	59.3	16	400	350	300	—	M16x25	7	866.5	403
C 100 2/3	**P225**	60	64.4	18	450	400	350	30	18	7	912	403
C 100 2/3	**P250**	65	69.4	18	550	500	450	30	18	7	942	426
C 100 2/3	**P280**	75	79.9	20	550	500	450	30	18	6	942	426
C 100 4	**P63**	11	12.8	4	140	115	95	—	M8x19	4	803	369
C 100 4	**P71**	14	16.3	5	160	130	110	—	M8x16	4.5	803	369
C 100 4	**P80**	19	21.8	6	200	165	130	—	M10x14.5	4	822.5	371
C 100 4	**P90**	24	27.3	8	200	165	130	—	M10x14.5	4	822.5	371
C 100 4	**P100**	28	31.3	8	250	215	180	—	M12x16	4.5	832.5	375
C 100 4	**P112**	28	31.3	8	250	215	180	—	M12x16	4.5	832.5	375
C 100 4	**P132**	38	41.3	10	300	265	230	16	14	5	869	377
C 100 4	**P160**	42	45.3	12	350	300	250	23	18	5.5	919.5	381
C 100 4	**P180**	48	51.8	14	350	300	250	23	18	5.5	919.5	381

C 100...HS

P

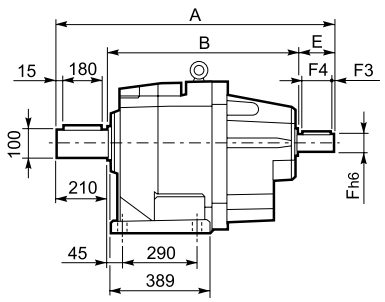

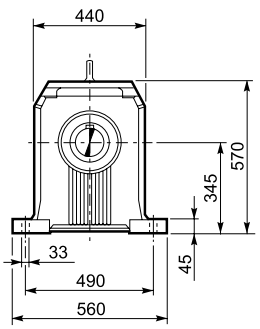

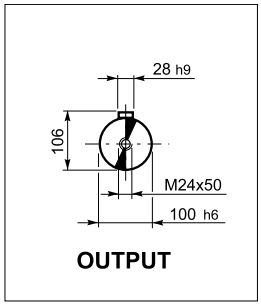

F

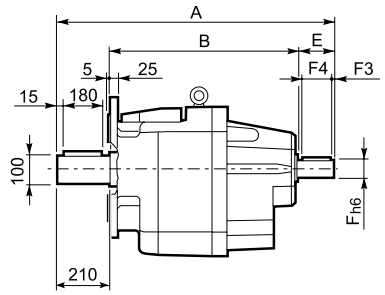

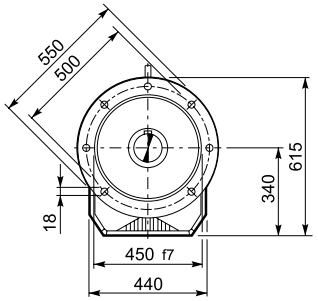

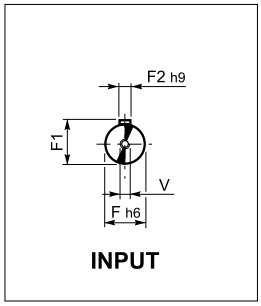

		A	B	E	F	F1	F2	F3	F4	V	Kg
C 100 2		1025.5	676	140	60	64	18	10	120	M16x36	409
C 100 3	**HS**	1025.5	676	140	60	64	18	10	120	M16x36	409
C 100 4		892	632	50	24	27	8	2.5	45	M8x19	372

31 DESIGN FEATURES

The main design characteristics are:
- modularity
- space effective
- universal mounting
- high efficiency
- quite operation
- gears in hardened and case-hardened steel
- bare aluminium housing for sizes 05, 10, 20, 30, unpainted high strength painted cast-iron housings for larger frame sizes
- input and output shafts from high grade steel.

(C 26)

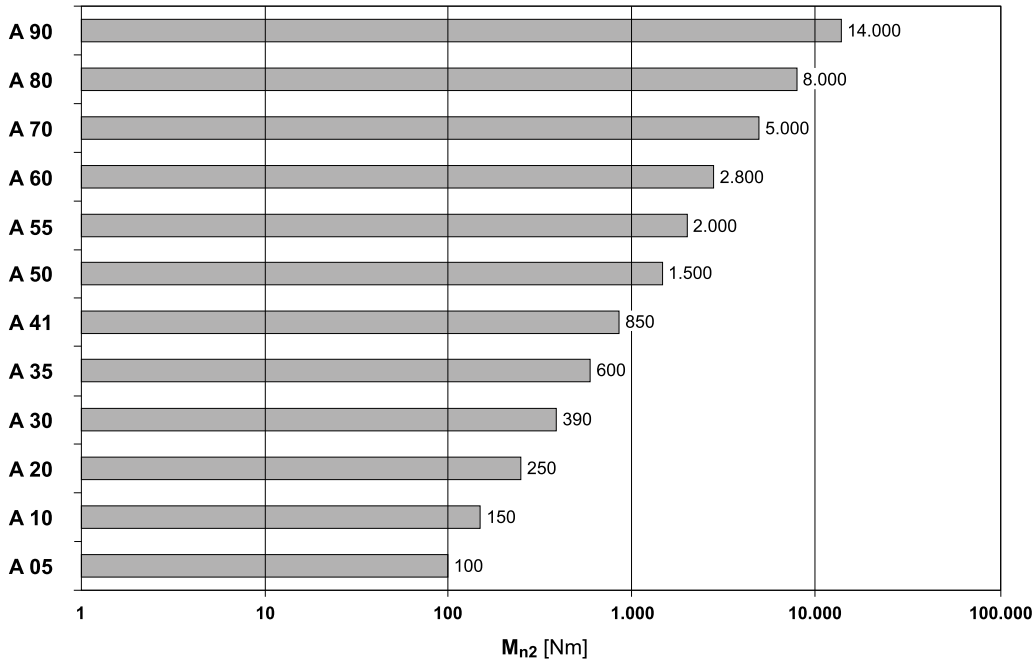

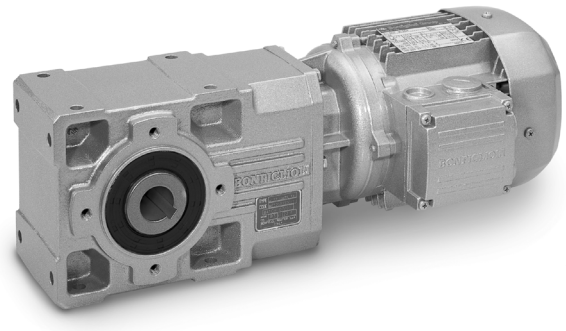

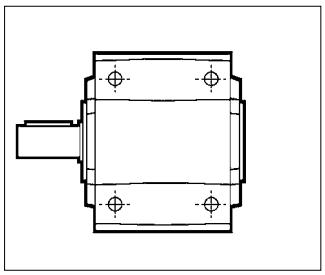

UR

Single extension output shaft

A 05 ... A 90

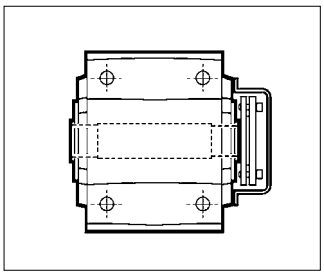

US

Hollow output shaft and shrink disc

A 05 ... A 90

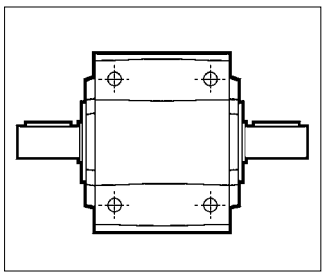

UD

Double extended output shaft

A 05 ... A 90

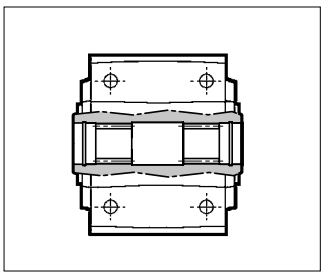

UV

Splined hollow shaft DIN 5480

A 20 ... A 60

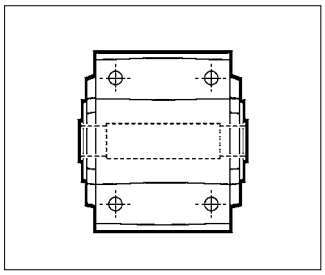

UH

Hollow output shaft and keyway

A 05 ... A 90

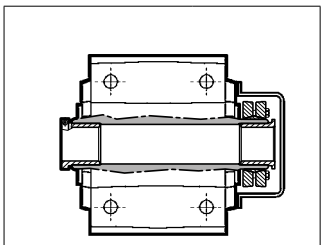

QF (Quick-fit)

Hollow shaft with adapter bushings and shrink disc

A 10 ... A 60

	$M_{n2\ max}$ [Nm]
A 35 QF35	550
A 55 QF55	1900

Basic versions with bolted flange

The sketches show the applicable flanges to the basic versions and their positions, designated with either ① or ②.

UR F1... UR F2...

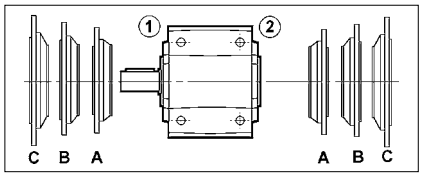

UD F1... UD F2...

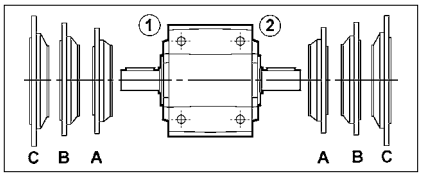

UH... F1... UH... F2...

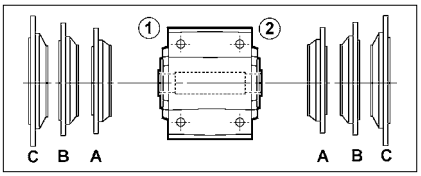

US F1... US F2...

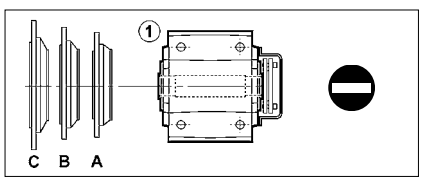

UV F1... UV F2...

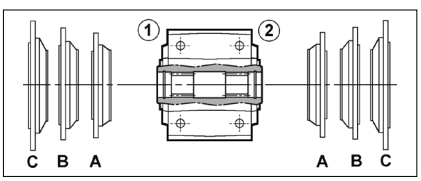

QF...

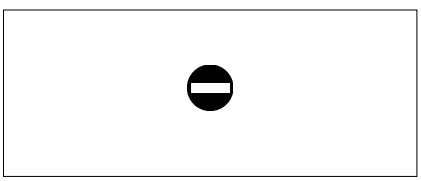

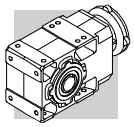

33 DESIGNATION

GEAR UNIT

A 35 2 UH40 F1A 49.1 S1 VA .....

OPTIONS

MOUNTING POSITION
B3 (Standard), **B6**, **B7**, **B8**, **VA**, **VB**

INPUT CONFIGURATION

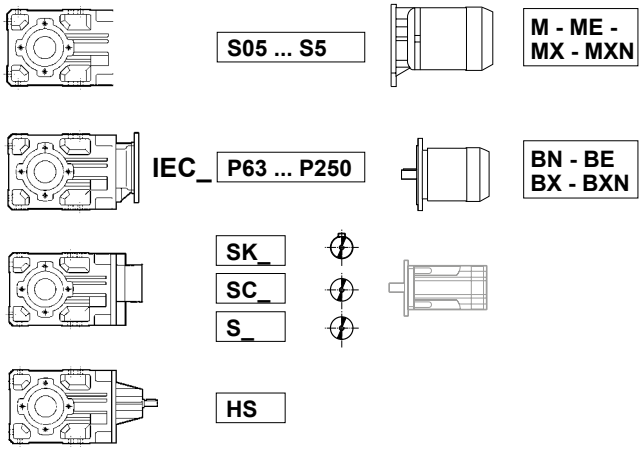

GEAR RATIO

OUTPUT FLANGE SIZE AND POSITION
(specify only if requested)
F = Flanged version
1, **2** = Flange position
A, **B**, **C** = Flange size

VERSION

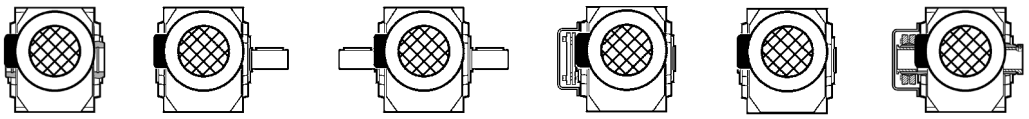

UH_	UR	UD	US	UV	QF
	(A 05...A 90)	(A 05...A 90)	(A 05...A 90)	(A 20...A 60)	(A 10...A 60)

A 05	A 10	A 20	A 30	A 35	A 41	A 50	A 55	A 60	A 70	A 80	A 90
UH25	**UH25**	**UH30**	**UH35**	**UH40**	**UH45**	**UH50**	**UH60**	**UH60**	**UH70**	**UH80**	**UH90**
—	UH30	UH35	UH40	UH35	UH40	UH55	UH50	UH70	UH80	UH90	UH100

REDUCTIONS
2 (A 05...A 60), **3** (A 20...A 90), **4** (A 50...A 90)

GEAR FRAME SIZE
05, **10**, **20**, **30**, **35**, **41**, **50**, **55**, **60**, **70**, **80**, **90**

TYPE: **A** = Helical bevel gear units

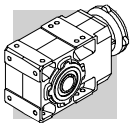

MOTOR | BRAKE

M 1LA 4 230/400-50 IP54 CLF ..... **W FD** 7.5 R SB 220 SA .....

OPTIONS

BRAKE SUPPLY

RECTIFIER TYPE
AC/DC
NB, SB, NBR, SBR, NR, SR

BRAKE HAND RELEASE
R, **RM**

BRAKE TORQUE

BRAKE TYPE
FD (d.c. brake)
FDD (high performance d.c. brake)

TERMINAL BOX POSITION
W (default), **N**, **E**, **S**

MOTOR MOUNTING
— (compact motor)
B5 (IEC - motor)

INSULATION CLASS
CL F standard
CL H option

DEGREE OF PROTECTION
IP54, IP55, IP56

VOLTAGE - FREQUENCY
For BXN/MXN see the “Voltage & frequency” section on EVOX catalogue

POLE NUMBER
2, **4**, **6**

MOTOR SIZE
0B ... 5LA (compact motor)
63A ... 280SBK (IEC motor)

MOTOR TYPE
MX - MXN = compact 3-phase, class IE3
BX - BXN = IEC 3-phase, class IE3
BY = IEC 3-phase, class IE4
ME = compact 3-phase, class IE2
BE = IEC 3-phase, class IE2
M = compact 3-phase, class IE1
BN = IEC 3-phase, class IE1

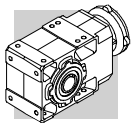

33.1 Gearbox options

LUBRICATION

Gearboxes A05, A10, A20, A30, A35, and A41, are usually factory filled with oil in the standard version.
Gearboxes A50, A55, A60, A70, A80 and A90, are usually supplied unlubricated in the standard version.
However, for all sizes of gearbox factory filled with oil, it is possible to request the supply with more types of oil, selectable according to what is defined in the following table.
The option is not available for gearboxes A50, A55, A60, A70, A80 and A90 in mounting positions B6 and B7.
The option is not available for gearbox A602 in mounting position VB.

Lubrication	Type	Designation	Producer
LU [1]	PolyAlfaOlefine (PAO)	OMALA S4 GX 150	
LY [1]	PolyAlfaOlefine (PAO)	OMALA S4 GX 220	
LV [1]	PolyAlfaOlefine (PAO)	OMALA S4 GX 320	
LW [1]	PolyAlfaOlefine (PAO)	OMALA S4 GX 460	
LH	PolyGlicole (PAG)	OMALA S4 WE 150	
LS	PolyGlicole (PAG)	OMALA S4 WE 220	
LO*	PolyGlicole (PAG)	OMALA S4 WE 320	
LK	PolyGlicole (PAG)	OMALA S4 WE 460	
LN [1] [2]	Mineral Base EP	OMALA S2 G 150	
LZ [1] [2]	Mineral Base EP	OMALA S2 G 220	
LI [1] [2]	Mineral Base EP	OMALA S2 G 320	
LJ [1] [2]	Mineral Base EP	OMALA S2 G 460	
LA	Food grade	KLUBERSYNTH UH1 6-150	
LB	Food grade	KLUBERSYNTH UH1 6-220	
LC	Food grade	KLUBERSYNTH UH1 6-320	
LD	Food grade	KLUBERSYNTH UH1 6-460	

* unless otherwise specified, the gearboxes A05, A10, A20, A30, A35 and A41 supplied with lubricant use OMALA S4 WE 320 oil..

[1] Use not permitted for gearboxes A 05…. A 60.
[2] The use of mineral oil is permitted on gearmotors with service factor $f_s \geq 1.30$.

SO

Gear units A05, A10, A20, A30, A35 and A41, usually factory filled with oil, are, in this case, supplied unlubricated.

DV

Dual oil seals on input shaft. (Only available for integral gearmotors).

VV

Fluoro elastomer oil seal on input shaft.

PV
All oil seals in Fluoro elastomer material.

TKL
Taconite seals are available, for output axis of gearboxes sizes (from) A70 to A90, to use in environments characterized by the presence of abrasive dust or powders. Taconite seals incorporate a combination of sealing rings, labyrinths and a grease chamber.
Greasing must be ensured as part of the scheduled maintenance programme.
This option includes fluoro elastomer oil seals on all axes.
For mounting position B6 please consult Bonfiglioli's Technical service.

AL, AR
On request the gear unit can be provided complete with a backstop device allowing the output shaft to rotate only in the direction specified at the time of ordering. The anti-run back device exclude RB option.
Alternatively, for compact gearmotors, the backstop device is available as an option of the motor (see Motor Options).
When ordering the gear unit, the direction of free rotation must be specified through either the AR or the AL option. The following table shows the gearboxes in which the anti-run back device can be installed and supports the selection of AR or AL option, based on the desired direction of free rotation at the gearbox output shaft (clockwise or counter-clockwise).

(C 27)

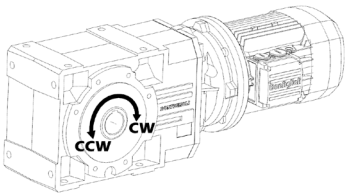

(C 28)

Option to select based on the required direction of free rotation at gearbox output shaft
The table refers to the gearbox in mounting position B3, on left side seen from motor side (see C27).
(CW: clockwise, CCW: counterclockwise)

	CW			CCW		
	2x	**3x**	**4x**	**2x**	**3x**	**4x**
05						
10						
20						
30	AL 1)			AR 1)		
35	AL 1) 2)			AR 1) 2)		
41	AL 3)			AR 3)		
50		AL	AL		AR	AR
55		AL	AL		AR	AR
60		AL	AL		AR	AR
70		AL	AL		AR	AR
80		AL	AL		AR	AR
90		AL	AL		AR	AR

1) A 30 2 and A 35 2: backstop not compatible with servomotor adapters type S_60A, S_ 60B, S_80A
2) A 35 2: backstop not available for ratios 5.4 ... 11.8
3) A 41 2: backstop not available for ratios 5.2 ... 10.1

N.B. When the anti-run back device operates very frequently make sure that the torque backdriving the gearbox does not exceed 70% of the rated torque M_{n2} for the captioned gear unit.

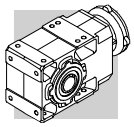

HDB

Certain gearboxes are available with increased overhung load ratings for use in applications characterised by high overhung loads beyond the capacity of the standard gearboxes. Specify the HDB option when ordering to obtain this increased overhung load capacity. The HDB option is available for gearbox sizes A10 to A50 with a single sided or through solid output shaft.
The following table specifies the maximum loads for HDB reinforced gearbox versions.
Figures refer to forces along the centreline of the output shaft.

(C 29)

HDB	R_{N2}					
	A 10	A 20	A 30	A 35	A 41	A 50
n_1 = 2800	**5500 N**	**6200 N**	**9600 N**	**12000 N**	**15000 N**	**20000 N**
⚠			8970 N @ i=5.4	10200 N @ i=5.4 10600 N @ i=6.4 11000 N @ i=7.0	11500 N @ i=5.2 12700 N @ i=7.1 13300 N @ i=8.3 13700 N @ i=9.2	19000 N @ i=7.7
n_1 = 1400	**5500 N**	**6200 N**	**9600 N**	**12000 N**	**15000 N**	**20000 N**
n_1 = 900	**5500 N**	**6200 N**	**9600 N**	**12000 N**	**15000 N**	**20000 N**
n_1 = 500	**5500 N**	**6200 N**	**9600 N**	**12000 N**	**15000 N**	**20000 N**

Reinforced bearings also allow these versions to withstand increased thrust loads, and in particular.

$$A_{N2} = 0.35 \times R_{n2} \quad (24)$$

In applications free from overhung load, thrust load capacity increases to:

$$A_{N2} = 0.70 \times R_{n2} \quad (25)$$

If load is applied simultaneously to both ends of a through output shaft, contact the Bonfiglioli Technical Service to verify the application.

IHB

For applications where the Rated torque M_{n2} - Torque demand M_{r2} gearbox's ratio:

$$\frac{M_{n2}}{M_{r2}} \leq 1.5$$

some gearboxes can be requested with bearings with increased load ratings by specifying the **IHB** option in the order.
The **IHB** option is available for all gearboxes supplied with IEC motor adaptor: P160 - P180 - P200.
It is advisable to contact the Bonfiglioli Technical Service to verify the application.

RB

Gear units A10, A20, A30, A35, A41, A50, A55 and A60, usually supplied with standard values of angular backlash, are, in this case, supplied with reduced angular backlash values (excludes gear units options AL and AR described in this paragraph).
The following table specifies the corresponding figures of angular backlash.

(C 30)

		standard		RB	
A05	i =	5.5_12.3 - ⛀(10.6)	10.6_91.6 - ⛀(12.3)	—	
	φ [']	**28**	**18**		
A10	i =	5.5_12.3 - ⛀(10.6)	10.6_91.6 - ⛀(12.3)	5.5_12.3 - ⛀(10.6)	10.6_91.6 - ⛀(12.3)
	φ [']	**27**	**17**	**12**	**8**
A20	i =	5.4_12 - ⛀(10.3)	10.3_380.9 - ⛀(12)	5.4_12 - ⛀(10.3)	10.3_380.9 - ⛀(12)
	φ [']	**23**	**15**	**11**	**7**
A30	i =	5.4_11.8 - ⛀(10.5)	10.5_400.8 - ⛀(11.8)	5.4_11.8 - ⛀(10.5)	10.5_400.8 - ⛀(11.8)
	φ [']	**22**	**15**	**10**	**7**
A35	i =	5.4_11.8	13.1_393.2	5.4_11.8	13.1_393.2
	φ [']	**20**	**11**	**9**	**6**
A41	i =	5.2_11.7 - ⛀(10.1)	10.1_376.8 - ⛀(11.7)	5.2-11.7 - ⛀(10.1)	10.1_376.8 - ⛀(11.7)
	φ [']	**19**	**13**	**9**	**6**
A50	i =	7.7_778.2		7.7_778.2	
	φ [']	**16**		**7**	
A55	i =	4.9_19.2	23.8_793	4.9_19.2	23.8_793
	φ [']	**17**	**11**	**8**	**6**
A60	i =	7.9_20.6	25.7_755.4	7.9_20.6	25.7_755.4
	φ [']	**12**	**9**	**5**	**4**
A70	i =	9.4_21.3	23.5_1715	—	
	φ [']	**14**	**12**		
A80	i =	9.8_20.9	22.6_1558	—	
	φ [']	**13**	**11**		
A90	i =	9.7_21	22.3_1632	—	
	φ [']	**12**	**10**		

For the delivery timeframe contact the Bonfiglioli's sales network

BP

Gearboxes, usually supplied with open breather plug, are supplied with a valve breather plug. The calibration of the valve can vary from 0,10 to 0,15 bar depending on the plug type. The valve opens at intervals and allows venting of internal pressure keeping out foreign bodies.
For option availability see chapter "Mounting positions and service plugs" of the Installation, Operation and Maintenance Manual (available at: www.bonfiglioli.com).

If needed contact Bonfiglioli Technical Service.

TA

Gearboxes A05…A60 are supplied with the torque arm assembled as shown.

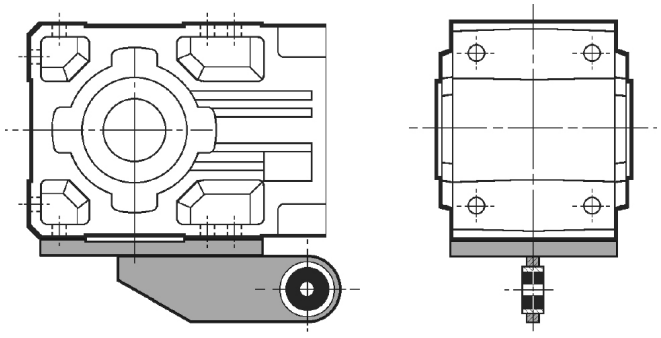

PROTECTION CAP

Gearboxes are supplied with a protection cap for the output axis (metallic material).
It is possible to request the torque arm mounted at several position as shown (SC1, SC2).

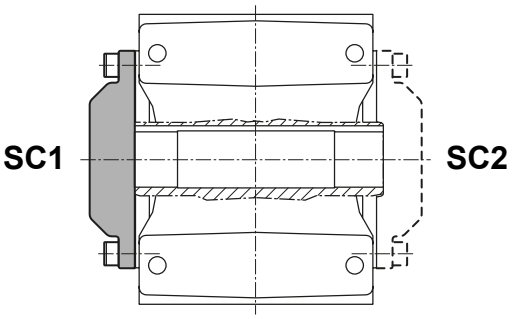

The applicability of the option PROTECTION CAP is described in the following table.

	PROTECTION CAP	
	SC1	SC2
A0.5...A90 UH...	X	X
A0.5...A90 UH...F1...	⛔	X
A0.5...A90 UH...F2...	X	⛔
A20...A60 UV...	X	X
A20...A60 UV...F1...	⛔	X
A20...A60 UV...F2...	X	⛔

LONG TERM STOCK

In presence of Long Term Stock option the configured product is supplied without the standard lubricant oil but with an anticorrosive protective liquid to grant the integrity and full functionality of the gear unit in those cases where the unit will not be installed immediately but it has to be stocked for a long period of time (installation later than 6 months from delivery).
The warranty conditions are valid 12 months from commissioning (with commissioning within 24 months from delivery) or 24 months from delivery without commissioning. After 2 years of stock, the unit with SL option needs to be checked by Bonfiglioli assistance center. In case of a product that is not properly preserved, an offer by Bonfiglioli will be issued for a complete restore. With the recovery activity successfully concluded, the warranty conditions restart from the 12 months of commissioning (with commissioning within 24 months from restore date) or 24 months from restore date

Applicability of Long Term Stock option:

Gearbox size	Applicability of Long Term Stock option
A05 ... A41	Only when oil lubrication options are not active (SO option is active)
A51 ... A90	Only when oil lubrication options are not active (LO, LH, LS, LK, LA, LB, LC, LD)

The Long Term Stock option can be requested in 2 versions:

- SLM Long Term Stock_Mineral Oil: option having anti-corrosive protective oil compatible with all mineral-based oil lubricants listed in the “Installation, operation and maintenance” Bonfiglioli manual (MUM).
- SLP Long Term Stock_Polyglycol Oil: option having anti-corrosive protective oil compatible with all polyglycol-based oil lubricants listed in the “Installation, operation and maintenance” Bonfiglioli manual (MUM).

Note: only one version can be selected. SLM and SLP can’t coexist.

When configuring a gear unit or gearmotor with Long Term Stock option, it is necessary to know the type of lubricating oil that will be used by the customer during the operating period (mineral or polyglycol oil).
Before commissioning a Bonfiglioli product with Long Term Stock option, make sure that the lubricating oil filling activity takes place through the specific filling plug determined by the mounting position indicated on the plate.
With regards to gear units with lifetime lubrication (see table below), the quantity of lubricating oil to top up is not indicated in the relevant “installation, use and maintenance” Bonfiglioli manual. In this case, if the Long Term Stock option is active, it is therefore necessary to contact the Bonfiglioli assistance center to receive this information.

Gearbox size	Lubricant charge quantity
A05 ... A41	BONFIGLIOLI TECHNICAL SERVICE
A51 ... C90	

SURFACE PROTECTION

When no specific protection class is requested, the painted (ferrous) surfaces of gearboxes are protected to at least corrosivity class C2 (UNI EN ISO 12944-2). For improved resistance to atmospheric corrosion, gearboxes can be delivered with **C3** and **C4** surface protection, obtained by painting the complete gearbox.

(C 31)

SURFACE PROTECTION	Typical environments	Maximum surface temperature	Corrosivity class according to UNI EN ISO 12944-2
C3	Urban and industrial environments with up to 100% relative humidity (medium air pollution)	120°C	C3
C4	Industrial areas, coastal areas, chemical plant, with up to 100% relative humidity (high air pollution)	120°C	C4

Gearboxes with optional protection to class **C3** or **C4** are available in a choice of colours.
If no specific colour is requested (see the “PAINTING” option) gearboxes are finished in RAL 7042.
Gearboxes can also be supplied with surface protection for corrosivity class **C5** according to UNI EN ISO 12944-2. Contact our Technical Service for further details.

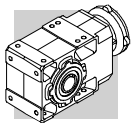

PAINTING

Gearboxes with optional protection to class C3 or C4 are available in the colours listed in the following table.

(C 32)

PAINTING	Colour	RAL number
RAL7042*	Traffik Grey A	7042
RAL5010	Gentian Blue	5010
RAL9005	Jet Black	9005
RAL9006	White Aluminium	9006
RAL9010	Pure White	9010
RAL7035	Light Grey	7035
RAL7001	Silver Grey	7001
RAL5015	Sky Blue	5015
RAL7037	Dusty Grey	7037
RAL5024	Pastel Blue	5024

* Gearboxes are supplied in this standard colour if no other colour is specified.

NOTE – “PAINTING” options can only be specified in conjunction with “SURFACE PROTECTION” options.

CERTIFICATES

AC - Certificate of compliance
The document certifies the compliance of the product with the purchase order and the construction in conformity with the applicable procedures of the Bonfiglioli Quality System.

CC - Inspection certificate
The document entails checking on order compliance, the visual inspection of external conditions and of mating dimensions. Checking on main functional parameters in unloaded conditions is also performed along with oil seal proofing, both in static and in running conditions. Units inspected are sampled within the shipping batch and marked individually.

33.3 Motor options

AL, AR

The backstop option is available for M, ME and MX motors and it is not compatible with the corresponding gearbox option.
When ordering the gear unit, the direction of free rotation must be specified through either the AR or the AL option. The following table (C34) shows the gearboxes in which the anti-run back device can be installed and supports the selection of AR or AL option, based on the desired direction of free rotation at the gearbox output shaft (clockwise or counter-clockwise).

(C 34)

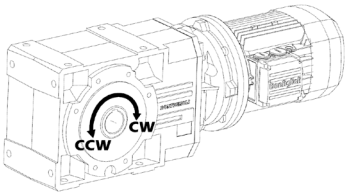

Option to select based on the required direction of free rotation at gearbox output shaft
The table refers to the gearbox in mounting position B3, on left side seen from motor side (see picture).
(CW: clockwise, CCW: counterclockwise)

	CW			CCW		
	2x	3x	4x	2x	3x	4x
05	AL			AR		
10	AL			AR		
20	AL	AR		AR	AL	
30	AL	AR		AR	AL	
35	AL	AR		AR	AL	
41	AL	AR		AR	AL	
50	AL	AR	AL	AR	AL	AR
55	AR	AR	AL	AL	AL	AR
60	AL	AL	AR	AR	AR	AL
70		AL	AR		AR	AL
80		AL	AR		AR	AL
90		AL	AR		AR	AL

For further information on this option, consult the electric motors section.

34 MOUNTING POSITION AND TERMINAL BOX ANGULAR LOCATION

Location of motor terminal box can be specified by viewing the motor from the fan side; standard location is shown in black (W).

Angular location of the brake release lever.

Unless otherwise specified, brake motors have the manual device side located, 90° apart from terminal box. Different angles can be specified through the relevant options available.

(C 33)

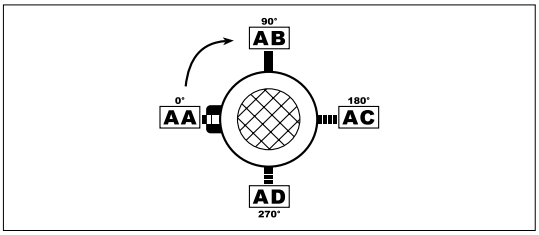

A ...

B3

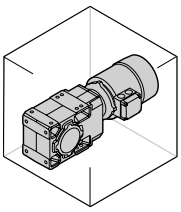
_S

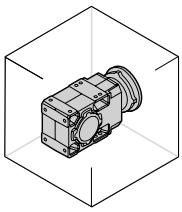
_P(IEC) _SK / _SC

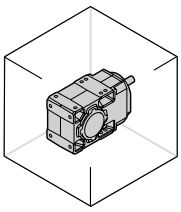
_HS

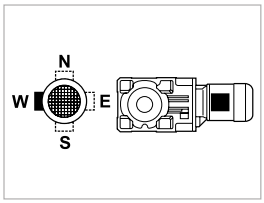

B6

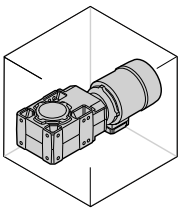
_S

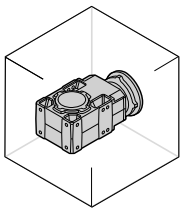
_P(IEC) _SK / _SC

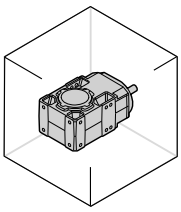
_HS

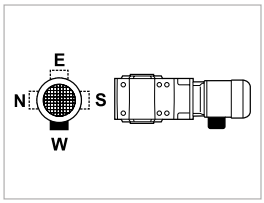

B7

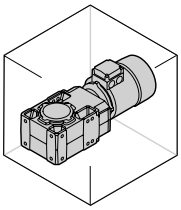
_S

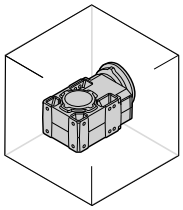
_P(IEC) _SK / _SC

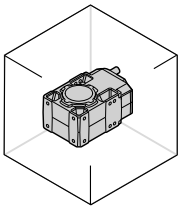
_HS

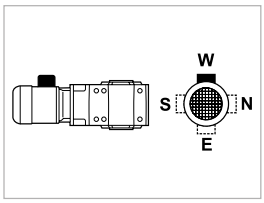

B8

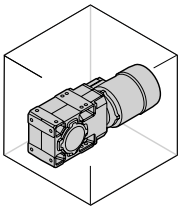
_S

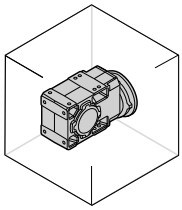
_P(IEC) _SK / _SC

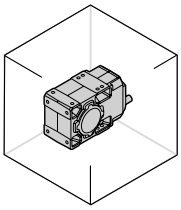
_HS

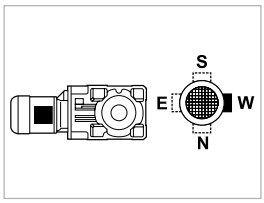

VA

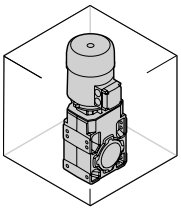
_S

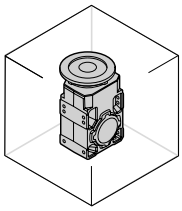
_P(IEC) _SK / _SC

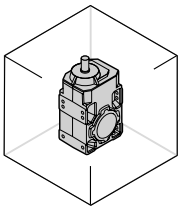
_HS

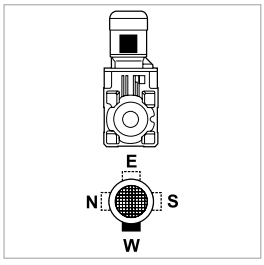

VB

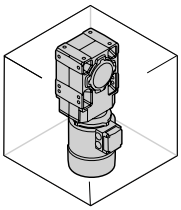
_S

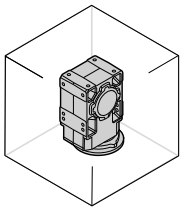
_P(IEC) _SK / _SC

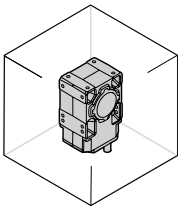
_HS

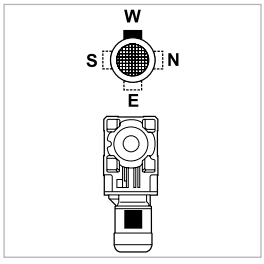

W = Default

35 OVERHUNG LOADS

External transmissions keyed onto input and/or output shaft generate loads that act radially onto same shaft.
Resulting shaft loading must be compatible with both the bearing and the shaft capacity. Namely shaft loading (R_{c1} for input shaft, R_{c2} for output shaft), must be equal or lower than admissible overhung load capacity for shaft under study (R_{n1} for input shaft, R_{n2} for output shaft). OHL capability listed in the rating chart section.
In the formulas given below, index (1) applies to parameters relating to input shaft, whereas index (2) refers to output shaft.
The load generated by an external transmission can be calculated with close approximation by the following equations:

$$R_{c1}\,[N] = \frac{2000 \cdot M_1[Nm] \cdot K_r}{d\,[mm]} \quad ; \quad R_{c2}\,[N] = \frac{2000 \cdot M_2[Nm] \cdot K_r}{d\,[mm]} \qquad (26)$$

(C 35)

M_1 [Nm]	Torque applied to input shaft
M_2 [Nm]	Torque drawn at output shaft
d [mm]	Pitch diameter of element keyed onto shaft
K_r = 1	Chain transmission

K_r = 1,25	Gear transmission
K_r = 1,5	V-belt transmission
K_r = 2,0	Flat belt transmission

Verification of OHL capability varies depending on whether load applies at midpoint of shaft or it is shifted further out:

(C 36)

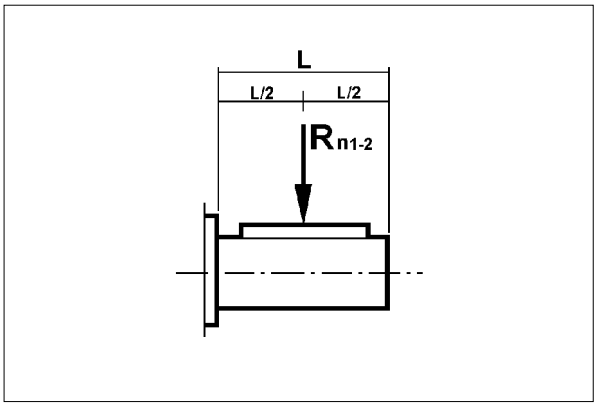

(C 37)

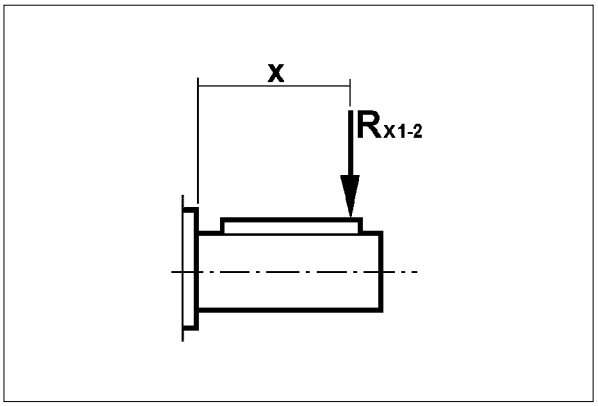

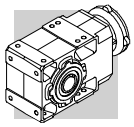

a) Load applied at midpoint of shaft, tab. (C36)

A comparison of shaft loading with catalogue OHL ratings should verify the following condition:

Rc1 ≤ Rn1 [input shaft]

or

Rc2 ≤ Rn2 [output shaft]

b) Load off the midpoint tab. (C37)

When load is shifted at an “x” distance from shaft shoulder, permissible load must be calculated for that distance.
Revised permissible overhung loads Rx1 (input) and Rx2 (output) are calculated respectively from original rated values Rn1 and Rn2 through factor:

$$\frac{a}{b+x} \qquad (27)$$

(C 38)

	Load location factors					
	Output shaft			Input shaft		
	a	**b**	**c**	**a**	**b**	**c**
A 05 2	116	86	450	—	—	—
A 10 2	123	101	600	21	1	300
A 20 2	150	120	750	40	20	350
A 20 3	150	120	750	21	1	300
A 30 2	168	138	900	38.5	18.5	350
A 30 3	168	138	900	21	1	300
A 35 2	182.5	147.5	950	38.5	18.5	350
A 35 3	182.5	147.5	950	21	1	300
A 41 2	198	158	1050	49.5	24.5	450
A 41 3	198	158	1050	40	20	350
A 50 2 - A 50 3	242.5	201.5	1300	49.5	24.5	450
A 50 4	242.5	201.5	1300	38.5	18.5	350
A 55 2 - A 55 3	231.5	179	1300	49.5	24.5	450
A 55 4	231.5	179	1300	38.5	18.5	350
A 60 2 - A 60 3	242.5	190	1550	55.5	25.5	600
A 60 4	242.5	190	1550	49.5	24.5	450
A 70 3	295.5	230.5	1900	86	31	1000
A 70 4	295.5	230.5	1900	49.5	24.5	450
A 80 3	345	280	2400	86	31	1000
A 80 4	345	280	2400	49.5	24.5	450
A 90 3	432	327	3000	116	46	1400
A 90 4	432	327	3000	49.5	24.5	450

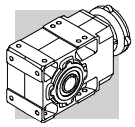

Verification procedure is described here after.

INPUT SHAFT

1. Calculate:

$$R_{x1} = R_{n1} \cdot \frac{a}{b + x} \qquad (28)$$

N.B. Subject to condition:

$$\frac{L}{2} \leq x \leq c \qquad (29)$$

Finally, the following condition must be verified:

$$R_{c1} \leq R_{x1} \qquad (30)$$

OUTPUT SHAFT

1. Calculate:

$$R_{x2} = R_{n2} \cdot \frac{a}{b + x} \qquad (31)$$

N.B. Subject to condition:

$$\frac{L}{2} \leq x \leq c \qquad (32)$$

Finally, the following condition must be verified:

$$R_{c2} \leq R_{x2} \qquad (33)$$

36 THRUST LOADS, A_{n1}, A_{n2}

Permissible thrust loads on input [A_{n1}] and output [A_{n2}] shafts are obtained from the radial loading for the shaft under consideration [R_{n1}] and [R_{n2}] through the following equation:

$$A_{n1} = R_{n1} \cdot 0.2$$
$$A_{n2} = R_{n2} \cdot 0.2 \qquad (34)$$

The thrust loads calculated through these formulas apply to thrust forces occurring at the same time as rated radial loads.
In the only case that no overhung load acts on the shaft the value of the admissible thrust load [A_n] amounts to 50% of rated OHL [R_n] on same shaft.
Where thrust loads exceed permissible value or largely prevail over radial loads, contact Bonfiglioli Riduttori for an in-depth analysis of the application.

37 SHAFTS ARRANGEMENT

The following table shows standard directions of rotation for 2, 3 and 4 stage helical-bevel gearboxes.

(C 39)

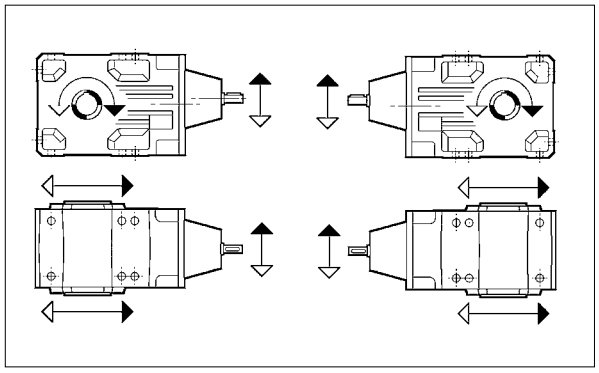

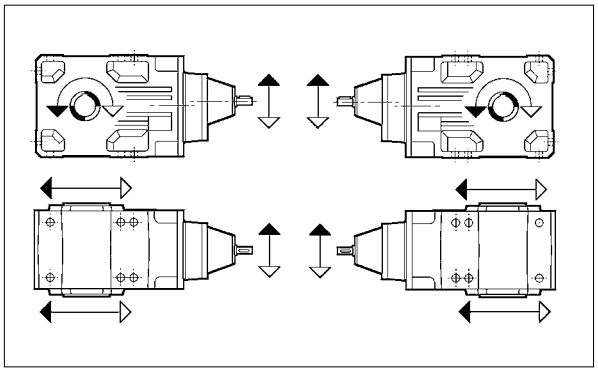

2x	A 05	A 10	A 20	A 30	A 35	A 41	A 50	A 60
3x	A 60	A 70	A 80	A 90				
4x	A 50	A 55						

2x	A 55					
3x	A 20	A 30	A 35	A 41	A 50	A 55
4x	A 60	A 70	A 80	A 90		

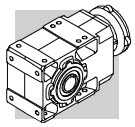

38 GEARMOTOR RATING CHARTS

0.12 kW

n_2 min^{-1}	M_2 Nm	S	i	R_{n2} N	IE2	IE3		IEC IE2	IEC IE3	
1.7	588	2.5	778.2	20000				**A504_778.2 P63 BE63A4**	**A504_778.2 P63 BX63A4**	347
1.9	535	2.8	707.9	20000				**A504_707.9 P63 BE63A4**	**A504_707.9 P63 BX63A4**	347
2.1	477	3.1	631.2	20000				**A504_631.2 P63 BE63A4**	**A504_631.2 P63 BX63A4**	347
2.4	434	3.5	574.2	20000				**A504_574.2 P63 BE63A4**	**A504_574.2 P63 BX63A4**	347
3.4	310	1.2	400.8	9600	**A303_400.8 S05 ME05A4**	**A303_400.8 S05 MX05A4**	334	**A303_400.8 P63 BE63A4**	**A303_400.8 P63 BX63A4**	335
3.4	304	1.5	393.2	12000	**A353_393.2 S05 ME05A4**	**A353_393.2 S05 MX05A4**	338	**A353_393.2 P63 BE63A4**	**A353_393.2 P63 BX63A4**	339
3.6	291	2.9	376.8	15000	**A413_376.8 S05 ME05A4**	**A413_376.8 S05 MX05A4**	342	**A413_376.8 P63 BE63A4**	**A413_376.8 P63 BX63A4**	343
3.8	275	1.3	356.3	9600	**A303_356.3 S05 ME05A4**	**A303_356.3 S05 MX05A4**	334	**A303_356.3 P63 BE63A4**	**A303_356.3 P63 BX63A4**	335
4.0	262	2.0	339.3	12000	**A353_339.3 S05 ME05A4**	**A353_339.3 S05 MX05A4**	338	**A353_339.3 P63 BE63A4**	**A353_339.3 P63 BX63A4**	339
4.1	255	1.0	329.4	6200	**A203_329.4 S05 ME05A4**	**A203_329.4 S05 MX05A4**	330	**A203_329.4 P63 BE63A4**	**A203_329.4 P63 BX63A4**	331
4.2	251	3.4	324.2	15000	**A413_324.2 S05 ME05A4**	**A413_324.2 S05 MX05A4**	342	**A413_324.2 P63 BE63A4**	**A413_324.2 P63 BX63A4**	343
4.3	243	1.6	314.5	9600	**A303_314.5 S05 ME05A4**	**A303_314.5 S05 MX05A4**	334	**A303_314.5 P63 BE63A4**	**A303_314.5 P63 BX63A4**	335
4.4	236	2.5	305.4	12000	**A353_305.4 S05 ME05A4**	**A353_305.4 S05 MX05A4**	338	**A353_305.4 P63 BE63A4**	**A353_305.4 P63 BX63A4**	339
4.6	226	1.1	292.8	6200	**A203_292.8 S05 ME05A4**	**A203_292.8 S05 MX05A4**	330	**A203_292.8 P63 BE63A4**	**A203_292.8 P63 BX63A4**	331
5.0	210	1.8	271.5	9600	**A303_271.5 S05 ME05A4**	**A303_271.5 S05 MX05A4**	334	**A303_271.5 P63 BE63A4**	**A303_271.5 P63 BX63A4**	335
5.0	209	2.9	270.7	12000	**A353_270.7 S05 ME05A4**	**A353_270.7 S05 MX05A4**	338	**A353_270.7 P63 BE63A4**	**A353_270.7 P63 BX63A4**	339
5.2	201	1.2	260.5	6200	**A203_260.5 S05 ME05A4**	**A203_260.5 S05 MX05A4**	330	**A203_260.5 P63 BE63A4**	**A203_260.5 P63 BX63A4**	331
5.4	192	3.1	248.1	12000	**A353_248.1 S05 ME05A4**	**A353_248.1 S05 MX05A4**	338	**A353_248.1 P63 BE63A4**	**A353_248.1 P63 BX63A4**	339
5.5	189	2.0	244.3	9600	**A303_244.3 S05 ME05A4**	**A303_244.3 S05 MX05A4**	334	**A303_244.3 P63 BE63A4**	**A303_244.3 P63 BX63A4**	335
6.0	172	3.5	223.2	12000	**A353_223.2 S05 ME05A4**	**A353_223.2 S05 MX05A4**	338	**A353_223.2 P63 BE63A4**	**A353_223.2 P63 BX63A4**	339
6.1	171	1.5	221.3	6200	**A203_221.3 S05 ME05A4**	**A203_221.3 S05 MX05A4**	330	**A203_221.3 P63 BE63A4**	**A203_221.3 P63 BX63A4**	331
6.2	167	2.2	216.6	9600	**A303_216.6 S05 ME05A4**	**A303_216.6 S05 MX05A4**	334	**A303_216.6 P63 BE63A4**	**A303_216.6 P63 BX63A4**	335
6.8	154	1.6	199.2	6200	**A203_199.2 S05 ME05A4**	**A203_199.2 S05 MX05A4**	330	**A203_199.2 P63 BE63A4**	**A203_199.2 P63 BX63A4**	331
6.8	153	2.3	198.5	9600	**A303_198.5 S05 ME05A4**	**A303_198.5 S05 MX05A4**	334	**A303_198.5 P63 BE63A4**	**A303_198.5 P63 BX63A4**	335
7.6	138	2.5	178.5	9600	**A303_178.5 S05 ME05A4**	**A303_178.5 S05 MX05A4**	334	**A303_178.5 P63 BE63A4**	**A303_178.5 P63 BX63A4**	335
7.6	138	1.8	178.3	6200	**A203_178.3 S05 ME05A4**	**A203_178.3 S05 MX05A4**	330	**A203_178.3 P63 BE63A4**	**A203_178.3 P63 BX63A4**	331
8.3	126	1.9	163.4	6200	**A203_163.4 S05 ME05A4**	**A203_163.4 S05 MX05A4**	330	**A203_163.4 P63 BE63A4**	**A203_163.4 P63 BX63A4**	331
8.4	125	2.7	161.4	9600	**A303_161.4 S05 ME05A4**	**A303_161.4 S05 MX05A4**	334	**A303_161.4 P63 BE63A4**	**A303_161.4 P63 BX63A4**	335
9.0	116	2.8	150.7	9600	**A303_150.7 S05 ME05A4**	**A303_150.7 S05 MX05A4**	334	**A303_150.7 P63 BE63A4**	**A303_150.7 P63 BX63A4**	335
9.2	113	2.0	146.1	6200	**A203_146.1 S05 ME05A4**	**A203_146.1 S05 MX05A4**	330	**A203_146.1 P63 BE63A4**	**A203_146.1 P63 BX63A4**	331
9.8	106	3.0	137.4	9600	**A303_137.4 S05 ME05A4**	**A303_137.4 S05 MX05A4**	334	**A303_137.4 P63 BE63A4**	**A303_137.4 P63 BX63A4**	335
10.5	100	2.2	129.1	6200	**A203_129.1 S05 ME05A4**	**A203_129.1 S05 MX05A4**	330	**A203_129.1 P63 BE63A4**	**A203_129.1 P63 BX63A4**	331
11.2	93	2.3	120.5	6200	**A203_120.5 S05 ME05A4**	**A203_120.5 S05 MX05A4**	330	**A203_120.5 P63 BE63A4**	**A203_120.5 P63 BX63A4**	331
11.2	93	3.2	120.5	9600	**A303_120.5 S05 ME05A4**	**A303_120.5 S05 MX05A4**	334	**A303_120.5 P63 BE63A4**	**A303_120.5 P63 BX63A4**	335
12.4	84	2.4	109.2	6200	**A203_109.2 S05 ME05A4**	**A203_109.2 S05 MX05A4**	330	**A203_109.2 P63 BE63A4**	**A203_109.2 P63 BX63A4**	331
14.6	74	2.7	92.3	6200	**A202_92.3 S05 ME05A4**	**A202_92.3 S05 MX05A4**	330	**A202_92.3 P63 BE63A4**	**A202_92.3 P63 BX63A4**	331
14.7	73	1.4	91.6	4420	**A052_91.6 S05 ME05A4**	**A052_91.6 S05 MX05A4**	323	**A052_91.6 P63 BE63A4**	**A052_91.6 P63 BX63A4**	323
14.7	73	1.8	91.6	5500	**A102_91.6 S05 ME05A4**	**A102_91.6 S05 MX05A4**	326	**A102_91.6 P63 BE63A4**	**A102_91.6 P63 BX63A4**	327
16.9	64	3.3	79.9	6200	**A202_79.9 S05 ME05A4**	**A202_79.9 S05 MX05A4**	330	**A202_79.9 P63 BE63A4**	**A202_79.9 P63 BX63A4**	331
17.7	61	1.6	76.4	4230	**A052_76.4 S05 ME05A4**	**A052_76.4 S05 MX05A4**	323	**A052_76.4 P63 BE63A4**	**A052_76.4 P63 BX63A4**	323
17.7	61	2.5	76.4	5500	**A102_76.4 S05 ME05A4**	**A102_76.4 S05 MX05A4**	326	**A102_76.4 P63 BE63A4**	**A102_76.4 P63 BX63A4**	327
20.5	53	1.9	65.9	4070	**A052_65.9 S05 ME05A4**	**A052_65.9 S05 MX05A4**	323	**A052_65.9 P63 BE63A4**	**A052_65.9 P63 BX63A4**	323
20.5	53	2.8	65.9	5500	**A102_65.9 S05 ME05A4**	**A102_65.9 S05 MX05A4**	326	**A102_65.9 P63 BE63A4**	**A102_65.9 P63 BX63A4**	327
23.0	47	2.1	58.6	3950	**A052_58.6 S05 ME05A4**	**A052_58.6 S05 MX05A4**	323	**A052_58.6 P63 BE63A4**	**A052_58.6 P63 BX63A4**	323
23.0	47	3.2	58.6	5500	**A102_58.6 S05 ME05A4**	**A102_58.6 S05 MX05A4**	326	**A102_58.6 P63 BE63A4**	**A102_58.6 P63 BX63A4**	327
26.3	41	2.4	51.3	3810	**A052_51.3 S05 ME05A4**	**A052_51.3 S05 MX05A4**	323	**A052_51.3 P63 BE63A4**	**A052_51.3 P63 BX63A4**	323
29.7	36	2.8	45.4	3680	**A052_45.4 S05 ME05A4**	**A052_45.4 S05 MX05A4**	323	**A052_45.4 P63 BE63A4**	**A052_45.4 P63 BX63A4**	323
33.0	33	3.1	40.9	3570	**A052_40.9 S05 ME05A4**	**A052_40.9 S05 MX05A4**	323	**A052_40.9 P63 BE63A4**	**A052_40.9 P63 BX63A4**	323
38.0	28	3.6	35.1	3420	**A052_35.1 S05 ME05A4**	**A052_35.1 S05 MX05A4**	323	**A052_35.1 P63 BE63A4**	**A052_35.1 P63 BX63A4**	323
42.0	26	3.9	32.2	3340	**A052_32.2 S05 ME05A4**	**A052_32.2 S05 MX05A4**	323	**A052_32.2 P63 BE63A4**	**A052_32.2 P63 BX63A4**	323
47.0	23	4.4	28.6	3220	**A052_28.6 S05 ME05A4**	**A052_28.6 S05 MX05A4**	323	**A052_28.6 P63 BE63A4**	**A052_28.6 P63 BX63A4**	323
53.0	20	4.9	25.5	3110	**A052_25.5 S05 ME05A4**	**A052_25.5 S05 MX05A4**	323	**A052_25.5 P63 BE63A4**	**A052_25.5 P63 BX63A4**	323
57.0	19	5.3	23.8	3050	**A052_23.8 S05 ME05A4**	**A052_23.8 S05 MX05A4**	323	**A052_23.8 P63 BE63A4**	**A052_23.8 P63 BX63A4**	323
63.0	17	5.9	21.4	2950	**A052_21.4 S05 ME05A4**	**A052_21.4 S05 MX05A4**	323	**A052_21.4 P63 BE63A4**	**A052_21.4 P63 BX63A4**	323
73.0	15	6.7	18.6	2830	**A052_18.6 S05 ME05A4**	**A052_18.6 S05 MX05A4**	323	**A052_18.6 P63 BE63A4**	**A052_18.6 P63 BX63A4**	323
82.0	13	7.6	16.4	2730	**A052_16.4 S05 ME05A4**	**A052_16.4 S05 MX05A4**	323	**A052_16.4 P63 BE63A4**	**A052_16.4 P63 BX63A4**	323
97.0	11	9.0	13.9	2590	**A052_13.9 S05 ME05A4**	**A052_13.9 S05 MX05A4**	323	**A052_13.9 P63 BE63A4**	**A052_13.9 P63 BX63A4**	323

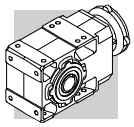

0.12 kW

n_2 min-1	M_2 Nm	S	i	R_{n2} N	IE2	IE3		IEC IE2	IEC IE3	
110.0	10	10.2	12.3	2500	**A052_12.3 S05 ME05A4**	**A052_12.3 S05 MX05A4**	323	**A052_12.3 P63 BE63A4**	**A052_12.3 P63 BX63A4**	323
128.0	8	11.9	10.6	2380	**A052_10.6 S05 ME05A4**	**A052_10.6 S05 MX05A4**	323	**A052_10.6 P63 BE63A4**	**A052_10.6 P63 BX63A4**	323
140.0	8	13.0	9.6	2310	**A052_9.6 S05 ME05A4**	**A052_9.6 S05 MX05A4**	323	**A052_9.6 P63 BE63A4**	**A052_9.6 P63 BX63A4**	323
159.0	7	14.7	8.5	2220	**A052_8.5 S05 ME05A4**	**A052_8.5 S05 MX05A4**	323	**A052_8.5 P63 BE63A4**	**A052_8.5 P63 BX63A4**	323
187.0	6	17.4	7.2	2110	**A052_7.2 S05 ME05A4**	**A052_7.2 S05 MX05A4**	323	**A052_7.2 P63 BE63A4**	**A052_7.2 P63 BX63A4**	323
213	5.1	19.8	6.3	2020	**A052_6.3 S05 ME05A4**	**A052_6.3 S05 MX05A4**	323	**A052_6.3 P63 BE63A4**	**A052_6.3 P63 BX63A4**	323
247	4.4	21.8	5.5	1930	**A052_5.5 S05 ME05A4**	**A052_5.5 S05 MX05A4**	323	**A052_5.5 P63 BE63A4**	**A052_5.5 P63 BX63A4**	323

0.12 kW

n_2 min-1	M_2 Nm	S	i	R_{n2} N	IE3		IEC IE3	
1.7	588.0	2.5	778.2	20000			**A504_778.2 P63 BXN63MA4**	347
1.9	535.0	2.8	707.9	20000			**A504_707.9 P63 BXN63MA4**	347
2.1	477.0	3.1	631.2	20000			**A504_631.2 P63 BXN63MA4**	347
2.4	434.0	3.5	574.2	20000			**A504_574.2 P63 BXN63MA4**	347
3.4	310.0	1.2	400.8	9600	**A303_400.8 SX05 MXN05MA4**	334	**A303_400.8 P63 BXN63MA4**	335
3.4	304.0	1.5	393.2	12000	**A353_393.2 SX05 MXN05MA4**	338	**A353_393.2 P63 BXN63MA4**	339
3.6	291.0	2.9	376.8	15000	**A413_376.8 SX05 MXN05MA4**	342	**A413_376.8 P63 BXN63MA4**	343
3.8	275.0	1.3	356.3	9600	**A303_356.3 SX05 MXN05MA4**	334	**A303_356.3 P63 BXN63MA4**	335
4.0	262.0	2.0	339.3	12000	**A353_339.3 SX05 MXN05MA4**	338	**A353_339.3 P63 BXN63MA4**	339
4.1	255.0	1.0	329.4	6200	**A203_329.4 SX05 MXN05MA4**	330	**A203_329.4 P63 BXN63MA4**	331
4.2	251.0	3.4	324.2	15000	**A413_324.2 SX05 MXN05MA4**	342	**A413_324.2 P63 BXN63MA4**	343
4.3	243.0	1.6	314.5	9600	**A303_314.5 SX05 MXN05MA4**	334	**A303_314.5 P63 BXN63MA4**	335
4.4	236.0	2.5	305.4	12000	**A353_305.4 SX05 MXN05MA4**	338	**A353_305.4 P63 BXN63MA4**	339
4.6	226.0	1.1	292.8	6200	**A203_292.8 SX05 MXN05MA4**	330	**A203_292.8 P63 BXN63MA4**	331
5.0	210.0	1.8	271.5	9600	**A303_271.5 SX05 MXN05MA4**	334	**A303_271.5 P63 BXN63MA4**	335
5.0	209.0	2.9	270.7	12000	**A353_270.7 SX05 MXN05MA4**	338	**A353_270.7 P63 BXN63MA4**	339
5.2	201.0	1.2	260.5	6200	**A203_260.5 SX05 MXN05MA4**	330	**A203_260.5 P63 BXN63MA4**	331
5.4	192.0	3.1	248.1	12000	**A353_248.1 SX05 MXN05MA4**	338	**A353_248.1 P63 BXN63MA4**	339
5.5	189.0	2.0	244.3	9600	**A303_244.3 SX05 MXN05MA4**	334	**A303_244.3 P63 BXN63MA4**	335
6.0	172.0	3.5	223.2	12000	**A353_223.2 SX05 MXN05MA4**	338	**A353_223.2 P63 BXN63MA4**	339
6.1	171.0	1.5	221.3	6200	**A203_221.3 SX05 MXN05MA4**	330	**A203_221.3 P63 BXN63MA4**	331
6.2	167.0	2.2	216.6	9600	**A303_216.6 SX05 MXN05MA4**	334	**A303_216.6 P63 BXN63MA4**	335
6.8	154.0	1.6	199.2	6200	**A203_199.2 SX05 MXN05MA4**	330	**A203_199.2 P63 BXN63MA4**	331
6.8	153.0	2.3	198.5	9600	**A303_198.5 SX05 MXN05MA4**	334	**A303_198.5 P63 BXN63MA4**	335
7.6	138.0	2.5	178.5	9600	**A303_178.5 SX05 MXN05MA4**	334	**A303_178.5 P63 BXN63MA4**	335
7.6	138.0	1.8	178.3	6200	**A203_178.3 SX05 MXN05MA4**	330	**A203_178.3 P63 BXN63MA4**	331
8.3	126.0	1.9	163.4	6200	**A203_163.4 SX05 MXN05MA4**	330	**A203_163.4 P63 BXN63MA4**	331
8.4	125.0	2.7	161.4	9600	**A303_161.4 SX05 MXN05MA4**	334	**A303_161.4 P63 BXN63MA4**	335
9.0	116.0	2.8	150.7	9600	**A303_150.7 SX05 MXN05MA4**	334	**A303_150.7 P63 BXN63MA4**	335
9.2	113.0	2.0	146.1	6200	**A203_146.1 SX05 MXN05MA4**	330	**A203_146.1 P63 BXN63MA4**	331
9.8	106.0	3.0	137.4	9600	**A303_137.4 SX05 MXN05MA4**	334	**A303_137.4 P63 BXN63MA4**	335
10.5	100.0	2.2	129.1	6200	**A203_129.1 SX05 MXN05MA4**	330	**A203_129.1 P63 BXN63MA4**	331
11.2	93.0	2.3	120.5	6200	**A203_120.5 SX05 MXN05MA4**	330	**A203_120.5 P63 BXN63MA4**	331
11.2	93.0	3.2	120.5	9600	**A303_120.5 SX05 MXN05MA4**	334	**A303_120.5 P63 BXN63MA4**	335
12.4	84.0	2.4	109.2	6200	**A203_109.2 SX05 MXN05MA4**	330	**A203_109.2 P63 BXN63MA4**	331
14.6	74.0	2.7	92.3	6200	**A202_92.3 SX05 MXN05MA4**	330	**A202_92.3 P63 BXN63MA4**	331
14.7	73.0	1.4	91.6	4420	**A052_91.6 SX05 MXN05MA4**	323	**A052_91.6 P63 BXN63MA4**	323
14.7	73.0	1.8	91.6	5500	**A102_91.6 SX05 MXN05MA4**	326	**A102_91.6 P63 BXN63MA4**	327
16.9	64.0	3.3	79.9	6200	**A202_79.9 SX05 MXN05MA4**	330	**A202_79.9 P63 BXN63MA4**	331
17.7	61.0	1.6	76.4	4230	**A052_76.4 SX05 MXN05MA4**	323	**A052_76.4 P63 BXN63MA4**	323
17.7	61.0	2.5	76.4	5500	**A102_76.4 SX05 MXN05MA4**	326	**A102_76.4 P63 BXN63MA4**	327
20.5	53.0	1.9	65.9	4070	**A052_65.9 SX05 MXN05MA4**	323	**A052_65.9 P63 BXN63MA4**	323

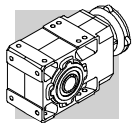

0.12 kW

n_2 min-1	M_2 Nm	S	i	R_{n2} N	IE3		IEC IE3	
20.5	53.0	2.8	65.9	5500	**A102_65.9 SX05 MXN05MA4**	326	**A102_65.9 P63 BXN63MA4**	327
23.0	47.0	2.1	58.6	3950	**A052_58.6 SX05 MXN05MA4**	323	**A052_58.6 P63 BXN63MA4**	323
23.0	47.0	3.2	58.6	5500	**A102_58.6 SX05 MXN05MA4**	326	**A102_58.6 P63 BXN63MA4**	327
26.3	41.0	2.4	51.3	3810	**A052_51.3 SX05 MXN05MA4**	323	**A052_51.3 P63 BXN63MA4**	323
29.7	36.0	2.8	45.4	3680	**A052_45.4 SX05 MXN05MA4**	323	**A052_45.4 P63 BXN63MA4**	323
33.0	33.0	3.1	40.9	3570	**A052_40.9 SX05 MXN05MA4**	323	**A052_40.9 P63 BXN63MA4**	323
38.0	28.0	3.6	35.1	3420	**A052_35.1 SX05 MXN05MA4**	323	**A052_35.1 P63 BXN63MA4**	323
42.0	26.0	3.9	32.2	3340	**A052_32.2 SX05 MXN05MA4**	323	**A052_32.2 P63 BXN63MA4**	323
47.0	23.0	4.4	28.6	3220	**A052_28.6 SX05 MXN05MA4**	323	**A052_28.6 P63 BXN63MA4**	323
53.0	20.0	4.9	25.5	3110	**A052_25.5 SX05 MXN05MA4**	323	**A052_25.5 P63 BXN63MA4**	323
57.0	19.0	5.3	23.8	3050	**A052_23.8 SX05 MXN05MA4**	323	**A052_23.8 P63 BXN63MA4**	323
63.0	17.1	5.9	21.4	2950	**A052_21.4 SX05 MXN05MA4**	323	**A052_21.4 P63 BXN63MA4**	323
73.0	14.8	6.7	18.6	2830	**A052_18.6 SX05 MXN05MA4**	323	**A052_18.6 P63 BXN63MA4**	323
82.0	13.1	7.6	16.4	2730	**A052_16.4 SX05 MXN05MA4**	323	**A052_16.4 P63 BXN63MA4**	323
97.0	11.1	9.0	13.9	2590	**A052_13.9 SX05 MXN05MA4**	323	**A052_13.9 P63 BXN63MA4**	323
110.0	9.8	10.2	12.3	2500	**A052_12.3 SX05 MXN05MA4**	323	**A052_12.3 P63 BXN63MA4**	323
128.0	8.4	11.9	10.6	2380	**A052_10.6 SX05 MXN05MA4**	323	**A052_10.6 P63 BXN63MA4**	323
140.0	7.7	13.0	9.6	2310	**A052_9.6 SX05 MXN05MA4**	323	**A052_9.6 P63 BXN63MA4**	323
159.0	6.8	14.7	8.5	2220	**A052_8.5 SX05 MXN05MA4**	323	**A052_8.5 P63 BXN63MA4**	323
187.0	5.8	17.4	7.2	2110	**A052_7.2 SX05 MXN05MA4**	323	**A052_7.2 P63 BXN63MA4**	323
213.0	5.1	19.8	6.3	2020	**A052_6.3 SX05 MXN05MA4**	323	**A052_6.3 P63 BXN63MA4**	323
247.0	4.4	21.8	5.5	1930	**A052_5.5 SX05 MXN05MA4**	323	**A052_5.5 P63 BXN63MA4**	323

0.18 kW

n_2 min-1	M_2 Nm	S	i	R_{n2} N	IE2	IE3		IEC IE2	IEC IE3	
0.8	1989.0	2.5	1715.0	50000				**A704_1715 P63 BE63B4**	**A704_1715 P63 BX63B4**	359
0.8	1836.0	2.7	1583.0	50000				**A704_1583 P63 BE63B4**	**A704_1583 P63 BX63B4**	359
1.0	1561.0	3.2	1346.0	50000				**A704_1346 P63 BE63B4**	**A704_1346 P63 BX63B4**	359
1.1	1441.0	3.5	1242.0	50000				**A704_1242 P63 BE63B4**	**A704_1242 P63 BX63B4**	359
1.7	902.0	1.7	778.2	20000				**A504_778.2 P63 BE63B4**	**A504_778.2 P63 BX63B4**	347
1.7	876.0	3.2	755.4	30000				**A604_755.4 P63 BE63B4**	**A604_755.4 P63 BX63B4**	355
1.9	821.0	1.8	707.9	20000				**A504_707.9 P63 BE63B4**	**A504_707.9 P63 BX63B4**	347
1.9	809.0	3.5	697.3	30000				**A604_697.3 P63 BE63B4**	**A604_697.3 P63 BX63B4**	355
2.1	732.0	2.0	631.2	20000				**A504_631.2 P63 BE63B4**	**A504_631.2 P63 BX63B4**	347
2.3	666.0	2.3	574.2	20000				**A504_574.2 P63 BE63B4**	**A504_574.2 P63 BX63B4**	347
2.5	614.0	2.4	529.5	20000				**A504_529.5 P63 BE63B4**	**A504_529.5 P63 BX63B4**	347
2.7	559.0	2.7	481.6	20000				**A504_481.6 P63 BE63B4**	**A504_481.6 P63 BX63B4**	347
3.0	518.0	2.9	446.8	20000				**A504_446.8 P63 BE63B4**	**A504_446.8 P63 BX63B4**	347
3.2	471.0	3.2	406.4	20000				**A504_406.4 P63 BE63B4**	**A504_406.4 P63 BX63B4**	347
3.4	466.0	1.0	393.2	12000	**A353_393.2 S05 ME05B4**	**A353_393.2 S05 MX05B4**	338	**A353_393.2 P63 BE63B4**	**A353_393.2 P63 BX63B4**	339
3.5	447.0	1.9	376.8	15000	**A413_376.8 S05 ME05B4**	**A413_376.8 S05 MX05B4**	342	**A413_376.8 P63 BE63B4**	**A413_376.8 P63 BX63B4**	343
3.6	424.0	3.5	365.6	20000				**A504_365.6 P63 BE63B4**	**A504_365.6 P63 BX63B4**	347
3.7	422.0	0.9	356.3	9600	**A303_356.3 S05 ME05B4**	**A303_356.3 S05 MX05B4**	334	**A303_356.3 P63 BE63B4**	**A303_356.3 P63 BX63B4**	335
3.9	402.0	1.3	339.3	12000	**A353_339.3 S05 ME05B4**	**A353_339.3 S05 MX05B4**	338	**A353_339.3 P63 BE63B4**	**A353_339.3 P63 BX63B4**	339
4.1	384.0	2.2	324.2	15000	**A413_324.2 S05 ME05B4**	**A413_324.2 S05 MX05B4**	342	**A413_324.2 P63 BE63B4**	**A413_324.2 P63 BX63B4**	343
4.2	373.0	1.0	314.5	9600	**A303_314.5 S05 ME05B4**	**A303_314.5 S05 MX05B4**	334	**A303_314.5 P63 BE63B4**	**A303_314.5 P63 BX63B4**	335
4.3	362.0	1.7	305.4	12000	**A353_305.4 S05 ME05B4**	**A353_305.4 S05 MX05B4**	338	**A353_305.4 P63 BE63B4**	**A353_305.4 P63 BX63B4**	339
4.5	346.0	2.5	291.7	15000	**A413_291.7 S05 ME05B4**	**A413_291.7 S05 MX05B4**	342	**A413_291.7 P63 BE63B4**	**A413_291.7 P63 BX63B4**	343
4.9	322.0	1.2	271.5	9600	**A303_271.5 S05 ME05B4**	**A303_271.5 S05 MX05B4**	334	**A303_271.5 P63 BE63B4**	**A303_271.5 P63 BX63B4**	335
4.9	321	1.9	270.7	12000	**A353_270.7 S05 ME05B4**	**A353_270.7 S05 MX05B4**	338	**A353_270.7 P63 BE63B4**	**A353_270.7 P63 BX63B4**	339
5.0	311	2.7	262.5	15000	**A413_262.5 S05 ME05B4**	**A413_262.5 S05 MX05B4**	342	**A413_262.5 P63 BE63B4**	**A413_262.5 P63 BX63B4**	343
5.3	294	2.0	248.1	12000	**A353_248.1 S05 ME05B4**	**A353_248.1 S05 MX05B4**	338	**A353_248.1 P63 BE63B4**	**A353_248.1 P63 BX63B4**	339
5.4	290	1.3	244.3	9600	**A303_244.3 S05 ME05B4**	**A303_244.3 S05 MX05B4**	334	**A303_244.3 P63 BE63B4**	**A303_244.3 P63 BX63B4**	335

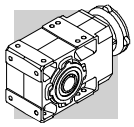

0.18 kW

n_2 min-1	M_2 Nm	S	i	R_{n2} N	IE2	IE3		IEC IE2	IEC IE3	
5.5	285	3.0	240.6	15000	**A413_240.6 S05 ME05B4**	**A413_240.6 S05 MX05B4**	342	**A413_240.6 P63 BE63B4**	**A413_240.6 P63 BX63B4**	343
5.9	265	2.3	223.2	12000	**A353_223.2 S05 ME05B4**	**A353_223.2 S05 MX05B4**	338	**A353_223.2 P63 BE63B4**	**A353_223.2 P63 BX63B4**	339
6.0	262	1.0	221.3	6200	**A203_221.3 S05 ME05B4**	**A203_221.3 S05 MX05B4**	330	**A203_221.3 P63 BE63B4**	**A203_221.3 P63 BX63B4**	331
6.1	258	3.3	217.4	15000	**A413_217.4 S05 ME05B4**	**A413_217.4 S05 MX05B4**	342	**A413_217.4 P63 BE63B4**	**A413_217.4 P63 BX63B4**	343
6.1	257	1.4	216.6	9600	**A303_216.6 S05 ME05B4**	**A303_216.6 S05 MX05B4**	334	**A303_216.6 P63 BE63B4**	**A303_216.6 P63 BX63B4**	335
6.5	239	2.5	201.8	12000	**A353_201.8 S05 ME05B4**	**A353_201.8 S05 MX05B4**	338	**A353_201.8 P63 BE63B4**	**A353_201.8 P63 BX63B4**	339
6.6	236	1.1	199.2	6200	**A203_199.2 S05 ME05B4**	**A203_199.2 S05 MX05B4**	330	**A203_199.2 P63 BE63B4**	**A203_199.2 P63 BX63B4**	331
6.6	235	1.5	198.5	9600	**A303_198.5 S05 ME05B4**	**A303_198.5 S05 MX05B4**	334	**A303_198.5 P63 BE63B4**	**A303_198.5 P63 BX63B4**	335
7.0	223	2.7	188.3	12000	**A353_188.3 S05 ME05B4**	**A353_188.3 S05 MX05B4**	338	**A353_188.3 P63 BE63B4**	**A353_188.3 P63 BX63B4**	339
7.4	212	1.6	178.5	9600	**A303_178.5 S05 ME05B4**	**A303_178.5 S05 MX05B4**	334	**A303_178.5 P63 BE63B4**	**A303_178.5 P63 BX63B4**	335
7.4	211	1.2	178.3	6200	**A203_178.3 S05 ME05B4**	**A203_178.3 S05 MX05B4**	330	**A203_178.3 P63 BE63B4**	**A203_178.3 P63 BX63B4**	331
7.7	204	2.9	171.8	12000	**A353_171.8 S05 ME05B4**	**A353_171.8 S05 MX05B4**	338	**A353_171.8 P63 BE63B4**	**A353_171.8 P63 BX63B4**	339
8.1	194	1.2	163.4	6200	**A203_163.4 S05 ME05B4**	**A203_163.4 S05 MX05B4**	330	**A203_163.4 P63 BE63B4**	**A203_163.4 P63 BX63B4**	331
8.2	191	1.8	161.4	9600	**A303_161.4 S05 ME05B4**	**A303_161.4 S05 MX05B4**	334	**A303_161.4 P63 BE63B4**	**A303_161.4 P63 BX63B4**	335
8.8	179	1.8	150.7	9600	**A303_150.7 S05 ME05B4**	**A303_150.7 S05 MX05B4**	334	**A303_150.7 P63 BE63B4**	**A303_150.7 P63 BX63B4**	335
8.8	179	3.4	150.6	12000	**A353_150.6 S05 ME05B4**	**A353_150.6 S05 MX05B4**	338	**A353_150.6 P63 BE63B4**	**A353_150.6 P63 BX63B4**	339
9.0	173	1.3	146.1	6200	**A203_146.1 S05 ME05B4**	**A203_146.1 S05 MX05B4**	330	**A203_146.1 P63 BE63B4**	**A203_146.1 P63 BX63B4**	331
9.6	163	1.9	137.4	9600	**A303_137.4 S05 ME05B4**	**A303_137.4 S05 MX05B4**	334	**A303_137.4 P63 BE63B4**	**A303_137.4 P63 BX63B4**	335
10.2	153	1.4	129.1	6200	**A203_129.1 S05 ME05B4**	**A203_129.1 S05 MX05B4**	330	**A203_129.1 P63 BE63B4**	**A203_129.1 P63 BX63B4**	331
11.0	143	1.5	120.5	6200	**A203_120.5 S05 ME05B4**	**A203_120.5 S05 MX05B4**	330	**A203_120.5 P63 BE63B4**	**A203_120.5 P63 BX63B4**	331
11.0	143	2.1	120.5	9600	**A303_120.5 S05 M05B4**	**A303_120.5 S05 MX05B4**	334	**A303_120.5 P63 BN63B4**	**A303_120.5 P63 BX63B4**	335
12.1	129	1.6	109.2	6200	**A203_109.2 S05 M05B4**	**A203_109.2 S05 MX05B4**	330	**A203_109.2 P63 BN63B4**	**A203_109.2 P63 BX63B4**	331
12.1	129	2.3	109.1	9600	**A303_109.1 S05 M05B4**	**A303_109.1 S05 MX05B4**	334	**A303_109.1 P63 BN63B4**	**A303_109.1 P63 BX63B4**	335
13.5	119	2.5	97.5	9600				**A302_97.5 P63 BN63B4**	**A302_97.5 P63 BX63B4**	335
14.3	113	1.8	92.3	6200	**A202_92.3 S05 M05B4**	**A202_92.3 S05 MX05B4**	330	**A202_92.3 P63 BN63B4**	**A202_92.3 P63 BX63B4**	331
14.4	112	0.9	91.6	4120	**A052_91.6 S05 ME05B4**	**A052_91.6 S05 MX05B4**	323	**A052_91.6 P63 BE63B4**	**A052_91.6 P63 BX63B4**	323
14.4	112	1.2	91.6	5500	**A102_91.6 S05 ME05B4**	**A102_91.6 S05 MX05B4**	326	**A102_91.6 P63 BE63B4**	**A102_91.6 P63 BX63B4**	327
15.2	106	3.0	86.7	9600				**A302_86.7 P63 BE63B4**	**A302_86.7 P63 BX63B4**	335
16.5	98	2.1	79.9	6200	**A202_79.9 S05 ME05B4**	**A202_79.9 S05 MX05B4**	330	**A202_79.9 P63 BE63B4**	**A202_79.9 P63 BX63B4**	331
17.3	94	1.1	76.4	3980	**A052_76.4 S05 ME05B4**	**A052_76.4 S05 MX05B4**	323	**A052_76.4 P63 BE63B4**	**A052_76.4 P63 BX63B4**	323
17.3	94	1.6	76.4	5500	**A102_76.4 S05 ME05B4**	**A102_76.4 S05 MX05B4**	326	**A102_76.4 P63 BE63B4**	**A102_76.4 P63 BX63B4**	327
18.6	87	2.4	71.0	6200	**A202_71.0 S05 ME05B4**	**A202_71.0 S05 MX05B4**	330	**A202_71.0 P63 BE63B4**	**A202_71.0 P63 BX63B4**	331
20.0	81	1.2	65.9	3860	**A052_65.9 S05 ME05B4**	**A052_65.9 S05 MX05B4**	323	**A052_65.9 P63 BE63B4**	**A052_65.9 P63 BX63B4**	323
20.0	81	1.9	65.9	5500	**A102_65.9 S05 ME05B4**	**A102_65.9 S05 MX05B4**	326	**A102_65.9 P63 BE63B4**	**A102_65.9 P63 BX63B4**	327
20.9	77	3.2	63.1	6200	**A202_63.1 S05 ME05B4**	**A202_63.1 S05 MX05B4**	330	**A202_63.1 P63 BE63B4**	**A202_63.1 P63 BX63B4**	331
22.5	72	1.4	58.6	3760	**A052_58.6 S05 ME05B4**	**A052_58.6 S05 MX05B4**	323	**A052_58.6 P63 BE63B4**	**A052_58.6 P63 BX63B4**	323
22.5	72	2.1	58.6	5500	**A102_58.6 S05 ME05B4**	**A102_58.6 S05 MX05B4**	326	**A102_58.6 P63 BE63B4**	**A102_58.6 P63 BX63B4**	327
25.8	63	1.6	51.3	3640	**A052_51.3 S05 ME05B4**	**A052_51.3 S05 MX05B4**	323	**A052_51.3 P63 BE63B4**	**A052_51.3 P63 BX63B4**	323
25.8	63	2.4	51.3	5500	**A102_51.3 S05 ME05B4**	**A102_51.3 S05 MX05B4**	326	**A102_51.3 P63 BE63B4**	**A102_51.3 P63 BX63B4**	327
29.1	56	1.8	45.4	3540	**A052_45.4 S05 ME05B4**	**A052_45.4 S05 MX05B4**	323	**A052_45.4 P63 BE63B4**	**A052_45.4 P63 BX63B4**	323
29.1	56	2.7	45.4	5500	**A102_45.4 S05 ME05B4**	**A102_45.4 S05 MX05B4**	326	**A102_45.4 P63 BE63B4**	**A102_45.4 P63 BX63B4**	327
32.0	50	2.0	40.9	3440	**A052_40.9 S05 ME05B4**	**A052_40.9 S05 MX05B4**	323	**A052_40.9 P63 BE63B4**	**A052_40.9 P63 BX63B4**	323
32.0	50	3.0	40.9	5500	**A102_40.9 S05 ME05B4**	**A102_40.9 S05 MX05B4**	326	**A102_40.9 P63 BE63B4**	**A102_40.9 P63 BX63B4**	327
38.0	43	2.3	35.1	3310	**A052_35.1 S05 ME05B4**	**A052_35.1 S05 MX05B4**	323	**A052_35.1 P63 BE63B4**	**A052_35.1 P63 BX63B4**	323
38.0	43	3.5	35.1	5380	**A102_35.1 S05 ME05B4**	**A102_35.1 S05 MX05B4**	326	**A102_35.1 P63 BE63B4**	**A102_35.1 P63 BX63B4**	327
41.0	39	2.5	32.2	3240	**A052_32.2 S05 ME05B4**	**A052_32.2 S05 MX05B4**	323	**A052_32.2 P63 BE63B4**	**A052_32.2 P63 BX63B4**	323
46.0	35	2.9	28.6	3130	**A052_28.6 S05 ME05B4**	**A052_28.6 S05 MX05B4**	323	**A052_28.6 P63 BE63B4**	**A052_28.6 P63 BX63B4**	323
52.0	31	3.2	25.5	3040	**A052_25.5 S05 ME05B4**	**A052_25.5 S05 MX05B4**	323	**A052_25.5 P63 BE63B4**	**A052_25.5 P63 BX63B4**	323
56.0	29	3.4	23.8	2980	**A052_23.8 S05 ME05B4**	**A052_23.8 S05 MX05B4**	323	**A052_23.8 P63 BE63B4**	**A052_23.8 P63 BX63B4**	323
62.0	26	3.8	21.4	2890	**A052_21.4 S05 ME05B4**	**A052_21.4 S05 MX05B4**	323	**A052_21.4 P63 BE63B4**	**A052_21.4 P63 BX63B4**	323
71.0	23	4.4	18.6	2780	**A052_18.6 S05 ME05B4**	**A052_18.6 S05 MX05B4**	323	**A052_18.6 P63 BE63B4**	**A052_18.6 P63 BX63B4**	323
80.0	20	5.0	16.4	2680	**A052_16.4 S05 ME05B4**	**A052_16.4 S05 MX05B4**	323	**A052_16.4 P63 BE63B4**	**A052_16.4 P63 BX63B4**	323
95.0	17.1	5.9	13.9	2550	**A052_13.9 S05 ME05B4**	**A052_13.9 S05 MX05B4**	323	**A052_13.9 P63 BE63B4**	**A052_13.9 P63 BX63B4**	323
107.0	15.1	6.6	12.3	2460	**A052_12.3 S05 ME05B4**	**A052_12.3 S05 MX05B4**	323	**A052_12.3 P63 BE63B4**	**A052_12.3 P63 BX63B4**	323
125.0	12.9	7.7	10.6	2350	**A052_10.6 S05 ME05B4**	**A052_10.6 S05 MX05B4**	323	**A052_10.6 P63 BE63B4**	**A052_10.6 P63 BX63B4**	323
137.0	11.8	8.5	9.6	2280	**A052_9.6 S05 ME05B4**	**A052_9.6 S05 MX05B4**	323	**A052_9.6 P63 BE63B4**	**A052_9.6 P63 BX63B4**	323
155.0	10.4	9.6	8.5	2200	**A052_8.5 S05 ME05B4**	**A052_8.5 S05 MX05B4**	323	**A052_8.5 P63 BE63B4**	**A052_8.5 P63 BX63B4**	323

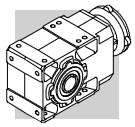

0.18 kW

n_2 min-1	M_2 Nm	S	i	R_{n2} N	IE2	IE3		IEC IE2	IEC IE3	
183.0	8.8	11.3	7.2	2090	**A052_7.2 S05 ME05B4**	**A052_7.2 S05 MX05B4**	323	**A052_7.2 P63 BE63B4**	**A052_7.2 P63 BX63B4**	323
208.0	7.8	12.9	6.3	2010	**A052_6.3 S05 ME05B4**	**A052_6.3 S05 MX05B4**	323	**A052_6.3 P63 BE63B4**	**A052_6.3 P63 BX63B4**	323
242.0	6.7	14.2	5.5	1920	**A052_5.5 S05 ME05B4**	**A052_5.5 S05 MX05B4**	323	**A052_5.5 P63 BE63B4**	**A052_5.5 P63 BX63B4**	323

0.18 kW

n_2 min-1	M_2 Nm	S	i	R_{n2} N	IE3		IEC IE3	
0.8	1989	2.5	1715	50000			**A704_1715 P63 BXN63MB4**	359
0.8	1836	2.7	1583	50000			**A704_1583 P63 BXN63MB4**	359
1.0	1561	3.2	1346	50000			**A704_1346 P63 BXN63MB4**	359
1.1	1441	3.5	1242	50000			**A704_1242 P63 BXN63MB4**	359
1.7	902	1.7	778.2	20000			**A504_778.2 P63 BXN63MB4**	347
1.7	876	3.2	755.4	30000			**A604_755.4 P63 BXN63MB4**	355
1.9	821	1.8	707.9	20000			**A504_707.9 P63 BXN63MB4**	347
1.9	809	3.5	697.3	30000			**A604_697.3 P63 BXN63MB4**	355
2.1	732	2.0	631.2	20000			**A504_631.2 P63 BXN63MB4**	347
2.3	666	2.3	574.2	20000			**A504_574.2 P63 BXN63MB4**	347
2.5	614	2.4	529.5	20000			**A504_529.5 P63 BXN63MB4**	347
2.7	559	2.7	481.6	20000			**A504_481.6 P63 BXN63MB4**	347
3.0	518	2.9	446.8	20000			**A504_446.8 P63 BXN63MB4**	347
3.2	471	3.2	406.4	20000			**A504_406.4 P63 BXN63MB4**	347
3.4	466	1.0	393.2	12000	**A353_393.2 SX05 MXN05MB4**	338	**A353_393.2 P63 BXN63MB4**	339
3.5	447	1.9	376.8	15000	**A413_376.8 SX05 MXN05MB4**	342	**A413_376.8 P63 BXN63MB4**	343
3.6	424	3.5	365.6	20000			**A504_365.6 P63 BXN63MB4**	347
3.7	422	0.9	356.3	9600	**A303_356.3 SX05 MXN05MB4**	334	**A303_356.3 P63 BXN63MB4**	335
3.9	402	1.3	339.3	12000	**A353_339.3 SX05 MXN05MB4**	338	**A353_339.3 P63 BXN63MB4**	339
4.1	384	2.2	324.2	15000	**A413_324.2 SX05 MXN05MB4**	342	**A413_324.2 P63 BXN63MB4**	343
4.2	373	1.0	314.5	9600	**A303_314.5 SX05 MXN05MB4**	334	**A303_314.5 P63 BXN63MB4**	335
4.3	362	1.7	305.4	12000	**A353_305.4 SX05 MXN05MB4**	338	**A353_305.4 P63 BXN63MB4**	339
4.5	346	2.5	291.7	15000	**A413_291.7 SX05 MXN05MB4**	342	**A413_291.7 P63 BXN63MB4**	343
4.9	322	1.2	271.5	9600	**A303_271.5 SX05 MXN05MB4**	334	**A303_271.5 P63 BXN63MB4**	335
4.9	321	1.9	270.7	12000	**A353_270.7 SX05 MXN05MB4**	338	**A353_270.7 P63 BXN63MB4**	339
5.0	311	2.7	262.5	15000	**A413_262.5 SX05 MXN05MB4**	342	**A413_262.5 P63 BXN63MB4**	343
5.3	294	2.0	248.1	12000	**A353_248.1 SX05 MXN05MB4**	338	**A353_248.1 P63 BXN63MB4**	339
5.4	290	1.3	244.3	9600	**A303_244.3 SX05 MXN05MB4**	334	**A303_244.3 P63 BXN63MB4**	335
5.5	285	3.0	240.6	15000	**A413_240.6 SX05 MXN05MB4**	342	**A413_240.6 P63 BXN63MB4**	343
5.9	265	2.3	223.2	12000	**A353_223.2 SX05 MXN05MB4**	338	**A353_223.2 P63 BXN63MB4**	339
6.0	262	1.0	221.3	6200	**A203_221.3 SX05 MXN05MB4**	330	**A203_221.3 P63 BXN63MB4**	331
6.1	258	3.3	217.4	15000	**A413_217.4 SX05 MXN05MB4**	342	**A413_217.4 P63 BXN63MB4**	343
6.1	257	1.4	216.6	9600	**A303_216.6 SX05 MXN05MB4**	334	**A303_216.6 P63 BXN63MB4**	335
6.5	239	2.5	201.8	12000	**A353_201.8 SX05 MXN05MB4**	338	**A353_201.8 P63 BXN63MB4**	339
6.6	236	1.1	199.2	6200	**A203_199.2 SX05 MXN05MB4**	330	**A203_199.2 P63 BXN63MB4**	331
6.6	235	1.5	198.5	9600	**A303_198.5 SX05 MXN05MB4**	334	**A303_198.5 P63 BXN63MB4**	335
7.0	223	2.7	188.3	12000	**A353_188.3 SX05 MXN05MB4**	338	**A353_188.3 P63 BXN63MB4**	339
7.4	212	1.6	178.5	9600	**A303_178.5 SX05 MXN05MB4**	334	**A303_178.5 P63 BXN63MB4**	335
7.4	211	1.2	178.3	6200	**A203_178.3 SX05 MXN05MB4**	330	**A203_178.3 P63 BXN63MB4**	331
7.7	204	2.9	171.8	12000	**A353_171.8 SX05 MXN05MB4**	338	**A353_171.8 P63 BXN63MB4**	339
8.1	194	1.2	163.4	6200	**A203_163.4 SX05 MXN05MB4**	330	**A203_163.4 P63 BXN63MB4**	331
8.2	191	1.8	161.4	9600	**A303_161.4 SX05 MXN05MB4**	334	**A303_161.4 P63 BXN63MB4**	335
8.8	179	1.8	150.7	9600	**A303_150.7 SX05 MXN05MB4**	334	**A303_150.7 P63 BXN63MB4**	335
8.8	179	3.4	150.6	12000	**A353_150.6 SX05 MXN05MB4**	338	**A353_150.6 P63 BXN63MB4**	339
9.0	173	1.3	146.1	6200	**A203_146.1 SX05 MXN05MB4**	330	**A203_146.1 P63 BXN63MB4**	331
9.6	163	1.9	137.4	9600	**A303_137.4 SX05 MXN05MB4**	334	**A303_137.4 P63 BXN63MB4**	335

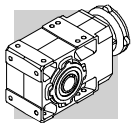

0.18 kW

n_2 min-1	M_2 Nm	S	i	R_{n2} N	IE3		IEC IE3	
10.2	153	1.4	129.1	6200	**A203_129.1 SX05 MXN05MB4**	330	**A203_129.1 P63 BXN63MB4**	331
11.0	143	1.5	120.5	6200	**A203_120.5 SX05 MXN05MB4**	330	**A203_120.5 P63 BXN63MB4**	331
11.0	143	2.1	120.5	9600	**A303_120.5 SX05 MXN05MB4**	334	**A303_120.5 P63 BXN63MB4**	335
12.1	129	1.6	109.2	6200	**A203_109.2 SX05 MXN05MB4**	330	**A203_109.2 P63 BXN63MB4**	331
12.1	129	2.3	109.1	9600	**A303_109.1 SX05 MXN05MB4**	334	**A303_109.1 P63 BXN63MB4**	335
13.5	119	2.5	97.5	9600			**A302_97.5 P63 BXN63MB4**	335
14.3	113	1.8	92.3	6200	**A202_92.3 SX05 MXN05MB4**	330	**A202_92.3 P63 BXN63MB4**	331
14.4	112	0.9	91.6	4120	**A052_91.6 SX05 MXN05MB4**	323	**A052_91.6 P63 BXN63MB4**	323
14.4	112	1.2	91.6	5500	**A102_91.6 SX05 MXN05MB4**	326	**A102_91.6 P63 BXN63MB4**	327
15.2	106	3.0	86.7	9600			**A302_86.7 P63 BXN63MB4**	335
16.5	98	2.1	79.9	6200	**A202_79.9 SX05 MXN05MB4**	330	**A202_79.9 P63 BXN63MB4**	331
17.3	94	1.1	76.4	3980	**A052_76.4 SX05 MXN05MB4**	323	**A052_76.4 P63 BXN63MB4**	323
17.3	94	1.6	76.4	5500	**A102_76.4 SX05 MXN05MB4**	326	**A102_76.4 P63 BXN63MB4**	327
18.6	87	2.4	71.0	6200	**A202_71.0 SX05 MXN05MB4**	330	**A202_71.0 P63 BXN63MB4**	331
20.0	81	1.2	65.9	3860	**A052_65.9 SX05 MXN05MB4**	323	**A052_65.9 P63 BXN63MB4**	323
20.0	81	1.9	65.9	5500	**A102_65.9 SX05 MXN05MB4**	326	**A102_65.9 P63 BXN63MB4**	327
20.9	77	3.2	63.1	6200	**A202_63.1 SX05 MXN05MB4**	330	**A202_63.1 P63 BXN63MB4**	331
22.5	72	1.4	58.6	3760	**A052_58.6 SX05 MXN05MB4**	323	**A052_58.6 P63 BXN63MB4**	323
22.5	72	2.1	58.6	5500	**A102_58.6 SX05 MXN05MB4**	326	**A102_58.6 P63 BXN63MB4**	327
25.8	63	1.6	51.3	3640	**A052_51.3 SX05 MXN05MB4**	323	**A052_51.3 P63 BXN63MB4**	323
25.8	63	2.4	51.3	5500	**A102_51.3 SX05 MXN05MB4**	326	**A102_51.3 P63 BXN63MB4**	327
29.1	56	1.8	45.4	3540	**A052_45.4 SX05 MXN05MB4**	323	**A052_45.4 P63 BXN63MB4**	323
29.1	56	2.7	45.4	5500	**A102_45.4 SX05 MXN05MB4**	326	**A102_45.4 P63 BXN63MB4**	327
32.0	50	2.0	40.9	3440	**A052_40.9 SX05 MXN05MB4**	323	**A052_40.9 P63 BXN63MB4**	323
32.0	50	3.0	40.9	5500	**A102_40.9 SX05 MXN05MB4**	326	**A102_40.9 P63 BXN63MB4**	327
38.0	43	2.3	35.1	3310	**A052_35.1 SX05 MXN05MB4**	323	**A052_35.1 P63 BXN63MB4**	323
38.0	43	3.5	35.1	5380	**A102_35.1 SX05 MXN05MB4**	326	**A102_35.1 P63 BXN63MB4**	327
41.0	39	2.5	32.2	3240	**A052_32.2 SX05 MXN05MB4**	323	**A052_32.2 P63 BXN63MB4**	323
46.0	35	2.9	28.6	3130	**A052_28.6 SX05 MXN05MB4**	323	**A052_28.6 P63 BXN63MB4**	323
52.0	31	3.2	25.5	3040	**A052_25.5 SX05 MXN05MB4**	323	**A052_25.5 P63 BXN63MB4**	323
56.0	29	3.4	23.8	2980	**A052_23.8 SX05 MXN05MB4**	323	**A052_23.8 P63 BXN63MB4**	323
62.0	26	3.8	21.4	2890	**A052_21.4 SX05 MXN05MB4**	323	**A052_21.4 P63 BXN63MB4**	323
71.0	23	4.4	18.6	2780	**A052_18.6 SX05 MXN05MB4**	323	**A052_18.6 P63 BXN63MB4**	323
80.0	20	5.0	16.4	2680	**A052_16.4 SX05 MXN05MB4**	323	**A052_16.4 P63 BXN63MB4**	323
95.0	17.1	5.9	13.9	2550	**A052_13.9 SX05 MXN05MB4**	323	**A052_13.9 P63 BXN63MB4**	323
107.0	15.1	6.6	12.3	2460	**A052_12.3 SX05 MXN05MB4**	323	**A052_12.3 P63 BXN63MB4**	323
125.0	12.9	7.7	10.6	2350	**A052_10.6 SX05 MXN05MB4**	323	**A052_10.6 P63 BXN63MB4**	323
137.0	11.8	8.5	9.6	2280	**A052_9.6 SX05 MXN05MB4**	323	**A052_9.6 P63 BXN63MB4**	323
155.0	10.4	9.6	8.5	2200	**A052_8.5 SX05 MXN05MB4**	323	**A052_8.5 P63 BXN63MB4**	323
183.0	8.8	11.3	7.2	2090	**A052_7.2 SX05 MXN05MB4**	323	**A052_7.2 P63 BXN63MB4**	323
208.0	7.8	12.9	6.3	2010	**A052_6.3 SX05 MXN05MB4**	323	**A052_6.3 P63 BXN63MB4**	323
242.0	6.7	14.2	5.5	1920	**A052_5.5 SX05 MXN05MB4**	323	**A052_5.5 P63 BXN63MB4**	323

0.25 kW

n_2 min-1	M_2 Nm	S	i	R_{n2} N	IE2	IE3		IEC IE2	IEC IE3	
0.8	2642	1.9	1715.0	50000				**A704_1715 P71 BE71A4**	**A704_1715 P71 BX71A4**	359
0.9	2439	2.1	1583.0	50000				**A704_1583 P71 BE71A4**	**A704_1583 P71 BX71A4**	359
0.9	2400	3.3	1558.0	65000				**A804_1558 P71 BE71A4**	**A804_1558 P71 BX71A4**	362
1.0	2073	2.4	1346.0	50000				**A704_1346 P71 BE71A4**	**A704_1346 P71 BX71A4**	359
1.1	1914	2.6	1242.0	50000				**A704_1242 P71 BE71A4**	**A704_1242 P71 BX71A4**	359
1.2	1789	2.8	1161.0	50000				**A704_1161 P71 BE71A4**	**A704_1161 P71 BX71A4**	359
1.3	1652	3.0	1072.0	50000				**A704_1072 P71 BE71A4**	**A704_1072 P71 BX71A4**	359

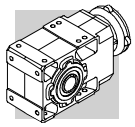

0.25 kW

n_2 min-1	M_2 Nm	S	i	R_{n2} N	IE2	IE3		IEC IE2	IEC IE3	
1.5	1427	3.5	926.5	50000				**A704_926.5 P71 BE71A4**	**A704_926.5 P71 BX71A4**	359
1.8	1199	1.3	778.2	20000				**A504_778.2 P71 BE71A4**	**A504_778.2 P71 BX71A4**	347
1.8	1164	2.4	755.4	30000				**A604_755.4 P71 BE71A4**	**A604_755.4 P71 BX71A4**	355
1.9	1091	1.4	707.9	20000				**A504_707.9 P71 BE71A4**	**A504_707.9 P71 BX71A4**	347
2.0	1074	2.6	697.3	30000				**A604_697.3 P71 BE71A4**	**A604_697.3 P71 BX71A4**	355
2.2	978	2.9	634.6	30000				**A604_634.6 P71 BE71A4**	**A604_634.6 P71 BX71A4**	355
2.2	972	1.5	631.2	20000				**A504_631.2 P71 BE71A4**	**A504_631.2 P71 BX71A4**	347
2.4	902	3.1	585.8	30000				**A604_585.8 P71 BE71A4**	**A604_585.8 P71 BX71A4**	355
2.4	885	1.7	574.2	20000				**A504_574.2 P71 BE71A4**	**A504_574.2 P71 BX71A4**	347
2.5	835	3.4	542.0	30000				**A604_542.0 P71 BE71A4**	**A604_542.0 P71 BX71A4**	355
2.6	816	1.8	529.5	20000				**A504_529.5 P71 BE71A4**	**A504_529.5 P71 BX71A4**	347
2.9	742	2.0	481.6	20000				**A504_481.6 P71 BE71A4**	**A504_481.6 P71 BX71A4**	347
3.1	688	2.2	446.8	20000				**A504_446.8 P71 BE71A4**	**A504_446.8 P71 BX71A4**	347
3.4	626	2.4	406.4	20000				**A504_406.4 P71 BE71A4**	**A504_406.4 P71 BX71A4**	347
3.6	611	1.4	376.8	15000	**A413_376.8 S1 ME1SA4**	**A413_376.8 S1 MX1SA4**	342	**A413_376.8 P71 BE71A4**	**A413_376.8 P71 BX71A4**	343
3.8	563	2.7	365.6	20000				**A504_365.6 P71 BE71A4**	**A504_365.6 P71 BX71A4**	347
3.9	550	0.9	339.3	12000	**A353_339.3 S1 ME1SA4**	**A353_339.3 S1 MX1SA4**	338	**A353_339.3 P71 BE71A4**	**A353_339.3 P71 BX71A4**	339
4.1	526	1.6	324.2	15000	**A413_324.2 S1 ME1SA4**	**A413_324.2 S1 MX1SA4**	342	**A413_324.2 P71 BE71A4**	**A413_324.2 P71 BX71A4**	343
4.1	512	2.9	332.6	20000				**A504_332.6 P71 BE71A4**	**A504_332.6 P71 BX71A4**	347
4.4	495	1.2	305.4	12000	**A353_305.4 S1 ME1SA4**	**A353_305.4 S1 MX1SA4**	338	**A353_305.4 P71 BE71A4**	**A353_305.4 P71 BX71A4**	339
4.7	460	1.8	291.7	15000	**A413_291.7 S1 ME1SA4**	**A413_291.7 S1 MX1SA4**	342	**A413_291.7 P71 BE71A4**	**A413_291.7 P71 BX71A4**	343
4.8	442	3.4	286.8	20000				**A504_286.8 P71 BE71A4**	**A504_286.8 P71 BX71A4**	347
4.9	440	0.9	271.5	9600	**A303_271.5 S1 ME1SA4**	**A303_271.5 S1 MX1SA4**	334	**A303_271.5 P71 BE71A4**	**A303_271.5 P71 BX71A4**	335
5.0	439	1.4	270.7	12000	**A353_270.7 S1 ME1SA4**	**A353_270.7 S1 MX1SA4**	338	**A353_270.7 P71 BE71A4**	**A353_270.7 P71 BX71A4**	339
5.1	426	2.0	262.5	15000	**A413_262.5 S1 ME1SA4**	**A413_262.5 S1 MX1SA4**	342	**A413_262.5 P71 BE71A4**	**A413_262.5 P71 BX71A4**	343
5.4	403	1.5	248.1	12000	**A353_248.1 S1 ME1SA4**	**A353_248.1 S1 MX1SA4**	338	**A353_248.1 P71 BE71A4**	**A353_248.1 P71 BX71A4**	339
5.6	385	1.0	244.3	9600	**A303_244.3 S1 ME1SA4**	**A303_244.3 S1 MX1SA4**	334	**A303_244.3 P71 BE71A4**	**A303_244.3 P71 BX71A4**	335
5.7	379	2.2	240.6	15000	**A413_240.6 S1 ME1SA4**	**A413_240.6 S1 MX1SA4**	342	**A413_240.6 P71 BE71A4**	**A413_240.6 P71 BX71A4**	343
6.0	362	1.7	223.2	12000	**A353_223.2 S1 ME1SA4**	**A353_223.2 S1 MX1SA4**	338	**A353_223.2 P71 BE71A4**	**A353_223.2 P71 BX71A4**	339
6.2	353	2.4	217.4	15000	**A413_217.4 S1 ME1SA4**	**A413_217.4 S1 MX1SA4**	342	**A413_217.4 P71 BE71A4**	**A413_217.4 P71 BX71A4**	343
6.2	351	1.0	216.6	9600	**A303_216.6 S1 ME1SA4**	**A303_216.6 S1 MX1SA4**	334	**A303_216.6 P71 BE71A4**	**A303_216.6 P71 BX71A4**	335
6.6	327	1.8	201.8	12000	**A353_201.8 S1 ME1SA4**	**A353_201.8 S1 MX1SA4**	338	**A353_201.8 P71 BE71A4**	**A353_201.8 P71 BX71A4**	339
7.0	313	1.1	198.5	9600	**A303_198.5 S1 ME1SA4**	**A303_198.5 S1 MX1SA4**	334	**A303_198.5 P71 BE71A4**	**A303_198.5 P71 BX71A4**	335
7.0	311	2.7	197.5	15000	**A413_197.5 S1 ME1SA4**	**A413_197.5 S1 MX1SA4**	342	**A413_197.5 P71 BE71A4**	**A413_197.5 P71 BX71A4**	343
7.1	306	2.0	188.3	12000	**A353_188.3 S1 ME1SA4**	**A353_188.3 S1 MX1SA4**	338	**A353_188.3 P71 BE71A4**	**A353_188.3 P71 BX71A4**	339
7.3	299	2.8	184.4	15000	**A413_184.4 S1 ME1SA4**	**A413_184.4 S1 MX1SA4**	342	**A413_184.4 P71 BE71A4**	**A413_184.4 P71 BX71A4**	343
7.5	290	1.2	178.5	9600	**A303_178.5 S1 ME1SA4**	**A303_178.5 S1 MX1SA4**	334	**A303_178.5 P71 BE71A4**	**A303_178.5 P71 BX71A4**	335
7.8	279	2.2	171.8	12000	**A353_171.8 S1 ME1SA4**	**A353_171.8 S1 MX1SA4**	338	**A353_171.8 P71 BE71A4**	**A353_171.8 P71 BX71A4**	339
8.4	257	0.9	163.4	6200	**A203_163.4 S1 ME1SA4**	**A203_163.4 S1 MX1SA4**	330	**A203_163.4 P71 BE71A4**	**A203_163.4 P71 BX71A4**	331
8.5	254	1.3	161.4	9600	**A303_161.4 S1 ME1SA4**	**A303_161.4 S1 MX1SA4**	334	**A303_161.4 P71 BE71A4**	**A303_161.4 P71 BX71A4**	335
8.9	244	1.4	150.7	9600	**A303_150.7 S1 ME1SA4**	**A303_150.7 S1 MX1SA4**	334	**A303_150.7 P71 BE71A4**	**A303_150.7 P71 BX71A4**	335
8.9	244	2.5	150.6	12000	**A353_150.6 S1 ME1SA4**	**A353_150.6 S1 MX1SA4**	338	**A353_150.6 P71 BE71A4**	**A353_150.6 P71 BX71A4**	339
9.2	237	1.0	146.1	6200	**A203_146.1 S1 ME1SA4**	**A203_146.1 S1 MX1SA4**	330	**A203_146.1 P71 BE71A4**	**A203_146.1 P71 BX71A4**	331
9.8	221	2.6	136.3	12000	**A353_136.3 S1 ME1SA4**	**A353_136.3 S1 MX1SA4**	338	**A353_136.3 P71 BE71A4**	**A353_136.3 P71 BX71A4**	339
10.0	216	1.5	137.4	9600	**A303_137.4 S1 ME1SA4**	**A303_137.4 S1 MX1SA4**	334	**A303_137.4 P71 BE71A4**	**A303_137.4 P71 BX71A4**	335
10.7	203	1.1	129.1	6200	**A203_129.1 S1 ME1SA4**	**A203_129.1 S1 MX1SA4**	330	**A203_129.1 P71 BE71A4**	**A203_129.1 P71 BX71A4**	331
11.1	196	1.1	120.5	6200	**A203_120.5 S1 ME1SA4**	**A203_120.5 S1 MX1SA4**	330	**A203_120.5 P71 BE71A4**	**A203_120.5 P71 BX71A4**	331
11.1	195	1.5	120.5	9600	**A303_120.5 S1 ME1SA4**	**A303_120.5 S1 MX1SA4**	334	**A303_120.5 P71 BE71A4**	**A303_120.5 P71 BX71A4**	335
11.5	190	3.0	116.9	12000	**A353_116.9 S1 ME1SA4**	**A353_116.9 S1 MX1SA4**	338	**A353_116.9 P71 BE71A4**	**A353_116.9 P71 BX71A4**	339
12.6	172	1.2	109.2	6200	**A203_109.2 S1 ME1SA4**	**A203_109.2 S1 MX1SA4**	330	**A203_109.2 P71 BE71A4**	**A203_109.2 P71 BX71A4**	331
12.7	172	1.7	109.1	9600	**A303_109.1 S1 ME1SA4**	**A303_109.1 S1 MX1SA4**	334	**A303_109.1 P71 BE71A4**	**A303_109.1 P71 BX71A4**	335
12.7	171	3.1	105.5	12000	**A353_105.5 S1 ME1SA4**	**A353_105.5 S1 MX1SA4**	338	**A353_105.5 P71 BE71A4**	**A353_105.5 P71 BX71A4**	339
14.2	159	1.9	97.5	9600				**A302_97.5 P71 BN71A4**	**A302_97.5 P71 BE71A4**	335
14.4	156	3.5	95.6	12000				**A352_95.6 P71 BN71A4**	**A352_95.6 P71 BE71A4**	339
14.5	155	1.3	92.3	6200	**A202_92.3 S1 ME1SA4**	**A202_92.3 S1 MX1SA4**	330	**A202_92.3 P71 BE71A4**	**A202_92.3 P71 BX71A4**	331
15.9	141	2.3	86.7	9600				**A302_86.7 P71 BE71A4**	**A302_86.7 P71 BX71A4**	335
16.8	134	1.6	79.9	6200	**A202_79.9 S1 ME1SA4**	**A202_79.9 S1 MX1SA4**	330	**A202_79.9 P71 BE71A4**	**A202_79.9 P71 BX71A4**	331

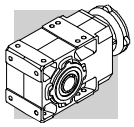

0.25 kW

n_2 min-1	M_2 Nm	S	i	R_{n2} N	IE2	IE3		IEC IE2	IEC IE3	
17.5	128	1.2	76.4	5500	**A102_76.4 S1 ME1SA4**	**A102_76.4 S1 MX1SA4**	326	**A102_76.4 P71 BE71A4**	**A102_76.4 P71 BX71A4**	327
18.0	125	2.8	76.5	9600				**A302_76.5 P71 BE71A4**	**A302_76.5 P71 BX71A4**	335
19.4	116	1.8	71.0	6200	**A202_71.0 S1 ME1SA4**	**A202_71.0 S1 MX1SA4**	330	**A202_71.0 P71 BE71A4**	**A202_71.0 P71 BX71A4**	331
20.3	110	0.9	65.9	3610	**A052_65.9 S1 ME1SA4**	**A052_65.9 S1 MX1SA4**	323	**A052_65.9 P71 BE71A4**	**A052_65.9 P71 BX71A4**	323
20.3	110	1.4	65.9	5500	**A102_65.9 S1 ME1SA4**	**A102_65.9 S1 MX1SA4**	326	**A102_65.9 P71 BE71A4**	**A102_65.9 P71 BX71A4**	327
21.2	106	2.3	63.1	6200	**A202_63.1 S1 ME1SA4**	**A202_63.1 S1 MX1SA4**	330	**A202_63.1 P71 BE71A4**	**A202_63.1 P71 BX71A4**	331
22.9	98	1.0	58.6	3540	**A052_58.6 S1 ME1SA4**	**A052_58.6 S1 MX1SA4**	323	**A052_58.6 P71 BE71A4**	**A052_58.6 P71 BX71A4**	323
23.5	95	1.6	58.6	5500	**A102_58.6 S1 ME1SA4**	**A102_58.6 S1 MX1SA4**	326	**A102_58.6 P71 BE71A4**	**A102_58.6 P71 BX71A4**	327
25.0	90	2.8	53.7	6200	**A202_53.7 S1 ME1SA4**	**A202_53.7 S1 MX1SA4**	330	**A202_53.7 P71 BE71A4**	**A202_53.7 P71 BX71A4**	331
26.1	86	1.2	51.3	3450	**A052_51.3 S1 ME1SA4**	**A052_51.3 S1 MX1SA4**	323	**A052_51.3 P71 BE71A4**	**A052_51.3 P71 BX71A4**	323
26.1	86	1.7	51.3	5500	**A102_51.3 S1 ME1SA4**	**A102_51.3 S1 MX1SA4**	326	**A102_51.3 P71 BE71A4**	**A102_51.3 P71 BX71A4**	327
28.6	79	3.2	48.3	6180	**A202_48.3 S1 ME1SA4**	**A202_48.3 S1 MX1SA4**	330	**A202_48.3 P71 BE71A4**	**A202_48.3 P71 BX71A4**	331
29.5	76	1.3	45.4	3370	**A052_45.4 S1 ME1SA4**	**A052_45.4 S1 MX1SA4**	323	**A052_45.4 P71 BE71A4**	**A052_45.4 P71 BX71A4**	323
29.5	76	2.0	45.4	5500	**A102_45.4 S1 ME1SA4**	**A102_45.4 S1 MX1SA4**	326	**A102_45.4 P71 BE71A4**	**A102_45.4 P71 BX71A4**	327
33.0	68	1.5	40.9	3290	**A052_40.9 S1 ME1SA4**	**A052_40.9 S1 MX1SA4**	323	**A052_40.9 P71 BE71A4**	**A052_40.9 P71 BX71A4**	323
34.0	66	2.3	40.9	5500	**A102_40.9 S1 ME1SA4**	**A102_40.9 S1 MX1SA4**	326	**A102_40.9 P71 BE71A4**	**A102_40.9 P71 BX71A4**	327
38.0	59	1.7	35.1	3180	**A052_35.1 S1 ME1SA4**	**A052_35.1 S1 MX1SA4**	323	**A052_35.1 P71 BE71A4**	**A052_35.1 P71 BX71A4**	323
38.0	59	2.5	35.1	5260	**A102_35.1 S1 ME1SA4**	**A102_35.1 S1 MX1SA4**	326	**A102_35.1 P71 BE71A4**	**A102_35.1 P71 BX71A4**	327
42.0	54	1.9	32.2	3120	**A052_32.2 S1 ME1SA4**	**A052_32.2 S1 MX1SA4**	323	**A052_32.2 P71 BE71A4**	**A052_32.2 P71 BX71A4**	323
43.0	52	2.9	32.2	5500	**A102_32.2 S1 ME1SA4**	**A102_32.2 S1 MX1SA4**	326	**A102_32.2 P71 BE71A4**	**A102_32.2 P71 BX71A4**	327
47.0	48	2.1	28.6	3030	**A052_28.6 S1 ME1SA4**	**A052_28.6 S1 MX1SA4**	323	**A052_28.6 P71 BE71A4**	**A052_28.6 P71 BX71A4**	323
47.0	48	3.1	28.6	4970	**A102_28.6 S1 ME1SA4**	**A102_28.6 S1 MX1SA4**	326	**A102_28.6 P71 BE71A4**	**A102_28.6 P71 BX71A4**	327
53.0	43	2.3	25.5	2940	**A052_25.5 S1 ME1SA4**	**A052_25.5 S1 MX1SA4**	323	**A052_25.5 P71 BE71A4**	**A052_25.5 P71 BX71A4**	323
56.0	40	2.5	23.8	2890	**A052_23.8 S1 ME1SA4**	**A052_23.8 S1 MX1SA4**	323	**A052_23.8 P71 BE71A4**	**A052_23.8 P71 BX71A4**	323
63.0	36	2.8	21.4	2810	**A052_21.4 S1 ME1SA4**	**A052_21.4 S1 MX1SA4**	323	**A052_21.4 P71 BE71A4**	**A052_21.4 P71 BX71A4**	323
72.0	31	3.2	18.6	2710	**A052_18.6 S1 ME1SA4**	**A052_18.6 S1 MX1SA4**	323	**A052_18.6 P71 BE71A4**	**A052_18.6 P71 BX71A4**	323
84.0	27	3.7	16.4	2620	**A052_16.4 S1 ME1SA4**	**A052_16.4 S1 MX1SA4**	323	**A052_16.4 P71 BE71A4**	**A052_16.4 P71 BX71A4**	323
99.0	23	4.4	13.9	2500	**A052_13.9 S1 ME1SA4**	**A052_13.9 S1 MX1SA4**	323	**A052_13.9 P71 BE71A4**	**A052_13.9 P71 BX71A4**	323
112.0	20	5.0	12.3	2420	**A052_12.3 S1 ME1SA4**	**A052_12.3 S1 MX1SA4**	323	**A052_12.3 P71 BE71A4**	**A052_12.3 P71 BX71A4**	323
131.0	17.2	5.8	10.6	2310	**A052_10.6 S1 ME1SA4**	**A052_10.6 S1 MX1SA4**	323	**A052_10.6 P71 BE71A4**	**A052_10.6 P71 BX71A4**	323
144.0	15.7	6.4	9.6	2260	**A052_9.6 S1 ME1SA4**	**A052_9.6 S1 MX1SA4**	323	**A052_9.6 P71 BE71A4**	**A052_9.6 P71 BX71A4**	323
162.0	13.9	7.2	8.5	2180	**A052_8.5 S1 ME1SA4**	**A052_8.5 S1 MX1SA4**	323	**A052_8.5 P71 BE71A4**	**A052_8.5 P71 BX71A4**	323
191.0	11.7	8.5	7.2	2070	**A052_7.2 S1 ME1SA4**	**A052_7.2 S1 MX1SA4**	323	**A052_7.2 P71 BE71A4**	**A052_7.2 P71 BX71A4**	323
218.0	10.3	9.7	6.3	1990	**A052_6.3 S1 ME1SA4**	**A052_6.3 S1 MX1SA4**	323	**A052_6.3 P71 BE71A4**	**A052_6.3 P71 BX71A4**	323
252.0	8.9	10.7	5.5	1900	**A052_5.5 S1 ME1SA4**	**A052_5.5 S1 MX1SA4**	323	**A052_5.5 P71 BE71A4**	**A052_5.5 P71 BX71A4**	323

0.25 kW

n_2 min-1	M_2 Nm	S	i	R_{n2} N	IE3		IEC IE3	
0.8	2642	1.9	1715	50000			**A704_1715 P71 BXN71MA4**	359
0.9	2439	2.1	1583	50000			**A704_1583 P71 BXN71MA4**	359
0.9	2400	3.3	1558	65000			**A804_1558 P71 BXN71MA4**	362
1.0	2073	2.4	1346	50000			**A704_1346 P71 BXN71MA4**	359
1.1	1914	2.6	1242	50000			**A704_1242 P71 BXN71MA4**	359
1.2	1789	2.8	1161	50000			**A704_1161 P71 BXN71MA4**	359
1.3	1652	3.0	1072	50000			**A704_1072 P71 BXN71MA4**	359
1.5	1427	3.5	926.5	50000			**A704_926.5 P71 BXN71MA4**	359
1.8	1199	1.3	778.2	20000			**A504_778.2 P71 BXN71MA4**	347
1.8	1164	2.4	755.4	30000			**A604_755.4 P71 BXN71MA4**	355
1.9	1091	1.4	707.9	20000			**A504_707.9 P71 BXN71MA4**	347
2.0	1074	2.6	697.3	30000			**A604_697.3 P71 BXN71MA4**	355
2.2	978	2.9	634.6	30000			**A604_634.6 P71 BXN71MA4**	355
2.2	972	1.5	631.2	20000			**A504_631.2 P71 BXN71MA4**	347

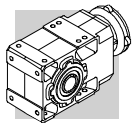

0.25 kW

n_2 min-1	M_2 Nm	S	i	R_{n2} N	IE3		IEC IE3	
2.4	902	3.1	585.8	30000			**A604_585.8 P71 BXN71MA4**	355
2.4	885	1.7	574.2	20000			**A504_574.2 P71 BXN71MA4**	347
2.5	835	3.4	542.0	30000			**A604_542.0 P71 BXN71MA4**	355
2.6	816	1.8	529.5	20000			**A504_529.5 P71 BXN71MA4**	347
2.9	742	2.0	481.6	20000			**A504_481.6 P71 BXN71MA4**	347
3.1	688	2.2	446.8	20000			**A504_446.8 P71 BXN71MA4**	347
3.4	626	2.4	406.4	20000			**A504_406.4 P71 BXN71MA4**	347
3.6	611	1.4	376.8	15000	**A413_376.8 SX10 MXN10MA4**	342	**A413_376.8 P71 BXN71MA4**	343
3.8	563	2.7	366	20000			**A504_365.6 P71 BXN71MA4**	347
3.9	550	0.9	339	12000	**A353_339.3 SX10 MXN10MA4**	338	**A353_339.3 P71 BXN71MA4**	339
4.1	526	1.6	324	15000	**A413_324.2 SX10 MXN10MA4**	342	**A413_324.2 P71 BXN71MA4**	343
4.1	512	2.9	333	20000			**A504_332.6 P71 BXN71MA4**	347
4.4	495	1.2	305	12000	**A353_305.4 SX10 MXN10MA4**	338	**A353_305.4 P71 BXN71MA4**	339
4.7	460	1.8	292	15000	**A413_291.7 SX10 MXN10MA4**	342	**A413_291.7 P71 BXN71MA4**	343
4.8	442	3.4	287	20000			**A504_286.8 P71 BXN71MA4**	347
4.9	440	0.9	272	9600	**A303_271.5 SX10 MXN10MA4**	334	**A303_271.5 P71 BXN71MA4**	335
5.0	439	1.4	271	12000	**A353_270.7 SX10 MXN10MA4**	338	**A353_270.7 P71 BXN71MA4**	339
5.1	426	2	263	15000	**A413_262.5 SX10 MXN10MA4**	342	**A413_262.5 P71 BXN71MA4**	343
5.4	403	1.5	248	12000	**A353_248.1 SX10 MXN10MA4**	338	**A353_248.1 P71 BXN71MA4**	339
5.6	385	1	244	9600	**A303_244.3 SX10 MXN10MA4**	334	**A303_244.3 P71 BXN71MA4**	335
5.7	379	2.2	241	15000	**A413_240.6 SX10 MXN10MA4**	342	**A413_240.6 P71 BXN71MA4**	343
6.0	362	1.7	223	12000	**A353_223.2 SX10 MXN10MA4**	338	**A353_223.2 P71 BXN71MA4**	339
6.2	353	2.4	217	15000	**A413_217.4 SX10 MXN10MA4**	342	**A413_217.4 P71 BXN71MA4**	343
6.2	351	1	217	9600	**A303_216.6 SX10 MXN10MA4**	334	**A303_216.6 P71 BXN71MA4**	335
6.6	327	1.8	202	12000	**A353_201.8 SX10 MXN10MA4**	338	**A353_201.8 P71 BXN71MA4**	339
7.0	313	1.1	199	9600	**A303_198.5 SX10 MXN10MA4**	334	**A303_198.5 P71 BXN71MA4**	335
7.0	311	2.7	198	15000	**A413_197.5 SX10 MXN10MA4**	342	**A413_197.5 P71 BXN71MA4**	343
7.1	306	2	188	12000	**A353_188.3 SX10 MXN10MA4**	338	**A353_188.3 P71 BXN71MA4**	339
7.3	299	2.8	184	15000	**A413_184.4 SX10 MXN10MA4**	342	**A413_184.4 P71 BXN71MA4**	343
7.5	290	1.2	179	9600	**A303_178.5 SX10 MXN10MA4**	334	**A303_178.5 P71 BXN71MA4**	335
7.8	279	2.2	172	12000	**A353_171.8 SX10 MXN10MA4**	338	**A353_171.8 P71 BXN71MA4**	339
8.4	257	0.9	163	6200	**A203_163.4 SX10 MXN10MA4**	330	**A203_163.4 P71 BXN71MA4**	331
8.5	254	1.3	161	9600	**A303_161.4 SX10 MXN10MA4**	334	**A303_161.4 P71 BXN71MA4**	335
8.9	244	1.4	151	9600	**A303_150.7 SX10 MXN10MA4**	334	**A303_150.7 P71 BXN71MA4**	335
8.9	244	2.5	151	12000	**A353_150.6 SX10 MXN10MA4**	338	**A353_150.6 P71 BXN71MA4**	339
9.2	237	1	146	6200	**A203_146.1 SX10 MXN10MA4**	330	**A203_146.1 P71 BXN71MA4**	331
9.8	221	2.6	136	12000	**A353_136.3 SX10 MXN10MA4**	338	**A353_136.3 P71 BXN71MA4**	339
10.0	216	1.5	137	9600	**A303_137.4 SX10 MXN10MA4**	334	**A303_137.4 P71 BXN71MA4**	335
10.7	203	1.1	129	6200	**A203_129.1 SX10 MXN10MA4**	330	**A203_129.1 P71 BXN71MA4**	331
11.1	196	1.1	121	6200	**A203_120.5 SX10 MXN10MA4**	330	**A203_120.5 P71 BXN71MA4**	331
11.1	195	1.5	121	9600	**A303_120.5 SX10 MXN10MA4**	334	**A303_120.5 P71 BXN71MA4**	335
11.5	190	3	117	12000	**A353_116.9 SX10 MXN10MA4**	338	**A353_116.9 P71 BXN71MA4**	339
12.6	172	1.2	109	6200	**A203_109.2 SX10 MXN10MA4**	330	**A203_109.2 P71 BXN71MA4**	331
12.7	172	1.7	109	9600	**A303_109.1 SX10 MXN10MA4**	334	**A303_109.1 P71 BXN71MA4**	335
12.7	171	3.1	106	12000	**A353_105.5 SX10 MXN10MA4**	338	**A353_105.5 P71 BXN71MA4**	339
14.2	159	1.9	98	9600			**A302_97.5 P71 BXN71MA4**	335
14.4	156	3.5	96	12000			**A352_95.6 P71 BXN71MA4**	339
14.5	155	1.3	92	6200	**A202_92.3 SX10 MXN10MA4**	330	**A202_92.3 P71 BXN71MA4**	331
15.9	141	2.3	87	9600			**A302_86.7 P71 BXN71MA4**	335
16.8	134	1.6	80	6200	**A202_79.9 SX10 MXN10MA4**	330	**A202_79.9 P71 BXN71MA4**	331
17.5	128	1.2	76	5500	**A102_76.4 SX10 MXN10MA4**	326	**A102_76.4 P71 BXN71MA4**	327
18.0	125	2.8	77	9600			**A302_76.5 P71 BXN71MA4**	335
19.4	116	1.8	71	6200	**A202_71.0 SX10 MXN10MA4**	330	**A202_71.0 P71 BXN71MA4**	331
20.3	110	0.9	66	3610			**A052_65.9 P71 BXN71MA4**	323
20.3	110	1.4	66	5500	**A102_65.9 SX10 MXN10MA4**	326	**A102_65.9 P71 BXN71MA4**	327
21.2	106	2.3	63	6200	**A202_63.1 SX10 MXN10MA4**	330	**A202_63.1 P71 BXN71MA4**	331
22.9	98	1	59	3540			**A052_58.6 P71 BXN71MA4**	323

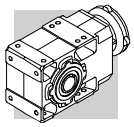

0.25 kW

n_2 min^{-1}	M_2 Nm	S	i	R_{n2} N	IE3		IEC IE3	
23.5	95	1.6	59	5500	**A102_58.6 SX10 MXN10MA4**	326	**A102_58.6 P71 BXN71MA4**	327
25.0	90	2.8	54	6200	**A202_53.7 SX10 MXN10MA4**	330	**A202_53.7 P71 BXN71MA4**	331
26.1	86	1.2	51	3450			**A052_51.3 P71 BXN71MA4**	323
26.1	86	1.7	51	5500	**A102_51.3 SX10 MXN10MA4**	326	**A102_51.3 P71 BXN71MA4**	327
28.6	79	3.2	48	6180	**A202_48.3 SX10 MXN10MA4**	330	**A202_48.3 P71 BXN71MA4**	331
29.5	76	1.3	45	3370			**A052_45.4 P71 BXN71MA4**	323
29.5	76	2	45	5500	**A102_45.4 SX10 MXN10MA4**	326	**A102_45.4 P71 BXN71MA4**	327
33.0	68	1.5	41	3290			**A052_40.9 P71 BXN71MA4**	323
34.0	66	2.3	41	5500	**A102_40.9 SX10 MXN10MA4**	326	**A102_40.9 P71 BXN71MA4**	327
38.0	59	1.7	35	3180			**A052_35.1 P71 BXN71MA4**	323
38.0	59	2.5	35	5260	**A102_35.1 SX10 MXN10MA4**	326	**A102_35.1 P71 BXN71MA4**	327
42.0	54	1.9	32	3120			**A052_32.2 P71 BXN71MA4**	323
43.0	52	2.9	32	5500	**A102_32.2 SX10 MXN10MA4**	326	**A102_32.2 P71 BXN71MA4**	327
47.0	48	2.1	29	3030	**A102_28.6 SX10 MXN10MA4**	326	**A102_28.6 P71 BXN71MA4**	327
47	48.0	3.1	28.6	4970	**A102_28.6 SX10 MXN10MA4**	326	**A102_28.6 P71 BXN71MA4**	327
53	43.0	2.3	25.5	2940			**A052_25.5 P71 BXN71MA4**	323
56	40.0	2.5	23.8	2890			**A052_23.8 P71 BXN71MA4**	323
63	36.0	2.8	21.4	2810			**A052_21.4 P71 BXN71MA4**	323
72	31.0	3.2	18.6	2710			**A052_18.6 P71 BXN71MA4**	323
84	27.0	3.7	16.4	2620			**A052_16.4 P71 BXN71MA4**	323
99	23.0	4.4	13.9	2500			**A052_13.9 P71 BXN71MA4**	323
112	20.0	5.0	12.3	2420			**A052_12.3 P71 BXN71MA4**	323
131	17.2	5.8	10.6	2310			**A052_10.6 P71 BXN71MA4**	323
144	15.7	6.4	9.6	2260			**A052_9.6 P71 BXN71MA4**	323
162	13.9	7.2	8.5	2180			**A052_8.5 P71 BXN71MA4**	323
191	11.7	8.5	7.2	2070			**A052_7.2 P71 BXN71MA4**	323
218	10.3	9.7	6.3	1990			**A052_6.3 P71 BXN71MA4**	323
252	8.9	10.7	5.5	1900			**A052_5.5 P71 BXN71MA4**	323

0.37 kW

n_2 min^{-1}	M_2 Nm	S	i	R_{n2} N	IE2	IE3		IEC IE2	IEC IE3	
0.8	3939.0	1.3	1715.0	50000	**A704_1715 S1 ME1SB4**	**A704_1715 S1 MX1SB4**	358	**A704_1715 P71 BE71B4**	**A704_1715 P71 BX71B4**	359
0.9	3636.0	1.4	1583.0	50000	**A704_1583 S1 ME1SB4**	**A704_1583 S1 MX1SB4**	358	**A704_1583 P71 BE71B4**	**A704_1583 P71 BX71B4**	359
0.9	3577.0	2.2	1558.0	65000	**A804_1558 S1 ME1SB4**	**A804_1558 S1 MX1SB4**	361	**A804_1558 P71 BE71B4**	**A804_1558 P71 BX71B4**	362
1.0	3302.0	2.4	1438.0	65000	**A804_1438 S1 ME1SB4**	**A804_1438 S1 MX1SB4**	361	**A804_1438 P71 BE71B4**	**A804_1438 P71 BX71B4**	362
1.0	3091.0	1.6	1346.0	50000	**A704_1346 S1 ME1SB4**	**A704_1346 S1 MX1SB4**	358	**A704_1346 P71 BE71B4**	**A704_1346 P71 BX71B4**	359
1.0	3077.0	2.6	1340.0	65000	**A804_1340 S1 ME1SB4**	**A804_1340 S1 MX1SB4**	361	**A804_1340 P71 BE71B4**	**A804_1340 P71 BX71B4**	362
1.1	2853.0	1.8	1242.0	50000	**A704_1242 S1 ME1SB4**	**A704_1242 S1 MX1SB4**	358	**A704_1242 P71 BE71B4**	**A704_1242 P71 BX71B4**	359
1.1	2841.0	2.8	1237.0	65000	**A804_1237 S1 ME1SB4**	**A804_1237 S1 MX1SB4**	361	**A804_1237 P71 BE71B4**	**A804_1237 P71 BX71B4**	362
1.2	2668.0	1.9	1161.0	50000	**A704_1161 S1 ME1SB4**	**A704_1161 S1 MX1SB4**	358	**A704_1161 P71 BE71B4**	**A704_1161 P71 BX71B4**	359
1.3	2492.0	3.2	1085.0	65000	**A804_1085 S1 ME1SB4**	**A804_1085 S1 MX1SB4**	361	**A804_1085 P71 BE71B4**	**A804_1085 P71 BX71B4**	362
1.3	2462.0	2.0	1072.0	50000	**A704_1072 S1 ME1SB4**	**A704_1072 S1 MX1SB4**	358	**A704_1072 P71 BE71B4**	**A704_1072 P71 BX71B4**	359
1.4	2300.0	3.5	1001.0	65000	**A804_1001 S1 ME1SB4**	**A804_1001 S1 MX1SB4**	361	**A804_1001 P71 BE71B4**	**A804_1001 P71 BX71B4**	362
1.5	2128.0	2.3	926.5	50000	**A704_926.5 S1 ME1SB4**	**A704_926.5 S1 MX1SB4**	358	**A704_926.5 P71 BE71B4**	**A704_926.5 P71 BX71B4**	359
1.6	1964.0	2.5	855.3	50000	**A704_855.3 S1 ME1SB4**	**A704_855.3 S1 MX1SB4**	358	**A704_855.3 P71 BE71B4**	**A704_855.3 P71 BX71B4**	359
1.8	1754.0	2.8	763.9	50000	**A704_763.9 S1 ME1SB4**	**A704_763.9 S1 MX1SB4**	358	**A704_763.9 P71 BE71B4**	**A704_763.9 P71 BX71B4**	359
1.8	1735.0	1.6	755.4	30000	**A604_755.4 S1 ME1SB4**	**A604_755.4 S1 MX1SB4**	354	**A604_755.4 P71 BE71B4**	**A604_755.4 P71 BX71B4**	355
1.9	1626.0	0.9	707.9	20000	**A504_707.9 S1 ME1SB4**	**A504_707.9 S1 MX1SB4**	346	**A504_707.9 P71 BE71B4**	**A504_707.9 P71 BX71B4**	347
1.9	1619.0	3.1	705.1	50000	**A704_705.1 S1 ME1SB4**	**A704_705.1 S1 MX1SB4**	358	**A704_705.1 P71 BE71B4**	**A704_705.1 P71 BX71B4**	359
2.0	1601.0	1.7	697.3	30000	**A604_697.3 S1 ME1SB4**	**A604_697.3 S1 MX1SB4**	354	**A604_697.3 P71 BE71B4**	**A604_697.3 P71 BX71B4**	355
2.1	1481.0	3.4	644.6	50000	**A704_644.6 S1 ME1SB4**	**A704_644.6 S1 MX1SB4**	358	**A704_644.6 P71 BE71B4**	**A704_644.6 P71 BX71B4**	359
2.2	1457.0	1.9	634.6	30000	**A604_634.6 S1 ME1SB4**	**A604_634.6 S1 MX1SB4**	354	**A604_634.6 P71 BE71B4**	**A604_634.6 P71 BX71B4**	355

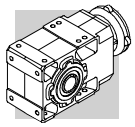

0.37 kW

n_2 min-1	M_2 Nm	S	i	R_{n2} N	IE2	IE3		IEC IE2	IEC IE3	
2.2	1450.0	1.0	631.2	20000	**A504_631.2 S1 ME1SB4**	**A504_631.2 S1 MX1SB4**	346	**A504_631.2 P71 BE71B4**	**A504_631.2 P71 BX71B4**	347
2.3	1345.0	2.1	585.8	30000	**A604_585.8 S1 ME1SB4**	**A604_585.8 S1 MX1SB4**	354	**A604_585.8 P71 BE71B4**	**A604_585.8 P71 BX71B4**	355
2.4	1319.0	1.1	574.2	20000	**A504_574.2 S1 ME1SB4**	**A504_574.2 S1 MX1SB4**	346	**A504_574.2 P71 BE71B4**	**A504_574.2 P71 BX71B4**	347
2.5	1245.0	2.2	542.0	30000	**A604_542.0 S1 ME1SB4**	**A604_542.0 S1 MX1SB4**	354	**A604_542.0 P71 BE71B4**	**A604_542.0 P71 BX71B4**	355
2.6	1216.0	1.2	529.5	20000	**A504_529.5 S1 ME1SB4**	**A504_529.5 S1 MX1SB4**	346	**A504_529.5 P71 BE71B4**	**A504_529.5 P71 BX71B4**	347
2.7	1149.0	2.4	500.3	30000	**A604_500.3 S1 ME1SB4**	**A604_500.3 S1 MX1SB4**	354	**A604_500.3 P71 BE71B4**	**A604_500.3 P71 BX71B4**	355
2.8	1106.0	1.4	481.6	20000	**A504_481.6 S1 ME1SB4**	**A504_481.6 S1 MX1SB4**	346	**A504_481.6 P71 BE71B4**	**A504_481.6 P71 BX71B4**	347
3.1	1026.0	1.5	446.8	20000	**A504_446.8 S1 ME1SB4**	**A504_446.8 S1 MX1SB4**	346	**A504_446.8 P71 BE71B4**	**A504_446.8 P71 BX71B4**	347
3.1	1007.0	2.8	438.4	30000	**A604_438.4 S1 ME1SB4**	**A604_438.4 S1 MX1SB4**	354	**A604_438.4 P71 BE71B4**	**A604_438.4 P71 BX71B4**	355
3.4	933.0	1.6	406.4	20000	**A504_406.4 S1 ME1SB4**	**A504_406.4 S1 MX1SB4**	346	**A504_406.4 P71 BE71B4**	**A504_406.4 P71 BX71B4**	347
3.4	929.0	3.0	404.7	30000	**A604_404.7 S1 ME1SB4**	**A604_404.7 S1 MX1SB4**	354	**A604_404.7 P71 BE71B4**	**A604_404.7 P71 BX71B4**	355
3.6	885.0	1.0	376.8	15000	**A413_376.8 S1 ME1SB4**	**A413_376.8 S1 MX1SB4**	342	**A413_376.8 P71 BE71B4**	**A413_376.8 P71 BX71B4**	343
3.7	840.0	1.8	365.6	20000	**A504_365.6 S1 ME1SB4**	**A504_365.6 S1 MX1SB4**	346	**A504_365.6 P71 BE71B4**	**A504_365.6 P71 BX71B4**	347
3.9	807.0	3.5	351.2	30000	**A604_351.2 S1 ME1SB4**	**A604_351.2 S1 MX1SB4**	354	**A604_351.2 P71 BE71B4**	**A604_351.2 P71 BX71B4**	355
4.1	764.0	2.0	332.6	20000	**A504_332.6 S1 ME1SB4**	**A504_332.6 S1 MX1SB4**	346	**A504_332.6 P71 BE71B4**	**A504_332.6 P71 BX71B4**	347
4.2	761.0	1.1	324.2	15000	**A413_324.2 S1 ME1SB4**	**A413_324.2 S1 MX1SB4**	342	**A413_324.2 P71 BE71B4**	**A413_324.2 P71 BX71B4**	343
4.7	685.0	1.2	291.7	15000	**A413_291.7 S1 ME1SB4**	**A413_291.7 S1 MX1SB4**	342	**A413_291.7 P71 BE71B4**	**A413_291.7 P71 BX71B4**	343
4.8	659.0	2.3	286.8	20000	**A504_286.8 S1 ME1SB4**	**A504_286.8 S1 MX1SB4**	346	**A504_286.8 P71 BE71B4**	**A504_286.8 P71 BX71B4**	347
5.1	636.0	0.9	270.7	12000	**A353_270.7 S1 ME1SB4**	**A353_270.7 S1 MX1SB4**	338	**A353_270.7 P71 BE71B4**	**A353_270.7 P71 BX71B4**	339
5.2	616.0	1.4	262.5	15000	**A413_262.5 S1 ME1SB4**	**A413_262.5 S1 MX1SB4**	342	**A413_262.5 P71 BE71B4**	**A413_262.5 P71 BX71B4**	343
5.3	599.0	2.5	260.9	20000	**A504_260.9 S1 ME1SB4**	**A504_260.9 S1 MX1SB4**	346	**A504_260.9 P71 BE71B4**	**A504_260.9 P71 BX71B4**	347
5.5	583.0	1.0	248.1	12000	**A353_248.1 S1 ME1SB4**	**A353_248.1 S1 MX1SB4**	338	**A353_248.1 P71 BE71B4**	**A353_248.1 P71 BX71B4**	339
5.7	565.0	1.5	240.6	15000	**A413_240.6 S1 ME1SB4**	**A413_240.6 S1 MX1SB4**	342	**A413_240.6 P71 BE71B4**	**A413_240.6 P71 BX71B4**	343
5.9	533.0	2.8	232.0	20000	**A504_232.0 S1 ME1SB4**	**A504_232.0 S1 MX1SB4**	346	**A504_232.0 P71 BE71B4**	**A504_232.0 P71 BX71B4**	347
6.1	524.0	1.1	223.2	12000	**A353_223.2 S1 ME1SB4**	**A353_223.2 S1 MX1SB4**	338	**A353_223.2 P71 BE71B4**	**A353_223.2 P71 BX71B4**	339
6.3	511	1.7	217.4	15000	**A413_217.4 S1 ME1SB4**	**A413_217.4 S1 MX1SB4**	342	**A413_217.4 P71 BE71B4**	**A413_217.4 P71 BX71B4**	343
6.5	485	3.1	211.0	20000	**A504_211.0 S1 ME1SB4**	**A504_211.0 S1 MX1SB4**	346	**A504_211.0 P71 BE71B4**	**A504_211.0 P71 BX71B4**	347
6.8	474	1.3	201.8	12000	**A353_201.8 S1 ME1SB4**	**A353_201.8 S1 MX1SB4**	338	**A353_201.8 P71 BE71B4**	**A353_201.8 P71 BX71B4**	339
6.9	464	1.8	197.5	15000	**A413_197.5 S1 ME1SB4**	**A413_197.5 S1 MX1SB4**	342	**A413_197.5 P71 BE71B4**	**A413_197.5 P71 BX71B4**	343
7.2	448	3.4	190.6	20000	**A503_190.6 S1 ME1SB4**	**A503_190.6 S1 MX1SB4**	346	**A503_190.6 P71 BE71B4**	**A503_190.6 P71 BX71B4**	347
7.3	442	1.4	188.3	12000	**A353_188.3 S1 ME1SB4**	**A353_188.3 S1 MX1SB4**	338	**A353_188.3 P71 BE71B4**	**A353_188.3 P71 BX71B4**	339
7.4	433	2.0	184.4	15000	**A413_184.4 S1 ME1SB4**	**A413_184.4 S1 MX1SB4**	342	**A413_184.4 P71 BE71B4**	**A413_184.4 P71 BX71B4**	343
8.0	403	1.5	171.8	12000	**A353_171.8 S1 ME1SB4**	**A353_171.8 S1 MX1SB4**	338	**A353_171.8 P71 BE71B4**	**A353_171.8 P71 BX71B4**	339
9.1	354	0.9	150.7	9600	**A303_150.7 S1 ME1SB4**	**A303_150.7 S1 MX1SB4**	334	**A303_150.7 P71 BE71B4**	**A303_150.7 P71 BX71B4**	335
9.1	354	1.7	150.6	12000	**A353_150.6 S1 ME1SB4**	**A353_150.6 S1 MX1SB4**	338	**A353_150.6 P71 BE71B4**	**A353_150.6 P71 BX71B4**	339
9.3	345	2.5	146.9	15000	**A413_146.9 S1 ME1SB4**	**A413_146.9 S1 MX1SB4**	342	**A413_146.9 P71 BE71B4**	**A413_146.9 P71 BX71B4**	343
10.0	323	1.0	137.4	9600	**A303_137.4 S1 ME1SB4**	**A303_137.4 S1 MX1SB4**	334	**A303_137.4 P71 BE71B4**	**A303_137.4 P71 BX71B4**	335
10.0	320	1.8	136.3	12000	**A353_136.3 S1 ME1SB4**	**A353_136.3 S1 MX1SB4**	338	**A353_136.3 P71 BE71B4**	**A353_136.3 P71 BX71B4**	339
11.4	283	1.1	120.5	9600	**A303_120.5 S1 ME1SB4**	**A303_120.5 S1 MX1SB4**	334	**A303_120.5 P71 BE71B4**	**A303_120.5 P71 BX71B4**	335
11.7	275	2.0	116.9	12000	**A353_116.9 S1 ME1SB4**	**A353_116.9 S1 MX1SB4**	338	**A353_116.9 P71 BE71B4**	**A353_116.9 P71 BX71B4**	339
11.8	272	3.1	115.9	15000	**A413_115.9 S1 ME1SB4**	**A413_115.9 S1 MX1SB4**	342	**A413_115.9 P71 BE71B4**	**A413_115.9 P71 BX71B4**	343
12.6	256	1.2	109.1	9600	**A303_109.1 S1 ME1SB4**	**A303_109.1 S1 MX1SB4**	334	**A303_109.1 P71 BE71B4**	**A303_109.1 P71 BX71B4**	335
13.0	248	2.1	105.5	12000	**A353_105.5 S1 ME1SB4**	**A353_105.5 S1 MX1SB4**	338	**A353_105.5 P71 BE71B4**	**A353_105.5 P71 BX71B4**	339
14.1	237	1.3	97.5	9600				**A302_97.5 P71 BE71B4**	**A302_97.5 P71 BX71B4**	335
14.3	232	2.3	95.6	12000	**A352_95.6 S1 ME1SB4**	**A352_95.6 S1 MX1SB4**	338	**A352_95.6 P71 BE71B4**	**A352_95.6 P71 BX71B4**	339
15.8	210	1.5	86.7	9600				**A302_86.7 P71 BE71B4**	**A302_86.7 P71 BX71B4**	335
16.6	200	3.0	82.5	12000	**A352_82.5 S1 ME1SB4**	**A352_82.5 S1 MX1SB4**	338	**A352_82.5 P71 BE71B4**	**A352_82.5 P71 BX71B4**	339
17.2	194	1.1	79.9	6200				**A202_79.9 P71 BE71B4**	**A202_79.9 P71 BX71B4**	331
17.9	186	1.9	76.5	9600	**A302_76.5 S1 ME1SB4**	**A302_76.5 S1 MX1SB4**	334	**A302_76.5 P71 BE71B4**	**A302_76.5 P71 BX71B4**	335
18.4	180	3.3	74.3	12000	**A352_74.3 S1 ME1SB4**	**A352_74.3 S1 MX1SB4**	338	**A352_74.3 P71 BE71B4**	**A352_74.3 P71 BX71B4**	339
19.3	172	1.2	71.0	6200				**A202_71.0 P71 BE71B4**	**A202_71.0 P71 BX71B4**	331
20.7	160	2.4	66.0	9350	**A302_66.0 S1 ME1SB4**	**A302_66.0 S1 MX1SB4**	334	**A302_66.0 P71 BE71B4**	**A302_66.0 P71 BX71B4**	335
20.8	160	0.9	65.9	5500				**A102_65.9 P71 BE71B4**	**A102_65.9 P71 BX71B4**	327
21.7	153	1.6	63.1	6200	**A202_63.1 S1 ME1SB4**	**A202_63.1 S1 MX1SB4**	330	**A202_63.1 P71 BE71B4**	**A202_63.1 P71 BX71B4**	331
23.1	144	2.8	59.4	9080	**A302_59.4 S1 ME1SB4**	**A302_59.4 S1 MX1SB4**	334	**A302_59.4 P71 BE71B4**	**A302_59.4 P71 BX71B4**	335
23.4	142	1.1	58.6	5500				**A102_58.6 P71 BE71B4**	**A102_58.6 P71 BX71B4**	327
25.5	130	1.9	53.7	6090	**A202_53.7 S1 ME1SB4**	**A202_53.7 S1 MX1SB4**	330	**A202_53.7 P71 BE71B4**	**A202_53.7 P71 BX71B4**	331

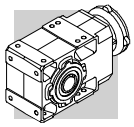

0.37 kW

n_2 min^{-1}	M_2 Nm	S	i	R_{n2} N	IE2	IE3		IEC IE2	IEC IE3	
26.0	128	3.2	52.7	8790	**A302_52.7 S1 ME1SB4**	**A302_52.7 S1 MX1SB4**	334	**A302_52.7 P71 BE71B4**	**A302_52.7 P71 BX71B4**	335
26.7	124	1.2	51.3	5490	**A102_51.3 S1 ME1SB4**	**A102_51.3 S1 MX1SB4**	326	**A102_51.3 P71 BE71B4**	**A102_51.3 P71 BX71B4**	327
28.4	117	2.1	48.3	5940	**A202_48.3 S1 ME1SB4**	**A202_48.3 S1 MX1SB4**	330	**A202_48.3 P71 BE71B4**	**A202_48.3 P71 BX71B4**	331
28.4	117	3.5	48.3	8580	**A302_48.3 S1 ME1SB4**	**A302_48.3 S1 MX1SB4**	334	**A302_48.3 P71 BE71B4**	**A302_48.3 P71 BX71B4**	335
30.0	110	0.9	45.4	3060	**A052_45.4 S1 ME1SB4**	**A052_45.4 S1 MX1SB4**	323	**A052_45.4 P71 BE71B4**	**A052_45.4 P71 BX71B4**	323
30.0	110	1.4	45.4	5350	**A102_45.4 S1 ME1SB4**	**A102_45.4 S1 MX1SB4**	326	**A102_45.4 P71 BE71B4**	**A102_45.4 P71 BX71B4**	327
32.0	105	2.4	43.2	5780	**A202_43.2 S1 ME1SB4**	**A202_43.2 S1 MX1SB4**	330	**A202_43.2 P71 BE71B4**	**A202_43.2 P71 BX71B4**	331
34.0	99	1.0	40.9	3020	**A052_40.9 S1 ME1SB4**	**A052_40.9 S1 MX1SB4**	323	**A052_40.9 P71 BE71B4**	**A052_40.9 P71 BX71B4**	323
34.0	99	1.5	40.9	5500	**A102_40.9 S1 ME1SB4**	**A102_40.9 S1 MX1SB4**	326	**A102_40.9 P71 BE71B4**	**A102_40.9 P71 BX71B4**	327
35.0	96	2.6	39.6	5650	**A202_39.6 S1 ME1SB4**	**A202_39.6 S1 MX1SB4**	330	**A202_39.6 P71 BE71B4**	**A202_39.6 P71 BX71B4**	331
39.0	86	2.9	35.4	5480	**A202_35.4 S1 ME1SB4**	**A202_35.4 S1 MX1SB4**	330	**A202_35.4 P71 BE71B4**	**A202_35.4 P71 BX71B4**	331
39.0	85	1.2	35.1	2950	**A052_35.1 S1 ME1SB4**	**A052_35.1 S1 MX1SB4**	323	**A052_35.1 P71 BE71B4**	**A052_35.1 P71 BX71B4**	323
39.0	85	1.8	35.1	5040	**A102_35.1 S1 ME1SB4**	**A102_35.1 S1 MX1SB4**	326	**A102_35.1 P71 BE71B4**	**A102_35.1 P71 BX71B4**	327
43.0	78	1.3	32.2	2900	**A052_32.2 S1 ME1SB4**	**A052_32.2 S1 MX1SB4**	323	**A052_32.2 P71 BE71B4**	**A052_32.2 P71 BX71B4**	323
43.0	78	1.9	32.2	5500	**A102_32.2 S1 ME1SB4**	**A102_32.2 S1 MX1SB4**	326	**A102_32.2 P71 BE71B4**	**A102_32.2 P71 BX71B4**	327
44.0	76	3.3	31.3	5310	**A202_31.3 S1 ME1SB4**	**A202_31.3 S1 MX1SB4**	330	**A202_31.3 P71 BE71B4**	**A202_31.3 P71 BX71B4**	331
47.0	71	3.5	29.2	5210	**A202_29.2 S1 ME1SB4**	**A202_29.2 S1 MX1SB4**	330	**A202_29.2 P71 BE71B4**	**A202_29.2 P71 BX71B4**	331
48.0	69	1.4	28.6	2840	**A052_28.6 S1 ME1SB4**	**A052_28.6 S1 MX1SB4**	323	**A052_28.6 P71 BE71B4**	**A052_28.6 P71 BX71B4**	323
48.0	69	2.2	28.6	4790	**A102_28.6 S1 ME1SB4**	**A102_28.6 S1 MX1SB4**	326	**A102_28.6 P71 BE71B4**	**A102_28.6 P71 BX71B4**	327
54.0	62	1.6	25.5	2770	**A052_25.5 S1 ME1SB4**	**A052_25.5 S1 MX1SB4**	323	**A052_25.5 P71 BE71B4**	**A052_25.5 P71 BX71B4**	323
54.0	62	2.4	25.5	5500	**A102_25.5 S1 ME1SB4**	**A102_25.5 S1 MX1SB4**	326	**A102_25.5 P71 BE71B4**	**A102_25.5 P71 BX71B4**	327
58.0	58	1.7	23.8	2730	**A052_23.8 S1 ME1SB4**	**A052_23.8 S1 MX1SB4**	323	**A052_23.8 P71 BE71B4**	**A052_23.8 P71 BX71B4**	323
58.0	58	2.6	23.8	4570	**A102_23.8 S1 ME1SB4**	**A102_23.8 S1 MX1SB4**	326	**A102_23.8 P71 BE71B4**	**A102_23.8 P71 BX71B4**	327
64.0	52	1.9	21.4	2670	**A052_21.4 S1 ME1SB4**	**A052_21.4 S1 MX1SB4**	323	**A052_21.4 P71 BE71B4**	**A052_21.4 P71 BX71B4**	323
64.0	52	2.9	21.4	5270	**A102_21.4 S1 ME1SB4**	**A102_21.4 S1 MX1SB4**	326	**A102_21.4 P71 BE71B4**	**A102_21.4 P71 BX71B4**	327
74.0	45	2.2	18.6	2590	**A052_18.6 S1 ME1SB4**	**A052_18.6 S1 MX1SB4**	323	**A052_18.6 P71 BE71B4**	**A052_18.6 P71 BX71B4**	323
74.0	45	3.3	18.6	4270	**A102_18.6 S1 ME1SB4**	**A102_18.6 S1 MX1SB4**	326	**A102_18.6 P71 BE71B4**	**A102_18.6 P71 BX71B4**	327
83.0	40	2.5	16.4	2510	**A052_16.4 S1 ME1SB4**	**A052_16.4 S1 MX1SB4**	323	**A052_16.4 P71 BE71B4**	**A052_16.4 P71 BX71B4**	323
98.0	34	3.0	13.9	2410	**A052_13.9 S1 ME1SB4**	**A052_13.9 S1 MX1SB4**	323	**A052_13.9 P71 BE71B4**	**A052_13.9 P71 BX71B4**	323
111.0	30	3.3	12.3	2350	**A052_12.3 S1 ME1SB4**	**A052_12.3 S1 MX1SB4**		**A052_12.3 P71 BE71B4**	**A052_12.3 P71 BX71B4**	323
130.0	26	3.9	10.6	2240	**A052_10.6 S1 ME1SB4**	**A052_10.6 S1 MX1SB4**		**A052_10.6 P71 BE71B4**	**A052_10.6 P71 BX71B4**	323
142.0	23	4.3	9.6	2190	**A052_9.6 S1 ME1SB4**	**A052_9.6 S1 MX1SB4**		**A052_9.6 P71 BE71B4**	**A052_9.6 P71 BX71B4**	323
161	21.0	4.8	8.5	2120	**A052_8.5 S1 ME1SB4**	**A052_8.5 S1 MX1SB4**	323	**A052_8.5 P71 BE71B4**	**A052_8.5 P71 BX71B4**	323
190	17.5	5.7	7.2	2030	**A052_7.2 S1 ME1SB4**	**A052_7.2 S1 MX1SB4**	323	**A052_7.2 P71 BE71B4**	**A052_7.2 P71 BX71B4**	323
216	15.4	6.5	6.3	1950	**A052_6.3 S1 ME1SB4**	**A052_6.3 S1 MX1SB4**	323	**A052_6.3 P71 BE71B4**	**A052_6.3 P71 BX71B4**	323
251	13.3	7.2	5.5	1870	**A052_5.5 S1 ME1SB4**	**A052_5.5 S1 MX1SB4**	323	**A052_5.5 P71 BE71B4**	**A052_5.5 P71 BX71B4**	323

0.37 kW

n_2 min^{-1}	M_2 Nm	S	i	R_{n2} N	IE3		IEC IE3	
0.8	3939	1.3	1715.0	50000			**A704_1715 P71 BXN71MB4**	359
0.9	3636	1.4	1583.0	50000			**A704_1583 P71 BXN71MB4**	359
0.9	3577	2.2	1558.0	65000			**A804_1558 P71 BXN71MB4**	362
1.0	3302	2.4	1438.0	65000			**A804_1438 P71 BXN71MB4**	362
1.0	3091	1.6	1346.0	50000			**A704_1346 P71 BXN71MB4**	359
1.0	3077	2.6	1340.0	65000			**A804_1340 P71 BXN71MB4**	362
1.1	2853	1.8	1242.0	50000			**A704_1242 P71 BXN71MB4**	359
1.1	2841	2.8	1237.0	65000			**A804_1237 P71 BXN71MB4**	362
1.2	2668	1.9	1161.0	50000			**A704_1161 P71 BXN71MB4**	359
1.3	2492	3.2	1085.0	65000			**A804_1085 P71 BXN71MB4**	362
1.3	2462	2.0	1072.0	50000			**A704_1072 P71 BXN71MB4**	359
1.4	2300	3.5	1001.0	65000			**A804_1001 P71 BXN71MB4**	362
1.5	2128	2.3	926.5	50000			**A704_926.5 P71 BXN71MB4**	359
1.6	1964	2.5	855.3	50000			**A704_855.3 P71 BXN71MB4**	359

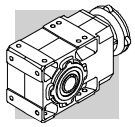

0.37 kW

n_2 min-1	M_2 Nm	S	i	R_{n2} N	IE3		IEC IE3	
1.8	1754	2.8	763.9	50000			**A704_763.9 P71 BXN71MB4**	359
1.8	1735	1.6	755.4	30000			**A604_755.4 P71 BXN71MB4**	355
1.9	1626	0.9	707.9	20000	**A504_707.9 SX10 MXN10MB4**	346	**A504_707.9 P71 BXN71MB4**	347
1.9	1619	3.1	705.1	50000			**A704_705.1 P71 BXN71MB4**	359
2.0	1601	1.7	697.3	30000			**A604_697.3 P71 BXN71MB4**	355
2.1	1481	3.4	644.6	50000			**A704_644.6 P71 BXN71MB4**	359
2.2	1457	1.9	634.6	30000			**A604_634.6 P71 BXN71MB4**	355
2.2	1450	1.0	631.2	20000	**A504_631.2 SX10 MXN10MB4**	346	**A504_631.2 P71 BXN71MB4**	347
2.3	1345	2.1	585.8	30000			**A604_585.8 P71 BXN71MB4**	355
2.4	1319	1.1	574.2	20000	**A504_574.2 SX10 MXN10MB4**	346	**A504_574.2 P71 BXN71MB4**	347
2.5	1245	2.2	542.0	30000			**A604_542.0 P71 BXN71MB4**	355
2.6	1216	1.2	529.5	20000	**A504_529.5 SX10 MXN10MB4**	346	**A504_529.5 P71 BXN71MB4**	347
2.7	1149	2.4	500.3	30000			**A604_500.3 P71 BXN71MB4**	355
2.8	1106	1.4	481.6	20000	**A504_481.6 SX10 MXN10MB4**	346	**A504_481.6 P71 BXN71MB4**	347
3.1	1026	1.5	446.8	20000	**A504_446.8 SX10 MXN10MB4**	346	**A504_446.8 P71 BXN71MB4**	347
3.1	1007	2.8	438.4	30000			**A604_438.4 P71 BXN71MB4**	355
3.4	933	1.6	406.4	20000	**A504_406.4 SX10 MXN10MB4**	346	**A504_406.4 P71 BXN71MB4**	347
3.4	929	3.0	404.7	30000			**A604_404.7 P71 BXN71MB4**	355
3.6	885	1.0	376.8	15000	**A413_376.8 SX10 MXN10MB4**	342	**A413_376.8 P71 BXN71MB4**	343
3.7	840	1.8	365.6	20000	**A504_365.6 SX10 MXN10MB4**	346	**A504_365.6 P71 BXN71MB4**	347
3.9	807	3.5	351.2	30000			**A604_351.2 P71 BXN71MB4**	355
4.1	764	2.0	332.6	20000	**A504_332.6 SX10 MXN10MB4**	346	**A504_332.6 P71 BXN71MB4**	347
4.2	761	1.1	324.2	15000	**A413_324.2 SX10 MXN10MB4**	342	**A413_324.2 P71 BXN71MB4**	343
4.7	685	1.2	291.7	15000	**A413_291.7 SX10 MXN10MB4**	342	**A413_291.7 P71 BXN71MB4**	343
4.8	659	2.3	286.8	20000	**A504_286.8 SX10 MXN10MB4**	346	**A504_286.8 P71 BXN71MB4**	347
5.1	636	0.9	270.7	12000	**A353_270.7 SX10 MXN10MB4**	338	**A353_270.7 P71 BXN71MB4**	339
5.2	616	1.4	262.5	15000	**A413_262.5 SX10 MXN10MB4**	342	**A413_262.5 P71 BXN71MB4**	343
5.3	599	2.5	260.9	20000	**A504_260.9 SX10 MXN10MB4**	346	**A504_260.9 P71 BXN71MB4**	347
5.5	583	1.0	248.1	12000	**A353_248.1 SX10 MXN10MB4**	338	**A353_248.1 P71 BXN71MB4**	339
5.7	565	1.5	240.6	15000	**A413_240.6 SX10 MXN10MB4**	342	**A413_240.6 P71 BXN71MB4**	343
5.9	533	2.8	232.0	20000	**A504_232.0 SX10 MXN10MB4**	346	**A504_232.0 P71 BXN71MB4**	347
6.1	524	1.1	223.2	12000	**A353_223.2 SX10 MXN10MB4**	338	**A353_223.2 P71 BXN71MB4**	339
6.3	511	1.7	217.4	15000	**A413_217.4 SX10 MXN10MB4**	342	**A413_217.4 P71 BXN71MB4**	343
6.5	485	3.1	211.0	20000	**A504_211.0 SX10 MXN10MB4**	346	**A504_211.0 P71 BXN71MB4**	347
6.8	474	1.3	201.8	12000	**A353_201.8 SX10 MXN10MB4**	338	**A353_201.8 P71 BXN71MB4**	339
6.9	464	1.8	197.5	15000	**A413_197.5 SX10 MXN10MB4**	342	**A413_197.5 P71 BXN71MB4**	343
7.2	448	3.4	190.6	20000			**A503_190.6 P71 BXN71MB4**	347
7.3	442	1.4	188.3	12000	**A353_188.3 SX10 MXN10MB4**	338	**A353_188.3 P71 BXN71MB4**	339
7.4	433	2.0	184.4	15000	**A413_184.4 SX10 MXN10MB4**	342	**A413_184.4 P71 BXN71MB4**	343
8.0	403	1.5	171.8	12000	**A353_171.8 SX10 MXN10MB4**	338	**A353_171.8 P71 BXN71MB4**	339
9.1	354	0.9	150.7	9600	**A303_150.7 SX10 MXN10MB4**	334	**A303_150.7 P71 BXN71MB4**	335
9.1	354	1.7	150.6	12000	**A353_150.6 SX10 MXN10MB4**	338	**A353_150.6 P71 BXN71MB4**	339
9.3	345.0	2.5	146.9	15000	**A413_146.9 SX10 MXN10MB4**	342	**A413_146.9 P71 BXN71MB4**	343
10.0	323.0	1.0	137.4	9600	**A303_137.4 SX10 MXN10MB4**	334	**A303_137.4 P71 BXN71MB4**	335
10.0	320.0	1.8	136.3	12000	**A353_136.3 SX10 MXN10MB4**	338	**A353_136.3 P71 BXN71MB4**	339
11.4	283.0	1.1	120.5	9600	**A303_120.5 SX10 MXN10MB4**	334	**A303_120.5 P71 BXN71MB4**	335
11.7	275.0	2.0	116.9	12000	**A353_116.9 SX10 MXN10MB4**	338	**A353_116.9 P71 BXN71MB4**	339
11.8	272.0	3.1	115.9	15000	**A413_115.9 SX10 MXN10MB4**	342	**A413_115.9 P71 BXN71MB4**	343
12.6	256.0	1.2	109.1	9600	**A303_109.1 SX10 MXN10MB4**	334	**A303_109.1 P71 BXN71MB4**	335
13.0	248.0	2.1	105.5	12000	**A353_105.5 SX10 MXN10MB4**	338	**A353_105.5 P71 BXN71MB4**	339
14.1	237.0	1.3	97.5	9600			**A302_97.5 P71 BXN71MB4**	335
14.3	232.0	2.3	95.6	12000	**A352_95.6 SX10 MXN10MB4**	338	**A352_95.6 P71 BXN71MB4**	339
15.8	210.0	1.5	86.7	9600			**A302_86.7 P71 BXN71MB4**	335
16.6	200.0	3.0	82.5	12000	**A352_82.5 SX10 MXN10MB4**	338	**A352_82.5 P71 BXN71MB4**	339
17.2	194.0	1.1	79.9	6200			**A202_79.9 P71 BXN71MB4**	331
17.9	186.0	1.9	76.5	9600	**A302_76.5 SX10 MXN10MB4**	334	**A302_76.5 P71 BXN71MB4**	335
18.4	180.0	3.3	74.3	12000	**A352_74.3 SX10 MXN10MB4**	338	**A352_74.3 P71 BXN71MB4**	339
19.3	172.0	1.2	71.0	6200			**A202_71.0 P71 BXN71MB4**	331
20.7	160.0	2.4	66.0	9350	**A302_66.0 SX10 MXN10MB4**	334	**A302_66.0 P71 BXN71MB4**	335
20.8	160.0	0.9	65.9	5500			**A102_65.9 P71 BXN71MB4**	327
21.7	153.0	1.6	63.1	6200	**A202_63.1 SX10 MXN10MB4**	330	**A202_63.1 P71 BXN71MB4**	331

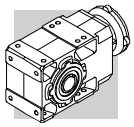

0.37 kW

n_2 min-1	M_2 Nm	S	i	R_{n2} N	IE3		IEC IE3	
23.1	144.0	2.8	59.4	9080	**A302_59.4 SX10 MXN10MB4**	334	**A302_59.4 P71 BXN71MB4**	335
23.4	142.0	1.1	58.6	5500			**A102_58.6 P71 BXN71MB4**	327
25.5	130.0	1.9	53.7	6090	**A202_53.7 SX10 MXN10MB4**	330	**A202_53.7 P71 BXN71MB4**	331
26.0	128.0	3.2	52.7	8790	**A302_52.7 SX10 MXN10MB4**	334	**A302_52.7 P71 BXN71MB4**	335
26.7	124.0	1.2	51.3	5490	**A102_51.3 SX10 MXN10MB4**	326	**A102_51.3 P71 BXN71MB4**	327
28.4	117.0	2.1	48.3	5940	**A202_48.3 SX10 MXN10MB4**	330	**A202_48.3 P71 BXN71MB4**	331
28.4	117.0	3.5	48.3	8580	**A302_48.3 SX10 MXN10MB4**	334	**A302_48.3 P71 BXN71MB4**	335
30.0	110.0	0.9	45.4	3060			**A052_45.4 P71 BXN71MB4**	323
30.0	110.0	1.4	45.4	5350	**A102_45.4 SX10 MXN10MB4**	326	**A102_45.4 P71 BXN71MB4**	327
32.0	105.0	2.4	43.2	5780	**A202_43.2 SX10 MXN10MB4**	330	**A202_43.2 P71 BXN71MB4**	331
34.0	99.0	1.0	40.9	3020			**A052_40.9 P71 BXN71MB4**	323
34.0	99.0	1.5	40.9	5500	**A102_40.9 SX10 MXN10MB4**	326	**A102_40.9 P71 BXN71MB4**	327
35.0	96.0	2.6	39.6	5650	**A202_39.6 SX10 MXN10MB4**	330	**A202_39.6 P71 BXN71MB4**	331
39.0	86.0	2.9	35.4	5480	**A202_35.4 SX10 MXN10MB4**	330	**A202_35.4 P71 BXN71MB4**	331
39.0	85.0	1.2	35.1	2950			**A052_35.1 P71 BXN71MB4**	323
39.0	85.0	1.8	35.1	5040	**A102_35.1 SX10 MXN10MB4**	326	**A102_35.1 P71 BXN71MB4**	327
43.0	78.0	1.3	32.2	2900			**A052_32.2 P71 BXN71MB4**	323
43.0	78.0	1.9	32.2	5500	**A102_32.2 SX10 MXN10MB4**	326	**A102_32.2 P71 BXN71MB4**	327
44.0	76.0	3.3	31.3	5310	**A202_31.3 SX10 MXN10MB4**	330	**A202_31.3 P71 BXN71MB4**	331
47.0	71.0	3.5	29.2	5210	**A202_29.2 SX10 MXN10MB4**	330	**A202_29.2 P71 BXN71MB4**	331
48.0	69.0	1.4	28.6	2840			**A052_28.6 P71 BXN71MB4**	323
48.0	69.0	2.2	28.6	4790	**A102_28.6 SX10 MXN10MB4**	326	**A102_28.6 P71 BXN71MB4**	327
54.0	62.0	1.6	25.5	2770			**A052_25.5 P71 BXN71MB4**	323
54.0	62.0	2.4	25.5	5500	**A102_25.5 SX10 MXN10MB4**	326	**A102_25.5 P71 BXN71MB4**	327
58.0	58.0	1.7	23.8	2730			**A052_23.8 P71 BXN71MB4**	323
58.0	58.0	2.6	23.8	4570	**A102_23.8 SX10 MXN10MB4**	326	**A102_23.8 P71 BXN71MB4**	327
64.0	52.0	1.9	21.4	2670			**A052_21.4 P71 BXN71MB4**	323
64.0	52.0	2.9	21.4	5270	**A102_21.4 SX10 MXN10MB4**	326	**A102_21.4 P71 BXN71MB4**	327
74.0	45.0	2.2	18.6	2590			**A052_18.6 P71 BXN71MB4**	323
74.0	45.0	3.3	18.6	4270	**A102_18.6 SX10 MXN10MB4**	326	**A102_18.6 P71 BXN71MB4**	327
83.0	40.0	2.5	16.4	2510			**A052_16.4 P71 BXN71MB4**	323
98.0	34.0	3.0	13.9	2410			**A052_13.9 P71 BXN71MB4**	323
111.0	30.0	3.3	12.3	2350			**A052_12.3 P71 BXN71MB4**	323
130.0	26.0	3.9	10.6	2240			**A052_10.6 P71 BXN71MB4**	323
142.0	23.0	4.3	9.6	2190			**A052_9.6 P71 BXN71MB4**	323
161.0	21.0	4.8	8.5	2120			**A052_8.5 P71 BXN71MB4**	323
190.0	17.5	5.7	7.2	2030			**A052_7.2 P71 BXN71MB4**	323
216.0	15.4	6.5	6.3	1950			**A052_6.3 P71 BXN71MB4**	323
251.0	13.3	7.2	5.5	1870			**A052_5.5 P71 BXN71MB4**	323

0.55 kW

n_2 min-1	M_2 Nm	S	i	R_{n2} N	IE2	IE3		IEC IE2	IE3	
0.8	5813	0.9	1715	50000	**A704_1715 S2 ME2SA4**	**A704_1715 S2 MX2SA4**	358	**A704_1715 P80 BE80A4**	**A704_1715 P80 BX80A4**	359
0.9	5532	2.5	1632	75000	**A904_1632 S2 ME2SA4**	**A904_1632 S2 MX2SA4**	364	**A904_1632 P80 BE80A4**	**A904_1632 P80 BX80A4**	365
0.9	5365	0.9	1583	50000	**A704_1583 S2 ME2SA4**	**A704_1583 S2 MX2SA4**	358	**A704_1583 P80 BE80A4**	**A704_1583 P80 BX80A4**	359
0.9	5279	1.5	1558	65000	**A804_1558 S2 ME2SA4**	**A804_1558 S2 MX2SA4**	361	**A804_1558 P80 BE80A4**	**A804_1558 P80 BX80A4**	362
0.9	5070	2.8	1507	75000	**A904_1507 S2 ME2SA4**	**A904_1507 S2 MX2SA4**	364	**A904_1507 P80 BE80A4**	**A904_1507 P80 BX80A4**	365
1.0	4873	1.6	1438	65000	**A804_1438 S2 ME2SA4**	**A804_1438 S2 MX2SA4**	361	**A804_1438 P80 BE80A4**	**A804_1438 P80 BX80A4**	362
1.0	4561	1.1	1346	50000	**A704_1346 S2 ME2SA4**	**A704_1346 S2 MX2SA4**	358	**A704_1346 P80 BE80A4**	**A704_1346 P80 BX80A4**	359
1.0	4541	1.8	1340	65000	**A804_1340 S2 ME2SA4**	**A804_1340 S2 MX2SA4**	361	**A804_1340 P80 BE80A4**	**A804_1340 P80 BX80A4**	362
1.0	4455	3.1	1324	75000	**A904_1324 S2 ME2SA4**	**A904_1324 S2 MX2SA4**	364	**A904_1324 P80 BE80A4**	**A904_1324 P80 BX80A4**	365
1.1	4211	1.2	1242	50000	**A704_1242 S2 ME2SA4**	**A704_1242 S2 MX2SA4**	358	**A704_1242 P80 BE80A4**	**A704_1242 P80 BX80A4**	359
1.1	4192	1.9	1237	65000	**A804_1237 S2 ME2SA4**	**A804_1237 S2 MX2SA4**	361	**A804_1237 P80 BE80A4**	**A804_1237 P80 BX80A4**	362
1.1	4112	3.4	1222	75000	**A904_1222 S2 ME2SA4**	**A904_1222 S2 MX2SA4**	364	**A904_1222 P80 BE80A4**	**A904_1222 P80 BX80A4**	365
1.2	3937	1.3	1161	50000	**A704_1161 S2 ME2SA4**	**A704_1161 S2 MX2SA4**	358	**A704_1161 P80 BE80A4**	**A704_1161 P80 BX80A4**	359
1.3	3677	2.2	1085	65000	**A804_1085 S2 ME2SA4**	**A804_1085 S2 MX2SA4**	361	**A804_1085 P80 BE80A4**	**A804_1085 P80 BX80A4**	362
1.3	3634	1.4	1072	50000	**A704_1072 S2 ME2SA4**	**A704_1072 S2 MX2SA4**	358	**A704_1072 P80 BE80A4**	**A704_1072 P80 BX80A4**	359

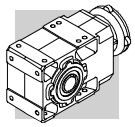

0.55 kW

n_2	M_2	S	i	R_{n2}	IE2	IE3		IEC IE2	IEC IE3	
min-1	Nm			N						
1.4	3394	2.4	1001	65000	**A804_1001 S2 ME2SA4**	**A804_1001 S2 MX2SA4**	361	**A804_1001 P80 BE80A4**	**A804_1001 P80 BX80A4**	362
1.5	3140	1.6	926.5	50000	**A704_926.5 S2 ME2SA4**	**A704_926.5 S2 MX2SA4**	358	**A704_926.5 P80 BE80A4**	**A704_926.5 P80 BX80A4**	359
1.5	3046	2.6	898.7	65000	**A804_898.7 S2 ME2SA4**	**A804_898.7 S2 MX2SA4**	361	**A804_898.7 P80 BE80A4**	**A804_898.7 P80 BX80A4**	362
1.6	2899	1.7	855.3	50000	**A704_855.3 S2 ME2SA4**	**A704_855.3 S2 MX2SA4**	358	**A704_855.3 P80 BE80A4**	**A704_855.3 P80 BX80A4**	359
1.7	2811	2.8	829.5	65000	**A804_829.5 S2 ME2SA4**	**A804_829.5 S2 MX2SA4**	361	**A804_829.5 P80 BE80A4**	**A804_829.5 P80 BX80A4**	362
1.8	2589	1.9	763.9	50000	**A704_763.9 S2 ME2SA4**	**A704_763.9 S2 MX2SA4**	358	**A704_763.9 P80 BE80A4**	**A704_763.9 P80 BX80A4**	359
1.8	2583	3.1	762.1	65000	**A804_762.1 S2 ME2SA4**	**A804_762.1 S2 MX2SA4**	361	**A804_762.1 P80 BE80A4**	**A804_762.1 P80 BX80A4**	362
1.8	2560	1.1	755.4	30000	**A604_755.4 S2 ME2SA4**	**A604_755.4 S2 MX2SA4**	354	**A604_755.4 P80 BE80A4**	**A604_755.4 P80 BX80A4**	355
2.0	2390	2.1	705.1	50000	**A704_705.1 S2 ME2SA4**	**A704_705.1 S2 MX2SA4**	358	**A704_705.1 P80 BE80A4**	**A704_705.1 P80 BX80A4**	359
2.0	2384	3.4	703.5	65000	**A804_703.5 S2 ME2SA4**	**A804_703.5 S2 MX2SA4**	361	**A804_703.5 P80 BE80A4**	**A804_703.5 P80 BX80A4**	362
2.0	2363	1.2	697.3	30000	**A604_697.3 S2 ME2SA4**	**A604_697.3 S2 MX2SA4**	354	**A604_697.3 P80 BE80A4**	**A604_697.3 P80 BX80A4**	355
2.1	2185	2.3	644.6	50000	**A704_644.6 S2 ME2SA4**	**A704_644.6 S2 MX2SA4**	358	**A704_644.6 P80 BE80A4**	**A704_644.6 P80 BX80A4**	359
2.2	2151	1.3	634.6	30000	**A604_634.6 S2 ME2SA4**	**A604_634.6 S2 MX2SA4**	354	**A604_634.6 P80 BE80A4**	**A604_634.6 P80 BX80A4**	355
2.3	2017	2.5	595	50000	**A704_595.0 S2 ME2SA4**	**A704_595.0 S2 MX2SA4**	358	**A704_595.0 P80 BE80A4**	**A704_595.0 P80 BX80A4**	359
2.4	1985	1.4	585.8	30000	**A604_585.8 S2 ME2SA4**	**A604_585.8 S2 MX2SA4**	354	**A604_585.8 P80 BE80A4**	**A604_585.8 P80 BX80A4**	355
2.5	1837	1.5	542	30000	**A604_542.0 S2 ME2SA4**	**A604_542.0 S2 MX2SA4**	354	**A604_542.0 P80 BE80A4**	**A604_542.0 P80 BX80A4**	355
2.7	1747	2.9	515.4	50000	**A704_515.4 S2 ME2SA4**	**A704_515.4 S2 MX2SA4**	358	**A704_515.4 P80 BE80A4**	**A704_515.4 P80 BX80A4**	359
2.8	1696	1.7	500.3	30000	**A604_500.3 S2 ME2SA4**	**A604_500.3 S2 MX2SA4**	354	**A604_500.3 P80 BE80A4**	**A604_500.3 P80 BX80A4**	355
2.9	1632	0.9	481.6	20000	**A504_481.6 S2 ME2SA4**	**A504_481.6 S2 MX2SA4**	346	**A504_481.6 P80 BE80A4**	**A504_481.6 P80 BX80A4**	347
2.9	1612	3.1	475.8	50000	**A704_475.8 S2 ME2SA4**	**A704_475.8 S2 MX2SA4**	358	**A704_475.8 P80 BE80A4**	**A704_475.8 P80 BX80A4**	359
3.1	1514	1.0	446.8	20000	**A504_446.8 S2 ME2SA4**	**A504_446.8 S2 MX2SA4**	346	**A504_446.8 P80 BE80A4**	**A504_446.8 P80 BX80A4**	347
3.1	1486	1.9	438.4	30000	**A604_438.4 S2 ME2SA4**	**A604_438.4 S2 MX2SA4**	354	**A604_438.4 P80 BE80A4**	**A604_438.4 P80 BX80A4**	355
3.4	1378	1.1	406.4	20000	**A504_406.4 S2 ME2SA4**	**A504_406.4 S2 MX2SA4**	346	**A504_406.4 P80 BE80A4**	**A504_406.4 P80 BX80A4**	347
3.4	1372	2.0	404.7	30000	**A604_404.7 S2 ME2SA4**	**A604_404.7 S2 MX2SA4**	354	**A604_404.7 P80 BE80A4**	**A604_404.7 P80 BX80A4**	355
3.8	1239	1.2	365.6	20000	**A504_365.6 S2 ME2SA4**	**A504_365.6 S2 MX2SA4**	346	**A504_365.6 P80 BE80A4**	**A504_365.6 P80 BX80A4**	347
3.9	1190	2.4	351.2	30000	**A604_351.2 S2 ME2SA4**	**A604_351.2 S2 MX2SA4**	354	**A604_351.2 P80 BE80A4**	**A604_351.2 P80 BX80A4**	355
4.1	1127	1.3	332.6	20000	**A504_332.6 S2 ME2SA4**	**A504_332.6 S2 MX2SA4**	346	**A504_332.6 P80 BE80A4**	**A504_332.6 P80 BX80A4**	347
4.3	1099	2.5	324.2	30000	**A604_324.2 S2 ME2SA4**	**A604_324.2 S2 MX2SA4**	354	**A604_324.2 P80 BE80A4**	**A604_324.2 P80 BX80A4**	355
4.8	972	1.5	286.8	20000	**A504_286.8 S2 ME2SA4**	**A504_286.8 S2 MX2SA4**	346	**A504_286.8 P80 BE80A4**	**A504_286.8 P80 BX80A4**	347
4.8	970	2.9	286.3	30000	**A604_286.3 S2 ME2SA4**	**A604_286.3 S2 MX2SA4**	354	**A604_286.3 P80 BE80A4**	**A604_286.3 P80 BX80A4**	355
5.2	896	3.1	264.3	30000	**A604_264.3 S2 ME2SA4**	**A604_264.3 S2 MX2SA4**	354	**A604_264.3 P80 BE80A4**	**A604_264.3 P80 BX80A4**	355
5.3	910	0.9	262.5	15000	**A413_262.5 S2 ME2SA4**	**A413_262.5 S2 MX2SA4**	342	**A413_262.5 P80 BE80A4**	**A413_262.5 P80 BX80A4**	343
5.3	884	1.7	260.9	20000	**A504_260.9 S2 ME2SA4**	**A504_260.9 S2 MX2SA4**	346	**A504_260.9 P80 BE80A4**	**A504_260.9 P80 BX80A4**	347
5.7	834	1.0	240.6	15000	**A413_240.6 S2 ME2SA4**	**A413_240.6 S2 MX2SA4**	342	**A413_240.6 P80 BE80A4**	**A413_240.6 P80 BX80A4**	343
5.9	786	1.9	232.0	20000	**A504_232.0 S2 ME2SA4**	**A504_232.0 S2 MX2SA4**	346	**A504_232.0 P80 BE80A4**	**A504_232.0 P80 BX80A4**	347
6.3	753	1.1	217.4	15000	**A413_217.4 S2 ME2SA4**	**A413_217.4 S2 MX2SA4**	342	**A413_217.4 P80 BE80A4**	**A413_217.4 P80 BX80A4**	343
6.5	715	2.1	211.0	20000	**A504_211.0 S2 ME2SA4**	**A504_211.0 S2 MX2SA4**	346	**A504_211.0 P80 BE80A4**	**A504_211.0 P80 BX80A4**	347
7.0	685	1.2	197.5	15000	**A413_197.5 S2 ME2SA4**	**A413_197.5 S2 MX2SA4**	342	**A413_197.5 P80 BE80A4**	**A413_197.5 P80 BX80A4**	343
7.1	673	3.0	194.2	30000	**A553_194.2 S2 ME2SA4**	**A553_194.2 S2 MX2SA4**	350	**A553_194.2 P80 BE80A4**	**A553_194.2 P80 BX80A4**	351
7.2	660	2.3	190.6	20000	**A503_190.6 S2 MX2SA4**	**A503_190.6 S2 ME2SA4**	346	**A503_190.6 P80 BE80A4**	**A503_190.6 P80 BX80A4**	347
7.3	653	0.9	188.3	12000	**A353_188.3 S2 MX2SA4**	**A353_188.3 S2 ME2SA4**	338	**A353_188.3 P80 BE80A4**	**A353_188.3 P80 BX80A4**	339
7.5	639	1.3	184.4	15000	**A413_184.4 S2 MX2SA4**	**A413_184.4 S2 ME2SA4**	342	**A413_184.4 P80 BE80A4**	**A413_184.4 P80 BX80A4**	343
7.9	607	3.3	175.0	30000	**A553_175.0 S2 MX2SA4**	**A553_175.0 S2 ME2SA4**	350	**A553_175.0 P80 BE80A4**	**A553_175.0 P80 BX80A4**	351
8.0	601	2.5	173.4	20000	**A503_173.4 S2 MX2SA4**	**A503_173.4 S2 ME2SA4**	346	**A503_173.4 P80 BE80A4**	**A503_173.4 P80 BX80A4**	347
8.0	595	1.0	171.8	12000	**A353_171.8 S2 MX2SA4**	**A353_171.8 S2 ME2SA4**	338	**A353_171.8 P80 BE80A4**	**A353_171.8 P80 BX80A4**	339
9.0	532	2.8	154.6	20000	**A503_154.6 S2 MX2SA4**	**A503_154.6 S2 ME2SA4**	346	**A503_154.6 P80 BE80A4**	**A503_154.6 P80 BX80A4**	347
9.2	522	1.1	150.6	12000	**A353_150.6 S2 MX2SA4**	**A353_150.6 S2 ME2SA4**	338	**A353_150.6 P80 BE80A4**	**A353_150.6 P80 BX80A4**	339
9.4	509	1.7	146.9	15000	**A413_146.9 S2 MX2SA4**	**A413_146.9 S2 ME2SA4**	342	**A413_146.9 P80 BE80A4**	**A413_146.9 P80 BX80A4**	343
9.9	484	3.1	140.6	20000	**A503_140.6 S2 MX2SA4**	**A503_140.6 S2 ME2SA4**	346	**A503_140.6 P80 BE80A4**	**A503_140.6 P80 BX80A4**	347
10.1	472	1.2	136.3	12000	**A353_136.3 S2 MX2SA4**	**A353_136.3 S2 ME2SA4**	338	**A353_136.3 P80 BE80A4**	**A353_136.3 P80 BX80A4**	339
10.7	446	3.4	129.7	20000	**A503_129.7 S2 MX2SA4**	**A503_129.7 S2 ME2SA4**	346	**A503_129.7 P80 BE80A4**	**A503_129.7 P80 BX80A4**	347
11.8	405	1.4	116.9	12000	**A353_116.9 S2 MX2SA4**	**A353_116.9 S2 ME2SA4**	338	**A353_116.9 P80 BE80A4**	**A353_116.9 P80 BX80A4**	339
11.9	402	2.1	115.9	15000	**A413_115.9 S2 MX2SA4**	**A413_115.9 S2 ME2SA4**	342	**A413_115.9 P80 BE80A4**	**A413_115.9 P80 BX80A4**	343
13.1	366	1.4	105.5	12000	**A353_105.5 S2 MX2SA4**	**A353_105.5 S2 ME2SA4**	338	**A353_105.5 P80 BE80A4**	**A353_105.5 P80 BX80A4**	339
14.2	349	0.9	97.5	9600				**A302_97.5 P80 BE80A4**	**A302_97.5 P80 BX80A4**	335
14.4	342	1.6	95.6	12000	**A352_95.6 S2 MX2SA4**	**A352_95.6 S2 ME2SA4**	338	**A352_95.6 P80 BE80A4**	**A352_95.6 P80 BX80A4**	339
14.9	321	2.5	92.8	15000	**A413_92.8 S2 MX2SA4**	**A413_92.8 S2 ME2SA4**	342	**A413_92.8 P80 BE80A4**	**A413_92.8 P80 BX80A4**	343
15.9	310	1.0	86.7	9420				**A302_86.7 P80 BE80A4**	**A302_86.7 P80 BX80A4**	335
16.7	295	2.0	82.5	12000	**A352_82.5 S2 MX2SA4**	**A352_82.5 S2 ME2SA4**	338	**A352_82.5 P80 BE80A4**	**A352_82.5 P80 BX80A4**	339
17.4	284	3.0	79.2	15000	**A412_79.2 S2 MX2SA4**	**A412_79.2 S2 ME2SA4**	342	**A412_79.2 P80 BE80A4**	**A412_79.2 P80 BX80A4**	343
18.0	274	1.3	76.5	9180	**A302_76.5 S2 MX2SA4**	**A302_76.5 S2 ME2SA4**	334	**A302_76.5 P80 BE80A4**	**A302_76.5 P80 BX80A4**	335
18.6	266	2.3	74.3	12000	**A352_74.3 S2 MX2SA4**	**A352_74.3 S2 ME2SA4**	338	**A352_74.3 P80 BE80A4**	**A352_74.3 P80 BX80A4**	339
19.4	255	3.3	71.3	15000	**A412_71.3 S2 MX2SA4**	**A412_71.3 S2 ME2SA4**	342	**A412_71.3 P80 BE80A4**	**A412_71.3 P80 BX80A4**	343
20.9	236	1.6	66.0	8880	**A302_66.0 S2 MX2SA4**	**A302_66.0 S2 ME2SA4**	334	**A302_66.0 P80 BE80A4**	**A302_66.0 P80 BX80A4**	335
21.0	236	2.5	65.8	12000	**A352_65.8 S2 MX2SA4**	**A352_65.8 S2 ME2SA4**	338	**A352_65.8 P80 BE80A4**	**A352_65.8 P80 BX80A4**	339

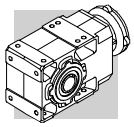

0.55 kW

n_2 min^{-1}	M_2 Nm	S	i	R_{n2} N	IE2	IE3		IEC IE2	IEC IE3	
21.9	226	1.1	63.1	5840	**A202_63.1 S2 MX2SA4**	**A202_63.1 S2 ME2SA4**	330	**A202_63.1 P80 BE80A4**	**A202_63.1 P80 BX80A4**	331
22.9	216	2.8	60.4	12000	**A352_60.4 S2 MX2SA4**	**A352_60.4 S2 ME2SA4**	338	**A352_60.4 P80 BE80A4**	**A352_60.4 P80 BX80A4**	339
23.2	213	1.9	59.4	8660	**A302_59.4 S2 MX2SA4**	**A302_59.4 S2 ME2SA4**	334	**A302_59.4 P80 BE80A4**	**A302_59.4 P80 BX80A4**	335
25.4	194	3.1	54.3	12000	**A352_54.3 S2 MX2SA4**	**A352_54.3 S2 ME2SA4**	338	**A352_54.3 P80 BE80A4**	**A352_54.3 P80 BX80A4**	339
25.7	192	1.3	53.7	5670	**A202_53.7 S2 MX2SA4**	**A202_53.7 S2 ME2SA4**	330	**A202_53.7 P80 BE80A4**	**A202_53.7 P80 BX80A4**	331
26.2	189	2.2	52.7	8410	**A302_52.7 S2 MX2SA4**	**A302_52.7 S2 ME2SA4**	334	**A302_52.7 P80 BE80A4**	**A302_52.7 P80 BX80A4**	335
28.1	176	3.4	49.1	12000	**A352_49.1 S2 MX2SA4**	**A352_49.1 S2 ME2SA4**	338	**A352_49.1 P80 BE80A4**	**A352_49.1 P80 BX80A4**	339
28.6	173	1.4	48.3	5560	**A202_48.3 S2 MX2SA4**	**A202_48.3 S2 ME2SA4**	330	**A202_48.3 P80 BE80A4**	**A202_48.3 P80 BX80A4**	331
28.6	173	2.4	48.3	8230	**A302_48.3 S2 MX2SA4**	**A302_48.3 S2 ME2SA4**	334	**A302_48.3 P80 BE80A4**	**A302_48.3 P80 BX80A4**	335
30.0	163	0.9	45.4	4910	**A102_45.4 S2 MX2SA4**	**A102_45.4 S2 ME2SA4**	326	**A102_45.4 P80 BE80A4**	**A102_45.4 P80 BX80A4**	327
32.0	155	2.6	43.4	8010	**A302_43.4 S2 MX2SA4**	**A302_43.4 S2 ME2SA4**	334	**A302_43.4 P80 BE80A4**	**A302_43.4 P80 BX80A4**	335
32.0	155	1.6	43.2	5440	**A202_43.2 S2 MX2SA4**	**A202_43.2 S2 ME2SA4**	330	**A202_43.2 P80 BE80A4**	**A202_43.2 P80 BX80A4**	331
34.0	146	1.0	40.9	5500	**A102_40.9 S2 MX2SA4**	**A102_40.9 S2 ME2SA4**	326	**A102_40.9 P80 BE80A4**	**A102_40.9 P80 BX80A4**	327
35.0	142	1.8	39.6	5340	**A202_39.6 S2 MX2SA4**	**A202_39.6 S2 ME2SA4**	330	**A202_39.6 P80 BE80A4**	**A202_39.6 P80 BX80A4**	331
35.0	141	2.9	39.3	7800	**A302_39.3 S2 MX2SA4**	**A302_39.3 S2 ME2SA4**	334	**A302_39.3 P80 BE80A4**	**A302_39.3 P80 BX80A4**	335
38.0	131	3.1	36.6	7660	**A302_36.6 S2 MX2SA4**	**A302_36.6 S2 ME2SA4**	334	**A302_36.6 P80 BE80A4**	**A302_36.6 P80 BX80A4**	335
39.0	127	2.0	35.4	5200	**A202_35.4 S2 MX2SA4**	**A202_35.4 S2 ME2SA4**	330	**A202_35.4 P80 BE80A4**	**A202_35.4 P80 BX80A4**	331
39.0	126	1.2	35.1	4700	**A102_35.1 S2 MX2SA4**	**A102_35.1 S2 ME2SA4**	326	**A102_35.1 P80 BE80A4**	**A102_35.1 P80 BX80A4**	327
41.0	120	3.4	33.4	7480	**A302_33.4 S2 MX2SA4**	**A302_33.4 S2 ME2SA4**	334	**A302_33.4 P80 BE80A4**	**A302_33.4 P80 BX80A4**	335
43.0	115	1.3	32.2	5490	**A102_32.2 S2 MX2SA4**	**A102_32.2 S2 ME2SA4**	326	**A102_32.2 P80 BE80A4**	**A102_32.2 P80 BX80A4**	327
44.0	112	2.2	31.3	5060	**A202_31.3 S2 MX2SA4**	**A202_31.3 S2 ME2SA4**	330	**A202_31.3 P80 BE80A4**	**A202_31.3 P80 BX80A4**	331
47.0	105	2.4	29.2	4970	**A202_29.2 S2 MX2SA4**	**A202_29.2 S2 ME2SA4**	330	**A202_29.2 P80 BE80A4**	**A202_29.2 P80 BX80A4**	331
48.0	102	1	28.6	2550	**A052_28.6 S2 MX2SA4**	**A052_28.6 S2 ME2SA4**	323	**A052_28.6 P80 BE80A4**	**A052_28.6 P80 BX80A4**	323
48.0	102	1.5	28.6	4510	**A102_28.6 S2 MX2SA4**	**A102_28.6 S2 ME2SA4**	326	**A102_28.6 P80 BE80A4**	**A102_28.6 P80 BX80A4**	327
52.0	95	2.6	26.5	4850	**A202_26.5 S2 MX2SA4**	**A202_26.5 S2 ME2SA4**	330	**A202_26.5 P80 BE80A4**	**A202_26.5 P80 BX80A4**	331
54.0	91	1.1	25.5	2510	**A052_25.5 S2 MX2SA4**	**A052_25.5 S2 ME2SA4**	323	**A052_25.5 P80 BE80A4**	**A052_25.5 P80 BX80A4**	323
54.0	91	1.6	25.5	5230	**A102_25.5 S2 MX2SA4**	**A102_25.5 S2 ME2SA4**	326	**A102_25.5 P80 BE80A4**	**A102_25.5 P80 BX80A4**	327
58.0	85	1.2	23.8	2490	**A052_23.8 S2 MX2SA4**	**A052_23.8 S2 ME2SA4**	323	**A052_23.8 P80 BE80A4**	**A052_23.8 P80 BX80A4**	323
58.0	85	1.8	23.8	4330	**A102_23.8 S2 MX2SA4**	**A102_23.8 S2 ME2SA4**	326	**A102_23.8 P80 BE80A4**	**A102_23.8 P80 BX80A4**	327
60.0	83	3	23.1	4690	**A202_23.1 S2 MX2SA4**	**A202_23.1 S2 ME2SA4**	330	**A202_23.1 P80 BE80A4**	**A202_23.1 P80 BX80A4**	331
65.0	76	1.3	21.4	2450	**A052_21.4 S2 MX2SA4**	**A052_21.4 S2 ME2SA4**	323	**A052_21.4 P80 BE80A4**	**A052_21.4 P80 BX80A4**	323
65.0	76	2	21.4	5020	**A102_21.4 S2 MX2SA4**	**A102_21.4 S2 ME2SA4**	326	**A102_21.4 P80 BE80A4**	**A102_21.4 P80 BX80A4**	327
65.0	76	3.3	21.2	4590	**A202_21.2 S2 MX2SA4**	**A202_21.2 S2 ME2SA4**	330	**A202_21.2 P80 BE80A4**	**A202_21.2 P80 BX80A4**	331
74.0	66	1.5	18.6	2400	**A052_18.6 S2 MX2SA4**	**A052_18.6 S2 ME2SA4**	323	**A052_18.6 P80 BE80A4**	**A052_18.6 P80 BX80A4**	323
74.0	66	2.3	18.6	4090	**A102_18.6 S2 MX2SA4**	**A102_18.6 S2 ME2SA4**	326	**A102_18.6 P80 BE80A4**	**A102_18.6 P80 BX80A4**	327
84.0	59	1.7	16.4	2340	**A052_16.4 S2 MX2SA4**	**A052_16.4 S2 ME2SA4**	323	**A052_16.4 P80 BE80A4**	**A052_16.4 P80 BX80A4**	323
84.0	59	2.5	16.4	4710	**A102_16.4 S2 MX2SA4**	**A102_16.4 S2 ME2SA4**	326	**A102_16.4 P80 BE80A4**	**A102_16.4 P80 BX80A4**	327
99.0	50	2	13.9	2270	**A052_13.9 S2 MX2SA4**	**A052_13.9 S2 ME2SA4**	323	**A052_13.9 P80 BE80A4**	**A052_13.9 P80 BX80A4**	323
99.0	50	3	13.9	3800	**A102_13.9 S2 MX2SA4**	**A102_13.9 S2 ME2SA4**	326	**A102_13.9 P80 BE80A4**	**A102_13.9 P80 BX80A4**	327
112.0	44.0	2.3	12.3	2220	**A052_12.3 S2 ME2SA4**	**A052_12.3 S2 MX2SA4**	323	**A052_12.3 P80 BE80A4**	**A052_12.3 P80 BX80A4**	323
112.0	44.0	3.2	12.3	3670	**A102_12.3 S2 ME2SA4**	**A102_12.3 S2 MX2SA4**	326	**A102_12.3 P80 BE80A4**	**A102_12.3 P80 BX80A4**	327
131.0	38.0	2.6	10.6	2130	**A052_10.6 S2 ME2SA4**	**A052_10.6 S2 MX2SA4**	323	**A052_10.6 P80 BE80A4**	**A052_10.6 P80 BX80A4**	323
144.0	34.0	2.9	9.6	2100	**A052_9.6 S2 ME2SA4**	**A052_9.6 S2 MX2SA4**	323	**A052_9.6 P80 BE80A4**	**A052_9.6 P80 BX80A4**	323
162.0	30.0	3.3	8.5	2030	**A052_8.5 S2 ME2SA4**	**A052_8.5 S2 MX2SA4**	323	**A052_8.5 P80 BE80A4**	**A052_8.5 P80 BX80A4**	323
191.0	26.0	3.9	7.2	1950	**A052_7.2 S2 ME2SA4**	**A052_7.2 S2 MX2SA4**	323	**A052_7.2 P80 BE80A4**	**A052_7.2 P80 BX80A4**	323
218.0	23.0	4.4	6.3	1880	**A052_6.3 S2 ME2SA4**	**A052_6.3 S2 MX2SA4**	323	**A052_6.3 P80 BE80A4**	**A052_6.3 P80 BX80A4**	323
252.0	19.6	4.9	5.5	1810	**A052_5.5 S2 ME2SA4**	**A052_5.5 S2 MX2SA4**	323	**A052_5.5 P80 BE80A4**	**A052_5.5 P80 BX80A4**	323

0.55 kW

n_2 min^{-1}	M_2 Nm	S	i	R_{n2} N	IE3		IEC IE3	
0.8	5813.0	0.9	1715.0	50000			**A704_1715 P80 BXN80MA4**	359
0.9	5532.0	2.5	1632.0	75000			**A904_1632 P80 BXN80MA4**	365
0.9	5365.0	0.9	1583.0	50000			**A704_1583 P80 BXN80MA4**	359
0.9	5279.0	1.5	1558.0	65000			**A804_1558 P80 BXN80MA4**	362
0.9	5070.0	2.8	1507.0	75000			**A904_1507 P80 BXN80MA4**	365
1.0	4873.0	1.6	1438.0	65000			**A804_1438 P80 BXN80MA4**	362
1.0	4561.0	1.1	1346.0	50000			**A704_1346 P80 BXN80MA4**	359
1.0	4541.0	1.8	1340.0	65000			**A804_1340 P80 BXN80MA4**	362
1.0	4455.0	3.1	1324.0	75000			**A904_1324 P80 BXN80MA4**	365
1.1	4211.0	1.2	1242.0	50000			**A704_1242 P80 BXN80MA4**	359

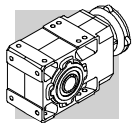

0.55 kW

n_2 min-1	M_2 Nm	S	i	R_{n2} N	IE3		IEC IE3	
1.1	4192.0	1.9	1237.0	65000			**A804_1237 P80 BXN80MA4**	362
1.1	4112.0	3.4	1222.0	75000			**A904_1222 P80 BXN80MA4**	365
1.2	3937.0	1.3	1161.0	50000			**A704_1161 P80 BXN80MA4**	359
1.3	3677.0	2.2	1085.0	65000			**A804_1085 P80 BXN80MA4**	362
1.3	3634.0	1.4	1072.0	50000			**A704_1072 P80 BXN80MA4**	359
1.4	3394.0	2.4	1001.0	65000			**A804_1001 P80 BXN80MA4**	362
1.5	3140.0	1.6	926.5	50000			**A704_926.5 P80 BXN80MA4**	359
1.5	3046	2.6	898.7	65000			**A804_898.7 P80 BXN80MA4**	362
1.6	2899	1.7	855.3	50000			**A704_855.3 P80 BXN80MA4**	359
1.7	2811	2.8	829.5	65000			**A804_829.5 P80 BXN80MA4**	362
1.8	2589	1.9	763.9	50000			**A704_763.9 P80 BXN80MA4**	359
1.8	2583	3.1	762.1	65000			**A804_762.1 P80 BXN80MA4**	362
1.8	2560	1.1	755.4	30000			**A604_755.4 P80 BXN80MA4**	355
2.0	2390	2.1	705.1	50000			**A704_705.1 P80 BXN80MA4**	359
2.0	2384	3.4	703.5	65000			**A804_703.5 P80 BXN80MA4**	362
2.0	2363	1.2	697.3	30000			**A604_697.3 P80 BXN80MA4**	355
2.1	2185	2.3	644.6	50000			**A704_644.6 P80 BXN80MA4**	359
2.2	2151	1.3	634.6	30000			**A604_634.6 P80 BXN80MA4**	355
2.3	2017	2.5	595.0	50000			**A704_595.0 P80 BXN80MA4**	359
2.4	1985	1.4	585.8	30000			**A604_585.8 P80 BXN80MA4**	355
2.5	1837	1.5	542.0	30000			**A604_542.0 P80 BXN80MA4**	355
2.7	1747	2.9	515.4	50000			**A704_515.4 P80 BXN80MA4**	359
2.8	1696	1.7	500.3	30000			**A604_500.3 P80 BXN80MA4**	355
2.9	1632	0.9	481.6	20000			**A504_481.6 P80 BXN80MA4**	347
2.9	1612	3.1	475.8	50000			**A704_475.8 P80 BXN80MA4**	359
3.1	1514	1.0	446.8	20000			**A504_446.8 P80 BXN80MA4**	347
3.1	1486	1.9	438.4	30000			**A604_438.4 P80 BXN80MA4**	355
3.4	1378	1.1	406.4	20000			**A504_406.4 P80 BXN80MA4**	347
3.4	1372	2.0	404.7	30000			**A604_404.7 P80 BXN80MA4**	355
3.8	1239	1.2	365.6	20000			**A504_365.6 P80 BXN80MA4**	347
3.9	1190	2.4	351.2	30000			**A604_351.2 P80 BXN80MA4**	355
4.1	1127	1.3	332.6	20000			**A504_332.6 P80 BXN80MA4**	347
4.3	1099	2.5	324.2	30000			**A604_324.2 P80 BXN80MA4**	355
4.8	972	1.5	286.8	20000			**A504_286.8 P80 BXN80MA4**	347
4.8	970	2.9	286.3	30000			**A604_286.3 P80 BXN80MA4**	355
5.2	896	3.1	264.3	30000			**A604_264.3 P80 BXN80MA4**	355
5.3	910	0.9	262.5	15000	**A413_262.5 S20 MXN20MA4**	342	**A413_262.5 P80 BXN80MA4**	343
5.3	884	1.7	260.9	20000			**A504_260.9 P80 BXN80MA4**	347
5.7	834	1.0	240.6	15000	**A413_240.6 S20 MXN20MA4**	342	**A413_240.6 P80 BXN80MA4**	343
5.9	786	1.9	232.0	20000			**A504_232.0 P80 BXN80MA4**	347
6.3	753	1.1	217.4	15000	**A413_217.4 S20 MXN20MA4**	342	**A413_217.4 P80 BXN80MA4**	343
6.5	715	2.1	211.0	20000			**A504_211.0 P80 BXN80MA4**	347
7.0	685	1.2	197.5	15000	**A413_197.5 S20 MXN20MA4**	342	**A413_197.5 P80 BXN80MA4**	343
7.1	673	3.0	194.2	30000			**A553_194.2 P80 BXN80MA4**	351
7.2	660	2.3	190.6	20000			**A503_190.6 P80 BXN80MA4**	347
7.3	653	0.9	188.3	12000	**A353_188.3 S20 MXN20MA4**	338	**A353_188.3 P80 BXN80MA4**	339
7.5	639	1.3	184.4	15000	**A413_184.4 S20 MXN20MA4**	342	**A413_184.4 P80 BXN80MA4**	343
7.9	607	3.3	175.0	30000			**A553_175.0 P80 BXN80MA4**	351
8.0	601	2.5	173.4	20000			**A503_173.4 P80 BXN80MA4**	347
8.0	595	1.0	171.8	12000	**A353_171.8 S20 MXN20MA4**	338	**A353_171.8 P80 BXN80MA4**	339
9.0	532	2.8	154.6	20000			**A503_154.6 P80 BXN80MA4**	347
9.2	522	1.1	150.6	12000	**A353_150.6 S20 MXN20MA4**	338	**A353_150.6 P80 BXN80MA4**	339
9.4	509	1.7	146.9	15000	**A413_146.9 S20 MXN20MA4**	342	**A413_146.9 P80 BXN80MA4**	343
9.9	484	3.1	140.6	20000			**A503_140.6 P80 BXN80MA4**	347
10.1	472	1.2	136.3	12000	**A353_136.3 S20 MXN20MA4**	338	**A353_136.3 P80 BXN80MA4**	339
10.7	446	3.4	129.7	20000			**A503_129.7 P80 BXN80MA4**	347
11.8	405	1.4	116.9	12000	**A353_116.9 S20 MXN20MA4**	338	**A353_116.9 P80 BXN80MA4**	339
11.9	402	2.1	115.9	15000	**A413_115.9 S20 MXN20MA4**	342	**A413_115.9 P80 BXN80MA4**	343
13.1	366	1.4	105.5	12000	**A353_105.5 S20 MXN20MA4**	338	**A353_105.5 P80 BXN80MA4**	339
14.2	349	0.9	97.5	9600			**A302_97.5 P80 BXN80MA4**	335
14.4	342	1.6	95.6	12000			**A352_95.6 P80 BXN80MA4**	339
14.9	321	2.5	92.8	15000	**A413_92.8 S20 MXN20MA4**	342	**A413_92.8 P80 BXN80MA4**	343
15.9	310	1.0	86.7	9420			**A302_86.7 P80 BXN80MA4**	335
16.7	295	2.0	82.5	12000			**A352_82.5 P80 BXN80MA4**	339
17.4	284	3.0	79.2	15000			**A412_79.2 P80 BXN80MA4**	343

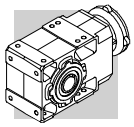

0.55 kW

n_2 min-1	M_2 Nm	S	i	R_{n2} N	IE3		IEC IE3	
18.0	274	1.3	76.5	9180			**A302_76.5 P80 BXN80MA4**	335
18.6	266	2.3	74.3	12000			**A352_74.3 P80 BXN80MA4**	339
19.4	255	3.3	71.3	15000			**A412_71.3 P80 BXN80MA4**	343
20.9	236	1.6	66.0	8880			**A302_66.0 P80 BXN80MA4**	335
21.0	236	2.5	65.8	12000			**A352_65.8 P80 BXN80MA4**	339
21.9	226	1.1	63.1	5840	**A202_63.1 S20 MXN20MA4**	330	**A202_63.1 P80 BXN80MA4**	331
22.9	216	2.8	60.4	12000			**A352_60.4 P80 BXN80MA4**	339
23.2	213.0	1.9	59.4	8660			**A302_59.4 P80 BXN80MA4**	335
25.4	194.0	3.1	54.3	12000			**A352_54.3 P80 BXN80MA4**	339
25.7	192.0	1.3	53.7	5670	**A202_53.7 S20 MXN20MA4**	330	**A202_53.7 P80 BXN80MA4**	331
26.2	189.0	2.2	52.7	8410			**A302_52.7 P80 BXN80MA4**	335
28.1	176.0	3.4	49.1	12000			**A352_49.1 P80 BXN80MA4**	339
28.6	173.0	1.4	48.3	5560	**A202_48.3 S20 MXN20MA4**	330	**A202_48.3 P80 BXN80MA4**	331
28.6	173.0	2.4	48.3	8230			**A302_48.3 P80 BXN80MA4**	335
30.0	163.0	0.9	45.4	4910	**A102_45.4 S20 MXN20MA4**	326	**A102_45.4 P80 BXN80MA4**	327
32.0	155.0	2.6	43.4	8010			**A302_43.4 P80 BXN80MA4**	335
32.0	155.0	1.6	43.2	5440	**A202_43.2 S20 MXN20MA4**	330	**A202_43.2 P80 BXN80MA4**	331
34.0	146.0	1.0	40.9	5500	**A102_40.9 S20 MXN20MA4**	326	**A102_40.9 P80 BXN80MA4**	327
35.0	142.0	1.8	39.6	5340	**A202_39.6 S20 MXN20MA4**	330	**A202_39.6 P80 BXN80MA4**	331
35.0	141.0	2.9	39.3	7800			**A302_39.3 P80 BXN80MA4**	335
38.0	131.0	3.1	36.6	7660			**A302_36.6 P80 BXN80MA4**	335
39.0	127.0	2.0	35.4	5200	**A202_35.4 S20 MXN20MA4**	330	**A202_35.4 P80 BXN80MA4**	331
39.0	126.0	1.2	35.1	4700	**A102_35.1 S20 MXN20MA4**	326	**A102_35.1 P80 BXN80MA4**	327
41.0	120.0	3.4	33.4	7480			**A302_33.4 P80 BXN80MA4**	335
43.0	115.0	1.3	32.2	5490	**A102_32.2 S20 MXN20MA4**	326	**A102_32.2 P80 BXN80MA4**	327
44.0	112.0	2.2	31.3	5060	**A202_31.3 S20 MXN20MA4**	330	**A202_31.3 P80 BXN80MA4**	331
47.0	105.0	2.4	29.2	4970	**A202_29.2 S20 MXN20MA4**	330	**A202_29.2 P80 BXN80MA4**	331
48.0	102.0	1.0	28.6	2550			**A052_28.6 P80 BXN80MA4**	323
48.0	102.0	1.5	28.6	4510	**A102_28.6 S20 MXN20MA4**	326	**A102_28.6 P80 BXN80MA4**	327
52.0	95.0	2.6	26.5	4850	**A202_26.5 S20 MXN20MA4**	330	**A202_26.5 P80 BXN80MA4**	331
54.0	91.0	1.1	25.5	2510			**A052_25.5 P80 BXN80MA4**	323
54.0	91.0	1.6	25.5	5230	**A102_25.5 S20 MXN20MA4**	326	**A102_25.5 P80 BXN80MA4**	327
58.0	85.0	1.2	23.8	2490			**A052_23.8 P80 BXN80MA4**	323
58.0	85.0	1.8	23.8	4330	**A102_23.8 S20 MXN20MA4**	326	**A102_23.8 P80 BXN80MA4**	327
60.0	83.0	3.0	23.1	4690	**A202_23.1 S20 MXN20MA4**	330	**A202_23.1 P80 BXN80MA4**	331
65.0	76.0	1.3	21.4	2450			**A052_21.4 P80 BXN80MA4**	323
65.0	76.0	2.0	21.4	5020	**A102_21.4 S20 MXN20MA4**	326	**A102_21.4 P80 BXN80MA4**	327
65.0	76.0	3.3	21.2	4590	**A202_21.2 S20 MXN20MA4**	330	**A202_21.2 P80 BXN80MA4**	331
74.0	66.0	1.5	18.6	2400			**A052_18.6 P80 BXN80MA4**	323
74.0	66.0	2.3	18.6	4090	**A102_18.6 S20 MXN20MA4**	326	**A102_18.6 P80 BXN80MA4**	327
84.0	59.0	1.7	16.4	2340			**A052_16.4 P80 BXN80MA4**	323
84.0	59.0	2.5	16.4	4710	**A102_16.4 S20 MXN20MA4**	326	**A102_16.4 P80 BXN80MA4**	327
99.0	50.0	2.0	13.9	2270			**A052_13.9 P80 BXN80MA4**	323
99.0	50.0	3.0	13.9	3800	**A102_13.9 S20 MXN20MA4**	326	**A102_13.9 P80 BXN80MA4**	327
112.0	44.0	2.3	12.3	2220			**A052_12.3 P80 BXN80MA4**	323
112.0	44.0	3.2	12.3	3670	**A102_12.3 S20 MXN20MA4**	326	**A102_12.3 P80 BXN80MA4**	327
131.0	38.0	2.6	10.6	2130			**A052_10.6 P80 BXN80MA4**	323
144.0	34.0	2.9	9.6	2100			**A052_9.6 P80 BXN80MA4**	323
162.0	30.0	3.3	8.5	2030			**A052_8.5 P80 BXN80MA4**	323
191.0	26.0	3.9	7.2	1950			**A052_7.2 P80 BXN80MA4**	323
218.0	23.0	4.4	6.3	1880			**A052_6.3 P80 BXN80MA4**	323
252.0	19.6	4.9	5.5	1810			**A052_5.5 P80 BXN80MA4**	323

0.75 kW

n_2 min-1	M_2 Nm	S	i	R_{n2} N	IE2	IE3		IEC IE2	IEC IE3	
0.58	11068	1.3	1632	75000	**A904_1632 S3 ME3SA6**		364	**A904_ 1632 P90 BE90S6**		365
0.62	10220	1.4	1507	75000	**A904_1507 S3 ME3SA6**		364	**A904_ 1507 P90 BE90S6**		365
0.71	8979	1.6	1324	75000	**A904_1324 S3 ME3SA6**		364	**A904_ 1324 P90 BE90S6**		365
0.77	8287	1.7	1222	75000	**A904_1222 S3 ME3SA6**		364	**A904_ 1222 P90 BE90S6**		365

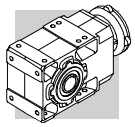

0.75 kW

n_2	M_2	S	i	R_{n2}	IE2	IE3		IEC IE2	IEC IE3	
min-1	Nm			N						
0.88	7264	1.9	1632	75000	**A904_1632 S2 ME2SB4**	**A904_1632 S2 MX2SB4**	364	**A904_1632 P80 BE80B4**	**A904_1632 P80 BX80B4**	365
0.92	6932	1.2	1558	65000	**A804_1558 S2 ME2SB4**	**A804_1558 S2 MX2SB4**	361	**A804_1558 P80 BE80B4**	**A804_1558 P80 BX80B4**	362
0.95	6705	2.1	1507	75000	**A904_1507 S2 ME2SB4**	**A904_1507 S2 MX2SB4**	364	**A904_1507 P80 BE80B4**	**A904_1507 P80 BX80B4**	365
0.99	6398	1.3	1438	65000	**A804_1438 S2 ME2SB4**	**A804_1438 S2 MX2SB4**	361	**A804_1438 P80 BE80B4**	**A804_1438 P80 BX80B4**	362
1.1	5963	1.3	1340	65000	**A804_1340 S2 ME2SB4**	**A804_1340 S2 MX2SB4**	361	**A804_1340 P80 BE80B4**	**A804_1340 P80 BX80B4**	362
1.1	5892	2.4	1324	75000	**A904_1324 S2 ME2SB4**	**A904_1324 S2 MX2SB4**	364	**A904_1324 P80 BE80B4**	**A904_1324 P80 BX80B4**	365
1.2	5528	0.9	1242	50000	**A704_1242 S2 ME2SB4**	**A704_1242 S2 MX2SB4**	358	**A704_1242 P80 BE80B4**	**A704_1242 P80 BX80B4**	359
1.2	5504	1.5	1237	65000	**A804_1237 S2 ME2SB4**	**A804_1237 S2 MX2SB4**	361	**A804_1237 P80 BE80B4**	**A804_1237 P80 BX80B4**	362
1.2	5439	2.6	1222	75000	**A904_1222 S2 ME2SB4**	**A904_1222 S2 MX2SB4**	364	**A904_1222 P80 BE80B4**	**A904_1222 P80 BX80B4**	365
1.2	5169	1.0	1161	50000	**A704_1161 S2 ME2SB4**	**A704_1161 S2 MX2SB4**	358	**A704_1161 P80 BE80B4**	**A704_1161 P80 BX80B4**	359
1.3	4942	2.8	1111	75000	**A904_1111 S2 ME2SB4**	**A904_1111 S2 MX2SB4**	364	**A904_1111 P80 BE80B4**	**A904_1111 P80 BX80B4**	365
1.3	4828	1.7	1085	65000	**A804_1085 S2 ME2SB4**	**A804_1085 S2 MX2SB4**	361	**A804_1085 P80 BE80B4**	**A804_1085 P80 BX80B4**	362
1.3	4771	1.0	1072	50000	**A704_1072 S2 ME2SB4**	**A704_1072 S2 MX2SB4**	358	**A704_1072 P80 BE80B4**	**A704_1072 P80 BX80B4**	359
1.4	4562	3.1	1025	75000	**A904_1025 S2 ME2SB4**	**A904_1025 S2 MX2SB4**	364	**A904_1025 P80 BE80B4**	**A904_1025 P80 BX80B4**	365
1.4	4456	1.8	1001	65000	**A804_1001 S2 ME2SB4**	**A804_1001 S2 MX2SB4**	361	**A804_1001 P80 BE80B4**	**A804_1001 P80 BX80B4**	362
1.5	4170	3.4	937.2	75000	**A904_937.2 S2 ME2SB4**	**A904_937.2 S2 MX2SB4**	364	**A904_937.2 P80 BE80B4**	**A904_937.2 P80 BX80B4**	365
1.5	4123	1.2	926.5	50000	**A704_926.5 S2 ME2SB4**	**A704_926.5 S2 MX2SB4**	358	**A704_926.5 P80 BE80B4**	**A704_926.5 P80 BX80B4**	359
1.6	3999	2.0	898.7	65000	**A804_898.7 S2 ME2SB4**	**A804_898.7 S2 MX2SB4**	361	**A804_898.7 P80 BE80B4**	**A804_898.7 P80 BX80B4**	362
1.7	3806	1.3	855.3	50000	**A704_855.3 S2 ME2SB4**	**A704_855.3 S2 MX2SB4**	358	**A704_855.3 P80 BE80B4**	**A704_855.3 P80 BX80B4**	359
1.7	3691	2.2	829.5	65000	**A804_829.5 S2 ME2SB4**	**A804_829.5 S2 MX2SB4**	361	**A804_829.5 P80 BE80B4**	**A804_829.5 P80 BX80B4**	362
1.9	3399	1.5	763.9	50000	**A704_763.9 S2 ME2SB4**	**A704_763.9 S2 MX2SB4**	358	**A704_763.9 P80 BE80B4**	**A704_763.9 P80 BX80B4**	359
1.9	3391	2.4	762.1	65000	**A804_762.1 S2 ME2SB4**	**A804_762.1 S2 MX2SB4**	361	**A804_762.1 P80 BE80B4**	**A804_762.1 P80 BX80B4**	362
2.0	3138	1.6	705.1	50000	**A704_705.1 S2 ME2SB4**	**A704_705.1 S2 MX2SB4**	358	**A704_705.1 P80 BE80B4**	**A704_705.1 P80 BX80B4**	359
2.0	3130	2.6	703.5	65000	**A804_703.5 S2 ME2SB4**	**A804_703.5 S2 MX2SB4**	361	**A804_703.5 P80 BE80B4**	**A804_703.5 P80 BX80B4**	362
2.1	3103	0.9	697.3	30000	**A604_697.3 S2 ME2SB4**	**A604_697.3 S2 MX2SB4**	354	**A604_697.3 P80 BE80B4**	**A604_697.3 P80 BX80B4**	355
2.2	2869	1.7	644.6	50000	**A704_644.6 S2 ME2SB4**	**A704_644.6 S2 MX2SB4**	358	**A704_644.6 P80 BE80B4**	**A704_644.6 P80 BX80B4**	359
2.3	2824	1.0	634.6	30000	**A604_634.6 S2 ME2SB4**	**A604_634.6 S2 MX2SB4**	354	**A604_634.6 P80 BE80B4**	**A604_634.6 P80 BX80B4**	355
2.4	2702	3.0	607.2	65000	**A804_607.2 S2 ME2SB4**	**A804_607.2 S2 MX2SB4**	361	**A804_607.2 P80 BE80B4**	**A804_607.2 P80 BX80B4**	362
2.4	2648	1.9	595.0	50000	**A704_595.0 S2 ME2SB4**	**A704_595.0 S2 MX2SB4**	358	**A704_595.0 P80 BE80B4**	**A704_595.0 P80 BX80B4**	359
2.4	2607	1.1	585.8	30000	**A604_585.8 S2 ME2SB4**	**A604_585.8 S2 MX2SB4**	354	**A604_585.8 P80 BE80B4**	**A604_585.8 P80 BX80B4**	355
2.6	2494	3.2	560.5	65000	**A804_560.5 S2 ME2SB4**	**A804_560.5 S2 MX2SB4**	361	**A804_560.5 P80 BE80B4**	**A804_560.5 P80 BX80B4**	362
2.6	2412	1.2	542.0	30000	**A604_542.0 S2 ME2SB4**	**A604_542.0 S2 MX2SB4**	354	**A604_542.0 P80 BE80B4**	**A604_542.0 P80 BX80B4**	355
2.8	2294	2.2	515.4	50000	**A704_515.4 S2 ME2SB4**	**A704_515.4 S2 MX2SB4**	358	**A704_515.4 P80 BE80B4**	**A704_515.4 P80 BX80B4**	359
2.9	2226	1.3	500.3	30000	**A604_500.3 S2 ME2SB4**	**A604_500.3 S2 MX2SB4**	354	**A604_500.3 P80 BE80B4**	**A604_500.3 P80 BX80B4**	355
3.0	2117	2.4	475.8	50000	**A704_475.8 S2 ME2SB4**	**A704_475.8 S2 MX2SB4**	358	**A704_475.8 P80 BE80B4**	**A704_475.8 P80 BX80B4**	359
3.3	1951	1.4	438.4	30000	**A604_438.4 S2 ME2SB4**	**A604_438.4 S2 MX2SB4**	354	**A604_438.4 P80 BE80B4**	**A604_438.4 P80 BX80B4**	355
3.5	1842	1.1	414.0	30000	**A554_414.0 S2 ME2SB4**	**A554_414.0 S2 MX2SB4**	350	**A554_414.0 P80 BE80B4**	**A554_414.0 P80 BX80B4**	351
3.5	1801	1.6	404.7	30000	**A604_404.7 S2 ME2SB4**	**A604_404.7 S2 MX2SB4**	354	**A604_404.7 P80 BE80B4**	**A604_404.7 P80 BX80B4**	355
3.6	1781	2.8	400.2	50000	**A704_400.2 S2 ME2SB4**	**A704_400.2 S2 MX2SB4**	358	**A704_400.2 P80 BE80B4**	**A704_400.2 P80 BX80B4**	359
3.9	1644	3.0	369.4	50000	**A704_369.4 S2 ME2SB4**	**A704_369.4 S2 MX2SB4**	358	**A704_369.4 P80 BE80B4**	**A704_369.4 P80 BX80B4**	359
3.9	1627	0.9	365.6	20000	**A504_365.6 S2 ME2SB4**	**A504_365.6 S2 MX2SB4**	346	**A504_365.6 P80 BE80B4**	**A504_365.6 P80 BX80B4**	347
4.1	1563	1.8	351.2	30000	**A604_351.2 S2 ME2SB4**	**A604_351.2 S2 MX2SB4**	354	**A604_351.2 P80 BE80B4**	**A604_351.2 P80 BX80B4**	355
4.3	1480	1.0	332.6	20000	**A504_332.6 S2 ME2SB4**	**A504_332.6 S2 MX2SB4**	346	**A504_332.6 P80 BE80B4**	**A504_332.6 P80 BX80B4**	347
4.4	1445	1.4	324.7	30000	**A554_324.7 S2 ME2SB4**	**A554_324.7 S2 MX2SB4**	350	**A554_324.7 P80 BE80B4**	**A554_324.7 P80 BX80B4**	351
4.4	1443	1.9	324.2	30000	**A604_324.2 S2 ME2SB4**	**A604_324.2 S2 MX2SB4**	354	**A604_324.2 P80 BE80B4**	**A604_324.2 P80 BX80B4**	355
4.5	1408	3.6	316.4	50000	**A704_316.4 S2 ME2SB4**	**A704_316.4 S2 MX2SB4**	358	**A704_316.4 P80 BE80B4**	**A704_316.4 P80 BX80B4**	359
5.0	1276	1.2	286.8	20000	**A504_286.8 S2 ME2SB4**	**A504_286.8 S2 MX2SB4**	346	**A504_286.8 P80 BE80B4**	**A504_286.8 P80 BX80B4**	347
5.0	1274	2.2	286.3	30000	**A604_286.3 S2 ME2SB4**	**A604_286.3 S2 MX2SB4**	354	**A604_286.3 P80 BE80B4**	**A604_286.3 P80 BX80B4**	355
5.4	1176	2.4	264.3	30000	**A604_264.3 S2 ME2SB4**	**A604_264.3 S2 MX2SB4**	354	**A604_264.3 P80 BE80B4**	**A604_264.3 P80 BX80B4**	355
5.4	1169	1.7	262.6	30000	**A554_262.6 S2 ME2SB4**	**A554_262.6 S2 MX2SB4**	350	**A554_262.6 P80 BE80B4**	**A554_262.6 P80 BX80B4**	351
5.5	1161	1.3	260.9	20000	**A504_260.9 S2 ME2SB4**	**A504_260.9 S2 MX2SB4**	346	**A504_260.9 P80 BE80B4**	**A504_260.9 P80 BX80B4**	347
6.2	1032	1.5	232.0	20000	**A504_232.0 S2 ME2SB4**	**A504_232.0 S2 MX2SB4**	346	**A504_232.0 P80 BE80B4**	**A504_232.0 P80 BX80B4**	347
6.3	1006	2.8	226.1	30000	**A604_226.1 S2 ME2SB4**	**A604_226.1 S2 MX2SB4**	354	**A604_226.1 P80 BE80B4**	**A604_226.1 P80 BX80B4**	355
6.8	939	1.6	211.0	20000	**A504_211.0 S2 ME2SB4**	**A504_211.0 S2 MX2SB4**	346	**A504_211.0 P80 BE80B4**	**A504_211.0 P80 BX80B4**	347
6.9	929	3.0	208.7	30000	**A604_208.7 S2 ME2SB4**	**A604_208.7 S2 MX2SB4**	354	**A604_208.7 P80 BE80B4**	**A604_208.7 P80 BX80B4**	355
6.9	926	2.1	208.1	30000	**A554_208.1 S2 ME2SB4**	**A554_208.1 S2 MX2SB4**	350	**A554_208.1 P80 BE80B4**	**A554_208.1 P80 BX80B4**	351
7.2	899	0.9	197.5	15000	**A413_197.5 S2 ME2SB4**	**A413_197.5 S2 MX2SB4**	342	**A413_197.5 P80 BE80B4**	**A413_197.5 P80 BX80B4**	343
7.4	884	2.3	194.2	30000	**A553_194.2 S2 ME2SB4**	**A553_194.2 S2 MX2SB4**	350	**A553_194.2 P80 BE80B4**	**A553_194.2 P80 BX80B4**	351
7.5	867	1.7	190.6	20000	**A503_190.6 S2 ME2SB4**	**A503_190.6 S2 MX2SB4**	346	**A503_190.6 P80 BE80B4**	**A503_190.6 P80 BX80B4**	347
7.7	845	3.3	185.8	30000	**A603_185.8 S2 ME2SB4**	**A603_185.8 S2 MX2SB4**	354	**A603_185.8 P80 BE80B4**	**A603_185.8 P80 BX80B4**	355
7.8	839	1.0	184.4	15000	**A413_184.4 S2 ME2SB4**	**A413_184.4 S2 MX2SB4**	342	**A413_184.4 P80 BE80B4**	**A413_184.4 P80 BX80B4**	343
8.2	796	2.5	175.0	30000	**A553_175.0 S2 ME2SB4**	**A553_175.0 S2 MX2SB4**	350	**A553_175.0 P80 BE80B4**	**A553_175.0 P80 BX80B4**	351
8.2	789	1.9	173.4	20000	**A503_173.4 S2 ME2SB4**	**A503_173.4 S2 MX2SB4**	346	**A503_173.4 P80 BE80B4**	**A503_173.4 P80 BX80B4**	347
8.3	780	3.6	171.5	30000	**A603_171.5 S2 ME2SB4**	**A603_171.5 S2 MX2SB4**	354	**A603_171.5 P80 BE80B4**	**A603_171.5 P80 BX80B4**	355
8.9	730	2.7	160.4	30000	**A553_160.4 S2 ME2SB4**	**A553_160.4 S2 MX2SB4**	350	**A553_160.4 P80 BE80B4**	**A553_160.4 P80 BX80B4**	351

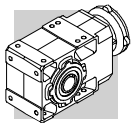

0.75 kW

n_2	M_2	S	i	R_{n2}	IE2	IE3		IEC IE2	IEC IE3	
min-1	Nm			N						
9.3	703	2.1	154.6	20000	**A503_154.6 S2 ME2SB4**	**A503_154.6 S2 MX2SB4**	346	**A503_154.6 P80 BE80B4**	**A503_154.6 P80 BX80B4**	347
9.7	668	1.3	146.9	15000	**A413_146.9 S2 ME2SB4**	**A413_146.9 S2 MX2SB4**	342	**A413_146.9 P80 BE80B4**	**A413_146.9 P80 BX80B4**	343
9.7	668	3.0	146.8	30000	**A553_146.8 S2 ME2SB4**	**A553_146.8 S2 MX2SB4**	350	**A553_146.8 P80 BE80B4**	**A553_146.8 P80 BX80B4**	351
10.2	640	2.3	140.6	20000	**A503_140.6 S2 ME2SB4**	**A503_140.6 S2 MX2SB4**	346	**A503_140.6 P80 BE80B4**	**A503_140.6 P80 BX80B4**	347
10.5	620	0.9	136.3	12000	**A353_136.3 S2 ME2SB4**	**A353_136.3 S2 MX2SB4**	338	**A353_136.3 P80 BE80B4**	**A353_136.3 P80 BX80B4**	339
10.8	604	3.3	132.7	30000	**A553_132.7 S2 ME2SB4**	**A553_132.7 S2 MX2SB4**	350	**A553_132.7 P80 BE80B4**	**A553_132.7 P80 BX80B4**	351
11.0	590	2.5	129.7	20000	**A503_129.7 S2 ME2SB4**	**A503_129.7 S2 MX2SB4**	346	**A503_129.7 P80 BE80B4**	**A503_129.7 P80 BX80B4**	347
11.5	564	3.5	123.9	30000	**A553_123.9 S2 ME2SB4**	**A553_123.9 S2 MX2SB4**	350	**A553_123.9 P80 BE80B4**	**A553_123.9 P80 BX80B4**	351
12.1	537	2.8	118.0	20000	**A503_118.0 S2 ME2SB4**	**A503_118.0 S2 MX2SB4**	346	**A503_118.0 P80 BE80B4**	**A503_118.0 P80 BX80B4**	347
12.2	532	1.1	116.9	12000	**A353_116.9 S2 ME2SB4**	**A353_116.9 S2 MX2SB4**	338	**A353_116.9 P80 BE80B4**	**A353_116.9 P80 BX80B4**	339
12.3	527	1.6	115.9	15000	**A413_115.9 S2 ME2SB4**	**A413_115.9 S2 MX2SB4**	342	**A413_115.9 P80 BE80B4**	**A413_115.9 P80 BX80B4**	343
13.1	498	3.0	109.4	20000	**A503_109.4 S2 ME2SB4**	**A503_109.4 S2 MX2SB4**	346	**A503_109.4 P80 BE80B4**	**A503_109.4 P80 BX80B4**	347
13.5	480	1.1	105.5	12000	**A353_105.5 S2 ME2SB4**	**A353_105.5 S2 MX2SB4**	338	**A353_105.5 P80 BE80B4**	**A353_105.5 P80 BX80B4**	339
14.4	453	3.3	99.5	20000	**A503_99.5 S2 ME2SB4**	**A503_99.5 S2 MX2SB4**	346	**A503_99.5 P80 BE80B4**	**A503_99.5 P80 BX80B4**	347
15.0	450	1.2	95.6	12000	**A352_95.6 S2 ME2SB4**	**A352_95.6 S2 MX2SB4**	338	**A352_95.6 P80 BE80B4**	**A352_95.6 P80 BX80B4**	339
15.4	422	1.9	92.8	15000	**A413_92.8 S2 ME2SB4**	**A413_92.8 S2 MX2SB4**	342	**A413_92.8 P80 BE80B4**	**A413_92.8 P80 BX80B4**	343
17.3	388	1.5	82.5	12000	**A352_82.5 S2 ME2SB4**	**A352_82.5 S2 MX2SB4**	338	**A352_82.5 P80 BE80B4**	**A352_82.5 P80 BX80B4**	339
18.0	372	2.3	79.2	15000	**A412_79.2 S2 ME2SB4**	**A412_79.2 S2 MX2SB4**	342	**A412_79.2 P80 BE80B4**	**A412_79.2 P80 BX80B4**	343
18.7	360	1.0	76.5	8580	**A302_76.5 S2 ME2SB4**	**A302_76.5 S2 MX2SB4**	334	**A302_76.5 P80 BE80B4**	**A302_76.5 P80 BX80B4**	335
19.3	349	1.7	74.3	12000	**A352_74.3 S2 ME2SB4**	**A352_74.3 S2 MX2SB4**	338	**A352_74.3 P80 BE80B4**	**A352_74.3 P80 BX80B4**	339
20.1	335	2.5	71.3	15000	**A412_71.3 S2 ME2SB4**	**A412_71.3 S2 MX2SB4**	342	**A412_71.3 P80 BE80B4**	**A412_71.3 P80 BX80B4**	343
21.7	310	1.3	66.0	8360	**A302_66.0 S2 ME2SB4**	**A302_66.0 S2 MX2SB4**	334	**A302_66.0 P80 BE80B4**	**A302_66.0 P80 BX80B4**	335
21.7	309	1.9	65.8	12000	**A352_65.8 S2 ME2SB4**	**A352_65.8 S2 MX2SB4**	338	**A352_65.8 P80 BE80B4**	**A352_65.8 P80 BX80B4**	339
22.3	302	2.8	64.2	15000	**A412_64.2 S2 ME2SB4**	**A412_64.2 S2 MX2SB4**	342	**A412_64.2 P80 BE80B4**	**A412_64.2 P80 BX80B4**	343
23.7	284	2.1	60.4	12000	**A352_60.4 S2 ME2SB4**	**A352_60.4 S2 MX2SB4**	338	**A352_60.4 P80 BE80B4**	**A352_60.4 P80 BX80B4**	339
24.1	279	1.4	59.4	8190	**A302_59.4 S2 ME2SB4**	**A302_59.4 S2 MX2SB4**	334	**A302_59.4 P80 BE80B4**	**A302_59.4 P80 BX80B4**	335
24.3	276	3.1	58.8	15000	**A412_58.8 S2 ME2SB4**	**A412_58.8 S2 MX2SB4**	342	**A412_58.8 P80 BE80B4**	**A412_58.8 P80 BX80B4**	343
26.3	255	2.4	54.3	12000	**A352_54.3 S2 ME2SB4**	**A352_54.3 S2 MX2SB4**	338	**A352_54.3 P80 BE80B4**	**A352_54.3 P80 BX80B4**	339
26.7	252	1.0	53.7	5210	**A202_53.7 S2 ME2SB4**	**A202_53.7 S2 MX2SB4**	330	**A202_53.7 P80 BE80B4**	**A202_53.7 P80 BX80B4**	331
26.9	250	3.4	53.1	15000	**A412_53.1 S2 ME2SB4**	**A412_53.1 S2 MX2SB4**	342	**A412_53.1 P80 BE80B4**	**A412_53.1 P80 BX80B4**	343
27.1	248	1.7	52.7	7990	**A302_52.7 S2 ME2SB4**	**A302_52.7 S2 MX2SB4**	334	**A302_52.7 P80 BE80B4**	**A302_52.7 P80 BX80B4**	335
29.1	231	2.6	49.1	12000	**A352_49.1 S2 ME2SB4**	**A352_49.1 S2 MX2SB4**	338	**A352_49.1 P80 BE80B4**	**A352_49.1 P80 BX80B4**	339
29.6	227	1.1	48.3	5140	**A202_48.3 S2 ME2SB4**	**A202_48.3 S2 MX2SB4**	330	**A202_48.3 P80 BE80B4**	**A202_48.3 P80 BX80B4**	331
29.6	227	1.8	48.3	7840	**A302_48.3 S2 ME2SB4**	**A302_48.3 S2 MX2SB4**	334	**A302_48.3 P80 BE80B4**	**A302_48.3 P80 BX80B4**	335
31	215	2.8	45.8	12000	**A352_45.8 S2 ME2SB4**	**A352_45.8 S2 MX2SB4**	338	**A352_45.8 P80 BE80B4**	**A352_45.8 P80 BX80B4**	339
33	204	2.0	43.4	7660	**A302_43.4 S2 ME2SB4**	**A302_43.4 S2 MX2SB4**	334	**A302_43.4 P80 BE80B4**	**A302_43.4 P80 BX80B4**	335
33	203	1.2	43.2	5060	**A202_43.2 S2 ME2SB4**	**A202_43.2 S2 MX2SB4**	330	**A202_43.2 P80 BE80B4**	**A202_43.2 P80 BX80B4**	331
34	196	3.1	41.8	11900	**A352_41.8 S2 ME2SB4**	**A352_41.8 S2 MX2SB4**	338	**A352_41.8 P80 BE80B4**	**A352_41.8 P80 BX80B4**	339
36	186	1.3	39.6	4990	**A202_39.6 S2 ME2SB4**	**A202_39.6 S2 MX2SB4**	330	**A202_39.6 P80 BE80B4**	**A202_39.6 P80 BX80B4**	331
36	185	2.2	39.3	7480	**A302_39.3 S2 ME2SB4**	**A302_39.3 S2 MX2SB4**	334	**A302_39.3 P80 BE80B4**	**A302_39.3 P80 BX80B4**	335
39	172	2.4	36.6	7360	**A302_36.6 S2 ME2SB4**	**A302_36.6 S2 MX2SB4**	334	**A302_36.6 P80 BE80B4**	**A302_36.6 P80 BX80B4**	335
39	172	3.5	36.6	11500	**A352_36.6 S2 ME2SB4**	**A352_36.6 S2 MX2SB4**	338	**A352_36.6 P80 BE80B4**	**A352_36.6 P80 BX80B4**	339
40	167	1.5	35.4	4890	**A202_35.4 S2 ME2SB4**	**A202_35.4 S2 MX2SB4**	330	**A202_35.4 P80 BE80B4**	**A202_35.4 P80 BX80B4**	331
41	165	0.9	35.1	4320	**A102_35.1 S2 ME2SB4**	**A102_35.1 S2 MX2SB4**	326	**A102_35.1 P80 BE80B4**	**A102_35.1 P80 BX80B4**	327
43	157	2.6	33.4	7200	**A302_33.4 S2 ME2SB4**	**A302_33.4 S2 MX2SB4**	334	**A302_33.4 P80 BE80B4**	**A302_33.4 P80 BX80B4**	335
44	151	1.0	32.2	5080	**A102_32.2 S2 ME2SB4**	**A102_32.2 S2 MX2SB4**	326	**A102_32.2 P80 BE80B4**	**A102_32.2 P80 BX80B4**	327
46	147	1.7	31.3	4780	**A202_31.3 S2 ME2SB4**	**A202_31.3 S2 MX2SB4**	330	**A202_31.3 P80 BE80B4**	**A202_31.3 P80 BX80B4**	331
49	138	3.0	29.3	6960	**A302_29.3 S2 ME2SB4**	**A302_29.3 S2 MX2SB4**	334	**A302_29.3 P80 BE80B4**	**A302_29.3 P80 BX80B4**	335
49	137	1.8	29.2	4710	**A202_29.2 S2 ME2SB4**	**A202_29.2 S2 MX2SB4**	330	**A202_29.2 P80 BE80B4**	**A202_29.2 P80 BX80B4**	331
50	134	1.1	28.6	4200	**A102_28.6 S2 ME2SB4**	**A102_28.6 S2 MX2SB4**	326	**A102_28.6 P80 BE80B4**	**A102_28.6 P80 BX80B4**	327
54	125	3.3	26.5	6790	**A302_26.5 S2 ME2SB4**	**A302_26.5 S2 MX2SB4**	334	**A302_26.5 P80 BE80B4**	**A302_26.5 P80 BX80B4**	335
54	124	2.0	26.5	4620	**A202_26.5 S2 ME2SB4**	**A202_26.5 S2 MX2SB4**	330	**A202_26.5 P80 BE80B4**	**A202_26.5 P80 BX80B4**	331
56	120	1.3	25.5	4900	**A102_25.5 S2 ME2SB4**	**A102_25.5 S2 MX2SB4**	326	**A102_25.5 P80 BE80B4**	**A102_25.5 P80 BX80B4**	327
60	112	0.9	23.8	2200	**A052_23.8 S2 ME2SB4**	**A052_23.8 S2 MX2SB4**	323	**A052_23.8 P80 BE80B4**	**A052_23.8 P80 BX80B4**	323
60	112	1.3	23.8	4070	**A102_23.8 S2 ME2SB4**	**A102_23.8 S2 MX2SB4**	326	**A102_23.8 P80 BE80B4**	**A102_23.8 P80 BX80B4**	327
62	109	2.3	23.1	4480	**A202_23.1 S2 ME2SB4**	**A202_23.1 S2 MX2SB4**	330	**A202_23.1 P80 BE80B4**	**A202_23.1 P80 BX80B4**	331
67	100	1.0	21.4	2210	**A052_21.4 S2 ME2SB4**	**A052_21.4 S2 MX2SB4**	323	**A052_21.4 P80 BE80B4**	**A052_21.4 P80 BX80B4**	323
67	100	1.5	21.4	4740	**A102_21.4 S2 ME2SB4**	**A102_21.4 S2 MX2SB4**	326	**A102_21.4 P80 BE80B4**	**A102_21.4 P80 BX80B4**	327
67	100	2.5	21.2	4390	**A202_21.2 S2 ME2SB4**	**A202_21.2 S2 MX2SB4**	330	**A202_21.2 P80 BE80B4**	**A202_21.2 P80 BX80B4**	331
77	87	1.1	18.6	2190	**A052_18.6 S2 ME2SB4**	**A052_18.6 S2 MX2SB4**	323	**A052_18.6 P80 BE80B4**	**A052_18.6 P80 BX80B4**	323
77	87	1.7	18.6	3880	**A102_18.6 S2 ME2SB4**	**A102_18.6 S2 MX2SB4**	326	**A102_18.6 P80 BE80B4**	**A102_18.6 P80 BX80B4**	327
79	85	2.9	18.1	4230	**A202_18.1 S2 ME2SB4**	**A202_18.1 S2 MX2SB4**	330	**A202_18.1 P80 BE80B4**	**A202_18.1 P80 BX80B4**	331
87	77	1.3	16.4	2160	**A052_16.4 S2 ME2SB4**	**A052_16.4 S2 MX2SB4**	323	**A052_16.4 P80 BE80B4**	**A052_16.4 P80 BX80B4**	323
87	77	1.9	16.4	4490	**A102_16.4 S2 ME2SB4**	**A102_16.4 S2 MX2SB4**	326	**A102_16.4 P80 BE80B4**	**A102_16.4 P80 BX80B4**	327
88	76	3.3	16.2	4110	**A202_16.2 S2 ME2SB4**	**A202_16.2 S2 MX2SB4**	330	**A202_16.2 P80 BE80B4**	**A202_16.2 P80 BX80B4**	331

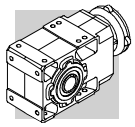

0.75 kW

n_2 min-1	M_2 Nm	S	i	R_{n2} N	IE2	IE3		IEC IE2	IEC IE3	
103	65	1.5	13.9	2110	**A052_13.9 S2 ME2SB4**	**A052_13.9 S2 MX2SB4**	323	**A052_13.9 P80 BE80B4**	**A052_13.9 P80 BX80B4**	323
103	65	2.3	13.9	3640	**A102_13.9 S2 ME2SB4**	**A102_13.9 S2 MX2SB4**	326	**A102_13.9 P80 BE80B4**	**A102_13.9 P80 BX80B4**	327
116	58	1.7	12.3	2080	**A052_12.3 S2 ME2SB4**	**A052_12.3 S2 MX2SB4**	323	**A052_12.3 P80 BE80B4**	**A052_12.3 P80 BX80B4**	323
116	58	2.4	12.3	3530	**A102_12.3 S2 ME2SB4**	**A102_12.3 S2 MX2SB4**	326	**A102_12.3 P80 BE80B4**	**A102_12.3 P80 BX80B4**	327
135	50	2.0	10.6	2010	**A052_10.6 S2 ME2SB4**	**A052_10.6 S2 MX2SB4**	323	**A052_10.6 P80 BE80B4**	**A052_10.6 P80 BX80B4**	323
135	50	3.0	10.6	3400	**A102_10.6 S2 ME2SB4**	**A102_10.6 S2 MX2SB4**	326	**A102_10.6 P80 BE80B4**	**A102_10.6 P80 BX80B4**	327
149	45	2.2	9.6	1990	**A052_9.6 S2 ME2SB4**	**A052_9.6 S2 MX2SB4**	323	**A052_9.6 P80 BE80B4**	**A052_9.6 P80 BX80B4**	323
149	45	3.1	9.6	3320	**A102_9.6 S2 ME2SB4**	**A102_9.6 S2 MX2SB4**	326	**A102_9.6 P80 BE80B4**	**A102_9.6 P80 BX80B4**	327
168	40	2.5	8.5	1940	**A052_8.5 S2 ME2SB4**	**A052_8.5 S2 MX2SB4**	323	**A052_8.5 P80 BE80B4**	**A052_8.5 P80 BX80B4**	323
168	40	3.5	8.5	3820	**A102_8.5 S2 ME2SB4**	**A102_8.5 S2 MX2SB4**	326	**A102_8.5 P80 BE80B4**	**A102_8.5 P80 BX80B4**	327
198	34	3.0	7.2	1870	**A052_7.2 S2 ME2SB4**	**A052_7.2 S2 MX2SB4**	323	**A052_7.2 P80 BE80B4**	**A052_7.2 P80 BX80B4**	323
226	30	3.4	6.3	1810	**A052_6.3 S2 ME2SB4**	**A052_6.3 S2 MX2SB4**	323	**A052_6.3 P80 BE80B4**	**A052_6.3 P80 BX80B4**	323
262	26	3.7	5.5	1750	**A052_5.5 S2 ME2SB4**	**A052_5.5 S2 MX2SB4**	323	**A052_5.5 P80 BE80B4**	**A052_5.5 P80 BX80B4**	323
270	25	3.2	10.6	1720	**A052_10.6 S2 ME2SA2**		323	**A052_10.6 P80 BE80A2**		323
296	23	4.2	9.6	1690	**A052_9.6 S2 ME2SA2**		323	**A052_9.6 P80 BE80A2**		323
335	20	4.5	8.5	1640	**A052_8.5 S2 ME2SA2**		323	**A052_8.5 P80 BE80A2**		323
395	17.0	5.0	7.2	1570	**A052_7.2 S2 ME2SA2**		323	**A052_7.2 P80 BE80A2**		323
450	15.0	5.3	6.3	1510	**A052_6.3 S2 ME2SA2**		323	**A052_6.3 P80 BE80A2**		323
521	12.9	5.8	5.5	1450	**A052_5.5 S2 ME2SA2**		323	**A052_5.5 P80 BE80A2**		323

0.75 kW

n_2 min-1	M_2 Nm	S	i	R_{n2} N	IE3		IEC IE3	
0.88	7264	1.9	1632	75000			**A904_1632 P80 BXN80MB4**	365
0.92	6932	1.2	1558	65000			**A804_1558 P80 BXN80MB4**	362
0.95	6705	2.1	1507	75000			**A904_1507 P80 BXN80MB4**	365
0.99	6398	1.3	1438	65000			**A804_1438 P80 BXN80MB4**	362
1.1	5963	1.3	1340	65000			**A804_1340 P80 BXN80MB4**	362
1.1	5892	2.4	1324	75000			**A904_1324 P80 BXN80MB4**	365
1.2	5528	0.9	1242	50000			**A704_1242 P80 BXN80MB4**	359
1.2	5504	1.5	1237	65000			**A804_1237 P80 BXN80MB4**	362
1.2	5439	2.6	1222	75000			**A904_1222 P80 BXN80MB4**	365
1.2	5169	1.0	1161	50000			**A704_1161 P80 BXN80MB4**	359
1.3	4942	2.8	1111	75000			**A904_1111 P80 BXN80MB4**	365
1.3	4828	1.7	1085	65000			**A804_1085 P80 BXN80MB4**	362
1.3	4771	1.0	1072	50000			**A704_1072 P80 BXN80MB4**	359
1.4	4562	3.1	1025	75000			**A904_1025 P80 BXN80MB4**	365
1.4	4456	1.8	1001	65000			**A804_1001 P80 BXN80MB4**	362
1.5	4170	3.4	937.2	75000			**A904_937.2 P80 BXN80MB4**	365
1.5	4123	1.2	926.5	50000			**A704_926.5 P80 BXN80MB4**	359
1.6	3999	2.0	898.7	65000			**A804_898.7 P80 BXN80MB4**	362
1.7	3806	1.3	855.3	50000			**A704_855.3 P80 BXN80MB4**	359
1.7	3691	2.2	829.5	65000			**A804_829.5 P80 BXN80MB4**	362
1.9	3399	1.5	763.9	50000			**A704_763.9 P80 BXN80MB4**	359
1.9	3391	2.4	762.1	65000			**A804_762.1 P80 BXN80MB4**	362
2.0	3138	1.6	705.1	50000			**A704_705.1 P80 BXN80MB4**	359
2.0	3130	2.6	703.5	65000			**A804_703.5 P80 BXN80MB4**	362
2.1	3103	0.9	697.3	30000			**A604_697.3 P80 BXN80MB4**	355
2.2	2869	1.7	644.6	50000			**A704_644.6 P80 BXN80MB4**	359
2.3	2824	1.0	634.6	30000			**A604_634.6 P80 BXN80MB4**	355
2.4	2702	3.0	607.2	65000			**A804_607.2 P80 BXN80MB4**	362
2.4	2648	1.9	595.0	50000			**A704_595.0 P80 BXN80MB4**	359
2.4	2607	1.1	585.8	30000			**A604_585.8 P80 BXN80MB4**	355
2.6	2494	3.2	560.5	65000			**A804_560.5 P80 BXN80MB4**	362
2.6	2412	1.2	542.0	30000			**A604_542.0 P80 BXN80MB4**	355
2.8	2294	2.2	515.4	50000			**A704_515.4 P80 BXN80MB4**	359
2.9	2226	1.3	500.3	30000			**A604_500.3 P80 BXN80MB4**	355
3.0	2117	2.4	475.8	50000			**A704_475.8 P80 BXN80MB4**	359
3.3	1951	1.4	438.4	30000			**A604_438.4 P80 BXN80MB4**	355

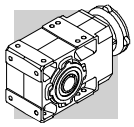

0.75 kW

n_2 min-1	M_2 Nm	S	i	R_{n2} N	IE3		IEC IE3	
3.5	1842	1.1	414.0	30000			**A554_414.0 P80 BXN80MB4**	351
3.5	1801	1.6	404.7	30000			**A604_404.7 P80 BXN80MB4**	355
3.6	1781	2.8	400.2	50000			**A704_400.2 P80 BXN80MB4**	359
3.9	1644	3.0	369.4	50000			**A704_369.4 P80 BXN80MB4**	359
3.9	1627	0.9	365.6	20000			**A504_365.6 P80 BXN80MB4**	347
4.1	1563	1.8	351.2	30000			**A604_351.2 P80 BXN80MB4**	355
4.3	1480	1.0	332.6	20000			**A504_332.6 P80 BXN80MB4**	347
4.4	1445	1.4	324.7	30000			**A554_324.7 P80 BXN80MB4**	351
4.4	1443	1.9	324.2	30000			**A604_324.2 P80 BXN80MB4**	355
4.5	1408	3.6	316.4	50000			**A704_316.4 P80 BXN80MB4**	359
5.0	1276	1.2	286.8	20000			**A504_286.8 P80 BXN80MB4**	347
5.0	1274	2.2	286.3	30000			**A604_286.3 P80 BXN80MB4**	355
5.4	1176	2.4	264.3	30000			**A604_264.3 P80 BXN80MB4**	355
5.4	1169	1.7	262.6	30000			**A554_262.6 P80 BXN80MB4**	351
5.5	1161	1.3	260.9	20000			**A504_260.9 P80 BXN80MB4**	347
6.2	1032	1.5	232.0	20000			**A504_232.0 P80 BXN80MB4**	347
6.3	1006	2.8	226.1	30000			**A604_226.1 P80 BXN80MB4**	355
6.8	939	1.6	211.0	20000			**A504_211.0 P80 BXN80MB4**	347
6.9	929	3.0	208.7	30000			**A604_208.7 P80 BXN80MB4**	355
6.9	926	2.1	208.1	30000			**A554_208.1 P80 BXN80MB4**	351
7.2	899	0.9	197.5	15000	**A413_197.5 SX20 MXN20MB4**	342	**A413_197.5 P80 BXN80MB4**	343
7.4	884	2.3	194.2	30000			**A553_194.2 P80 BXN80MB4**	351
7.5	867	1.7	190.6	20000			**A503_190.6 P80 BXN80MB4**	347
7.7	845	3.3	185.8	30000			**A603_185.8 P80 BXN80MB4**	355
7.8	839	1.0	184.4	15000	**A413_184.4 SX20 MXN20MB4**	342	**A413_184.4 P80 BXN80MB4**	343
8.2	796	2.5	175.0	30000			**A553_175.0 P80 BXN80MB4**	351
8.2	789	1.9	173.4	20000			**A503_173.4 P80 BXN80MB4**	347
8.3	780	3.6	171.5	30000			**A603_171.5 P80 BXN80MB4**	355
8.9	730	2.7	160.4	30000			**A553_160.4 P80 BXN80MB4**	351
9.3	703	2.1	154.6	20000			**A503_154.6 P80 BXN80MB4**	347
9.7	668	1.3	146.9	15000	**A413_146.9 SX20 MXN20MB4**	342	**A413_146.9 P80 BXN80MB4**	343
9.7	668	3.0	146.8	30000			**A553_146.8 P80 BXN80MB4**	351
10.2	640	2.3	140.6	20000			**A503_140.6 P80 BXN80MB4**	347
10.5	620	0.9	136.3	12000	**A353_136.3 SX20 MXN20MB4**	338	**A353_136.3 P80 BXN80MB4**	339
10.8	604	3.3	132.7	30000			**A553_132.7 P80 BXN80MB4**	351
11.0	590	2.5	129.7	20000			**A503_129.7 P80 BXN80MB4**	347
11.5	564	3.5	123.9	30000			**A553_123.9 P80 BXN80MB4**	351
12.1	537	2.8	118.0	20000			**A503_118.0 P80 BXN80MB4**	347
12.2	532	1.1	116.9	12000	**A353_116.9 SX20 MXN20MB4**	338	**A353_116.9 P80 BXN80MB4**	339
12.3	527	1.6	115.9	15000	**A413_115.9 SX20 MXN20MB4**	342	**A413_115.9 P80 BXN80MB4**	343
13.1	498	3.0	109.4	20000			**A503_109.4 P80 BXN80MB4**	347
13.5	480	1.1	105.5	12000	**A353_105.5 SX20 MXN20MB4**	338	**A353_105.5 P80 BXN80MB4**	339
14.4	453	3.3	99.5	20000			**A503_99.5 P80 BXN80MB4**	347
15.0	450	1.2	95.6	12000			**A352_95.6 P80 BXN80MB4**	339
15.4	422	1.9	92.8	15000	**A413_92.8 SX20 MXN20MB4**	342	**A413_92.8 P80 BXN80MB4**	343
17.3	388	1.5	82.5	12000			**A352_82.5 P80 BXN80MB4**	339
18.0	372	2.3	79.2	15000			**A412_79.2 P80 BXN80MB4**	343
18.7	360	1.0	76.5	8580			**A302_76.5 P80 BXN80MB4**	335
19.3	349	1.7	74.3	12000			**A352_74.3 P80 BXN80MB4**	339
20.1	335	2.5	71.3	15000			**A412_71.3 P80 BXN80MB4**	343
21.7	310	1.3	66.0	8360			**A302_66.0 P80 BXN80MB4**	335
21.7	309	1.9	65.8	12000			**A352_65.8 P80 BXN80MB4**	339
22.3	302	2.8	64.2	15000			**A412_64.2 P80 BXN80MB4**	343
23.7	284	2.1	60.4	12000			**A352_60.4 P80 BXN80MB4**	339
24.1	279	1.4	59.4	8190			**A302_59.4 P80 BXN80MB4**	335
24.3	276	3.1	58.8	15000			**A412_58.8 P80 BXN80MB4**	343
26.3	255	2.4	54.3	12000			**A352_54.3 P80 BXN80MB4**	339
26.7	252	1.0	53.7	5210	**A202_53.7 SX20 MXN20MB4**	330	**A202_53.7 P80 BXN80MB4**	331
26.9	250	3.4	53.1	15000			**A412_53.1 P80 BXN80MB4**	343
27.1	248	1.7	52.7	7990			**A302_52.7 P80 BXN80MB4**	335
29.1	231	2.6	49.1	12000			**A352_49.1 P80 BXN80MB4**	339

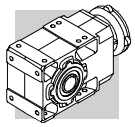

0.75 kW

n_2 min-1	M_2 Nm	S	i	R_{n2} N	IE3		IEC IE3	
29.6	227	1.1	48.3	5140	**A202_48.3 SX20 MXN20MB4**	330	**A202_48.3 P80 BXN80MB4**	331
29.6	227	1.8	48.3	7840			**A302_48.3 P80 BXN80MB4**	335
31	215	2.8	45.8	12000			**A352_45.8 P80 BXN80MB4**	339
33	204	2.0	43.4	7660			**A302_43.4 P80 BXN80MB4**	335
33	203	1.2	43.2	5060	**A202_43.2 SX20 MXN20MB4**	330	**A202_43.2 P80 BXN80MB4**	331
34	196	3.1	41.8	11900			**A352_41.8 P80 BXN80MB4**	339
36	186	1.3	39.6	4990	**A202_39.6 SX20 MXN20MB4**	330	**A202_39.6 P80 BXN80MB4**	331
36	185	2.2	39.3	7480			**A302_39.3 P80 BXN80MB4**	335
39	172	2.4	36.6	7360			**A302_36.6 P80 BXN80MB4**	335
39	172	3.5	36.6	11500			**A352_36.6 P80 BXN80MB4**	339
40	167	1.5	35.4	4890	**A202_35.4 SX20 MXN20MB4**	330	**A202_35.4 P80 BXN80MB4**	331
41	165	0.9	35.1	4320	**A102_35.1 SX20 MXN20MB4**	326	**A102_35.1 P80 BXN80MB4**	327
43	157	2.6	33.4	7200			**A302_33.4 P80 BXN80MB4**	335
44	151	1.0	32.2	5080	**A102_32.2 SX20 MXN20MB4**	326	**A102_32.2 P80 BXN80MB4**	327
46	147	1.7	31.3	4780	**A202_31.3 SX20 MXN20MB4**	330	**A202_31.3 P80 BXN80MB4**	331
49	138	3.0	29.3	6960			**A302_29.3 P80 BXN80MB4**	335
49	137	1.8	29.2	4710	**A202_29.2 SX20 MXN20MB4**	330	**A202_29.2 P80 BXN80MB4**	331
50	134	1.1	28.6	4200	**A102_28.6 SX20 MXN20MB4**	326	**A102_28.6 P80 BXN80MB4**	327
54	125	3.3	26.5	6790			**A302_26.5 P80 BXN80MB4**	335
54	124	2.0	26.5	4620	**A202_26.5 SX20 MXN20MB4**	330	**A202_26.5 P80 BXN80MB4**	331
56	120	1.3	25.5	4900	**A102_25.5 SX20 MXN20MB4**	326	**A102_25.5 P80 BXN80MB4**	327
60	112	0.9	23.8	2200			**A052_23.8 P80 BXN80MB4**	323
60	112	1.3	23.8	4070	**A102_23.8 SX20 MXN20MB4**	326	**A102_23.8 P80 BXN80MB4**	327
62	109	2.3	23.1	4480	**A202_23.1 SX20 MXN20MB4**	330	**A202_23.1 P80 BXN80MB4**	331
67	100	1.0	21.4	2210			**A052_21.4 P80 BXN80MB4**	323
67	100	1.5	21.4	4740	**A102_21.4 SX20 MXN20MB4**	326	**A102_21.4 P80 BXN80MB4**	327
67	100	2.5	21.2	4390	**A202_21.2 SX20 MXN20MB4**	330	**A202_21.2 P80 BXN80MB4**	331
77	87	1.1	18.6	2190			**A052_18.6 P80 BXN80MB4**	323
77	87	1.7	18.6	3880	**A102_18.6 SX20 MXN20MB4**	326	**A102_18.6 P80 BXN80MB4**	327
79	85	2.9	18.1	4230	**A202_18.1 SX20 MXN20MB4**	330	**A202_18.1 P80 BXN80MB4**	331
87	77	1.3	16.4	2160			**A052_16.4 P80 BXN80MB4**	323
87	77	1.9	16.4	4490	**A102_16.4 SX20 MXN20MB4**	326	**A102_16.4 P80 BXN80MB4**	327
88	76	3.3	16.2	4110	**A202_16.2 SX20 MXN20MB4**	330	**A202_16.2 P80 BXN80MB4**	331
103	65	1.5	13.9	2110			**A052_13.9 P80 BXN80MB4**	323
103	65	2.3	13.9	3640	**A102_13.9 SX20 MXN20MB4**	326	**A102_13.9 P80 BXN80MB4**	327
116	58	1.7	12.3	2080			**A052_12.3 P80 BXN80MB4**	323
116	58	2.4	12.3	3530	**A102_12.3 SX20 MXN20MB4**	326	**A102_12.3 P80 BXN80MB4**	327
135	50	2.0	10.6	2010			**A052_10.6 P80 BXN80MB4**	323
135	50	3.0	10.6	3400	**A102_10.6 SX20 MXN20MB4**	326	**A102_10.6 P80 BXN80MB4**	327
149	45	2.2	9.6	1990			**A052_9.6 P80 BXN80MB4**	323
149	45	3.1	9.6	3320	**A102_9.6 SX20 MXN20MB4**	326	**A102_9.6 P80 BXN80MB4**	327
168	40	2.5	8.5	1940			**A052_8.5 P80 BXN80MB4**	323
168	40	3.5	8.5	3820	**A102_8.5 SX20 MXN20MB4**	326	**A102_8.5 P80 BXN80MB4**	327
198	34	3.0	7.2	1870			**A052_7.2 P80 BXN80MB4**	323
226	30	3.4	6.3	1810			**A052_6.3 P80 BXN80MB4**	323
262	26	3.7	5.5	1750			**A052_5.5 P80 BXN80MB4**	323

1.1 kW

n_2 min-1	M_2 Nm	S	i	R_{n2} N	IE2	IE3		IEC IE2	IE3	
0.63	14914	0.9	1507	75000	**A904_1507 S3 ME3LA6**		364	**A904_1507 P100 BE100M6**		365
0.71	13103	1.1	1324	75000	**A904_1324 S3 ME3LA6**		364	**A904_1324 P100 BE100M6**		365
0.77	12094	1.2	1222	75000	**A904_1222 S3 ME3LA6**		364	**A904_1222 P100 BE100M6**		365
0.88	10751	1.3	1632	75000	**A904_1632 S3 ME3SA4**	**A904_1632 S3 MX3SA4**	364	**A904_1632 P90 BE90S4**	**A904_1632 P90 BX90S4**	365
0.95	9924	1.4	1507	75000	**A904_1507 S3 ME3SA4**	**A904_1507 S3 MX3SA4**	364	**A904_1507 P90 BE90S4**	**A904_1507 P90 BX90S4**	365
1.1	8825	0.9	1340	65000	**A804_1340 S3 ME3SA4**	**A804_1340 S3 MX3SA4**	361	**A804_1340 P90 BE90S4**	**A804_1340 P90 BX90S4**	362
1.1	8720	1.6	1324	75000	**A904_1324 S3 ME3SA4**	**A904_1324 S3 MX3SA4**	364	**A904_1324 P90 BE90S4**	**A904_1324 P90 BX90S4**	365

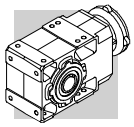

1.1 kW

n_2	M_2	S	i	R_{n2}	IE2	IE3		IEC IE2	IEC IE3	
min-1	Nm			N						
1.2	8146	1.0	1237	65000	**A804_1237 S3 ME3SA4**	**A804_1237 S3 MX3SA4**	361	**A804_1237 P90 BE90S4**	**A804_1237 P90 BX90S4**	362
1.2	8049	1.7	1222	75000	**A904_1222 S3 ME3SA4**	**A904_1222 S3 MX3SA4**	364	**A904_1222 P90 BE90S4**	**A904_1222 P90 BX90S4**	365
1.3	7314	1.9	1111	75000	**A904_1111 S3 ME3SA4**	**A904_1111 S3 MX3SA4**	364	**A904_1111 P90 BE90S4**	**A904_1111 P90 BX90S4**	365
1.3	7145	1.1	1085	65000	**A804_1085 S3 ME3SA4**	**A804_1085 S3 MX3SA4**	361	**A804_1085 P90 BE90S4**	**A804_1085 P90 BX90S4**	362
1.4	6752	2.1	1025	75000	**A904_1025 S3 ME3SA4**	**A904_1025 S3 MX3SA4**	364	**A904_1025 P90 BE90S4**	**A904_1025 P90 BX90S4**	365
1.4	6595	1.2	1001	65000	**A804_1001 S3 ME3SA4**	**A804_1001 S3 MX3SA4**	361	**A804_1001 P90 BE90S4**	**A804_1001 P90 BX90S4**	362
1.5	6172	2.3	937.2	75000	**A904_937.2 S3 ME3SA4**	**A904_937.2 S3 MX3SA4**	364	**A904_937.2 P90 BE90S4**	**A904_937.2 P90 BX90S4**	365
1.6	5919	1.4	898.7	65000	**A804_898.7 S3 ME3SA4**	**A804_898.7 S3 MX3SA4**	361	**A804_898.7 P90 BE90S4**	**A804_898.7 P90 BX90S4**	362
1.7	5697	2.5	865.1	75000	**A904_865.1 S3 ME3SA4**	**A904_865.1 S3 MX3SA4**	364	**A904_865.1 P90 BE90S4**	**A904_865.1 P90 BX90S4**	365
1.7	5633	0.9	855.3	50000	**A704_855.3 S3 ME3SA4**	**A704_855.3 S3 MX3SA4**	358	**A704_855.3 P90 BE90S4**	**A704_855.3 P90 BX90S4**	359
1.7	5463	1.5	829.5	65000	**A804_829.5 S3 ME3SA4**	**A804_829.5 S3 MX3SA4**	361	**A804_829.5 P90 BE90S4**	**A804_829.5 P90 BX90S4**	362
1.9	5051	2.8	766.9	75000	**A904_766.9 S3 ME3SA4**	**A904_766.9 S3 MX3SA4**	364	**A904_766.9 P90 BE90S4**	**A904_766.9 P90 BX90S4**	365
1.9	5031	1.0	763.9	50000	**A704_763.9 S3 ME3SA4**	**A704_763.9 S3 MX3SA4**	358	**A704_763.9 P90 BE90S4**	**A704_763.9 P90 BX90S4**	359
1.9	5019	1.6	762.1	65000	**A804_762.1 S3 ME3SA4**	**A804_762.1 S3 MX3SA4**	361	**A804_762.1 P90 BE90S4**	**A804_762.1 P90 BX90S4**	362
2.0	4662	3.0	707.9	75000	**A904_707.9 S3 ME3SA4**	**A904_707.9 S3 MX3SA4**	364	**A904_707.9 P90 BE90S4**	**A904_707.9 P90 BX90S4**	365
2.0	4644	1.1	705.1	50000	**A704_705.1 S3 ME3SA4**	**A704_705.1 S3 MX3SA4**	358	**A704_705.1 P90 BE90S4**	**A704_705.1 P90 BX90S4**	359
2.0	4633	1.7	703.5	65000	**A804_703.5 S3 ME3SA4**	**A804_703.5 S3 MX3SA4**	361	**A804_703.5 P90 BE90S4**	**A804_703.5 P90 BX90S4**	362
2.2	4245	1.2	644.6	50000	**A704_644.6 S3 ME3SA4**	**A704_644.6 S3 MX3SA4**	358	**A704_644.6 P90 BE90S4**	**A704_644.6 P90 BX90S4**	359
2.4	3999	2.0	607.2	65000	**A804_607.2 S3 ME3SA4**	**A804_607.2 S3 MX3SA4**	361	**A804_607.2 P90 BE90S4**	**A804_607.2 P90 BX90S4**	362
2.4	3962	3.5	601.6	75000	**A904_601.6 S3 ME3SA4**	**A904_601.6 S3 MX3SA4**	364	**A904_601.6 P90 BE90S4**	**A904_601.6 P90 BX90S4**	365
2.4	3919	1.3	595.0	50000	**A704_595.0 S3 ME3SA4**	**A704_595.0 S3 MX3SA4**	358	**A704_595.0 P90 BE90S4**	**A704_595.0 P90 BX90S4**	359
2.6	3691	2.2	560.5	65000	**A804_560.5 S3 ME3SA4**	**A804_560.5 S3 MX3SA4**	361	**A804_560.5 P90 BE90S4**	**A804_560.5 P90 BX90S4**	362
2.8	3394	1.5	515.4	50000	**A704_515.4 S3 ME3SA4**	**A704_515.4 S3 MX3SA4**	358	**A704_515.4 P90 BE90S4**	**A704_515.4 P90 BX90S4**	359
3.0	3154	2.5	478.9	65000	**A804_478.9 S3 ME3SA4**	**A804_478.9 S3 MX3SA4**	361	**A804_478.9 P90 BE90S4**	**A804_478.9 P90 BX90S4**	362
3.0	3133	1.6	475.8	50000	**A704_475.8 S3 ME3SA4**	**A704_475.8 S3 MX3SA4**	358	**A704_475.8 P90 BE90S4**	**A704_475.8 P90 BX90S4**	359
3.2	2912	2.7	442.1	65000	**A804_442.1 S3 ME3SA4**	**A804_442.1 S3 MX3SA4**	361	**A804_442.1 P90 BE90S4**	**A804_442.1 P90 BX90S4**	362
3.3	2887	1.0	438.4	30000	**A604_438.4 S3 ME3SA4**	**A604_438.4 S3 MX3SA4**	354	**A604_438.4 P90 BE90S4**	**A604_438.4 P90 BX90S4**	355
3.5	2665	1.1	404.7	30000	**A604_404.7 S3 ME3SA4**	**A604_404.7 S3 MX3SA4**	354	**A604_404.7 P90 BE90S4**	**A604_404.7 P90 BX90S4**	355
3.6	2635	1.9	400.2	50000	**A704_400.2 S3 ME3SA4**	**A704_400.2 S3 MX3SA4**	358	**A704_400.2 P90 BE90S4**	**A704_400.2 P90 BX90S4**	359
3.7	2526	3.2	383.5	65000	**A804_383.5 S3 ME3SA4**	**A804_383.5 S3 MX3SA4**	361	**A804_383.5 P90 BE90S4**	**A804_383.5 P90 BX90S4**	362
3.9	2433	2.1	369.4	50000	**A704_369.4 S3 ME3SA4**	**A704_369.4 S3 MX3SA4**	358	**A704_369.4 P90 BE90S4**	**A704_369.4 P90 BX90S4**	359
4.0	2331	3.4	354.0	65000	**A804_354.0 S3 ME3SA4**	**A804_354.0 S3 MX3SA4**	361	**A804_354.0 P90 BE90S4**	**A804_354.0 P90 BX90S4**	362
4.1	2313	1.2	351.2	30000	**A604_351.2 S3 ME3SA4**	**A604_351.2 S3 MX3SA4**	354	**A604_351.2 P90 BE90S4**	**A604_351.2 P90 BX90S4**	355
4.4	2139	0.9	324.7	30000	**A554_324.7 S3 ME3SA4**	**A554_324.7 S3 MX3SA4**	350	**A554_324.7 P90 BE90S4**	**A554_324.7 P90 BX90S4**	351
4.4	2135	1.3	324.2	30000	**A604_324.2 S3 ME3SA4**	**A604_324.2 S3 MX3SA4**	354	**A604_324.2 P90 BE90S4**	**A604_324.2 P90 BX90S4**	355
4.5	2083	2.4	316.4	50000	**A704_316.4 S3 ME3SA4**	**A704_316.4 S3 MX3SA4**	358	**A704_316.4 P90 BE90S4**	**A704_316.4 P90 BX90S4**	359
4.9	1923	2.6	292.0	50000	**A704_292.0 S3 ME3SA4**	**A704_292.0 S3 MX3SA4**	358	**A704_292.0 P90 BE90S4**	**A704_292.0 P90 BX90S4**	359
5.0	1886	1.5	286.3	30000	**A604_286.3 S3 ME3SA4**	**A604_286.3 S3 MX3SA4**	354	**A604_286.3 P90 BE90S4**	**A604_286.3 P90 BX90S4**	355
5.4	1741	1.6	264.3	30000	**A604_264.3 S3 ME3SA4**	**A604_264.3 S3 MX3SA4**	354	**A604_264.3 P90 BE90S4**	**A604_264.3 P90 BX90S4**	355
5.4	1730	1.2	262.6	30000	**A554_262.6 S3 ME3SA4**	**A554_262.6 S3 MX3SA4**	350	**A554_262.6 P90 BE90S4**	**A554_262.6 P90 BX90S4**	351
5.5	1718	0.9	260.9	20000	**A504_260.9 S3 ME3SA4**	**A504_260.9 S3 MX3SA4**	346	**A504_260.9 P90 BE90S4**	**A504_260.9 P90 BX90S4**	347
6.0	1571	3.2	238.6	50000	**A704_238.6 S3 ME3SA4**	**A704_238.6 S3 MX3SA4**	358	**A704_238.6 P90 BE90S4**	**A704_238.6 P90 BX90S4**	359
6.2	1528	1.0	232.0	20000	**A504_232.0 S3 ME3SA4**	**A504_232.0 S3 MX3SA4**	346	**A504_232.0 P90 BE90S4**	**A504_232.0 P90 BX90S4**	347
6.3	1489	1.9	226.1	30000	**A604_226.1 S3 ME3SA4**	**A604_226.1 S3 MX3SA4**	354	**A604_226.1 P90 BE90S4**	**A604_226.1 P90 BX90S4**	355
6.5	1451	3.4	220.3	50000	**A704_220.3 S3 ME3SA4**	**A704_220.3 S3 MX3SA4**	358	**A704_220.3 P90 BE90S4**	**A704_220.3 P90 BX90S4**	359
6.8	1390	1.1	211.0	20000	**A504_211.0 S3 ME3SA4**	**A504_211.0 S3 MX3SA4**	346	**A504_211.0 P90 BE90S4**	**A504_211.0 P90 BX90S4**	347
6.9	1375	2.0	208.7	30000	**A604_208.7 S3 ME3SA4**	**A604_208.7 S3 MX3SA4**	354	**A604_208.7 P90 BE90S4**	**A604_208.7 P90 BX90S4**	355
6.9	1370	1.4	208.1	30000	**A554_208.1 S3 ME3SA4**	**A554_208.1 S3 MX3SA4**	350	**A554_208.1 P90 BE90S4**	**A554_208.1 P90 BX90S4**	351
7.4	1308	1.5	194.2	30000	**A553_194.2 S3 ME3SA4**	**A553_194.2 S3 MX3SA4**	350	**A553_194.2 P90 BE90S4**	**A553_194.2 P90 BX90S4**	351
7.5	1283	1.2	190.6	20000	**A503_190.6 S3 ME3SA4**	**A503_190.6 S3 MX3SA4**	346	**A503_190.6 P90 BE90S4**	**A503_190.6 P90 BX90S4**	347
7.7	1251	2.2	185.8	30000	**A603_185.8 S3 ME3SA4**	**A603_185.8 S3 MX3SA4**	354	**A603_185.8 P90 BE90S4**	**A603_185.8 P90 BX90S4**	355
8.2	1179	1.7	175.0	30000	**A553_175.0 S3 ME3SA4**	**A553_175.0 S3 MX3SA4**	350	**A553_175.0 P90 BE90S4**	**A553_175.0 P90 BX90S4**	351
8.2	1167	1.3	173.4	20000	**A503_173.4 S3 ME3SA4**	**A503_173.4 S3 MX3SA4**	346	**A503_173.4 P90 BE90S4**	**A503_173.4 P90 BX90S4**	347
8.3	1155	2.4	171.5	30000	**A603_171.5 S3 ME3SA4**	**A603_171.5 S3 MX3SA4**	354	**A603_171.5 P90 BE90S4**	**A603_171.5 P90 BX90S4**	355
8.9	1080	1.9	160.4	30000	**A553_160.4 S3 ME3SA4**	**A553_160.4 S3 MX3SA4**	350	**A553_160.4 P90 BE90S4**	**A553_160.4 P90 BX90S4**	351
9.2	1051	2.7	156.0	30000	**A603_156.0 S3 ME3SA4**	**A603_156.0 S3 MX3SA4**	354	**A603_156.0 P90 BE90S4**	**A603_156.0 P90 BX90S4**	355
9.3	1041	1.4	154.6	20000	**A503_154.6 S3 ME3SA4**	**A503_154.6 S3 MX3SA4**	346	**A503_154.6 P90 BE90S4**	**A503_154.6 P90 BX90S4**	347
9.7	989	2.0	146.8	30000	**A553_146.8 S3 ME3SA4**	**A553_146.8 S3 MX3SA4**	350	**A553_146.8 P90 BE90S4**	**A553_146.8 P90 BX90S4**	351
9.9	970	2.9	144.0	30000	**A603_144.0 S3 ME3SA4**	**A603_144.0 S3 MX3SA4**	354	**A603_144.0 P90 BE90S4**	**A603_144.0 P90 BX90S4**	355
10.2	947	1.6	140.6	20000	**A503_140.6 S3 ME3SA4**	**A503_140.6 S3 MX3SA4**	346	**A503_140.6 P90 BE90S4**	**A503_140.6 P90 BX90S4**	347
10.7	898	3.1	133.3	30000	**A603_133.3 S3 ME3SA4**	**A603_133.3 S3 MX3SA4**	354	**A603_133.3 P90 BE90S4**	**A603_133.3 P90 BX90S4**	355
10.8	894	2.2	132.7	30000	**A553_132.7 S3 ME3SA4**	**A553_132.7 S3 MX3SA4**	350	**A553_132.7 P90 BE90S4**	**A553_132.7 P90 BX90S4**	351
11.0	873	1.7	129.7	20000	**A503_129.7 S3 ME3SA4**	**A503_129.7 S3 MX3SA4**	346	**A503_129.7 P90 BE90S4**	**A503_129.7 P90 BX90S4**	347
11.5	834	2.4	123.9	30000	**A553_123.9 S3 ME3SA4**	**A553_123.9 S3 MX3SA4**	350	**A553_123.9 P90 BE90S4**	**A553_123.9 P90 BX90S4**	351
11.6	828	3.4	123.0	30000	**A603_123.0 S3 ME3SA4**	**A603_123.0 S3 MX3SA4**	354	**A603_123.0 P90 BE90S4**	**A603_123.0 P90 BX90S4**	355

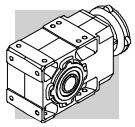

1.1 kW

n_2	M_2	S	i	R_{n2}	IE2	IE3		IEC IE2	IEC IE3	
min-1	Nm			N						
12.1	794	1.9	118.0	20000	**A503_118.0 S3 ME3SA4**	**A503_118.0 S3 MX3SA4**	346	**A503_118.0 P90 BE90S4**	**A503_118.0 P90 BX90S4**	347
12.3	780	1.1	115.9	15000	**A413_115.9 S3 ME3SA4**	**A413_115.9 S3 MX3SA4**	342	**A413_115.9 P90 BE90S4**	**A413_115.9 P90 BX90S4**	343
13.1	737	2.0	109.4	20000	**A503_109.4 S3 ME3SA4**	**A503_109.4 S3 MX3SA4**	346	**A503_109.4 P90 BE90S4**	**A503_109.4 P90 BX90S4**	347
14.1	683	2.9	101.4	30000	**A553_101.4 S3 ME3SA4**	**A553_101.4 S3 MX3SA4**	350	**A553_101.4 P90 BE90S4**	**A553_101.4 P90 BX90S4**	351
14.4	670	2.2	99.5	20000	**A503_99.5 S3 ME3SA4**	**A503_99.5 S3 MX3SA4**	346	**A503_99.5 P90 BE90S4**	**A503_99.5 P90 BX90S4**	347
15.4	625	1.3	92.8	15000	**A413_92.8 S3 ME3SA4**	**A413_92.8 S3 MX3SA4**	342	**A413_92.8 P90 BE90S4**	**A413_92.8 P90 BX90S4**	343
16.0	603	2.5	89.5	20000	**A503_89.5 S3 ME3SA4**	**A503_89.5 S3 MX3SA4**	346	**A503_89.5 P90 BE90S4**	**A503_89.5 P90 BX90S4**	347
17.3	574	1.0	82.5	12000	**A352_82.5 S3 ME3SA4**	**A352_82.5 S3 MX3SA4**	338	**A352_82.5 P90 BE90S4**	**A352_82.5 P90 BX90S4**	339
17.6	548	2.7	81.5	20000	**A503_81.5 S3 ME3SA4**	**A503_81.5 S3 MX3SA4**	346	**A503_81.5 P90 BE90S4**	**A503_81.5 P90 BX90S4**	347
18.0	551	1.5	79.2	15000	**A412_79.2 S3 ME3SA4**	**A412_79.2 S3 MX3SA4**	342	**A412_79.2 P90 BE90S4**	**A412_79.2 P90 BX90S4**	343
19.3	517	1.2	74.3	12000	**A352_74.3 S3 ME3SA4**	**A352_74.3 S3 MX3SA4**	338	**A352_74.3 P90 BE90S4**	**A352_74.3 P90 BX90S4**	339
20.1	496	1.7	71.3	15000	**A412_71.3 S3 ME3SA4**	**A412_71.3 S3 MX3SA4**	342	**A412_71.3 P90 BE90S4**	**A412_71.3 P90 BX90S4**	343
20.4	473	3.2	70.2	20000	**A503_70.2 S3 ME3SA4**	**A503_70.2 S3 MX3SA4**	346	**A503_70.2 P90 BE90S4**	**A503_70.2 P90 BX90S4**	347
21.7	458	1.3	65.8	12000	**A352_65.8 S3 ME3SA4**	**A352_65.8 S3 MX3SA4**	338	**A352_65.8 P90 BE90S4**	**A352_65.8 P90 BX90S4**	339
22.3	446	1.9	64.2	15000	**A412_64.2 S3 ME3SA4**	**A412_64.2 S3 MX3SA4**	342	**A412_64.2 P90 BE90S4**	**A412_64.2 P90 BX90S4**	343
22.4	430	3.5	63.9	20000	**A503_63.9 S3 ME3SA4**	**A503_63.9 S3 MX3SA4**	346	**A503_63.9 P90 BE90S4**	**A503_63.9 P90 BX90S4**	347
23.7	420	1.4	60.4	12000	**A352_60.4 S3 ME3SA4**	**A352_60.4 S3 MX3SA4**	338	**A352_60.4 P90 BE90S4**	**A352_60.4 P90 BX90S4**	339
24.1	413	1.0	59.4	7420	**A302_59.4 S3 ME3SA4**	**A302_59.4 S3 MX3SA4**	334	**A302_59.4 P90 BE90S4**	**A302_59.4 P90 BX90S4**	335
24.3	409	2.1	58.8	15000	**A412_58.8 S3 ME3SA4**	**A412_58.8 S3 MX3SA4**	342	**A412_58.8 P90 BE90S4**	**A412_58.8 P90 BX90S4**	343
26.3	378	1.6	54.3	12000	**A352_54.3 S3 ME3SA4**	**A352_54.3 S3 MX3SA4**	338	**A352_54.3 P90 BE90S4**	**A352_54.3 P90 BX90S4**	339
26.9	370	2.3	53.1	15000	**A412_53.1 S3 ME3SA4**	**A412_53.1 S3 MX3SA4**	342	**A412_53.1 P90 BE90S4**	**A412_53.1 P90 BX90S4**	343
27.1	366	1.1	52.7	7310	**A302_52.7 S3 ME3SA4**	**A302_52.7 S3 MX3SA4**	334	**A302_52.7 P90 BE90S4**	**A302_52.7 P90 BX90S4**	335
29.1	341	1.8	49.1	11800	**A352_49.1 S3 ME3SA4**	**A352_49.1 S3 MX3SA4**	338	**A352_49.1 P90 BE90S4**	**A352_49.1 P90 BX90S4**	339
29.6	336	1.2	48.3	7220	**A302_48.3 S3 ME3SA4**	**A302_48.3 S3 MX3SA4**	334	**A302_48.3 P90 BE90S4**	**A302_48.3 P90 BX90S4**	335
29.6	336	2.5	48.3	15000	**A412_48.3 S3 ME3SA4**	**A412_48.3 S3 MX3SA4**	342	**A412_48.3 P90 BE90S4**	**A412_48.3 P90 BX90S4**	343
31	319	1.9	45.8	11700	**A352_45.8 S3 ME3SA4**	**A352_45.8 S3 MX3SA4**	338	**A352_45.8 P90 BE90S4**	**A352_45.8 P90 BX90S4**	339
32	313	2.6	45.1	15000	**A412_45.1 S3 ME3SA4**	**A412_45.1 S3 MX3SA4**	342	**A412_45.1 P90 BE90S4**	**A412_45.1 P90 BX90S4**	343
33	302	1.4	43.4	7100	**A302_43.4 S3 ME3SA4**	**A302_43.4 S3 MX3SA4**	334	**A302_43.4 P90 BE90S4**	**A302_43.4 P90 BX90S4**	335
34	291	2.1	41.8	11400	**A352_41.8 S3 ME3SA4**	**A352_41.8 S3 MX3SA4**	338	**A352_41.8 P90 BE90S4**	**A352_41.8 P90 BX90S4**	339
36	276	0.9	39.6	4500	**A202_39.6 S3 ME3SA4**	**A202_39.6 S3 MX3SA4**	330	**A202_39.6 P90 BE90S4**	**A202_39.6 P90 BX90S4**	331
36	273	1.5	39.3	6970	**A302_39.3 S3 ME3SA4**	**A302_39.3 S3 MX3SA4**	334	**A302_39.3 P90 BE90S4**	**A302_39.3 P90 BX90S4**	335
39	255	1.6	36.6	6880	**A302_36.6 S3 ME3SA4**	**A302_36.6 S3 MX3SA4**	334	**A302_36.6 P90 BE90S4**	**A302_36.6 P90 BX90S4**	335
39	255	2.4	36.6	11100	**A352_36.6 S3 ME3SA4**	**A352_36.6 S3 MX3SA4**	338	**A352_36.6 P90 BE90S4**	**A352_36.6 P90 BX90S4**	339
40	250	3.1	35.9	14300	**A412_35.9 S3 ME3SA4**	**A412_35.9 S3 MX3SA4**	342	**A412_35.9 P90 BE90S4**	**A412_35.9 P90 BX90S4**	343
40	246	1.0	35.4	4380	**A202_35.4 S3 ME3SA4**	**A202_35.4 S3 MX3SA4**	330	**A202_35.4 P90 BE90S4**	**A202_35.4 P90 BX90S4**	331
43	233	1.8	33.4	6760	**A302_33.4 S3 ME3SA4**	**A302_33.4 S3 MX3SA4**	334	**A302_33.4 P90 BE90S4**	**A302_33.4 P90 BX90S4**	335
43	231	2.6	33.2	10800	**A352_33.2 S3 ME3SA4**	**A352_33.2 S3 MX3SA4**	338	**A352_33.2 P90 BE90S4**	**A352_33.2 P90 BX90S4**	339
46	218	1.1	31.3	4320	**A202_31.3 S3 ME3SA4**	**A202_31.3 S3 MX3SA4**	330	**A202_31.3 P90 BE90S4**	**A202_31.3 P90 BX90S4**	331
49	204	2.0	29.3	6580	**A302_29.3 S3 ME3SA4**	**A302_29.3 S3 MX3SA4**	334	**A302_29.3 P90 BE90S4**	**A302_29.3 P90 BX90S4**	335
49	203	1.2	29.2	4290	**A202_29.2 S3 ME3SA4**	**A202_29.2 S3 MX3SA4**	330	**A202_29.2 P90 BE90S4**	**A202_29.2 P90 BX90S4**	331
50	198	3.0	28.4	10400	**A352_28.4 S3 ME3SA4**	**A352_28.4 S3 MX3SA4**	338	**A352_28.4 P90 BE90S4**	**A352_28.4 P90 BX90S4**	339
54	185	2.2	26.5	6440	**A302_26.5 S3 ME3SA4**	**A302_26.5 S3 MX3SA4**	334	**A302_26.5 P90 BE90S4**	**A302_26.5 P90 BX90S4**	335
54	184	1.4	26.5	4230	**A202_26.5 S3 ME3SA4**	**A202_26.5 S3 MX3SA4**	330	**A202_26.5 P90 BE90S4**	**A202_26.5 P90 BX90S4**	331
56	179	3.4	25.7	10100	**A352_25.7 S3 ME3SA4**	**A352_25.7 S3 MX3SA4**	338	**A352_25.7 P90 BE90S4**	**A352_25.7 P90 BX90S4**	339
60	165	0.9	23.8	3640	**A102_23.8 S3 ME3SA4**	**A102_23.8 S3 MX3SA4**	326	**A102_23.8 P90 BE90S4**	**A102_23.8 P90 BX90S4**	327
62	161	1.6	23.1	4140	**A202_23.1 S3 ME3SA4**	**A202_23.1 S3 MX3SA4**	330	**A202_23.1 P90 BE90S4**	**A202_23.1 P90 BX90S4**	331
63	158	2.6	22.8	6220	**A302_22.8 S3 ME3SA4**	**A302_22.8 S3 MX3SA4**	334	**A302_22.8 P90 BE90S4**	**A302_22.8 P90 BX90S4**	335
67	149	1.0	21.4	4280	**A102_21.4 S3 ME3SA4**	**A102_21.4 S3 MX3SA4**	326	**A102_21.4 P90 BE90S4**	**A102_21.4 P90 BX90S4**	327
67	148	1.7	21.2	4080	**A202_21.2 S3 ME3SA4**	**A202_21.2 S3 MX3SA4**	330	**A202_21.2 P90 BE90S4**	**A202_21.2 P90 BX90S4**	331
70	143	2.9	20.5	6070	**A302_20.5 S3 ME3SA4**	**A302_20.5 S3 MX3SA4**	334	**A302_20.5 P90 BE90S4**	**A302_20.5 P90 BX90S4**	335
77	129	1.2	18.6	3540	**A102_18.6 S3 ME3SA4**	**A102_18.6 S3 MX3SA4**	326	**A102_18.6 P90 BE90S4**	**A102_18.6 P90 BX90S4**	327
79	126	2.0	18.1	3970	**A202_18.1 S3 ME3SA4**	**A202_18.1 S3 MX3SA4**	330	**A202_18.1 P90 BE90S4**	**A202_18.1 P90 BX90S4**	331
80	125	3.2	18.0	5880	**A302_18.0 S3 ME3SA4**	**A302_18.0 S3 MX3SA4**	334	**A302_18.0 P90 BE90S4**	**A302_18.0 P90 BX90S4**	335
87	114	1.3	16.4	4130	**A102_16.4 S3 ME3SA4**	**A102_16.4 S3 MX3SA4**	326	**A102_16.4 P90 BE90S4**	**A102_16.4 P90 BX90S4**	327
88	114	3.4	16.3	5740	**A302_16.3 S3 ME3SA4**	**A302_16.3 S3 MX3SA4**	334	**A302_16.3 P90 BE90S4**	**A302_16.3 P90 BX90S4**	335
88	112	2.2	16.2	3880	**A202_16.2 S3 ME3SA4**	**A202_16.2 S3 MX3SA4**	330	**A202_16.2 P90 BE90S4**	**A202_16.2 P90 BX90S4**	331
102	98	2.5	14.1	3770	**A202_14.1 S3 ME3SA4**	**A202_14.1 S3 MX3SA4**	330	**A202_14.1 P90 BE90S4**	**A202_14.1 P90 BX90S4**	331
103	97	1.5	13.9	3380	**A102_13.9 S3 ME3SA4**	**A102_13.9 S3 MX3SA4**	326	**A102_13.9 P90 BE90S4**	**A102_13.9 P90 BX90S4**	327
116	86	1.6	12.3	3300	**A102_12.3 S3 ME3SA4**	**A102_12.3 S3 MX3SA4**	326	**A102_12.3 P90 BE90S4**	**A102_12.3 P90 BX90S4**	327
120	83	2.5	12.0	3620	**A202_12.0 S3 ME3SA4**	**A202_12.0 S3 MX3SA4**	330	**A202_12.0 P90 BE90S4**	**A202_12.0 P90 BX90S4**	331
135	73	2.0	10.6	3210	**A102_10.6 S3 ME3SA4**	**A102_10.6 S3 MX3SA4**	326	**A102_10.6 P90 BE90S4**	**A102_10.6 P90 BX90S4**	327
138	72	3.1	10.3	3510	**A202_10.3 S3 ME3SA4**	**A202_10.3 S3 MX3SA4**	330	**A202_10.3 P90 BE90S4**	**A202_10.3 P90 BX90S4**	331
149	67	2.1	9.6	3140	**A102_9.6 S3 ME3SA4**	**A102_9.6 S3 MX3SA4**	326	**A102_9.6 P90 BE90S4**	**A102_9.6 P90 BX90S4**	327
153	65	3.2	9.4	3420	**A202_9.4 S3 ME3SA4**	**A202_9.4 S3 MX3SA4**	330	**A202_9.4 P90 BE90S4**	**A202_9.4 P90 BX90S4**	331
168	59	2.4	8.5	3630	**A102_8.5 S3 ME3SA4**	**A102_8.5 S3 MX3SA4**	326	**A102_8.5 P90 BE90S4**	**A102_8.5 P90 BX90S4**	327

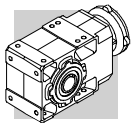

1.1 kW

n_2 min-1	M_2 Nm	S	i	R_{n2} N	IE2	IE3		IEC IE2	IEC IE3	
198	50	2.8	7.2	2940	**A102_7.2 S3 ME3SA4**	**A102_7.2 S3 MX3SA4**	326	**A102_7.2 P90 BE90S4**	**A102_7.2 P90 BX90S4**	327
226	44	3.2	6.3	3390	**A102_6.3 S3 ME3SA4**	**A102_6.3 S3 MX3SA4**	326	**A102_6.3 P90 BE90S4**	**A102_6.3 P90 BX90S4**	327
230	43	3.3	12.3	2830	**A102_12.3 S2 ME2SB2**		326	**A102_12.3 P80 BE80B2**		327
294	34	2.8	9.6	1600	**A052_9.6 S2 ME2SB2**		323	**A052_9.6 P80 BE80B2**		323
332	30	3.0	8.5	1560	**A052_8.5 S2 ME2SB2**		323	**A052_8.5 P80 BE80B2**		323
392	25	3.4	7.2	1500	**A052_7.2 S2 ME2SB2**		323	**A052_7.2 P80 BE80B2**		323
447	22	3.6	6.3	1450	**A052_6.3 S2 ME2SB2**		323	**A052_6.3 P80 BE80B2**		323
518	19.1	3.9	5.5	1400	**A052_5.5 S2 ME2SB2**		323	**A052_5.5 P80 BE80B2**		323

1.1 kW

n_2 min-1	M_2 Nm	S	i	R_{n2} N	IE3		IEC IE3	
0.88	10751	1.3	1632	75000			**A904_1632 P90 BXN90S4**	365
0.95	9924	1.4	1507	75000			**A904_1507 P90 BXN90S4**	365
1.1	8825	0.9	1340	65000			**A804_1340 P90 BXN90S4**	362
1.1	8720	1.6	1324	75000			**A904_1324 P90 BXN90S4**	365
1.2	8146	1.0	1237	65000			**A804_1237 P90 BXN90S4**	362
1.2	8049	1.7	1222	75000			**A904_1222 P90 BXN90S4**	365
1.3	7314	1.9	1111	75000			**A904_1111 P90 BXN90S4**	365
1.3	7145	1.1	1085	65000			**A804_1085 P90 BXN90S4**	362
1.4	6752	2.1	1025	75000			**A904_1025 P90 BXN90S4**	365
1.4	6595	1.2	1001	65000			**A804_1001 P90 BXN90S4**	362
1.5	6172	2.3	937.2	75000			**A904_937.2 P90 BXN90S4**	365
1.6	5919	1.4	898.7	65000			**A804_898.7 P90 BXN90S4**	362
1.7	5697	2.5	865.1	75000			**A904_865.1 P90 BXN90S4**	365
1.7	5633	0.9	855.3	50000			**A704_855.3 P90 BXN90S4**	359
1.7	5463	1.5	829.5	65000			**A804_829.5 P90 BXN90S4**	362
1.9	5051	2.8	766.9	75000			**A904_766.9 P90 BXN90S4**	365
1.9	5031	1.0	763.9	50000			**A704_763.9 P90 BXN90S4**	359
1.9	5019	1.6	762.1	65000			**A804_762.1 P90 BXN90S4**	362
2.0	4662	3.0	707.9	75000			**A904_707.9 P90 BXN90S4**	365
2.0	4644	1.1	705.1	50000			**A704_705.1 P90 BXN90S4**	359
2.0	4633	1.7	703.5	65000			**A804_703.5 P90 BXN90S4**	362
2.2	4245	1.2	644.6	50000			**A704_644.6 P90 BXN90S4**	359
2.4	3999	2.0	607.2	65000			**A804_607.2 P90 BXN90S4**	362
2.4	3962	3.5	601.6	75000			**A904_601.6 P90 BXN90S4**	365
2.4	3919	1.3	595.0	50000			**A704_595.0 P90 BXN90S4**	359
2.6	3691	2.2	560.5	65000			**A804_560.5 P90 BXN90S4**	362
2.8	3394	1.5	515.4	50000			**A704_515.4 P90 BXN90S4**	359
3.0	3154	2.5	478.9	65000			**A804_478.9 P90 BXN90S4**	362
3.0	3133	1.6	475.8	50000			**A704_475.8 P90 BXN90S4**	359
3.2	2912	2.7	442.1	65000			**A804_442.1 P90 BXN90S4**	362
3.3	2887	1.0	438.4	30000			**A604_438.4 P90 BXN90S4**	355
3.5	2665	1.1	404.7	30000			**A604_404.7 P90 BXN90S4**	355
3.6	2635	1.9	400.2	50000			**A704_400.2 P90 BXN90S4**	359
3.7	2526	3.2	383.5	65000			**A804_383.5 P90 BXN90S4**	362
3.9	2433	2.1	369.4	50000			**A704_369.4 P90 BXN90S4**	359
4.0	2331	3.4	354.0	65000			**A804_354.0 P90 BXN90S4**	362
4.1	2313	1.2	351.2	30000			**A604_351.2 P90 BXN90S4**	355
4.4	2139	0.9	324.7	30000			**A554_324.7 P90 BXN90S4**	351
4.4	2135	1.3	324.2	30000			**A604_324.2 P90 BXN90S4**	355
4.5	2083	2.4	316.4	50000			**A704_316.4 P90 BXN90S4**	359
4.9	1923	2.6	292.0	50000			**A704_292.0 P90 BXN90S4**	359
5.0	1886	1.5	286.3	30000			**A604_286.3 P90 BXN90S4**	355
5.4	1741	1.6	264.3	30000			**A604_264.3 P90 BXN90S4**	355
5.4	1730	1.2	262.6	30000			**A554_262.6 P90 BXN90S4**	351
5.5	1718	0.9	260.9	20000			**A504_260.9 P90 BXN90S4**	347
6.0	1571	3.2	238.6	50000			**A704_238.6 P90 BXN90S4**	359
6.2	1528	1.0	232.0	20000			**A504_232.0 P90 BXN90S4**	347

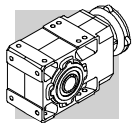

1.1 kW

n_2 min-1	M_2 Nm	S	i	R_{n2} N	 IE3		 IEC IE3	
6.3	1489	1.9	226.1	30000			**A604_226.1 P90 BXN90S4**	355
6.5	1451	3.4	220.3	50000			**A704_220.3 P90 BXN90S4**	359
6.8	1390	1.1	211.0	20000			**A504_211.0 P90 BXN90S4**	347
6.9	1375	2.0	208.7	30000			**A604_208.7 P90 BXN90S4**	355
6.9	1370	1.4	208.1	30000			**A554_208.1 P90 BXN90S4**	351
7.4	1308	1.5	194.2	30000			**A553_194.2 P90 BXN90S4**	351
7.5	1283	1.2	190.6	20000			**A503_190.6 P90 BXN90S4**	347
7.7	1251	2.2	185.8	30000			**A603_185.8 P90 BXN90S4**	355
8.2	1179	1.7	175.0	30000			**A553_175.0 P90 BXN90S4**	351
8.2	1167	1.3	173.4	20000			**A503_173.4 P90 BXN90S4**	347
8.3	1155	2.4	171.5	30000			**A603_171.5 P90 BXN90S4**	355
8.9	1080	1.9	160.4	30000			**A553_160.4 P90 BXN90S4**	351
9.2	1051	2.7	156.0	30000			**A603_156.0 P90 BXN90S4**	355
9.3	1041	1.4	154.6	20000			**A503_154.6 P90 BXN90S4**	347
9.7	989	2.0	146.8	30000			**A553_146.8 P90 BXN90S4**	351
9.9	970	2.9	144.0	30000			**A603_144.0 P90 BXN90S4**	355
10.2	947	1.6	140.6	20000			**A503_140.6 P90 BXN90S4**	347
10.7	898	3.1	133.3	30000			**A603_133.3 P90 BXN90S4**	355
10.8	894	2.2	132.7	30000			**A553_132.7 P90 BXN90S4**	351
11.0	873	1.7	129.7	20000			**A503_129.7 P90 BXN90S4**	347
11.5	834	2.4	123.9	30000			**A553_123.9 P90 BXN90S4**	351
11.6	828	3.4	123.0	30000			**A603_123.0 P90 BXN90S4**	355
12.1	794	1.9	118.0	20000			**A503_118.0 P90 BXN90S4**	347
12.3	780	1.1	115.9	15000			**A413_115.9 P90 BXN90S4**	343
13.1	737	2.0	109.4	20000			**A503_109.4 P90 BXN90S4**	347
14.1	683	2.9	101.4	30000			**A553_101.4 P90 BXN90S4**	351
14.4	670	2.2	99.5	20000			**A503_99.5 P90 BXN90S4**	347
15.4	625	1.3	92.8	15000			**A413_92.8 P90 BXN90S4**	343
16.0	603	2.5	89.5	20000			**A503_89.5 P90 BXN90S4**	347
17.3	574	1.0	82.5	12000			**A352_82.5 P90 BXN90S4**	339
17.6	548	2.7	81.5	20000			**A503_81.5 P90 BXN90S4**	347
18.0	551	1.5	79.2	15000			**A412_79.2 P90 BXN90S4**	343
19.3	517	1.2	74.3	12000			**A352_74.3 P90 BXN90S4**	339
20.1	496	1.7	71.3	15000			**A412_71.3 P90 BXN90S4**	343
20.4	473	3.2	70.2	20000			**A503_70.2 P90 BXN90S4**	347
21.7	458	1.3	65.8	12000			**A352_65.8 P90 BXN90S4**	339
22.3	446	1.9	64.2	15000			**A412_64.2 P90 BXN90S4**	343
22.4	430	3.5	63.9	20000			**A503_63.9 P90 BXN90S4**	347
23.7	420	1.4	60.4	12000			**A352_60.4 P90 BXN90S4**	339
24.1	413	1.0	59.4	7420			**A302_59.4 P90 BXN90S4**	335
24.3	409	2.1	58.8	15000			**A412_58.8 P90 BXN90S4**	343
26.3	378	1.6	54.3	12000			**A352_54.3 P90 BXN90S4**	339
26.9	370	2.3	53.1	15000			**A412_53.1 P90 BXN90S4**	343
27.1	366	1.1	52.7	7310			**A302_52.7 P90 BXN90S4**	335
29.1	341	1.8	49.1	11800			**A352_49.1 P90 BXN90S4**	339
29.6	336	1.2	48.3	7220			**A302_48.3 P90 BXN90S4**	335
29.6	336	2.5	48.3	15000			**A412_48.3 P90 BXN90S4**	343
31	319	1.9	45.8	11700			**A352_45.8 P90 BXN90S4**	339
32	313	2.6	45.1	15000			**A412_45.1 P90 BXN90S4**	343
33	302	1.4	43.4	7100			**A302_43.4 P90 BXN90S4**	335
34	291	2.1	41.8	11400			**A352_41.8 P90 BXN90S4**	339
36	276	0.9	39.6	4500			**A202_39.6 P90 BXN90S4**	331
36	273	1.5	39.3	6970			**A302_39.3 P90 BXN90S4**	335
39	255	1.6	36.6	6880			**A302_36.6 P90 BXN90S4**	335
39	255	2.4	36.6	11100			**A352_36.6 P90 BXN90S4**	339
40	250	3.1	35.9	14300			**A412_35.9 P90 BXN90S4**	343
40	246	1.0	35.4	4380			**A202_35.4 P90 BXN90S4**	331
43	233	1.8	33.4	6760			**A302_33.4 P90 BXN90S4**	335
43	231	2.6	33.2	10800			**A352_33.2 P90 BXN90S4**	339
46	218	1.1	31.3	4320			**A202_31.3 P90 BXN90S4**	331
49	204	2.0	29.3	6580			**A302_29.3 P90 BXN90S4**	335

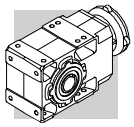

1.1 kW

n_2 min-1	M_2 Nm	S	i	R_{n2} N	IE3		IEC IE3	
49	203	1.2	29.2	4290			**A202_29.2 P90 BXN90S4**	331
50	198	3.0	28.4	10400			**A352_28.4 P90 BXN90S4**	339
54	185	2.2	26.5	6440			**A302_26.5 P90 BXN90S4**	335
54	184	1.4	26.5	4230			**A202_26.5 P90 BXN90S4**	331
56	179	3.4	25.7	10100			**A352_25.7 P90 BXN90S4**	339
60	165	0.9	23.8	3640			**A102_23.8 P90 BXN90S4**	327
62	161	1.6	23.1	4140			**A202_23.1 P90 BXN90S4**	331
63	158	2.6	22.8	6220			**A302_22.8 P90 BXN90S4**	335
67	149	1.0	21.4	4280			**A102_21.4 P90 BXN90S4**	327
67	148	1.7	21.2	4080			**A202_21.2 P90 BXN90S4**	331
70	143	2.9	20.5	6070			**A302_20.5 P90 BXN90S4**	335
77	129	1.2	18.6	3540			**A102_18.6 P90 BXN90S4**	327
79	126	2.0	18.1	3970			**A202_18.1 P90 BXN90S4**	331
80	125	3.2	18.0	5880			**A302_18.0 P90 BXN90S4**	335
87	114	1.3	16.4	4130			**A102_16.4 P90 BXN90S4**	327
88	114	3.4	16.3	5740			**A302_16.3 P90 BXN90S4**	335
88	112	2.2	16.2	3880			**A202_16.2 P90 BXN90S4**	331
102	98	2.5	14.1	3770			**A202_14.1 P90 BXN90S4**	331
103	97	1.5	13.9	3380			**A102_13.9 P90 BXN90S4**	327
116	86	1.6	12.3	3300			**A102_12.3 P90 BXN90S4**	327
120	83	2.5	12.0	3620			**A202_12.0 P90 BXN90S4**	331
135	73	2.0	10.6	3210			**A102_10.6 P90 BXN90S4**	327
138	72	3.1	10.3	3510			**A202_10.3 P90 BXN90S4**	331
149	67	2.1	9.6	3140			**A102_9.6 P90 BXN90S4**	327
153	65	3.2	9.4	3420			**A202_9.4 P90 BXN90S4**	331
168	59	2.4	8.5	3630			**A102_8.5 P90 BXN90S4**	327
198	50	2.8	7.2	2940			**A102_7.2 P90 BXN90S4**	327
226	44	3.2	6.3	3390			**A102_6.3 P90 BXN90S4**	327

1.5 kW

n_2 min-1	M_2 Nm	S	i	R_{n2} N	IE2	IE3		IEC IE2	IE3	
0.88	14528	1.0	1632	75000	**A904_1632 S3 ME3SB4**	**A904_1632 S3 MX3SB4**	364	**A904_1632 P90 BE90LA4**	**A904_1632 P90 BX90LA4**	365
0.95	13410	1.0	1507	75000	**A904_1507 S3 ME3SB4**	**A904_1507 S3 MX3SB4**	364	**A904_1507 P90 BE90LA4**	**A904_1507 P90 BX90LA4**	365
1.1	11784	1.2	1324	75000	**A904_1324 S3 ME3SB4**	**A904_1324 S3 MX3SB4**	364	**A904_1324 P90 BE90LA4**	**A904_1324 P90 BX90LA4**	365
1.2	10877	1.3	1222	75000	**A904_1222 S3 ME3SB4**	**A904_1222 S3 MX3SB4**	364	**A904_1222 P90 BE90LA4**	**A904_1222 P90 BX90LA4**	365
1.3	9884	1.4	1111	75000	**A904_1111 S3 ME3SB4**	**A904_1111 S3 MX3SB4**	364	**A904_1111 P90 BE90LA4**	**A904_1111 P90 BX90LA4**	365
1.4	9124	1.5	1025	75000	**A904_1025 S3 ME3SB4**	**A904_1025 S3 MX3SB4**	364	**A904_1025 P90 BE90LA4**	**A904_1025 P90 BX90LA4**	365
1.4	8913	0.9	1001	65000	**A804_1001 S3 ME3SB4**	**A804_1001 S3 MX3SB4**	361	**A804_1001 P90 BE90LA4**	**A804_1001 P90 BX90LA4**	362
1.5	8341	1.7	937.2	75000	**A904_937.2 S3 ME3SB4**	**A904_937.2 S3 MX3SB4**	364	**A904_937.2 P90 BE90LA4**	**A904_937.2 P90 BX90LA4**	365
1.6	7998	1.0	898.7	65000	**A804_898.7 S3 ME3SB4**	**A804_898.7 S3 MX3SB4**	361	**A804_898.7 P90 BE90LA4**	**A804_898.7 P90 BX90LA4**	362
1.7	7699	1.8	865.1	75000	**A904_865.1 S3 ME3SB4**	**A904_865.1 S3 MX3SB4**	364	**A904_865.1 P90 BE90LA4**	**A904_865.1 P90 BX90LA4**	365
1.7	7383	1.1	829.5	65000	**A804_829.5 S3 ME3SB4**	**A804_829.5 S3 MX3SB4**	361	**A804_829.5 P90 BE90LA4**	**A804_829.5 P90 BX90LA4**	362
1.9	6826	2.1	766.9	75000	**A904_766.9 S3 ME3SB4**	**A904_766.9 S3 MX3SB4**	364	**A904_766.9 P90 BE90LA4**	**A904_766.9 P90 BX90LA4**	365
1.9	6783	1.2	762.1	65000	**A804_762.1 S3 ME3SB4**	**A804_762.1 S3 MX3SB4**	361	**A804_762.1 P90 BE90LA4**	**A804_762.1 P90 BX90LA4**	362
2.0	6300	2.2	707.9	75000	**A904_707.9 S3 ME3SB4**	**A904_707.9 S3 MX3SB4**	364	**A904_707.9 P90 BE90LA4**	**A904_707.9 P90 BX90LA4**	365
2.0	6261	1.3	703.5	65000	**A804_703.5 S3 ME3SB4**	**A804_703.5 S3 MX3SB4**	361	**A804_703.5 P90 BE90LA4**	**A804_703.5 P90 BX90LA4**	362
2.2	5737	0.9	644.6	50000	**A704_644.6 S3 ME3SB4**	**A704_644.6 S3 MX3SB4**	358	**A704_644.6 P90 BE90LA4**	**A704_644.6 P90 BX90LA4**	359
2.4	5404	1.5	607.2	65000	**A804_607.2 S3 ME3SB4**	**A804_607.2 S3 MX3SB4**	361	**A804_607.2 P90 BE90LA4**	**A804_607.2 P90 BX90LA4**	362
2.4	5354	2.6	601.6	75000	**A904_601.6 S3 ME3SB4**	**A904_601.6 S3 MX3SB4**	364	**A904_601.6 P90 BE90LA4**	**A904_601.6 P90 BX90LA4**	365
2.4	5296	0.9	595.0	50000	**A704_595.0 S3 ME3SB4**	**A704_595.0 S3 MX3SB4**	358	**A704_595.0 P90 BE90LA4**	**A704_595.0 P90 BX90LA4**	359
2.6	4988	1.6	560.5	65000	**A804_560.5 S3 ME3SB4**	**A804_560.5 S3 MX3SB4**	361	**A804_560.5 P90 BE90LA4**	**A804_560.5 P90 BX90LA4**	362
2.6	4942	2.8	555.3	75000	**A904_555.3 S3 ME3SB4**	**A904_555.3 S3 MX3SB4**	364	**A904_555.3 P90 BE90LA4**	**A904_555.3 P90 BX90LA4**	365
2.8	4587	1.1	515.4	50000	**A704_515.4 S3 ME3SB4**	**A704_515.4 S3 MX3SB4**	358	**A704_515.4 P90 BE90LA4**	**A704_515.4 P90 BX90LA4**	359
2.9	4331	3.2	486.6	75000	**A904_486.6 S3 ME3SB4**	**A904_486.6 S3 MX3SB4**	364	**A904_486.6 P90 BE90LA4**	**A904_486.6 P90 BX90LA4**	365
3.0	4262	1.9	478.9	65000	**A804_478.9 S3 ME3SB4**	**A804_478.9 S3 MX3SB4**	361	**A804_478.9 P90 BE90LA4**	**A804_478.9 P90 BX90LA4**	362
3.0	4234	1.2	475.8	50000	**A704_475.8 S3 ME3SB4**	**A704_475.8 S3 MX3SB4**	358	**A704_475.8 P90 BE90LA4**	**A704_475.8 P90 BX90LA4**	359
3.2	3998	3.5	449.2	75000	**A904_449.2 S3 ME3SB4**	**A904_449.2 S3 MX3SB4**	364	**A904_449.2 P90 BE90LA4**	**A904_449.2 P90 BX90LA4**	365

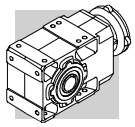

1.5 kW

n_2	M_2	S	i	R_{n2}	IE2	IE3		IEC IE2	IEC IE3	
min-1	Nm			N						
3.2	3935	2.0	442.1	65000	**A804_442.1 S3 ME3SB4**	**A804_442.1 S3 MX3SB4**	361	**A804_442.1 P90 BE90LA4**	**A804_442.1 P90 BX90LA4**	362
3.6	3561	1.4	400.2	50000	**A704_400.2 S3 ME3SB4**	**A704_400.2 S3 MX3SB4**	358	**A704_400.2 P90 BE90LA4**	**A704_400.2 P90 BX90LA4**	359
3.7	3413	2.3	383.5	65000	**A804_383.5 S3 ME3SB4**	**A804_383.5 S3 MX3SB4**	361	**A804_383.5 P90 BE90LA4**	**A804_383.5 P90 BX90LA4**	362
3.9	3288	1.5	369.4	50000	**A704_369.4 S3 ME3SB4**	**A704_369.4 S3 MX3SB4**	358	**A704_369.4 P90 BE90LA4**	**A704_369.4 P90 BX90LA4**	359
4.0	3150	2.5	354.0	65000	**A804_354.0 S3 ME3SB4**	**A804_354.0 S3 MX3SB4**	361	**A804_354.0 P90 BE90LA4**	**A804_354.0 P90 BX90LA4**	362
4.1	3126	0.9	351.2	30000	**A604_351.2 S3 ME3SB4**	**A604_351.2 S3 MX3SB4**	354	**A604_351.2 P90 BE90LA4**	**A604_351.2 P90 BX90LA4**	355
4.4	2885	1.0	324.2	30000	**A604_324.2 S3 ME3SB4**	**A604_324.2 S3 MX3SB4**	354	**A604_324.2 P90 BE90LA4**	**A604_324.2 P90 BX90LA4**	355
4.5	2816	1.8	316.4	50000	**A704_316.4 S3 ME3SB4**	**A704_316.4 S3 MX3SB4**	358	**A704_316.4 P90 BE90LA4**	**A704_316.4 P90 BX90LA4**	359
4.8	2673	3.0	300.4	65000	**A804_300.4 S3 ME3SB4**	**A804_300.4 S3 MX3SB4**	361	**A804_300.4 P90 BE90LA4**	**A804_300.4 P90 BX90LA4**	362
4.9	2599	1.9	292.0	50000	**A704_292.0 S3 ME3SB4**	**A704_292.0 S3 MX3SB4**	358	**A704_292.0 P90 BE90LA4**	**A704_292.0 P90 BX90LA4**	359
5.0	2548	1.1	286.3	30000	**A604_286.3 S3 ME3SB4**	**A604_286.3 S3 MX3SB4**	354	**A604_286.3 P90 BE90LA4**	**A604_286.3 P90 BX90LA4**	355
5.2	2468	3.2	277.3	65000	**A804_277.3 S3 ME3SB4**	**A804_277.3 S3 MX3SB4**	361	**A804_277.3 P90 BE90LA4**	**A804_277.3 P90 BX90LA4**	362
5.4	2352	1.2	264.3	30000	**A604_264.3 S3 ME3SB4**	**A604_264.3 S3 MX3SB4**	354	**A604_264.3 P90 BE90LA4**	**A604_264.3 P90 BX90LA4**	355
6.0	2124	2.4	238.6	50000	**A704_238.6 S3 ME3SB4**	**A704_238.6 S3 MX3SB4**	358	**A704_238.6 P90 BE90LA4**	**A704_238.6 P90 BX90LA4**	359
6.3	2013	1.4	226.1	30000	**A604_226.1 S3 ME3SB4**	**A604_226.1 S3 MX3SB4**	354	**A604_226.1 P90 BE90LA4**	**A604_226.1 P90 BX90LA4**	355
6.5	1960	2.6	220.3	50000	**A704_220.3 S3 ME3SB4**	**A704_220.3 S3 MX3SB4**	358	**A704_220.3 P90 BE90LA4**	**A704_220.3 P90 BX90LA4**	359
6.9	1858	1.5	208.7	30000	**A604_208.7 S3 ME3SB4**	**A604_208.7 S3 MX3SB4**	354	**A604_208.7 P90 BE90LA4**	**A604_208.7 P90 BX90LA4**	355
6.9	1852	1.1	208.1	30000	**A554_208.1 S3 ME3SB4**	**A554_208.1 S3 MX3SB4**	350	**A554_208.1 P90 BE90LA4**	**A554_208.1 P90 BX90LA4**	351
7.4	1767	1.1	194.2	30000	**A553_194.2 S3 ME3SB4**	**A553_194.2 S3 MX3SB4**	350	**A553_194.2 P90 BE90LA4**	**A553_194.2 P90 BX90LA4**	351
7.7	1690	1.7	185.8	30000	**A603_185.8 S3 ME3SB4**	**A603_185.8 S3 MX3SB4**	354	**A603_185.8 P90 BE90LA4**	**A603_185.8 P90 BX90LA4**	355
7.8	1637	3.1	183.9	50000	**A704_183.9 S3 ME3SB4**	**A704_183.9 S3 MX3SB4**	358	**A704_183.9 P90 BE90LA4**	**A704_183.9 P90 BX90LA4**	359
8.2	1593	1.3	175.0	30000	**A553_175.0 S3 ME3SB4**	**A553_175.0 S3 MX3SB4**	350	**A553_175.0 P90 BE90LA4**	**A553_175.0 P90 BX90LA4**	351
8.2	1578	1.0	173.4	20000	**A503_173.4 S3 ME3SB4**	**A503_173.4 S3 MX3SB4**	346	**A503_173.4 P90 BE90LA4**	**A503_173.4 P90 BX90LA4**	347
8.3	1560	1.8	171.5	30000	**A603_171.5 S3 ME3SB4**	**A603_171.5 S3 MX3SB4**	354	**A603_171.5 P90 BE90LA4**	**A603_171.5 P90 BX90LA4**	355
8.4	1511	3.3	169.8	50000	**A704_169.8 S3 ME3SB4**	**A704_169.8 S3 MX3SB4**	358	**A704_169.8 P90 BE90LA4**	**A704_169.8 P90 BX90LA4**	359
8.9	1460	1.4	160.4	30000	**A553_160.4 S3 ME3SB4**	**A553_160.4 S3 MX3SB4**	350	**A553_160.4 P90 BE90LA4**	**A553_160.4 P90 BX90LA4**	351
9.2	1420	2.0	156.0	30000	**A603_156.0 S3 ME3SB4**	**A603_156.0 S3 MX3SB4**	354	**A603_156.0 P90 BE90LA4**	**A603_156.0 P90 BX90LA4**	355
9.3	1407	1.1	154.6	20000	**A503_154.6 S3 ME3SB4**	**A503_154.6 S3 MX3SB4**	346	**A503_154.6 P90 BE90LA4**	**A503_154.6 P90 BX90LA4**	347
9.3	1399	2.9	153.7	50000	**A703_153.7 S3 ME3SB4**	**A703_153.7 S3 MX3SB4**	358	**A703_153.7 P90 BE90LA4**	**A703_153.7 P90 BX90LA4**	359
9.7	1336	1.5	146.8	30000	**A553_146.8 S3 ME3SB4**	**A553_146.8 S3 MX3SB4**	350	**A553_146.8 P90 BE90LA4**	**A553_146.8 P90 BX90LA4**	351
9.9	1311	2.1	144.0	30000	**A603_144.0 S3 ME3SB4**	**A603_144.0 S3 MX3SB4**	354	**A603_144.0 P90 BE90LA4**	**A603_144.0 P90 BX90LA4**	355
10.2	1280	1.2	140.6	20000	**A503_140.6 S3 ME3SB4**	**A503_140.6 S3 MX3SB4**	346	**A503_140.6 P90 BE90LA4**	**A503_140.6 P90 BX90LA4**	347
10.7	1213	2.3	133.3	30000	**A603_133.3 S3 ME3SB4**	**A603_133.3 S3 MX3SB4**	354	**A603_133.3 P90 BE90LA4**	**A603_133.3 P90 BX90LA4**	355
10.8	1208	1.7	132.7	30000	**A553_132.7 S3 ME3SB4**	**A553_132.7 S3 MX3SB4**	350	**A553_132.7 P90 BE90LA4**	**A553_132.7 P90 BX90LA4**	351
11.0	1180	1.3	129.7	20000	**A503_129.7 S3 ME3SB4**	**A503_129.7 S3 MX3SB4**	346	**A503_129.7 P90 BE90LA4**	**A503_129.7 P90 BX90LA4**	347
11.5	1127	1.8	123.9	30000	**A553_123.9 S3 ME3SB4**	**A553_123.9 S3 MX3SB4**	350	**A553_123.9 P90 BE90LA4**	**A553_123.9 P90 BX90LA4**	351
11.6	1120	2.5	123.0	30000	**A603_123.0 S3 ME3SB4**	**A603_123.0 S3 MX3SB4**	354	**A603_123.0 P90 BE90LA4**	**A603_123.0 P90 BX90LA4**	355
12.1	1073	1.4	118.0	20000	**A503_118.0 S3 ME3SB4**	**A503_118.0 S3 MX3SB4**	346	**A503_118.0 P90 BE90LA4**	**A503_118.0 P90 BX90LA4**	347
13.1	996	1.5	109.4	20000	**A503_109.4 S3 ME3SB4**	**A503_109.4 S3 MX3SB4**	346	**A503_109.4 P90 BE90LA4**	**A503_109.4 P90 BX90LA4**	347
13.3	981	2.9	107.8	30000	**A603_107.8 S3 ME3SB4**	**A603_107.8 S3 MX3SB4**	354	**A603_107.8 P90 BE90LA4**	**A603_107.8 P90 BX90LA4**	355
14.1	923	2.2	101.4	30000	**A553_101.4 S3 ME3SB4**	**A553_101.4 S3 MX3SB4**	350	**A553_101.4 P90 BE90LA4**	**A553_101.4 P90 BX90LA4**	351
14.4	906	1.7	99.5	20000	**A503_99.5 S3 ME3SB4**	**A503_99.5 S3 MX3SB4**	346	**A503_99.5 P90 BE90LA4**	**A503_99.5 P90 BX90LA4**	347
14.4	906	3.1	99.5	30000	**A603_99.5 S3 ME3SB4**	**A603_99.5 S3 MX3SB4**	354	**A603_99.5 P90 BE90LA4**	**A603_99.5 P90 BX90LA4**	355
15.4	844	0.9	92.8	15000	**A413_92.8 S3 ME3SB4**	**A413_92.8 S3 MX3SB4**	342	**A413_92.8 P90 BE90LA4**	**A413_92.8 P90 BX90LA4**	343
16.0	815	1.8	89.5	20000	**A503_89.5 S3 ME3SB4**	**A503_89.5 S3 MX3SB4**	346	**A503_89.5 P90 BE90LA4**	**A503_89.5 P90 BX90LA4**	347
16.6	786	3.6	86.4	30000	**A603_86.4 S3 ME3SB4**	**A603_86.4 S3 MX3SB4**	354	**A603_86.4 P90 BE90LA4**	**A603_86.4 P90 BX90LA4**	355
17.6	741	2.0	81.5	20000	**A503_81.5 S3 ME3SB4**	**A503_81.5 S3 MX3SB4**	346	**A503_81.5 P90 BE90LA4**	**A503_81.5 P90 BX90LA4**	347
18.0	724	2.8	79.5	30000	**A553_79.5 S3 ME3SB4**	**A553_79.5 S3 MX3SB4**	350	**A553_79.5 P90 BE90LA4**	**A553_79.5 P90 BX90LA4**	351
18.0	745	1.1	79.2	15000	**A412_79.2 S3 ME3SB4**	**A412_79.2 S3 MX3SB4**	342	**A412_79.2 P90 BE90LA4**	**A412_79.2 P90 BX90LA4**	343
20.1	670	1.3	71.3	15000	**A412_71.3 S3 ME3SB4**	**A412_71.3 S3 MX3SB4**	342	**A412_71.3 P90 BE90LA4**	**A412_71.3 P90 BX90LA4**	343
20.4	639	2.3	70.2	20000	**A503_70.2 S3 ME3SB4**	**A503_70.2 S3 MX3SB4**	346	**A503_70.2 P90 BE90LA4**	**A503_70.2 P90 BX90LA4**	347
21.7	619	1.0	65.8	11600	**A352_65.8 S3 ME3SB4**	**A352_65.8 S3 MX3SB4**	338	**A352_65.8 P90 BE90LA4**	**A352_65.8 P90 BX90LA4**	339
22.2	585	3.4	64.3	30000	**A553_64.3 S3 ME3SB4**	**A553_64.3 S3 MX3SB4**	350	**A553_64.3 P90 BE90LA4**	**A553_64.3 P90 BX90LA4**	351
22.3	603	1.4	64.2	15000	**A412_64.2 S3 ME3SB4**	**A412_64.2 S3 MX3SB4**	342	**A412_64.2 P90 BE90LA4**	**A412_64.2 P90 BX90LA4**	343
22.4	581	2.6	63.9	20000	**A503_63.9 S3 ME3SB4**	**A503_63.9 S3 MX3SB4**	346	**A503_63.9 P90 BE90LA4**	**A503_63.9 P90 BX90LA4**	347
23.7	567	1.1	60.4	11500	**A352_60.4 S3 ME3SB4**	**A352_60.4 S3 MX3SB4**	338	**A352_60.4 P90 BE90LA4**	**A352_60.4 P90 BX90LA4**	339
24.3	553	1.5	58.8	15000	**A412_58.8 S3 ME3SB4**	**A412_58.8 S3 MX3SB4**	342	**A412_58.8 P90 BE90LA4**	**A412_58.8 P90 BX90LA4**	343
25.2	517	2.9	56.8	20000	**A503_56.8 S3 ME3SB4**	**A503_56.8 S3 MX3SB4**	346	**A503_56.8 P90 BE90LA4**	**A503_56.8 P90 BX90LA4**	347
26.3	510	1.2	54.3	11300	**A352_54.3 S3 ME3SB4**	**A352_54.3 S3 MX3SB4**	338	**A352_54.3 P90 BE90LA4**	**A352_54.3 P90 BX90LA4**	339
26.9	500	1.7	53.1	15000	**A412_53.1 S3 ME3SB4**	**A412_53.1 S3 MX3SB4**	342	**A412_53.1 P90 BE90LA4**	**A412_53.1 P90 BX90LA4**	343
27.7	470	3.2	51.7	19700	**A503_51.7 S3 ME3SB4**	**A503_51.7 S3 MX3SB4**	346	**A503_51.7 P90 BE90LA4**	**A503_51.7 P90 BX90LA4**	347
29.1	461	1.3	49.1	11100	**A352_49.1 S3 ME3SB4**	**A352_49.1 S3 MX3SB4**	338	**A352_49.1 P90 BE90LA4**	**A352_49.1 P90 BX90LA4**	339
29.6	454	0.9	48.3	6680	**A302_48.3 S3 ME3SB4**	**A302_48.3 S3 MX3SB4**	334	**A302_48.3 P90 BE90LA4**	**A302_48.3 P90 BX90LA4**	335
29.6	454	1.9	48.3	14900	**A412_48.3 S3 ME3SB4**	**A412_48.3 S3 MX3SB4**	342	**A412_48.3 P90 BE90LA4**	**A412_48.3 P90 BX90LA4**	343
31	431	1.4	45.8	11000	**A352_45.8 S3 ME3SB4**	**A352_45.8 S3 MX3SB4**	338	**A352_45.8 P90 BE90LA4**	**A352_45.8 P90 BX90LA4**	339
32	424	2.0	45.1	14600	**A412_45.1 S3 ME3SB4**	**A412_45.1 S3 MX3SB4**	342	**A412_45.1 P90 BE90LA4**	**A412_45.1 P90 BX90LA4**	343
33	408	1.0	43.4	6450	**A302_43.4 S3 ME3SB4**	**A302_43.4 S3 MX3SB4**	334	**A302_43.4 P90 BE90LA4**	**A302_43.4 P90 BX90LA4**	335

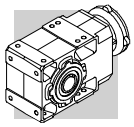

1.5 kW

n_2 min-1	M_2 Nm	S	i	R_{n2} N	IE2	IE3		IEC IE2	IEC IE3	
34	393	1.5	41.8	10800	**A352_41.8 S3 ME3SB4**	**A352_41.8 S3 MX3SB4**	338	**A352_41.8 P90 BE90LA4**	**A352_41.8 P90 BX90LA4**	339
36	369	1.1	39.3	6380	**A302_39.3 S3 ME3SB4**	**A302_39.3 S3 MX3SB4**	334	**A302_39.3 P90 BE90LA4**	**A302_39.3 P90 BX90LA4**	335
39	344	1.2	36.6	6330	**A302_36.6 S3 ME3SB4**	**A302_36.6 S3 MX3SB4**	334	**A302_36.6 P90 BE90LA4**	**A302_36.6 P90 BX90LA4**	335
39	344	1.7	36.6	10500	**A352_36.6 S3 ME3SB4**	**A352_36.6 S3 MX3SB4**	338	**A352_36.6 P90 BE90LA4**	**A352_36.6 P90 BX90LA4**	339
40	338	2.3	35.9	13800	**A412_35.9 S3 ME3SB4**	**A412_35.9 S3 MX3SB4**	342	**A412_35.9 P90 BE90LA4**	**A412_35.9 P90 BX90LA4**	343
43	314	1.3	33.4	6260	**A302_33.4 S3 ME3SB4**	**A302_33.4 S3 MX3SB4**	334	**A302_33.4 P90 BE90LA4**	**A302_33.4 P90 BX90LA4**	335
43	312	1.9	33.2	10300	**A352_33.2 S3 ME3SB4**	**A352_33.2 S3 MX3SB4**	338	**A352_33.2 P90 BE90LA4**	**A352_33.2 P90 BX90LA4**	339
49	275	1.5	29.3	6140	**A302_29.3 S3 ME3SB4**	**A302_29.3 S3 MX3SB4**	334	**A302_29.3 P90 BE90LA4**	**A302_29.3 P90 BX90LA4**	335
49	275	0.9	29.2	3820	**A202_29.2 S3 ME3SB4**	**A202_29.2 S3 MX3SB4**	330	**A202_29.2 P90 BE90LA4**	**A202_29.2 P90 BX90LA4**	331
50	267	2.2	28.4	9940	**A352_28.4 S3 ME3SB4**	**A352_28.4 S3 MX3SB4**	338	**A352_28.4 P90 BE90LA4**	**A352_28.4 P90 BX90LA4**	339
50	266	2.7	28.3	13000	**A412_28.3 S3 ME3SB4**	**A412_28.3 S3 MX3SB4**	342	**A412_28.3 P90 BE90LA4**	**A412_28.3 P90 BX90LA4**	343
54	249	1.6	26.5	6040	**A302_26.5 S3 ME3SB4**	**A302_26.5 S3 MX3SB4**	334	**A302_26.5 P90 BE90LA4**	**A302_26.5 P90 BX90LA4**	335
54	249	1.0	26.5	3790	**A202_26.5 S3 ME3SB4**	**A202_26.5 S3 MX3SB4**	330	**A202_26.5 P90 BE90LA4**	**A202_26.5 P90 BX90LA4**	331
56	241	2.5	25.7	9710	**A352_25.7 S3 ME3SB4**	**A352_25.7 S3 MX3SB4**	338	**A352_25.7 P90 BE90LA4**	**A352_25.7 P90 BX90LA4**	339
62	217	1.2	23.1	3760	**A202_23.1 S3 ME3SB4**	**A202_23.1 S3 MX3SB4**	330	**A202_23.1 P90 BE90LA4**	**A202_23.1 P90 BX90LA4**	331
63	214	1.9	22.8	5870	**A302_22.8 S3 ME3SB4**	**A302_22.8 S3 MX3SB4**	334	**A302_22.8 P90 BE90LA4**	**A302_22.8 P90 BX90LA4**	335
63	213	3.2	22.7	12200	**A412_22.7 S3 ME3SB4**	**A412_22.7 S3 MX3SB4**	342	**A412_22.7 P90 BE90LA4**	**A412_22.7 P90 BX90LA4**	343
64	211	2.8	22.5	9400	**A352_22.5 S3 ME3SB4**	**A352_22.5 S3 MX3SB4**	338	**A352_22.5 P90 BE90LA4**	**A352_22.5 P90 BX90LA4**	339
67	200	1.3	21.2	3730	**A202_21.2 S3 ME3SB4**	**A202_21.2 S3 MX3SB4**	330	**A202_21.2 P90 BE90LA4**	**A202_21.2 P90 BX90LA4**	331
70	193	2.1	20.5	5760	**A302_20.5 S3 ME3SB4**	**A302_20.5 S3 MX3SB4**	334	**A302_20.5 P90 BE90LA4**	**A302_20.5 P90 BX90LA4**	335
70	192	3.1	20.4	9170	**A352_20.4 S3 ME3SB4**	**A352_20.4 S3 MX3SB4**	338	**A352_20.4 P90 BE90LA4**	**A352_20.4 P90 BX90LA4**	339
79	170	1.5	18.1	3660	**A202_18.1 S3 ME3SB4**	**A202_18.1 S3 MX3SB4**	330	**A202_18.1 P90 BE90LA4**	**A202_18.1 P90 BX90LA4**	331
80	169	2.4	18.0	5600	**A302_18.0 S3 ME3SB4**	**A302_18.0 S3 MX3SB4**	334	**A302_18.0 P90 BE90LA4**	**A302_18.0 P90 BX90LA4**	335
87	155	1.0	16.4	3720	**A102_16.4 S3 ME3SB4**	**A102_16.4 S3 MX3SB4**	326	**A102_16.4 P90 BE90LA4**	**A102_16.4 P90 BX90LA4**	327
88	154	2.5	16.3	5480	**A302_16.3 S3 ME3SB4**	**A302_16.3 S3 MX3SB4**	334	**A302_16.3 P90 BE90LA4**	**A302_16.3 P90 BX90LA4**	335
88	152	1.6	16.2	3600	**A202_16.2 S3 ME3SB4**	**A202_16.2 S3 MX3SB4**	330	**A202_16.2 P90 BE90LA4**	**A202_16.2 P90 BX90LA4**	331
102	132	1.9	14.1	3530	**A202_14.1 S3 ME3SB4**	**A202_14.1 S3 MX3SB4**	330	**A202_14.1 P90 BE90LA4**	**A202_14.1 P90 BX90LA4**	331
103	131	1.1	13.9	3090	**A102_13.9 S3 ME3SB4**	**A102_13.9 S3 MX3SB4**	326	**A102_13.9 P90 BE90LA4**	**A102_13.9 P90 BX90LA4**	327
105	128	2.9	13.6	5250	**A302_13.6 S3 ME3SB4**	**A302_13.6 S3 MX3SB4**	334	**A302_13.6 P90 BE90LA4**	**A302_13.6 P90 BX90LA4**	335
116	116	1.2	12.3	3040	**A102_12.3 S3 ME3SB4**	**A102_12.3 S3 MX3SB4**	326	**A102_12.3 P90 BE90LA4**	**A102_12.3 P90 BX90LA4**	327
120	112	1.9	12.0	3420	**A202_12.0 S3 ME3SB4**	**A202_12.0 S3 MX3SB4**	330	**A202_12.0 P90 BE90LA4**	**A202_12.0 P90 BX90LA4**	331
121	111	2.7	11.8	5060	**A302_11.8 S3 ME3SB4**	**A302_11.8 S3 MX3SB4**	334	**A302_11.8 P90 BE90LA4**	**A302_11.8 P90 BX90LA4**	335
125	107	3.3	22.8	5040	**A302_22.8 S3 ME3SA2**		334	**A302_22.8 P90 BE90SA2**		335
135	99	1.5	10.6	2990	**A102_10.6 S3 ME3SB4**	**A102_10.6 S3 MX3SB4**	326	**A102_10.6 P90 BE90LA4**	**A102_10.6 P90 BX90LA4**	327
137	98	3.5	10.5	4930	**A302_10.5 S3 ME3SB4**	**A302_10.5 S3 MX3SB4**	334	**A302_10.5 P90 BE90LA4**	**A302_10.5 P90 BX90LA4**	335
138	97	2.3	10.3	3330	**A202_10.3 S3 ME3SB4**	**A202_10.3 S3 MX3SB4**	330	**A202_10.3 P90 BE90LA4**	**A202_10.3 P90 BX90LA4**	331
149	90	1.5	9.6	2940	**A102_9.6 S3 ME3SB4**	**A102_9.6 S3 MX3SB4**	326	**A102_9.6 P90 BE90LA4**	**A102_9.6 P90 BX90LA4**	327
153	88	2.4	9.4	3250	**A202_9.4 S3 ME3SB4**	**A202_9.4 S3 MX3SB4**	330	**A202_9.4 P90 BE90LA4**	**A202_9.4 P90 BX90LA4**	331
154	88	3.4	9.3	4770	**A302_9.3 S3 ME3SB4**	**A302_9.3 S3 MX3SB4**	334	**A302_9.3 P90 BE90LA4**	**A302_9.3 P90 BX90LA4**	335
168	80	1.7	8.5	3420	**A102_8.5 S3 ME3SB4**	**A102_8.5 S3 MX3SB4**	326	**A102_8.5 P90 BE90LA4**	**A102_8.5 P90 BX90LA4**	327
171	79	2.7	8.4	3180	**A202_8.4 S3 ME3SB4**	**A202_8.4 S3 MX3SB4**	330	**A202_8.4 P90 BE90LA4**	**A202_8.4 P90 BX90LA4**	331
196	69	3.1	7.3	3080	**A202_7.3 S3 ME3SB4**	**A202_7.3 S3 MX3SB4**	330	**A202_7.3 P90 BE90LA4**	**A202_7.3 P90 BX90LA4**	331
198	68	2.1	7.2	2790	**A102_7.2 S3 ME3SB4**	**A102_7.2 S3 MX3SB4**	326	**A102_7.2 P90 BE90LA4**	**A102_7.2 P90 BX90LA4**	327
219	61	3.4	6.5	3000	**A202_6.5 S3 ME3SB4**	**A202_6.5 S3 MX3SB4**	330	**A202_6.5 P90 BE90LA4**	**A202_6.5 P90 BX90LA4**	331
226	60	2.4	6.3	3220	**A102_6.3 S3 ME3SB4**	**A102_6.3 S3 MX3SB4**	326	**A102_6.3 P90 BE90LA4**	**A102_6.3 P90 BX90LA4**	327
262	51	2.7	5.5	2630	**A102_5.5 S3 ME3SB4**	**A102_5.5 S3 MX3SB4**	326	**A102_5.5 P90 BE90LA4**	**A102_5.5 P90 BX90LA4**	327
297	45	3.1	9.6	2560	**A102_9.6 S3 ME3SA2**		326	**A102_9.6 P90 BE90SA2**		327
335	40	3.5	8.5	2950	**A102_8.5 S3 ME3SA2**		326	**A102_8.5 P90 BE90SA2**		327

1.5 kW

n_2 min-1	M_2 Nm	S	i	R_{n2} N	IE3		IEC IE3	
0.88	14528	1.0	1632	75000			**A904_1632 P90 BXN90L4**	365
0.95	13410	1.0	1507	75000			**A904_1507 P90 BXN90L4**	365
1.1	11784	1.2	1324	75000			**A904_1324 P90 BXN90L4**	365
1.2	10877	1.3	1222	75000			**A904_1222 P90 BXN90L4**	365
1.3	9884	1.4	1111	75000			**A904_1111 P90 BXN90L4**	365
1.4	9124	1.5	1025	75000			**A904_1025 P90 BXN90L4**	365
1.4	8913	0.9	1001	65000			**A804_1001 P90 BXN90L4**	362
1.5	8341	1.7	937.2	75000			**A904_937.2 P90 BXN90L4**	365
1.6	7998	1.0	898.7	65000			**A804_898.7 P90 BXN90L4**	362
1.7	7699	1.8	865.1	75000			**A904_865.1 P90 BXN90L4**	365
1.7	7383	1.1	829.5	65000			**A804_829.5 P90 BXN90L4**	362

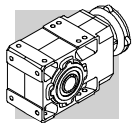

1.5 kW

n_2 min-1	M_2 Nm	S	i	R_{n2} N	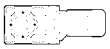 IE3		 IEC IE3	
1.9	6826	2.1	766.9	75000			**A904_766.9 P90 BXN90L4**	365
1.9	6783	1.2	762.1	65000			**A804_762.1 P90 BXN90L4**	362
2.0	6300	2.2	707.9	75000			**A904_707.9 P90 BXN90L4**	365
2.0	6261	1.3	703.5	65000			**A804_703.5 P90 BXN90L4**	362
2.2	5737	0.9	644.6	50000			**A704_644.6 P90 BXN90L4**	359
2.4	5404	1.5	607.2	65000			**A804_607.2 P90 BXN90L4**	362
2.4	5354	2.6	601.6	75000			**A904_601.6 P90 BXN90L4**	365
2.4	5296	0.9	595.0	50000			**A704_595.0 P90 BXN90L4**	359
2.6	4988	1.6	560.5	65000			**A804_560.5 P90 BXN90L4**	362
2.6	4942	2.8	555.3	75000			**A904_555.3 P90 BXN90L4**	365
2.8	4587	1.1	515.4	50000			**A704_515.4 P90 BXN90L4**	359
2.9	4331	3.2	486.6	75000			**A904_486.6 P90 BXN90L4**	365
3.0	4262	1.9	478.9	65000			**A804_478.9 P90 BXN90L4**	362
3.0	4234	1.2	475.8	50000			**A704_475.8 P90 BXN90L4**	359
3.2	3998	3.5	449.2	75000			**A904_449.2 P90 BXN90L4**	365
3.2	3935	2.0	442.1	65000			**A804_442.1 P90 BXN90L4**	362
3.6	3561	1.4	400.2	50000			**A704_400.2 P90 BXN90L4**	359
3.7	3413	2.3	383.5	65000			**A804_383.5 P90 BXN90L4**	362
3.9	3288	1.5	369.4	50000			**A704_369.4 P90 BXN90L4**	359
4.0	3150	2.5	354.0	65000			**A804_354.0 P90 BXN90L4**	362
4.1	3126	0.9	351.2	30000			**A604_351.2 P90 BXN90L4**	355
4.4	2885	1.0	324.2	30000			**A604_324.2 P90 BXN90L4**	355
4.5	2816	1.8	316.4	50000			**A704_316.4 P90 BXN90L4**	359
4.8	2673	3.0	300.4	65000			**A804_300.4 P90 BXN90L4**	362
4.9	2599	1.9	292.0	50000			**A704_292.0 P90 BXN90L4**	359
5.0	2548	1.1	286.3	30000			**A604_286.3 P90 BXN90L4**	355
5.2	2468	3.2	277.3	65000			**A804_277.3 P90 BXN90L4**	362
5.4	2352	1.2	264.3	30000			**A604_264.3 P90 BXN90L4**	355
6.0	2124	2.4	238.6	50000			**A704_238.6 P90 BXN90L4**	359
6.3	2013	1.4	226.1	30000			**A604_226.1 P90 BXN90L4**	355
6.5	1960	2.6	220.3	50000			**A704_220.3 P90 BXN90L4**	359
6.9	1858	1.5	208.7	30000			**A604_208.7 P90 BXN90L4**	355
6.9	1852	1.1	208.1	30000			**A554_208.1 P90 BXN90L4**	351
7.4	1767	1.1	194.2	30000			**A553_194.2 P90 BXN90L4**	351
7.7	1690	1.7	185.8	30000			**A603_185.8 P90 BXN90L4**	355
7.8	1637	3.1	183.9	50000			**A704_183.9 P90 BXN90L4**	359
8.2	1593	1.3	175.0	30000			**A553_175.0 P90 BXN90L4**	351
8.2	1578	1.0	173.4	20000			**A503_173.4 P90 BXN90L4**	347
8.3	1560	1.8	171.5	30000			**A603_171.5 P90 BXN90L4**	355
8.4	1511	3.3	169.8	50000			**A704_169.8 P90 BXN90L4**	359
8.9	1460	1.4	160.4	30000			**A553_160.4 P90 BXN90L4**	351
9.2	1420	2.0	156.0	30000			**A603_156.0 P90 BXN90L4**	355
9.3	1407	1.1	154.6	20000			**A503_154.6 P90 BXN90L4**	347
9.3	1399	2.9	153.7	50000			**A703_153.7 P90 BXN90L4**	359
9.7	1336	1.5	146.8	30000			**A553_146.8 P90 BXN90L4**	351
9.9	1311	2.1	144.0	30000			**A603_144.0 P90 BXN90L4**	355
10.2	1280	1.2	140.6	20000			**A503_140.6 P90 BXN90L4**	347
10.7	1213	2.3	133.3	30000			**A603_133.3 P90 BXN90L4**	355
10.8	1208	1.7	132.7	30000			**A553_132.7 P90 BXN90L4**	351
11.0	1180	1.3	129.7	20000			**A503_129.7 P90 BXN90L4**	347
11.5	1127	1.8	123.9	30000			**A553_123.9 P90 BXN90L4**	351
11.6	1120	2.5	123.0	30000			**A603_123.0 P90 BXN90L4**	355
12.1	1073	1.4	118.0	20000			**A503_118.0 P90 BXN90L4**	347
13.1	996	1.5	109.4	20000			**A503_109.4 P90 BXN90L4**	347
13.3	981	2.9	107.8	30000			**A603_107.8 P90 BXN90L4**	355
14.1	923	2.2	101.4	30000			**A553_101.4 P90 BXN90L4**	351
14.4	906	1.7	99.5	20000			**A503_99.5 P90 BXN90L4**	347
14.4	906	3.1	99.5	30000			**A603_99.5 P90 BXN90L4**	355
15.4	844	0.9	92.8	15000			**A413_92.8 P90 BXN90L4**	343
16.0	815	1.8	89.5	20000			**A503_89.5 P90 BXN90L4**	347
16.6	786	3.6	86.4	30000			**A603_86.4 P90 BXN90L4**	355
17.6	741	2.0	81.5	20000			**A503_81.5 P90 BXN90L4**	347
18.0	724	2.8	79.5	30000			**A553_79.5 P90 BXN90L4**	351
18.0	745	1.1	79.2	15000			**A412_79.2 P90 BXN90L4**	343
20.1	670	1.3	71.3	15000			**A412_71.3 P90 BXN90L4**	343
20.4	639	2.3	70.2	20000			**A503_70.2 P90 BXN90L4**	347
21.7	619	1.0	65.8	11600			**A352_65.8 P90 BXN90L4**	339

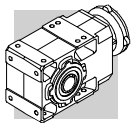

1.5 kW

n_2 min-1	M_2 Nm	S	i	R_{n2} N	IE3		IEC IE3	
22.2	585	3.4	64.3	30000			**A553_64.3 P90 BXN90L4**	351
22.3	603	1.4	64.2	15000			**A412_64.2 P90 BXN90L4**	343
22.4	581	2.6	63.9	20000			**A503_63.9 P90 BXN90L4**	347
23.7	567	1.1	60.4	11500			**A352_60.4 P90 BXN90L4**	339
24.3	553	1.5	58.8	15000			**A412_58.8 P90 BXN90L4**	343
25.2	517	2.9	56.8	20000			**A503_56.8 P90 BXN90L4**	347
26.3	510	1.2	54.3	11300			**A352_54.3 P90 BXN90L4**	339
26.9	500	1.7	53.1	15000			**A412_53.1 P90 BXN90L4**	343
27.7	470	3.2	51.7	19700			**A503_51.7 P90 BXN90L4**	347
29.1	461	1.3	49.1	11100			**A352_49.1 P90 BXN90L4**	339
29.6	454	0.9	48.3	6680			**A302_48.3 P90 BXN90L4**	335
29.6	454	1.9	48.3	14900			**A412_48.3 P90 BXN90L4**	343
31	431	1.4	45.8	11000			**A352_45.8 P90 BXN90L4**	339
32	424	2.0	45.1	14600			**A412_45.1 P90 BXN90L4**	343
33	408	1.0	43.4	6450			**A302_43.4 P90 BXN90L4**	335
34	393	1.5	41.8	10800			**A352_41.8 P90 BXN90L4**	339
36	369	1.1	39.3	6380			**A302_39.3 P90 BXN90L4**	335
39	344	1.2	36.6	6330			**A302_36.6 P90 BXN90L4**	335
39	344	1.7	36.6	10500			**A352_36.6 P90 BXN90L4**	339
40	338	2.3	35.9	13800			**A412_35.9 P90 BXN90L4**	343
43	314	1.3	33.4	6260			**A302_33.4 P90 BXN90L4**	335
43	312	1.9	33.2	10300			**A352_33.2 P90 BXN90L4**	339
49	275	1.5	29.3	6140			**A302_29.3 P90 BXN90L4**	335
49	275	0.9	29.2	3820			**A202_29.2 P90 BXN90L4**	331
50	267	2.2	28.4	9940			**A352_28.4 P90 BXN90L4**	339
50	266	2.7	28.3	13000			**A412_28.3 P90 BXN90L4**	343
54	249	1.6	26.5	6040			**A302_26.5 P90 BXN90L4**	335
54	249	1.0	26.5	3790			**A202_26.5 P90 BXN90L4**	331
56	241	2.5	25.7	9710			**A352_25.7 P90 BXN90L4**	339
62	217	1.2	23.1	3760			**A202_23.1 P90 BXN90L4**	331
63	214	1.9	22.8	5870			**A302_22.8 P90 BXN90L4**	335
63	213	3.2	22.7	12200			**A412_22.7 P90 BXN90L4**	343
64	211	2.8	22.5	9400			**A352_22.5 P90 BXN90L4**	339
67	200	1.3	21.2	3730			**A202_21.2 P90 BXN90L4**	331
70	193	2.1	20.5	5760			**A302_20.5 P90 BXN90L4**	335
70	192	3.1	20.4	9170			**A352_20.4 P90 BXN90L4**	339
79	170	1.5	18.1	3660			**A202_18.1 P90 BXN90L4**	331
80	169	2.4	18.0	5600			**A302_18.0 P90 BXN90L4**	335
87	155	1.0	16.4	3720			**A102_16.4 P90 BXN90L4**	327
88	154	2.5	16.3	5480			**A302_16.3 P90 BXN90L4**	335
88	152	1.6	16.2	3600			**A202_16.2 P90 BXN90L4**	331
102	132	1.9	14.1	3530			**A202_14.1 P90 BXN90L4**	331
103	131	1.1	13.9	3090			**A102_13.9 P90 BXN90L4**	327
105	128	2.9	13.6	5250			**A302_13.6 P90 BXN90L4**	335
116	116	1.2	12.3	3040			**A102_12.3 P90 BXN90L4**	327
120	112	1.9	12.0	3420			**A202_12.0 P90 BXN90L4**	331
121	111	2.7	11.8	5060			**A302_11.8 P90 BXN90L4**	335
125	107	3.3	22.8	5040				
135	99	1.5	10.6	2990			**A102_10.6 P90 BXN90L4**	327
137	98	3.5	10.5	4930			**A302_10.5 P90 BXN90L4**	335
138	97	2.3	10.3	3330			**A202_10.3 P90 BXN90L4**	331
149	90	1.5	9.6	2940			**A102_9.6 P90 BXN90L4**	327
153	88	2.4	9.4	3250			**A202_9.4 P90 BXN90L4**	331
154	88	3.4	9.3	4770			**A302_9.3 P90 BXN90L4**	335
168	80	1.7	8.5	3420			**A102_8.5 P90 BXN90L4**	327
171	79	2.7	8.4	3180			**A202_8.4 P90 BXN90L4**	331
196	69	3.1	7.3	3080			**A202_7.3 P90 BXN90L4**	331
198	68	2.1	7.2	2790			**A102_7.2 P90 BXN90L4**	327
219	61	3.4	6.5	3000			**A202_6.5 P90 BXN90L4**	331
226	60	2.4	6.3	3220			**A102_6.3 P90 BXN90L4**	327
262	51	2.7	5.5	2630			**A102_5.5 P90 BXN90L4**	327

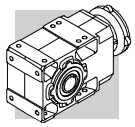

2.2 kW

n_2 min-1	M_2 Nm	S	i	R_{n2} N	IE2	IE3		IEC IE2	IEC IE3	
1.2	15990	0.9	1222	75000	**A904_1222 S3 ME3LA4**	**A904_1222 S3 MX3LA4**	364	**A904_1222 P100 BE100LA4**	**A904_1222 P100 BX100LA4**	365
1.3	14530	1.0	1111	75000	**A904_1111 S3 ME3LA4**	**A904_1111 S3 MX3LA4**	364	**A904_1111 P100 BE100LA4**	**A904_1111 P100 BX100LA4**	365
1.4	13412	1.0	1025	75000	**A904_1025 S3 ME3LA4**	**A904_1025 S3 MX3LA4**	364	**A904_1025 P100 BE100LA4**	**A904_1025 P100 BX100LA4**	365
1.5	12261	1.1	937.2	75000	**A904_937.2 S3 ME3LA4**	**A904_937.2 S3 MX3LA4**	364	**A904_937.2 P100 BE100LA4**	**A904_937.2 P100 BX100LA4**	365
1.7	11318	1.2	865.1	75000	**A904_865.1 S3 ME3LA4**	**A904_865.1 S3 MX3LA4**	364	**A904_865.1 P100 BE100LA4**	**A904_865.1 P100 BX100LA4**	365
1.9	10034	1.4	766.9	75000	**A904_766.9 S3 ME3LA4**	**A904_766.9 S3 MX3LA4**	364	**A904_766.9 P100 BE100LA4**	**A904_766.9 P100 BX100LA4**	365
2.0	9262	1.5	707.9	75000	**A904_707.9 S3 ME3LA4**	**A904_707.9 S3 MX3LA4**	364	**A904_707.9 P100 BE100LA4**	**A904_707.9 P100 BX100LA4**	365
2.0	9203	0.9	703.5	65000	**A804_703.5 S3 ME3LA4**	**A804_703.5 S3 MX3LA4**	361	**A804_703.5 P100 BE100LA4**	**A804_703.5 P100 BX100LA4**	362
2.4	7943	1.0	607.2	65000	**A804_607.2 S3 ME3LA4**	**A804_607.2 S3 MX3LA4**	361	**A804_607.2 P100 BE100LA4**	**A804_607.2 P100 BX100LA4**	362
2.4	7870	1.8	601.6	75000	**A904_601.6 S3 ME3LA4**	**A904_601.6 S3 MX3LA4**	364	**A904_601.6 P100 BE100LA4**	**A904_601.6 P100 BX100LA4**	365
2.6	7332	1.1	560.5	65000	**A804_560.5 S3 ME3LA4**	**A804_560.5 S3 MX3LA4**	361	**A804_560.5 P100 BE100LA4**	**A804_560.5 P100 BX100LA4**	362
2.6	7265	1.9	555.3	75000	**A904_555.3 S3 ME3LA4**	**A904_555.3 S3 MX3LA4**	364	**A904_555.3 P100 BE100LA4**	**A904_555.3 P100 BX100LA4**	365
2.9	6366	2.2	486.6	75000	**A904_486.6 S3 ME3LA4**	**A904_486.6 S3 MX3LA4**	364	**A904_486.6 P100 BE100LA4**	**A904_486.6 P100 BX100LA4**	365
3.0	6266	1.3	478.9	65000	**A804_478.9 S3 ME3LA4**	**A804_478.9 S3 MX3LA4**	361	**A804_478.9 P100 BE100LA4**	**A804_478.9 P100 BX100LA4**	362
3.2	5876	2.4	449.2	75000	**A904_449.2 S3 ME3LA4**	**A904_449.2 S3 MX3LA4**	364	**A904_449.2 P100 BE100LA4**	**A904_449.2 P100 BX100LA4**	365
3.2	5784	1.4	442.1	65000	**A804_442.1 S3 ME3LA4**	**A804_442.1 S3 MX3LA4**	361	**A804_442.1 P100 BE100LA4**	**A804_442.1 P100 BX100LA4**	362
3.6	5235	1.0	400.2	50000	**A704_400.2 S3 ME3LA4**	**A704_400.2 S3 MX3LA4**	358	**A704_400.2 P100 BE100LA4**	**A704_400.2 P100 BX100LA4**	359
3.7	5043	2.8	385.4	75000	**A904_385.4 S3 ME3LA4**	**A904_385.4 S3 MX3LA4**	364	**A904_385.4 P100 BE100LA4**	**A904_385.4 P100 BX100LA4**	365
3.7	5017	1.6	383.5	65000	**A804_383.5 S3 ME3LA4**	**A804_383.5 S3 MX3LA4**	361	**A804_383.5 P100 BE100LA4**	**A804_383.5 P100 BX100LA4**	362
3.9	4833	1.0	369.4	50000	**A704_369.4 S3 ME3LA4**	**A704_369.4 S3 MX3LA4**	358	**A704_369.4 P100 BE100LA4**	**A704_369.4 P100 BX100LA4**	359
4.0	4655	3.0	355.8	75000	**A904_355.8 S3 ME3LA4**	**A904_355.8 S3 MX3LA4**	364	**A904_355.8 P100 BE100LA4**	**A904_355.8 P100 BX100LA4**	365
4.0	4631	1.7	354.0	65000	**A804_354.0 S3 ME3LA4**	**A804_354.0 S3 MX3LA4**	361	**A804_354.0 P100 BE100LA4**	**A804_354.0 P100 BX100LA4**	362
4.5	4139	1.2	316.4	50000	**A704_316.4 S3 ME3LA4**	**A704_316.4 S3 MX3LA4**	358	**A704_316.4 P100 BE100LA4**	**A704_316.4 P100 BX100LA4**	359
4.7	3989	3.5	304.9	75000	**A904_304.9 S3 ME3LA4**	**A904_304.9 S3 MX3LA4**	364	**A904_304.9 P100 BE100LA4**	**A904_304.9 P100 BX100LA4**	365
4.8	3930	2.0	300.4	65000	**A804_300.4 S3 ME3LA4**	**A804_300.4 S3 MX3LA4**	361	**A804_300.4 P100 BE100LA4**	**A804_300.4 P100 BX100LA4**	362
4.9	3820	1.3	292.0	50000	**A704_292.0 S3 ME3LA4**	**A704_292.0 S3 MX3LA4**	358	**A704_292.0 P100 BE100LA4**	**A704_292.0 P100 BX100LA4**	359
5.2	3628	2.2	277.3	65000	**A804_277.3 S3 ME3LA4**	**A804_277.3 S3 MX3LA4**	361	**A804_277.3 P100 BE100LA4**	**A804_277.3 P100 BX100LA4**	362
6.0	3122	1.6	238.6	50000	**A704_238.6 S3 ME3LA4**	**A704_238.6 S3 MX3LA4**	358	**A704_238.6 P100 BE100LA4**	**A704_238.6 P100 BX100LA4**	359
6.1	3043	2.6	232.6	65000	**A804_232.6 S3 ME3LA4**	**A804_232.6 S3 MX3LA4**	361	**A804_232.6 P100 BE100LA4**	**A804_232.6 P100 BX100LA4**	362
6.3	2958	0.9	226.1	30000	**A604_226.1 S3 ME3LA4**	**A604_226.1 S3 MX3LA4**	354	**A604_226.1 P100 BE100LA4**	**A604_226.1 P100 BX100LA4**	355
6.5	2882	1.7	220.3	50000	**A704_220.3 S3 ME3LA4**	**A704_220.3 S3 MX3LA4**	358	**A704_220.3 P100 BE100LA4**	**A704_220.3 P100 BX100LA4**	359
6.7	2809	2.8	214.7	65000	**A804_214.7 S3 ME3LA4**	**A804_214.7 S3 MX3LA4**	361	**A804_214.7 P100 BE100LA4**	**A804_214.7 P100 BX100LA4**	362
6.9	2731	1.0	208.7	30000	**A604_208.7 S3 ME3LA4**	**A604_208.7 S3 MX3LA4**	354	**A604_208.7 P100 BE100LA4**	**A604_208.7 P100 BX100LA4**	355
7.7	2485	1.1	185.8	30000	**A603_185.8 S3 ME3LA4**	**A603_185.8 S3 MX3LA4**	354	**A603_185.8 P100 BE100LA4**	**A603_185.8 P100 BX100LA4**	355
7.8	2406	2.1	183.9	50000	**A704_183.9 S3 ME3LA4**	**A704_183.9 S3 MX3LA4**	358	**A704_183.9 P100 BE100LA4**	**A704_183.9 P100 BX100LA4**	359
8.3	2294	1.2	171.5	30000	**A603_171.5 S3 ME3LA4**	**A603_171.5 S3 MX3LA4**	354	**A603_171.5 P100 BE100LA4**	**A603_171.5 P100 BX100LA4**	355
8.3	2241	3.6	171.3	65000	**A804_171.3 S3 ME3LA4**	**A804_171.3 S3 MX3LA4**	361	**A804_171.3 P100 BE100LA4**	**A804_171.3 P100 BX100LA4**	362
8.4	2221	2.3	169.8	50000	**A704_169.8 S3 ME3LA4**	**A704_169.8 S3 MX3LA4**	358	**A704_169.8 P100 BE100LA4**	**A704_169.8 P100 BX100LA4**	359
8.9	2146	0.9	160.4	30000	**A553_160.4 S3 ME3LA4**	**A553_160.4 S3 MX3LA4**	350	**A553_160.4 P100 BE100LA4**	**A553_160.4 P100 BX100LA4**	351
9.2	2087	1.3	156.0	30000	**A603_156.0 S3 ME3LA4**	**A603_156.0 S3 MX3LA4**	354	**A603_156.0 P100 BE100LA4**	**A603_156.0 P100 BX100LA4**	355
9.3	2056	2.0	153.7	50000	**A703_153.7 S3 ME3LA4**	**A703_153.7 S3 MX3LA4**	358	**A703_153.7 P100 BE100LA4**	**A703_153.7 P100 BX100LA4**	359
9.7	1964	1.0	146.8	30000	**A553_146.8 S3 ME3LA4**	**A553_146.8 S3 MX3LA4**	350	**A553_146.8 P100 BE100LA4**	**A553_146.8 P100 BX100LA4**	351
9.9	1927	1.5	144.0	30000	**A603_144.0 S3 ME3LA4**	**A603_144.0 S3 MX3LA4**	354	**A603_144.0 P100 BE100LA4**	**A603_144.0 P100 BX100LA4**	355
10.1	1898	2.6	141.9	50000	**A703_141.9 S3 ME3LA4**	**A703_141.9 S3 MX3LA4**	358	**A703_141.9 P100 BE100LA4**	**A703_141.9 P100 BX100LA4**	359
10.7	1783	1.6	133.3	30000	**A603_133.3 S3 ME3LA4**	**A603_133.3 S3 MX3LA4**	354	**A603_133.3 P100 BE100LA4**	**A603_133.3 P100 BX100LA4**	355
10.8	1776	1.1	132.7	30000	**A553_132.7 S3 ME3LA4**	**A553_132.7 S3 MX3LA4**	350	**A553_132.7 P100 BE100LA4**	**A553_132.7 P100 BX100LA4**	351
10.9	1748	2.9	130.7	50000	**A703_130.7 S3 ME3LA4**	**A703_130.7 S3 MX3LA4**	358	**A703_130.7 P100 BE100LA4**	**A703_130.7 P100 BX100LA4**	359
11.5	1657	1.2	123.9	30000	**A553_123.9 S3 ME3LA4**	**A553_123.9 S3 MX3LA4**	350	**A553_123.9 P100 BE100LA4**	**A553_123.9 P100 BX100LA4**	351
11.6	1646	1.7	123.0	30000	**A603_123.0 S3 ME3LA4**	**A603_123.0 S3 MX3LA4**	354	**A603_123.0 P100 BE100LA4**	**A603_123.0 P100 BX100LA4**	355
11.9	1613	3.1	120.6	50000	**A703_120.6 S3 ME3LA4**	**A703_120.6 S3 MX3LA4**	358	**A703_120.6 P100 BE100LA4**	**A703_120.6 P100 BX100LA4**	359
12.1	1578	1.0	118.0	20000	**A503_118.0 S3 ME3LA4**	**A503_118.0 S3 MX3LA4**	346	**A503_118.0 P100 BE100LA4**	**A503_118.0 P100 BX100LA4**	347
13.1	1464	1.0	109.4	20000	**A503_109.4 S3 ME3LA4**	**A503_109.4 S3 MX3LA4**	346	**A503_109.4 P100 BE100LA4**	**A503_109.4 P100 BX100LA4**	347
13.3	1442	1.9	107.8	30000	**A603_107.8 S3 ME3LA4**	**A603_107.8 S3 MX3LA4**	354	**A603_107.8 P100 BE100LA4**	**A603_107.8 P100 BX100LA4**	355
13.7	1394	3.6	104.2	50000	**A703_104.2 S3 ME3LA4**	**A703_104.2 S3 MX3LA4**	358	**A703_104.2 P100 BE100LA4**	**A703_104.2 P100 BX100LA4**	359
14.1	1356	1.5	101.4	30000	**A553_101.4 S3 ME3LA4**	**A553_101.4 S3 MX3LA4**	350	**A553_101.4 P100 BE100LA4**	**A553_101.4 P100 BX100LA4**	351
14.4	1331	1.1	99.5	20000	**A503_99.5 S3 ME3LA4**	**A503_99.5 S3 MX3LA4**	346	**A503_99.5 P100 BE100LA4**	**A503_99.5 P100 BX100LA4**	347
14.4	1331	2.1	99.5	30000	**A603_99.5 S3 ME3LA4**	**A603_99.5 S3 MX3LA4**	354	**A603_99.5 P100 BE100LA4**	**A603_99.5 P100 BX100LA4**	355

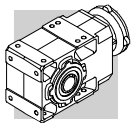

2.2 kW

n_2 min-1	M_2 Nm	S	i	R_{n2} N	IE2	IE3		IEC IE2	IEC IE3	
16.0	1198	1.3	89.5	19800	**A503_89.5 S3 ME3LA4**	**A503_89.5 S3 MX3LA4**	346	**A503_89.5 P100 BE100LA4**	**A503_89.5 P100 BX100LA4**	347
16.6	1155	2.4	86.4	30000	**A603_86.4 S3 ME3LA4**	**A603_86.4 S3 MX3LA4**	354	**A603_86.4 P100 BE100LA4**	**A603_86.4 P100 BX100LA4**	355
17.6	1090	1.4	81.5	19600	**A503_81.5 S3 ME3LA4**	**A503_81.5 S3 MX3LA4**	346	**A503_81.5 P100 BE100LA4**	**A503_81.5 P100 BX100LA4**	347
17.9	1066	2.6	79.7	30000	**A603_79.7 S3 ME3LA4**	**A603_79.7 S3 MX3LA4**	354	**A603_79.7 P100 BE100LA4**	**A603_79.7 P100 BX100LA4**	355
18.0	1064	1.9	79.5	30000	**A553_79.5 S3 ME3LA4**	**A553_79.5 S3 MX3LA4**	350	**A553_79.5 P100 BE100LA4**	**A553_79.5 P100 BX100LA4**	351
20.3	942	3.0	70.4	30000	**A603_70.4 S3 ME3LA4**	**A603_70.4 S3 MX3LA4**	354	**A603_70.4 P100 BE100LA4**	**A603_70.4 P100 BX100LA4**	355
20.4	940	1.6	70.2	19300	**A503_70.2 S3 ME3LA4**	**A503_70.2 S3 MX3LA4**	346	**A503_70.2 P100 BE100LA4**	**A503_70.2 P100 BX100LA4**	347
22.0	869	3.2	65.0	30000	**A603_65.0 S3 ME3LA4**	**A603_65.0 S3 MX3LA4**	354	**A603_65.0 P100 BE100LA4**	**A603_65.0 P100 BX100LA4**	355
22.2	860	2.3	64.3	30000	**A553_64.3 S3 ME3LA4**	**A553_64.3 S3 MX3LA4**	350	**A553_64.3 P100 BE100LA4**	**A553_64.3 P100 BX100LA4**	351
22.3	887	1.0	64.2	14500	**A412_64.2 S3 ME3LA4**	**A412_64.2 S3 MX3LA4**	342	**A412_64.2 P100 BE100LA4**	**A412_64.2 P100 BX100LA4**	343
22.4	855	1.8	63.9	19000	**A503_63.9 S3 ME3LA4**	**A503_63.9 S3 MX3LA4**	346	**A503_63.9 P100 BE100LA4**	**A503_63.9 P100 BX100LA4**	347
24.3	813	1.0	58.8	14400	**A412_58.8 S3 ME3LA4**	**A412_58.8 S3 MX3LA4**	342	**A412_58.8 P100 BE100LA4**	**A412_58.8 P100 BX100LA4**	343
25.2	760	2.0	56.8	18600	**A503_56.8 S3 ME3LA4**	**A503_56.8 S3 MX3LA4**	346	**A503_56.8 P100 BE100LA4**	**A503_56.8 P100 BX100LA4**	347
26.9	734	1.2	53.1	14100	**A412_53.1 S3 ME3LA4**	**A412_53.1 S3 MX3LA4**	342	**A412_53.1 P100 BE100LA4**	**A412_53.1 P100 BX100LA4**	343
27.7	691	2.2	51.7	18300	**A503_51.7 S3 ME3LA4**	**A503_51.7 S3 MX3LA4**	346	**A503_51.7 P100 BE100LA4**	**A503_51.7 P100 BX100LA4**	347
28.1	682	2.9	51.0	30000	**A553_51.0 S3 ME3LA4**	**A553_51.0 S3 MX3LA4**	350	**A553_51.0 P100 BE100LA4**	**A553_51.0 P100 BX100LA4**	351
29.1	678	0.9	49.1	9900	**A352_49.1 S3 ME3LA4**	**A352_49.1 S3 MX3LA4**	338	**A352_49.1 P100 BE100LA4**	**A352_49.1 P100 BX100LA4**	339
29.6	667	1.3	48.3	13900	**A412_48.3 S3 ME3LA4**	**A412_48.3 S3 MX3LA4**	342	**A412_48.3 P100 BE100LA4**	**A412_48.3 P100 BX100LA4**	343
31	633	0.9	45.8	9840	**A352_45.8 S3 ME3LA4**	**A352_45.8 S3 MX3LA4**	338	**A352_45.8 P100 BE100LA4**	**A352_45.8 P100 BX100LA4**	339
32	623	1.3	45.1	13700	**A412_45.1 S3 ME3LA4**	**A412_45.1 S3 MX3LA4**	342	**A412_45.1 P100 BE100LA4**	**A412_45.1 P100 BX100LA4**	343
32	602	2.5	45.0	17900	**A503_45.0 S3 ME3LA4**	**A503_45.0 S3 MX3LA4**	346	**A503_45.0 P100 BE100LA4**	**A503_45.0 P100 BX100LA4**	347
34	577	1.0	41.8	9750	**A352_41.8 S3 ME3LA4**	**A352_41.8 S3 MX3LA4**	338	**A352_41.8 P100 BE100LA4**	**A352_41.8 P100 BX100LA4**	339
35	548	2.7	40.9	17500	**A503_40.9 S3 ME3LA4**	**A503_40.9 S3 MX3LA4**	346	**A503_40.9 P100 BE100LA4**	**A503_40.9 P100 BX100LA4**	347
39	506	1.2	36.6	9600	**A352_36.6 S3 ME3LA4**	**A352_36.6 S3 MX3LA4**	338	**A352_36.6 P100 BE100LA4**	**A352_36.6 P100 BX100LA4**	339
40	496	1.6	35.9	13100	**A412_35.9 S3 ME3LA4**	**A412_35.9 S3 MX3LA4**	342	**A412_35.9 P100 BE100LA4**	**A412_35.9 P100 BX100LA4**	343
40	476	3.1	35.6	17000	**A503_35.6 S3 ME3LA4**	**A503_35.6 S3 MX3LA4**	346	**A503_35.6 P100 BE100LA4**	**A503_35.6 P100 BX100LA4**	347
43	462	0.9	33.4	5050	**A302_33.4 S3 ME3LA4**	**A302_33.4 S3 MX3LA4**	334	**A302_33.4 P100 BE100LA4**	**A302_33.4 P100 BX100LA4**	335
43	458	1.3	33.2	9460	**A352_33.2 S3 ME3LA4**	**A352_33.2 S3 MX3LA4**	338	**A352_33.2 P100 BE100LA4**	**A352_33.2 P100 BX100LA4**	339
44	433	3.5	32.4	16600	**A503_32.4 S3 ME3LA4**	**A503_32.4 S3 MX3LA4**	346	**A503_32.4 P100 BE100LA4**	**A503_32.4 P100 BX100LA4**	347
49	405	1.0	29.3	5380	**A302_29.3 S3 ME3LA4**	**A302_29.3 S3 MX3LA4**	334	**A302_29.3 P100 BE100LA4**	**A302_29.3 P100 BX100LA4**	335
50	393	1.5	28.4	9230	**A352_28.4 S3 ME3LA4**	**A352_28.4 S3 MX3LA4**	338	**A352_28.4 P100 BE100LA4**	**A352_28.4 P100 BX100LA4**	339
50	391	1.9	28.3	12400	**A412_28.3 S3 ME3LA4**	**A412_28.3 S3 MX3LA4**	342	**A412_28.3 P100 BE100LA4**	**A412_28.3 P100 BX100LA4**	343
54	367	1.1	26.5	5350	**A302_26.5 S3 ME3LA4**	**A302_26.5 S3 MX3LA4**	334	**A302_26.5 P100 BE100LA4**	**A302_26.5 P100 BX100LA4**	335
56	355	1.7	25.7	9070	**A352_25.7 S3 ME3LA4**	**A352_25.7 S3 MX3LA4**	338	**A352_25.7 P100 BE100LA4**	**A352_25.7 P100 BX100LA4**	339
63	314	1.3	22.8	5290	**A302_22.8 S3 ME3LA4**	**A302_22.8 S3 MX3LA4**	334	**A302_22.8 P100 BE100LA4**	**A302_22.8 P100 BX100LA4**	335
63	313	2.2	22.7	11700	**A412_22.7 S3 ME3LA4**	**A412_22.7 S3 MX3LA4**	342	**A412_22.7 P100 BE100LA4**	**A412_22.7 P100 BX100LA4**	343
64	311	1.9	22.5	8840	**A352_22.5 S3 ME3LA4**	**A352_22.5 S3 MX3LA4**	338	**A352_22.5 P100 BE100LA4**	**A352_22.5 P100 BX100LA4**	339
70	284	1.4	20.5	5230	**A302_20.5 S3 ME3LA4**	**A302_20.5 S3 MX3LA4**	334	**A302_20.5 P100 BE100LA4**	**A302_20.5 P100 BX100LA4**	335
70	282	2.1	20.4	8660	**A352_20.4 S3 ME3LA4**	**A352_20.4 S3 MX3LA4**	338	**A352_20.4 P100 BE100LA4**	**A352_20.4 P100 BX100LA4**	339
79	250	1.0	18.1	3140	**A202_18.1 S3 ME3LA4**	**A202_18.1 S3 MX3LA4**	330	**A202_18.1 P100 BE100LA4**	**A202_18.1 P100 BX100LA4**	331
80	249	1.6	18.0	5140	**A302_18.0 S3 ME3LA4**	**A302_18.0 S3 MX3LA4**	334	**A302_18.0 P100 BE100LA4**	**A302_18.0 P100 BX100LA4**	335
81	245	2.6	17.8	11000	**A412_17.8 S3 ME3LA4**	**A412_17.8 S3 MX3LA4**	342	**A412_17.8 P100 BE100LA4**	**A412_17.8 P100 BX100LA4**	343
84	234	2.6	17.0	8320	**A352_17.0 S3 ME3LA4**	**A352_17.0 S3 MX3LA4**	338	**A352_17.0 P100 BE100LA4**	**A352_17.0 P100 BX100LA4**	339
88	226	1.7	16.3	5060	**A302_16.3 S3 ME3LA4**	**A302_16.3 S3 MX3LA4**	334	**A302_16.3 P100 BE100LA4**	**A302_16.3 P100 BX100LA4**	335
88	223	1.1	16.2	3140	**A202_16.2 S3 ME3LA4**	**A202_16.2 S3 MX3LA4**	330	**A202_16.2 P100 BE100LA4**	**A202_16.2 P100 BX100LA4**	331
89	222	2.7	16.1	10800	**A412_16.1 S3 ME3LA4**	**A412_16.1 S3 MX3LA4**	342	**A412_16.1 P100 BE100LA4**	**A412_16.1 P100 BX100LA4**	343
92	214	2.8	15.5	8150	**A352_15.5 S3 ME3LA4**	**A352_15.5 S3 MX3LA4**	338	**A352_15.5 P100 BE100LA4**	**A352_15.5 P100 BX100LA4**	339
102	194	1.3	14.1	3120	**A202_14.1 S3 ME3LA4**	**A202_14.1 S3 MX3LA4**	330	**A202_14.1 P100 BE100LA4**	**A202_14.1 P100 BX100LA4**	331
104	190	3.1	13.8	10300	**A412_13.8 S3 ME3LA4**	**A412_13.8 S3 MX3LA4**	342	**A412_13.8 P100 BE100LA4**	**A412_13.8 P100 BX100LA4**	343
105	187	2.0	13.6	4900	**A302_13.6 S3 ME3LA4**	**A302_13.6 S3 MX3LA4**	334	**A302_13.6 P100 BE100LA4**	**A302_13.6 P100 BX100LA4**	335
109	181	3.3	13.1	7820	**A352_13.1 S3 ME3LA4**	**A352_13.1 S3 MX3LA4**	338	**A352_13.1 P100 BE100LA4**	**A352_13.1 P100 BX100LA4**	339
120	165	1.3	12.0	3070	**A202_12.0 S3 ME3LA4**	**A202_12.0 S3 MX3LA4**	330	**A202_12.0 P100 BE100LA4**	**A202_12.0 P100 BX100LA4**	331
121	163	1.8	11.8	4750	**A302_11.8 S3 ME3LA4**	**A302_11.8 S3 MX3LA4**	334	**A302_11.8 P100 BE100LA4**	**A302_11.8 P100 BX100LA4**	335
121	163	2.5	11.8	7710	**A352_11.8 S3 ME3LA4**	**A352_11.8 S3 MX3LA4**	338	**A352_11.8 P100 BE100LA4**	**A352_11.8 P100 BX100LA4**	339
122	162	3.4	11.7	9870	**A412_11.7 S3 ME3LA4**	**A412_11.7 S3 MX3LA4**	342	**A412_11.7 P100 BE100LA4**	**A412_11.7 P100 BX100LA4**	343
124	159	2.0	23.1	3070	**A202_23.1 S3 ME3LA2**		330	**A202_23.1 P90 BE90L2**		331
134	147	2.7	10.6	7510	**A352_10.6 S3 ME3LA4**	**A352_10.6 S3 MX3LA4**	338	**A352_10.6 P100 BE100LA4**	**A352_10.6 P100 BX100LA4**	339

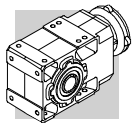

2.2 kW

n_2 min-1	M_2 Nm	S	i	R_{n2} N	IE2	IE3		IEC IE2	IEC IE3	
135	146	1.0	10.6	2600	**A102_10.6 S3 ME3LA4**	**A102_10.6 S3 MX3LA4**	326	**A102_10.6 P100 BE100LA4**	**A102_10.6 P100 BX100LA4**	327
137	144	2.4	10.5	4660	**A302_10.5 S3 ME3LA4**	**A302_10.5 S3 MX3LA4**	334	**A302_10.5 P100 BE100LA4**	**A302_10.5 P100 BX100LA4**	335
138	143	1.6	10.3	3030	**A202_10.3 S3 ME3LA4**	**A202_10.3 S3 MX3LA4**	330	**A202_10.3 P100 BE100LA4**	**A202_10.3 P100 BX100LA4**	331
149	133	1.1	9.6	2580	**A102_9.6 S3 ME3LA4**	**A102_9.6 S3 MX3LA4**	326	**A102_9.6 P100 BE100LA4**	**A102_9.6 P100 BX100LA4**	327
153	130	1.6	9.4	2980	**A202_9.4 S3 ME3LA4**	**A202_9.4 S3 MX3LA4**	330	**A202_9.4 P100 BE100LA4**	**A202_9.4 P100 BX100LA4**	331
154	129	2.3	9.3	4530	**A302_9.3 S3 ME3LA4**	**A302_9.3 S3 MX3LA4**	334	**A302_9.3 P100 BE100LA4**	**A302_9.3 P100 BX100LA4**	335
154	129	3.1	9.3	7240	**A352_9.3 S3 ME3LA4**	**A352_9.3 S3 MX3LA4**	338	**A352_9.3 P100 BE100LA4**	**A352_9.3 P100 BX100LA4**	339
168	118	1.2	8.5	3050	**A102_8.5 S3 ME3LA4**	**A102_8.5 S3 MX3LA4**	326	**A102_8.5 P100 BE100LA4**	**A102_8.5 P100 BX100LA4**	327
169	117	2.6	8.5	4430	**A302_8.5 S3 ME3LA4**	**A302_8.5 S3 MX3LA4**	334	**A302_8.5 P100 BE100LA4**	**A302_8.5 P100 BX100LA4**	335
169	117	3.3	8.5	7060	**A352_8.5 S3 ME3LA4**	**A352_8.5 S3 MX3LA4**	338	**A352_8.5 P100 BE100LA4**	**A352_8.5 P100 BX100LA4**	339
171	116	1.8	8.4	2930	**A202_8.4 S3 ME3LA4**	**A202_8.4 S3 MX3LA4**	330	**A202_8.4 P100 BE100LA4**	**A202_8.4 P100 BX100LA4**	331
196	101	2.1	7.3	2860	**A202_7.3 S3 ME3LA4**	**A202_7.3 S3 MX3LA4**	330	**A202_7.3 P100 BE100LA4**	**A202_7.3 P100 BX100LA4**	331
198	100	1.4	7.2	2520	**A102_7.2 S3 ME3LA4**	**A102_7.2 S3 MX3LA4**	326	**A102_7.2 P100 BE100LA4**	**A102_7.2 P100 BX100LA4**	327
204	97	3.1	7.0	4240	**A302_7.0 S3 ME3LA4**	**A302_7.0 S3 MX3LA4**	334	**A302_7.0 P100 BE100LA4**	**A302_7.0 P100 BX100LA4**	335
219	90	2.3	6.5	2810	**A202_6.5 S3 ME3LA4**	**A202_6.5 S3 MX3LA4**	330	**A202_6.5 P100 BE100LA4**	**A202_6.5 P100 BX100LA4**	331
223	89	3.4	6.4	4150	**A302_6.4 S3 ME3LA4**	**A302_6.4 S3 MX3LA4**	334	**A302_6.4 P100 BE100LA4**	**A302_6.4 P100 BX100LA4**	335
226	88	1.6	6.3	2950	**A102_6.3 S3 ME3LA4**	**A102_6.3 S3 MX3LA4**	326	**A102_6.3 P100 BE100LA4**	**A102_6.3 P100 BX100LA4**	327
262	76	1.9	5.5	2430	**A102_5.5 S3 ME3LA4**	**A102_5.5 S3 MX3LA4**	326	**A102_5.5 P100 BE100LA4**	**A102_5.5 P100 BX100LA4**	327
267	74	2.8	5.4	2700	**A202_5.4 S3 ME3LA4**	**A202_5.4 S3 MX3LA4**	330	**A202_5.4 P100 BE100LA4**	**A202_5.4 P100 BX100LA4**	331
306	65	3.2	9.4	2620	**A202_9.4 S3 ME3LA2**		330	**A202_9.4 P90 BE90L2**		331

2.2 kW

n_2 min-1	M_2 Nm	S	i	R_{n2} N	IE3		IEC IE3	
1.2	15990	0.9	1222	75000			**A904_1222 P100 BXN100LA4**	365
1.3	14530	1.0	1111	75000			**A904_1111 P100 BXN100LA4**	365
1.4	13412	1.0	1025	75000			**A904_1025 P100 BXN100LA4**	365
1.5	12261	1.1	937.2	75000			**A904_937.2 P100 BXN100LA4**	365
1.7	11318	1.2	865.1	75000			**A904_865.1 P100 BXN100LA4**	365
1.9	10034	1.4	766.9	75000			**A904_766.9 P100 BXN100LA4**	365
2.0	9262	1.5	707.9	75000			**A904_707.9 P100 BXN100LA4**	365
2.0	9203	0.9	703.5	65000			**A804_703.5 P100 BXN100LA4**	362
2.4	7943	1.0	607.2	65000			**A804_607.2 P100 BXN100LA4**	362
2.4	7870	1.8	601.6	75000			**A904_601.6 P100 BXN100LA4**	365
2.6	7332	1.1	560.5	65000			**A804_560.5 P100 BXN100LA4**	362
2.6	7265	1.9	555.3	75000			**A904_555.3 P100 BXN100LA4**	365
2.9	6366	2.2	486.6	75000			**A904_486.6 P100 BXN100LA4**	365
3.0	6266	1.3	478.9	65000			**A804_478.9 P100 BXN100LA4**	362
3.2	5876	2.4	449.2	75000			**A904_449.2 P100 BXN100LA4**	365
3.2	5784	1.4	442.1	65000			**A804_442.1 P100 BXN100LA4**	362
3.6	5235	1.0	400.2	50000			**A704_400.2 P100 BXN100LA4**	359
3.7	5043	2.8	385.4	75000			**A904_385.4 P100 BXN100LA4**	365
3.7	5017	1.6	383.5	65000			**A804_383.5 P100 BXN100LA4**	362
3.9	4833	1.0	369.4	50000			**A704_369.4 P100 BXN100LA4**	359
4.0	4655	3.0	355.8	75000			**A904_355.8 P100 BXN100LA4**	365
4.0	4631	1.7	354.0	65000			**A804_354.0 P100 BXN100LA4**	362
4.5	4139	1.2	316.4	50000			**A704_316.4 P100 BXN100LA4**	359
4.7	3989	3.5	304.9	75000			**A904_304.9 P100 BXN100LA4**	365
4.8	3930	2.0	300.4	65000			**A804_300.4 P100 BXN100LA4**	362
4.9	3820	1.3	292.0	50000			**A704_292.0 P100 BXN100LA4**	359
5.2	3628	2.2	277.3	65000			**A804_277.3 P100 BXN100LA4**	362
6.0	3122	1.6	238.6	50000			**A704_238.6 P100 BXN100LA4**	359

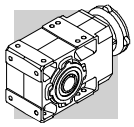

2.2 kW

n_2 min-1	M_2 Nm	S	i	R_{n2} N	 IE3		 IEC IE3	
6.1	3043	2.6	232.6	65000			**A804_232.6 P100 BXN100LA4**	362
6.3	2958	0.9	226.1	30000			**A604_226.1 P100 BXN100LA4**	355
6.5	2882	1.7	220.3	50000			**A704_220.3 P100 BXN100LA4**	359
6.7	2809	2.8	214.7	65000			**A804_214.7 P100 BXN100LA4**	362
6.9	2731	1.0	208.7	30000			**A604_208.7 P100 BXN100LA4**	355
7.7	2485	1.1	185.8	30000			**A603_185.8 P100 BXN100LA4**	355
7.8	2406	2.1	183.9	50000			**A704_183.9 P100 BXN100LA4**	359
8.3	2294	1.2	171.5	30000			**A603_171.5 P100 BXN100LA4**	355
8.3	2241	3.6	171.3	65000			**A804_171.3 P100 BXN100LA4**	362
8.4	2221	2.3	169.8	50000			**A704_169.8 P100 BXN100LA4**	359
8.9	2146	0.9	160.4	30000			**A553_160.4 P100 BXN100LA4**	351
9.2	2087	1.3	156.0	30000			**A603_156.0 P100 BXN100LA4**	355
9.3	2056	2.0	153.7	50000			**A703_153.7 P100 BXN100LA4**	359
9.7	1964	1.0	146.8	30000			**A553_146.8 P100 BXN100LA4**	351
9.9	1927	1.5	144.0	30000			**A603_144.0 P100 BXN100LA4**	355
10.1	1898	2.6	141.9	50000			**A703_141.9 P100 BXN100LA4**	359
10.7	1783	1.6	133.3	30000			**A603_133.3 P100 BXN100LA4**	355
10.8	1776	1.1	132.7	30000			**A553_132.7 P100 BXN100LA4**	351
10.9	1748	2.9	130.7	50000			**A703_130.7 P100 BXN100LA4**	359
11.5	1657	1.2	123.9	30000			**A553_123.9 P100 BXN100LA4**	351
11.6	1646	1.7	123.0	30000			**A603_123.0 P100 BXN100LA4**	355
11.9	1613	3.1	120.6	50000			**A703_120.6 P100 BXN100LA4**	359
12.1	1578	1.0	118.0	20000			**A503_118.0 P100 BXN100LA4**	347
13.1	1464	1.0	109.4	20000			**A503_109.4 P100 BXN100LA4**	347
13.3	1442	1.9	107.8	30000			**A603_107.8 P100 BXN100LA4**	355
13.7	1394	3.6	104.2	50000			**A703_104.2 P100 BXN100LA4**	359
14.1	1356	1.5	101.4	30000			**A553_101.4 P100 BXN100LA4**	351
14.4	1331	1.1	99.5	20000			**A503_99.5 P100 BXN100LA4**	347
14.4	1331	2.1	99.5	30000			**A603_99.5 P100 BXN100LA4**	355
16.0	1198	1.3	89.5	19800			**A503_89.5 P100 BXN100LA4**	347
16.6	1155	2.4	86.4	30000			**A603_86.4 P100 BXN100LA4**	355
17.6	1090	1.4	81.5	19600			**A503_81.5 P100 BXN100LA4**	347
17.9	1066	2.6	79.7	30000			**A603_79.7 P100 BXN100LA4**	355
18.0	1064	1.9	79.5	30000			**A553_79.5 P100 BXN100LA4**	351
20.3	942	3.0	70.4	30000			**A603_70.4 P100 BXN100LA4**	355
20.4	940	1.6	70.2	19300			**A503_70.2 P100 BXN100LA4**	347
22.0	869	3.2	65.0	30000			**A603_65.0 P100 BXN100LA4**	355
22.2	860	2.3	64.3	30000			**A553_64.3 P100 BXN100LA4**	351
22.3	887	1.0	64.2	14500			**A412_64.2 P100 BXN100LA4**	343
22.4	855	1.8	63.9	19000			**A503_63.9 P100 BXN100LA4**	347
24.3	813	1.0	58.8	14400			**A412_58.8 P100 BXN100LA4**	343
25.2	760	2.0	56.8	18600			**A503_56.8 P100 BXN100LA4**	347
26.9	734	1.2	53.1	14100			**A412_53.1 P100 BXN100LA4**	343
27.7	691	2.2	51.7	18300			**A503_51.7 P100 BXN100LA4**	347
28.1	682	2.9	51.0	30000			**A553_51.0 P100 BXN100LA4**	351
29.1	678	0.9	49.1	9900			**A352_49.1 P100 BXN100LA4**	339
29.6	667	1.3	48.3	13900			**A412_48.3 P100 BXN100LA4**	343
31	633	0.9	45.8	9840			**A352_45.8 P100 BXN100LA4**	339
32	623	1.3	45.1	13700			**A412_45.1 P100 BXN100LA4**	343
32	602	2.5	45.0	17900			**A503_45.0 P100 BXN100LA4**	347
34	577	1.0	41.8	9750			**A352_41.8 P100 BXN100LA4**	339
35	548	2.7	40.9	17500			**A503_40.9 P100 BXN100LA4**	347
39	506	1.2	36.6	9600			**A352_36.6 P100 BXN100LA4**	339
40	496	1.6	35.9	13100			**A412_35.9 P100 BXN100LA4**	343

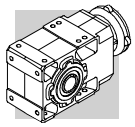

2.2 kW

n_2 min-1	M_2 Nm	S	i	R_{n2} N	 IE3		 IEC IE3	
40	476	3.1	35.6	17000			**A503_35.6 P100 BXN100LA4**	347
43	462	0.9	33.4	5050			**A302_33.4 P100 BXN100LA4**	335
43	458	1.3	33.2	9460			**A352_33.2 P100 BXN100LA4**	339
44	433	3.5	32.4	16600			**A503_32.4 P100 BXN100LA4**	347
49	405	1.0	29.3	5380			**A302_29.3 P100 BXN100LA4**	335
50	393	1.5	28.4	9230			**A352_28.4 P100 BXN100LA4**	339
50	391	1.9	28.3	12400			**A412_28.3 P100 BXN100LA4**	343
54	367	1.1	26.5	5350			**A302_26.5 P100 BXN100LA4**	335
56	355	1.7	25.7	9070			**A352_25.7 P100 BXN100LA4**	339
63	314	1.3	22.8	5290			**A302_22.8 P100 BXN100LA4**	335
63	313	2.2	22.7	11700			**A412_22.7 P100 BXN100LA4**	343
64	311	1.9	22.5	8840			**A352_22.5 P100 BXN100LA4**	339
70	284	1.4	20.5	5230			**A302_20.5 P100 BXN100LA4**	335
70	282	2.1	20.4	8660			**A352_20.4 P100 BXN100LA4**	339
79	250	1.0	18.1	3140			**A202_18.1 P100 BXN100LA4**	331
80	249	1.6	18.0	5140			**A302_18.0 P100 BXN100LA4**	335
81	245	2.6	17.8	11000			**A412_17.8 P100 BXN100LA4**	343
84	234	2.6	17.0	8320			**A352_17.0 P100 BXN100LA4**	339
88	226	1.7	16.3	5060			**A302_16.3 P100 BXN100LA4**	335
88	223	1.1	16.2	3140			**A202_16.2 P100 BXN100LA4**	331
89	222	2.7	16.1	10800			**A412_16.1 P100 BXN100LA4**	343
92	214	2.8	15.5	8150			**A352_15.5 P100 BXN100LA4**	339
102	194	1.3	14.1	3120			**A202_14.1 P100 BXN100LA4**	331
104	190	3.1	13.8	10300			**A412_13.8 P100 BXN100LA4**	343
105	187	2.0	13.6	4900			**A302_13.6 P100 BXN100LA4**	335
109	181	3.3	13.1	7820			**A352_13.1 P100 BXN100LA4**	339
120	165	1.3	12.0	3070			**A202_12.0 P100 BXN100LA4**	331
121	163	1.8	11.8	4750			**A302_11.8 P100 BXN100LA4**	335
121	163	2.5	11.8	7710			**A352_11.8 P100 BXN100LA4**	339
122	162	3.4	11.7	9870			**A412_11.7 P100 BXN100LA4**	343
134	147	2.7	10.6	7510			**A352_10.6 P100 BXN100LA4**	339
135	146	1.0	10.6	2600			**A102_10.6 P100 BXN100LA4**	327
137	144	2.4	10.5	4660			**A302_10.5 P100 BXN100LA4**	335
138	143	1.6	10.3	3030			**A202_10.3 P100 BXN100LA4**	331
149	133	1.1	9.6	2580			**A102_9.6 P100 BXN100LA4**	327
153	130	1.6	9.4	2980			**A202_9.4 P100 BXN100LA4**	331
154	129	2.3	9.3	4530			**A302_9.3 P100 BXN100LA4**	335
154	129	3.1	9.3	7240			**A352_9.3 P100 BXN100LA4**	339
168	118	1.2	8.5	3050			**A102_8.5 P100 BXN100LA4**	327
169	117	2.6	8.5	4430			**A302_8.5 P100 BXN100LA4**	335
169	117	3.3	8.5	7060			**A352_8.5 P100 BXN100LA4**	339
171	116	1.8	8.4	2930			**A202_8.4 P100 BXN100LA4**	331
196	101	2.1	7.3	2860			**A202_7.3 P100 BXN100LA4**	331
198	100	1.4	7.2	2520			**A102_7.2 P100 BXN100LA4**	327
204	97	3.1	7.0	4240			**A302_7.0 P100 BXN100LA4**	335
219	90	2.3	6.5	2810			**A202_6.5 P100 BXN100LA4**	331
223	89	3.4	6.4	4150			**A302_6.4 P100 BXN100LA4**	335
226	88	1.6	6.3	2950			**A102_6.3 P100 BXN100LA4**	327
262	76	1.9	5.5	2430			**A102_5.5 P100 BXN100LA4**	327
267	74	2.8	5.4	2700			**A202_5.4 P100 BXN100LA4**	331

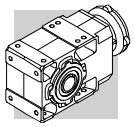

3 kW

n_2 min-1	M_2 Nm	S	i	R_{n2} N	IE2	IE3		IEC IE2	IEC IE3	
1.7	15399	0.9	865.1	75000	**A904_865.1 S3 ME3LB4**	**A904_865.1 S3 MX3LB4**	364	**A904_865.1 P100 BE100LB4**	**A904_865.1 P100 BX100LB4**	365
1.9	13651	1.0	766.9	75000	**A904_766.9 S3 ME3LB4**	**A904_766.9 S3 MX3LB4**	364	**A904_766.9 P100 BE100LB4**	**A904_766.9 P100 BX100LB4**	365
2.0	12601	1.1	707.9	75000	**A904_707.9 S3 ME3LB4**	**A904_707.9 S3 MX3LB4**	364	**A904_707.9 P100 BE100LB4**	**A904_707.9 P100 BX100LB4**	365
2.4	10708	1.3	601.6	75000	**A904_601.6 S3 ME3LB4**	**A904_601.6 S3 MX3LB4**	364	**A904_601.6 P100 BE100LB4**	**A904_601.6 P100 BX100LB4**	365
2.6	9884	1.4	555.3	75000	**A904_555.3 S3 ME3LB4**	**A904_555.3 S3 MX3LB4**	364	**A904_555.3 P100 BE100LB4**	**A904_555.3 P100 BX100LB4**	365
3.0	8661	1.6	486.6	75000	**A904_486.6 S3 ME3LB4**	**A904_486.6 S3 MX3LB4**	364	**A904_486.6 P100 BE100LB4**	**A904_486.6 P100 BX100LB4**	365
3.0	8525	0.9	478.9	65000	**A804_478.9 S3 ME3LB4**	**A804_478.9 S3 MX3LB4**	361	**A804_478.9 P100 BE100LB4**	**A804_478.9 P100 BX100LB4**	362
3.2	7995	1.8	449.2	75000	**A904_449.2 S3 ME3LB4**	**A904_449.2 S3 MX3LB4**	364	**A904_449.2 P100 BE100LB4**	**A904_449.2 P100 BX100LB4**	365
3.3	7869	1.0	442.1	65000	**A804_442.1 S3 ME3LB4**	**A804_442.1 S3 MX3LB4**	361	**A804_442.1 P100 BE100LB4**	**A804_442.1 P100 BX100LB4**	362
3.7	6861	2.0	385.4	75000	**A904_385.4 S3 ME3LB4**	**A904_385.4 S3 MX3LB4**	364	**A904_385.4 P100 BE100LB4**	**A904_385.4 P100 BX100LB4**	365
3.8	6826	1.2	383.5	65000	**A804_383.5 S3 ME3LB4**	**A804_383.5 S3 MX3LB4**	361	**A804_383.5 P100 BE100LB4**	**A804_383.5 P100 BX100LB4**	362
4.0	6333	2.2	355.8	75000	**A904_355.8 S3 ME3LB4**	**A904_355.8 S3 MX3LB4**	364	**A904_355.8 P100 BE100LB4**	**A904_355.8 P100 BX100LB4**	365
4.1	6301	1.3	354.0	65000	**A804_354.0 S3 ME3LB4**	**A804_354.0 S3 MX3LB4**	361	**A804_354.0 P100 BE100LB4**	**A804_354.0 P100 BX100LB4**	362
4.6	5631	0.9	316.4	50000	**A704_316.4 S3 ME3LB4**	**A704_316.4 S3 MX3LB4**	358	**A704_316.4 P100 BE100LB4**	**A704_316.4 P100 BX100LB4**	359
4.7	5427	2.6	304.9	75000	**A904_304.9 S3 ME3LB4**	**A904_304.9 S3 MX3LB4**	364	**A904_304.9 P100 BE100LB4**	**A904_304.9 P100 BX100LB4**	365
4.8	5347	1.5	300.4	65000	**A804_300.4 S3 ME3LB4**	**A804_300.4 S3 MX3LB4**	361	**A804_300.4 P100 BE100LB4**	**A804_300.4 P100 BX100LB4**	362
4.9	5198	1.0	292.0	50000	**A704_292.0 S3 ME3LB4**	**A704_292.0 S3 MX3LB4**	358	**A704_292.0 P100 BE100LB4**	**A704_292.0 P100 BX100LB4**	359
5.1	5010	2.8	281.4	75000	**A904_281.4 S3 ME3LB4**	**A904_281.4 S3 MX3LB4**	364	**A904_281.4 P100 BE100LB4**	**A904_281.4 P100 BX100LB4**	365
5.2	4936	1.6	277.3	65000	**A804_277.3 S3 ME3LB4**	**A804_277.3 S3 MX3LB4**	361	**A804_277.3 P100 BE100LB4**	**A804_277.3 P100 BX100LB4**	362
6.0	4247	1.2	238.6	50000	**A704_238.6 S3 ME3LB4**	**A704_238.6 S3 MX3LB4**	358	**A704_238.6 P100 BE100LB4**	**A704_238.6 P100 BX100LB4**	359
6.2	4141	1.9	232.6	65000	**A804_232.6 S3 ME3LB4**	**A804_232.6 S3 MX3LB4**	361	**A804_232.6 P100 BE100LB4**	**A804_232.6 P100 BX100LB4**	362
6.4	4030	3.5	226.4	75000	**A904_226.4 S3 ME3LB4**	**A904_226.4 S3 MX3LB4**	364	**A904_226.4 P100 BE100LB4**	**A904_226.4 P100 BX100LB4**	365
6.5	3921	1.3	220.3	50000	**A704_220.3 S3 ME3LB4**	**A704_220.3 S3 MX3LB4**	358	**A704_220.3 P100 BE100LB4**	**A704_220.3 P100 BX100LB4**	359
6.7	3822	2.1	214.7	65000	**A804_214.7 S3 ME3LB4**	**A804_214.7 S3 MX3LB4**	361	**A804_214.7 P100 BE100LB4**	**A804_214.7 P100 BX100LB4**	362
7.8	3273	1.5	183.9	50000	**A704_183.9 S3 ME3LB4**	**A704_183.9 S3 MX3LB4**	358	**A704_183.9 P100 BE100LB4**	**A704_183.9 P100 BX100LB4**	359
8.4	3121	0.9	171.5	30000	**A603_171.5 S3 ME3LB4**	**A603_171.5 S3 MX3LB4**	354	**A603_171.5 P100 BE100LB4**	**A603_171.5 P100 BX100LB4**	355
8.4	3049	2.6	171.3	65000	**A804_171.3 S3 ME3LB4**	**A804_171.3 S3 MX3LB4**	361	**A804_171.3 P100 BE100LB4**	**A804_171.3 P100 BX100LB4**	362
8.5	3022	1.7	169.8	50000	**A704_169.8 S3 ME3LB4**	**A704_169.8 S3 MX3LB4**	358	**A704_169.8 P100 BE100LB4**	**A704_169.8 P100 BX100LB4**	359
9.2	2854	2.8	156.8	65000	**A803_156.8 S3 ME3LB4**	**A803_156.8 S3 MX3LB4**	361	**A803_156.8 P100 BE100LB4**	**A803_156.8 P100 BX100LB4**	362
9.2	2840	1.0	156.0	30000	**A603_156.0 S3 ME3LB4**	**A603_156.0 S3 MX3LB4**	354	**A603_156.0 P100 BE100LB4**	**A603_156.0 P100 BX100LB4**	355
9.4	2797	1.4	153.7	50000	**A703_153.7 S3 ME3LB4**	**A703_153.7 S3 MX3LB4**	358	**A703_153.7 P100 BE100LB4**	**A703_153.7 P100 BX100LB4**	359
9.9	2634	3.0	144.7	65000	**A803_144.7 S3 ME3LB4**	**A803_144.7 S3 MX3LB4**	361	**A803_144.7 P100 BE100LB4**	**A803_144.7 P100 BX100LB4**	362
10.0	2622	1.1	144.0	30000	**A603_144.0 S3 ME3LB4**	**A603_144.0 S3 MX3LB4**	354	**A603_144.0 P100 BE100LB4**	**A603_144.0 P100 BX100LB4**	355
10.2	2582	1.9	141.9	50000	**A703_141.9 S3 ME3LB4**	**A703_141.9 S3 MX3LB4**	358	**A703_141.9 P100 BE100LB4**	**A703_141.9 P100 BX100LB4**	359
10.8	2426	1.2	133.3	30000	**A603_133.3 S3 ME3LB4**	**A603_133.3 S3 MX3LB4**	354	**A603_133.3 P100 BE100LB4**	**A603_133.3 P100 BX100LB4**	355
11.0	2378	2.1	130.7	50000	**A703_130.7 S3 ME3LB4**	**A703_130.7 S3 MX3LB4**	358	**A703_130.7 P100 BE100LB4**	**A703_130.7 P100 BX100LB4**	359
11.5	2286	3.5	125.6	65000	**A803_125.6 S3 ME3LB4**	**A803_125.6 S3 MX3LB4**	361	**A803_125.6 P100 BE100LB4**	**A803_125.6 P100 BX100LB4**	362
11.6	2255	0.9	123.9	30000	**A553_123.9 S3 ME3LB4**	**A553_123.9 S3 MX3LB4**	350	**A553_123.9 P100 BE100LB4**	**A553_123.9 P100 BX100LB4**	351
11.7	2239	1.3	123.0	30000	**A603_123.0 S3 ME3LB4**	**A603_123.0 S3 MX3LB4**	354	**A603_123.0 P100 BE100LB4**	**A603_123.0 P100 BX100LB4**	355
11.9	2195	2.3	120.6	50000	**A703_120.6 S3 ME3LB4**	**A703_120.6 S3 MX3LB4**	358	**A703_120.6 P100 BE100LB4**	**A703_120.6 P100 BX100LB4**	359
13.4	1962	1.4	107.8	30000	**A603_107.8 S3 ME3LB4**	**A603_107.8 S3 MX3LB4**	354	**A603_107.8 P100 BE100LB4**	**A603_107.8 P100 BX100LB4**	355
13.8	1897	2.6	104.2	50000	**A703_104.2 S3 ME3LB4**	**A703_104.2 S3 MX3LB4**	358	**A703_104.2 P100 BE100LB4**	**A703_104.2 P100 BX100LB4**	359
14.2	1845	1.1	101.4	30000	**A553_101.4 S3 ME3LB4**	**A553_101.4 S3 MX3LB4**	350	**A553_101.4 P100 BE100LB4**	**A553_101.4 P100 BX100LB4**	351
14.5	1811	1.5	99.5	30000	**A603_99.5 S3 ME3LB4**	**A603_99.5 S3 MX3LB4**	354	**A603_99.5 P100 BE100LB4**	**A603_99.5 P100 BX100LB4**	355
15.0	1751	2.9	96.2	50000	**A703_96.2 S3 ME3LB4**	**A703_96.2 S3 MX3LB4**	358	**A703_96.2 P100 BE100LB4**	**A703_96.2 P100 BX100LB4**	359
16.1	1630	0.9	89.5	17100	**A503_89.5 S3 ME3LB4**	**A503_89.5 S3 MX3LB4**	346	**A503_89.5 P100 BE100LB4**	**A503_89.5 P100 BX100LB4**	347
16.7	1572	1.8	86.4	30000	**A603_86.4 S3 ME3LB4**	**A603_86.4 S3 MX3LB4**	354	**A603_86.4 P100 BE100LB4**	**A603_86.4 P100 BX100LB4**	355
16.8	1564	3.2	85.9	50000	**A703_85.9 S3 ME3LB4**	**A703_85.9 S3 MX3LB4**	358	**A703_85.9 P100 BE100LB4**	**A703_85.9 P100 BX100LB4**	359
17.7	1482	1.0	81.5	17200	**A503_81.5 S3 ME3LB4**	**A503_81.5 S3 MX3LB4**	346	**A503_81.5 P100 BE100LB4**	**A503_81.5 P100 BX100LB4**	347
18.1	1451	1.9	79.7	30000	**A603_79.7 S3 ME3LB4**	**A603_79.7 S3 MX3LB4**	354	**A603_79.7 P100 BE100LB4**	**A603_79.7 P100 BX100LB4**	355
18.1	1447	1.4	79.5	30000	**A553_79.5 S3 ME3LB4**	**A553_79.5 S3 MX3LB4**	350	**A553_79.5 P100 BE100LB4**	**A553_79.5 P100 BX100LB4**	351
18.2	1444	3.5	79.3	50000	**A703_79.3 S3 ME3LB4**	**A703_79.3 S3 MX3LB4**	358	**A703_79.3 P100 BE100LB4**	**A703_79.3 P100 BX100LB4**	359
20.5	1281	2.2	70.4	30000	**A603_70.4 S3 ME3LB4**	**A603_70.4 S3 MX3LB4**	354	**A603_70.4 P100 BE100LB4**	**A603_70.4 P100 BX100LB4**	355
20.5	1278	1.2	70.2	17200	**A503_70.2 S3 ME3LB4**	**A503_70.2 S3 MX3LB4**	346	**A503_70.2 P100 BE100LB4**	**A503_70.2 P100 BX100LB4**	347
22.2	1183	2.4	65.0	30000	**A603_65.0 S3 ME3LB4**	**A603_65.0 S3 MX3LB4**	354	**A603_65.0 P100 BE100LB4**	**A603_65.0 P100 BX100LB4**	355
22.4	1171	1.7	64.3	30000	**A553_64.3 S3 ME3LB4**	**A553_64.3 S3 MX3LB4**	350	**A553_64.3 P100 BE100LB4**	**A553_64.3 P100 BX100LB4**	351

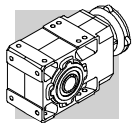

3 kW

n_2	M_2	S	i	R_{n2}	IE2	IE3		IEC IE2	IEC IE3	
min-1	Nm			N						
22.5	1163	1.3	63.9	17100	**A503_63.9 S3 ME3LB4**	**A503_63.9 S3 MX3LB4**	346	**A503_63.9 P100 BE100LB4**	**A503_63.9 P100 BX100LB4**	347
25.3	1034	1.5	56.8	17000	**A503_56.8 S3 ME3LB4**	**A503_56.8 S3 MX3LB4**	346	**A503_56.8 P100 BE100LB4**	**A503_56.8 P100 BX100LB4**	347
25.9	1012	2.8	55.6	30000	**A603_55.6 S3 ME3LB4**	**A603_55.6 S3 MX3LB4**	354	**A603_55.6 P100 BE100LB4**	**A603_55.6 P100 BX100LB4**	355
27.9	941	1.6	51.7	16800	**A503_51.7 S3 ME3LB4**	**A503_51.7 S3 MX3LB4**	346	**A503_51.7 P100 BE100LB4**	**A503_51.7 P100 BX100LB4**	347
28.1	934	3.0	51.3	30000	**A603_51.3 S3 ME3LB4**	**A603_51.3 S3 MX3LB4**	354	**A603_51.3 P100 BE100LB4**	**A603_51.3 P100 BX100LB4**	355
28.3	927	2.2	51.0	30000	**A553_51.0 S3 ME3LB4**	**A553_51.0 S3 MX3LB4**	350	**A553_51.0 P100 BE100LB4**	**A553_51.0 P100 BX100LB4**	351
29.8	908	0.9	48.3	12700	**A412_48.3 S3 ME3LB4**	**A412_48.3 S3 MX3LB4**	342	**A412_48.3 P100 BE100LB4**	**A412_48.3 P100 BX100LB4**	343
32	822	3.4	45.2	30000	**A603_45.2 S3 ME3LB4**	**A603_45.2 S3 MX3LB4**	354	**A603_45.2 P100 BE100LB4**	**A603_45.2 P100 BX100LB4**	355
32	847	1.0	45.1	12600	**A412_45.1 S3 ME3LB4**	**A412_45.1 S3 MX3LB4**	342	**A412_45.1 P100 BE100LB4**	**A412_45.1 P100 BX100LB4**	343
32	819	1.8	45.0	16500	**A503_45.0 S3 ME3LB4**	**A503_45.0 S3 MX3LB4**	346	**A503_45.0 P100 BE100LB4**	**A503_45.0 P100 BX100LB4**	347
35	745	2.0	40.9	16300	**A503_40.9 S3 ME3LB4**	**A503_40.9 S3 MX3LB4**	346	**A503_40.9 P100 BE100LB4**	**A503_40.9 P100 BX100LB4**	347
36	734	2.7	40.3	30000	**A553_40.3 S3 ME3LB4**	**A553_40.3 S3 MX3LB4**	350	**A553_40.3 P100 BE100LB4**	**A553_40.3 P100 BX100LB4**	351
39	689	0.9	36.6	8550	**A352_36.6 S3 ME3LB4**	**A352_36.6 S3 MX3LB4**	338	**A352_36.6 P100 BE100LB4**	**A352_36.6 P100 BX100LB4**	339
40	675	1.2	35.9	12200	**A412_35.9 S3 ME3LB4**	**A412_35.9 S3 MX3LB4**	342	**A412_35.9 P100 BE100LB4**	**A412_35.9 P100 BX100LB4**	343
40	648	2.3	35.6	16000	**A503_35.6 S3 ME3LB4**	**A503_35.6 S3 MX3LB4**	346	**A503_35.6 P100 BE100LB4**	**A503_35.6 P100 BX100LB4**	347
43	623	1.0	33.2	8520	**A352_33.2 S3 ME3LB4**	**A352_33.2 S3 MX3LB4**	338	**A352_33.2 P100 BE100LB4**	**A352_33.2 P100 BX100LB4**	339
44	589	2.5	32.4	15700	**A503_32.4 S3 ME3LB4**	**A503_32.4 S3 MX3LB4**	346	**A503_32.4 P100 BE100LB4**	**A503_32.4 P100 BX100LB4**	347
51	535	1.1	28.4	8420	**A352_28.4 S3 ME3LB4**	**A352_28.4 S3 MX3LB4**	338	**A352_28.4 P100 BE100LB4**	**A352_28.4 P100 BX100LB4**	339
51	532	1.4	28.3	11700	**A412_28.3 S3 ME3LB4**	**A412_28.3 S3 MX3LB4**	342	**A412_28.3 P100 BE100LB4**	**A412_28.3 P100 BX100LB4**	343
54	481	3.1	26.4	15100	**A503_26.4 S3 ME3LB4**	**A503_26.4 S3 MX3LB4**	346	**A503_26.4 P100 BE100LB4**	**A503_26.4 P100 BX100LB4**	347
56	483	1.2	25.7	8330	**A352_25.7 S3 ME3LB4**	**A352_25.7 S3 MX3LB4**	338	**A352_25.7 P100 BE100LB4**	**A352_25.7 P100 BX100LB4**	339
60	438	3.4	24.0	14800	**A503_24.0 S3 ME3LB4**	**A503_24.0 S3 MX3LB4**	346	**A503_24.0 P100 BE100LB4**	**A503_24.0 P100 BX100LB4**	347
63	428	1.0	22.8	4610	**A302_22.8 S3 ME3LB4**	**A302_22.8 S3 MX3LB4**	334	**A302_22.8 P100 BE100LB4**	**A302_22.8 P100 BX100LB4**	335
64	426	1.6	22.7	11200	**A412_22.7 S3 ME3LB4**	**A412_22.7 S3 MX3LB4**	342	**A412_22.7 P100 BE100LB4**	**A412_22.7 P100 BX100LB4**	343
64	423	1.4	22.5	8190	**A352_22.5 S3 ME3LB4**	**A352_22.5 S3 MX3LB4**	338	**A352_22.5 P100 BE100LB4**	**A352_22.5 P100 BX100LB4**	339
69	393	3.1	20.9	15500	**A502_20.9 S3 ME3LB4**	**A502_20.9 S3 MX3LB4**	346	**A502_20.9 P100 BE100LB4**	**A502_20.9 P100 BX100LB4**	347
70	386	1.1	20.5	4620	**A302_20.5 S3 ME3LB4**	**A302_20.5 S3 MX3LB4**	334	**A302_20.5 P100 BE100LB4**	**A302_20.5 P100 BX100LB4**	335
70	384	1.6	20.4	8080	**A352_20.4 S3 ME3LB4**	**A352_20.4 S3 MX3LB4**	338	**A352_20.4 P100 BE100LB4**	**A352_20.4 P100 BX100LB4**	339
80	338	1.2	18.0	4600	**A302_18.0 S3 ME3LB4**	**A302_18.0 S3 MX3LB4**	334	**A302_18.0 P100 BE100LB4**	**A302_18.0 P100 BX100LB4**	335
81	334	1.9	17.8	10600	**A412_17.8 S3 ME3LB4**	**A412_17.8 S3 MX3LB4**	342	**A412_17.8 P100 BE100LB4**	**A412_17.8 P100 BX100LB4**	343
85	319	1.9	17.0	7830	**A352_17.0 S3 ME3LB4**	**A352_17.0 S3 MX3LB4**	338	**A352_17.0 P100 BE100LB4**	**A352_17.0 P100 BX100LB4**	339
88	307	1.3	16.3	4580	**A302_16.3 S3 ME3LB4**	**A302_16.3 S3 MX3LB4**	334	**A302_16.3 P100 BE100LB4**	**A302_16.3 P100 BX100LB4**	335
89	303	2.0	16.1	10400	**A412_16.1 S3 ME3LB4**	**A412_16.1 S3 MX3LB4**	342	**A412_16.1 P100 BE100LB4**	**A412_16.1 P100 BX100LB4**	343
93	291	2.1	15.5	7700	**A352_15.5 S3 ME3LB4**	**A352_15.5 S3 MX3LB4**	338	**A352_15.5 P100 BE100LB4**	**A352_15.5 P100 BX100LB4**	339
102	265	0.9	14.1	2650	**A202_14.1 S3 ME3LB4**	**A202_14.1 S3 MX3LB4**	330	**A202_14.1 P100 BE100LB4**	**A202_14.1 P100 BX100LB4**	331
105	259	2.3	13.8	9990	**A412_13.8 S3 ME3LB4**	**A412_13.8 S3 MX3LB4**	342	**A412_13.8 P100 BE100LB4**	**A412_13.8 P100 BX100LB4**	343
106	255	1.5	13.6	4500	**A302_13.6 S3 ME3LB4**	**A302_13.6 S3 MX3LB4**	334	**A302_13.6 P100 BE100LB4**	**A302_13.6 P100 BX100LB4**	335
110	246	2.4	13.1	7450	**A352_13.1 S3 ME3LB4**	**A352_13.1 S3 MX3LB4**	338	**A352_13.1 P100 BE100LB4**	**A352_13.1 P100 BX100LB4**	339
120	225	0.9	12.0	2670	**A202_12.0 S3 ME3LB4**	**A202_12.0 S3 MX3LB4**	330	**A202_12.0 P100 BE100LB4**	**A202_12.0 P100 BX100LB4**	331
122	221	1.4	11.8	4400	**A302_11.8 S3 ME3LB4**	**A302_11.8 S3 MX3LB4**	334	**A302_11.8 P100 BE100LB4**	**A302_11.8 P100 BX100LB4**	335
122	221	1.8	11.8	7410	**A352_11.8 S3 ME3LB4**	**A352_11.8 S3 MX3LB4**	338	**A352_11.8 P100 BE100LB4**	**A352_11.8 P100 BX100LB4**	339
123	221	2.5	11.7	9580	**A412_11.7 S3 ME3LB4**	**A412_11.7 S3 MX3LB4**	342	**A412_11.7 P100 BE100LB4**	**A412_11.7 P100 BX100LB4**	343
125	216	1.5	23.1	2690	**A202_23.1 S3 ME3LB2**		330	**A202_23.1 P100 BE100L2**		331
135	200	2.0	10.6	7230	**A352_10.6 S3 ME3LB4**	**A352_10.6 S3 MX3LB4**	338	**A352_10.6 P100 BE100LB4**	**A352_10.6 P100 BX100LB4**	339
138	197	1.7	10.5	4350	**A302_10.5 S3 ME3LB4**	**A302_10.5 S3 MX3LB4**	334	**A302_10.5 P100 BE100LB4**	**A302_10.5 P100 BX100LB4**	335
139	194	1.2	10.3	2690	**A202_10.3 S3 ME3LB4**	**A202_10.3 S3 MX3LB4**	330	**A202_10.3 P100 BE100LB4**	**A202_10.3 P100 BX100LB4**	331
142	190	2.8	10.1	9230	**A412_10.1 S3 ME3LB4**	**A412_10.1 S3 MX3LB4**	342	**A412_10.1 P100 BE100LB4**	**A412_10.1 P100 BX100LB4**	343
154	176	1.2	9.4	2670	**A202_9.4 S3 ME3LB4**	**A202_9.4 S3 MX3LB4**	330	**A202_9.4 P100 BE100LB4**	**A202_9.4 P100 BX100LB4**	331
155	175	1.7	9.3	4240	**A302_9.3 S3 ME3LB4**	**A302_9.3 S3 MX3LB4**	334	**A302_9.3 P100 BE100LB4**	**A302_9.3 P100 BX100LB4**	335
155	175	2.3	9.3	7000	**A352_9.3 S3 ME3LB4**	**A352_9.3 S3 MX3LB4**	338	**A352_9.3 P100 BE100LB4**	**A352_9.3 P100 BX100LB4**	339
157	173	3.2	9.2	8980	**A412_9.2 S3 ME3LB4**	**A412_9.2 S3 MX3LB4**	342	**A412_9.2 P100 BE100LB4**	**A412_9.2 P100 BX100LB4**	343
170	159	1.9	8.5	4170	**A302_8.5 S3 ME3LB4**	**A302_8.5 S3 MX3LB4**	334	**A302_8.5 P100 BE100LB4**	**A302_8.5 P100 BX100LB4**	335
170	159	2.4	8.5	6840	**A352_8.5 S3 ME3LB4**	**A352_8.5 S3 MX3LB4**	338	**A352_8.5 P100 BE100LB4**	**A352_8.5 P100 BX100LB4**	339
172	157	1.3	8.4	2650	**A202_8.4 S3 ME3LB4**	**A202_8.4 S3 MX3LB4**	330	**A202_8.4 P100 BE100LB4**	**A202_8.4 P100 BX100LB4**	331
173	157	3.5	8.3	8740	**A412_8.3 S3 ME3LB4**	**A412_8.3 S3 MX3LB4**	342	**A412_8.3 P100 BE100LB4**	**A412_8.3 P100 BX100LB4**	343

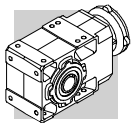

3 kW

n_2 min^{-1}	M_2 Nm	S	i	R_{n2} N	IE2	IE3		IEC IE2	IEC IE3	
198	137	1.5	7.3	2620	**A202_7.3 S3 ME3LB4**	**A202_7.3 S3 MX3LB4**	330	**A202_7.3 P100 BE100LB4**	**A202_7.3 P100 BX100LB4**	331
200	136	1.0	7.2	2220	**A102_7.2 S3 ME3LB4**	**A102_7.2 S3 MX3LB4**	326	**A102_7.2 P100 BE100LB4**	**A102_7.2 P100 BX100LB4**	327
205	132	2.3	7.0	4030	**A302_7.0 S3 ME3LB4**	**A302_7.0 S3 MX3LB4**	334	**A302_7.0 P100 BE100LB4**	**A302_7.0 P100 BX100LB4**	335
205	132	2.8	7.0	6520	**A352_7.0 S3 ME3LB4**	**A352_7.0 S3 MX3LB4**	338	**A352_7.0 P100 BE100LB4**	**A352_7.0 P100 BX100LB4**	339
220	123	1.7	6.5	2590	**A202_6.5 S3 ME3LB4**	**A202_6.5 S3 MX3LB4**	330	**A202_6.5 P100 BE100LB4**	**A202_6.5 P100 BX100LB4**	331
225	121	2.5	6.4	3950	**A302_6.4 S3 ME3LB4**	**A302_6.4 S3 MX3LB4**	334	**A302_6.4 P100 BE100LB4**	**A302_6.4 P100 BX100LB4**	335
225	121	2.9	6.4	6360	**A352_6.4 S3 ME3LB4**	**A352_6.4 S3 MX3LB4**	338	**A352_6.4 P100 BE100LB4**	**A352_6.4 P100 BX100LB4**	339
227	119	1.2	6.3	2640	**A102_6.3 S3 ME3LB4**	**A102_6.3 S3 MX3LB4**	326	**A102_6.3 P100 BE100LB4**	**A102_6.3 P100 BX100LB4**	327
245	110	2.7	11.8	3870	**A302_11.8 S3 ME3LB2**		334	**A302_11.8 P100 BE100L2**		335
263	103	1.4	5.5	2200	**A102_5.5 S3 ME3LB4**	**A102_5.5 S3 MX3LB4**	326	**A102_5.5 P100 BE100LB4**	**A102_5.5 P100 BX100LB4**	327
266	102	2.9	5.4	3810	**A302_5.4 S3 ME3LB4**	**A302_5.4 S3 MX3LB4**	334	**A302_5.4 P100 BE100LB4**	**A302_5.4 P100 BX100LB4**	335
266	102	3.3	5.4	6070	**A352_5.4 S3 ME3LB4**	**A352_5.4 S3 MX3LB4**	338	**A352_5.4 P100 BE100LB4**	**A352_5.4 P100 BX100LB4**	339
269	101	2.1	5.4	2520	**A202_5.4 S3 ME3LB4**	**A202_5.4 S3 MX3LB4**	330	**A202_5.4 P100 BE100LB4**	**A202_5.4 P100 BX100LB4**	331
279	97	1.9	10.3	2500	**A202_10.3 S3 ME3LB2**		330	**A202_10.3 P100 BE100L2**		331
309	87	3.4	9.3	3670	**A302_9.3 S3 ME3LB2**		334	**A302_9.3 P100 BE100L2**		335
344	78	2.7	8.4	2410	**A202_8.4 S3 ME3LB2**		330	**A202_8.4 P100 BE100L2**		331
399	67	2.1	7.2	2090	**A102_7.2 S3 ME3LB2**		326	**A102_7.2 P100 BE100L2**		327
455	59	2.3	6.3	2430	**A102_6.3 S3 ME3LB2**		326	**A102_6.3 P100 BE100L2**		327
527	51	2.6	5.5	1990	**A102_5.5 S3 ME3LB2**		326	**A102_5.5 P100 BE100L2**		327

3 kW

n_2 min^{-1}	M_2 Nm	S	i	R_{n2} N	IE3		IEC IE3	
1.7	15399	0.9	865.1	75000			**A904_865.1 P100 BXN100LB4**	365
1.9	13651	1.0	766.9	75000			**A904_766.9 P100 BXN100LB4**	365
2.0	12601	1.1	707.9	75000			**A904_707.9 P100 BXN100LB4**	365
2.4	10708	1.3	601.6	75000			**A904_601.6 P100 BXN100LB4**	365
2.6	9884	1.4	555.3	75000			**A904_555.3 P100 BXN100LB4**	365
3.0	8661	1.6	486.6	75000			**A904_486.6 P100 BXN100LB4**	365
3.0	8525	0.9	478.9	65000			**A804_478.9 P100 BXN100LB4**	362
3.2	7995	1.8	449.2	75000			**A904_449.2 P100 BXN100LB4**	365
3.3	7869	1.0	442.1	65000			**A804_442.1 P100 BXN100LB4**	362
3.7	6861	2.0	385.4	75000			**A904_385.4 P100 BXN100LB4**	365
3.8	6826	1.2	383.5	65000			**A804_383.5 P100 BXN100LB4**	362
4.0	6333	2.2	355.8	75000			**A904_355.8 P100 BXN100LB4**	365
4.1	6301	1.3	354.0	65000			**A804_354.0 P100 BXN100LB4**	362
4.6	5631	0.9	316.4	50000			**A704_316.4 P100 BXN100LB4**	359
4.7	5427	2.6	304.9	75000			**A904_304.9 P100 BXN100LB4**	365
4.8	5347	1.5	300.4	65000			**A804_300.4 P100 BXN100LB4**	362
4.9	5198	1.0	292.0	50000			**A704_292.0 P100 BXN100LB4**	359
5.1	5010	2.8	281.4	75000			**A904_281.4 P100 BXN100LB4**	365
5.2	4936	1.6	277.3	65000			**A804_277.3 P100 BXN100LB4**	362
6.0	4247	1.2	238.6	50000			**A704_238.6 P100 BXN100LB4**	359
6.2	4141	1.9	232.6	65000			**A804_232.6 P100 BXN100LB4**	362
6.4	4030	3.5	226.4	75000			**A904_226.4 P100 BXN100LB4**	365
6.5	3921	1.3	220.3	50000			**A704_220.3 P100 BXN100LB4**	359
6.7	3822	2.1	214.7	65000			**A804_214.7 P100 BXN100LB4**	362
7.8	3273	1.5	183.9	50000			**A704_183.9 P100 BXN100LB4**	359
8.4	3121	0.9	171.5	30000			**A603_171.5 P100 BXN100LB4**	355
8.4	3049	2.6	171.3	65000			**A804_171.3 P100 BXN100LB4**	362
8.5	3022	1.7	169.8	50000			**A704_169.8 P100 BXN100LB4**	359

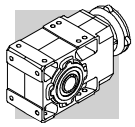

3 kW

n_2 min-1	M_2 Nm	S	i	R_{n2} N	 IE3		 IEC IE3	
9.2	2854	2.8	156.8	65000			**A803_156.8 P100 BXN100LB4**	362
9.2	2840	1.0	156.0	30000			**A603_156.0 P100 BXN100LB4**	355
9.4	2797	1.4	153.7	50000			**A703_153.7 P100 BXN100LB4**	359
9.9	2634	3.0	144.7	65000			**A803_144.7 P100 BXN100LB4**	362
10.0	2622	1.1	144.0	30000			**A603_144.0 P100 BXN100LB4**	355
10.2	2582	1.9	141.9	50000			**A703_141.9 P100 BXN100LB4**	359
10.8	2426	1.2	133.3	30000			**A603_133.3 P100 BXN100LB4**	355
11.0	2378	2.1	130.7	50000			**A703_130.7 P100 BXN100LB4**	359
11.5	2286	3.5	125.6	65000			**A803_125.6 P100 BXN100LB4**	362
11.6	2255	0.9	123.9	30000			**A553_123.9 P100 BXN100LB4**	351
11.7	2239	1.3	123.0	30000			**A603_123.0 P100 BXN100LB4**	355
11.9	2195	2.3	120.6	50000			**A703_120.6 P100 BXN100LB4**	359
13.4	1962	1.4	107.8	30000			**A603_107.8 P100 BXN100LB4**	355
13.8	1897	2.6	104.2	50000			**A703_104.2 P100 BXN100LB4**	359
14.2	1845	1.1	101.4	30000			**A553_101.4 P100 BXN100LB4**	351
14.5	1811	1.5	99.5	30000			**A603_99.5 P100 BXN100LB4**	355
15.0	1751	2.9	96.2	50000			**A703_96.2 P100 BXN100LB4**	359
16.1	1630	0.9	89.5	17100			**A503_89.5 P100 BXN100LB4**	347
16.7	1572	1.8	86.4	30000			**A603_86.4 P100 BXN100LB4**	355
16.8	1564	3.2	85.9	50000			**A703_85.9 P100 BXN100LB4**	359
17.7	1482	1.0	81.5	17200			**A503_81.5 P100 BXN100LB4**	347
18.1	1451	1.9	79.7	30000			**A603_79.7 P100 BXN100LB4**	355
18.1	1447	1.4	79.5	30000			**A553_79.5 P100 BXN100LB4**	351
18.2	1444	3.5	79.3	50000			**A703_79.3 P100 BXN100LB4**	359
20.5	1281	2.2	70.4	30000			**A603_70.4 P100 BXN100LB4**	355
20.5	1278	1.2	70.2	17200			**A503_70.2 P100 BXN100LB4**	347
22.2	1183	2.4	65.0	30000			**A603_65.0 P100 BXN100LB4**	355
22.4	1171	1.7	64.3	30000			**A553_64.3 P100 BXN100LB4**	351
22.5	1163	1.3	63.9	17100			**A503_63.9 P100 BXN100LB4**	347
25.3	1034	1.5	56.8	17000			**A503_56.8 P100 BXN100LB4**	347
25.9	1012	2.8	55.6	30000			**A603_55.6 P100 BXN100LB4**	355
27.9	941	1.6	51.7	16800			**A503_51.7 P100 BXN100LB4**	347
28.1	934	3.0	51.3	30000			**A603_51.3 P100 BXN100LB4**	355
28.3	927	2.2	51.0	30000			**A553_51.0 P100 BXN100LB4**	351
29.8	908	0.9	48.3	12700			**A412_48.3 P100 BXN100LB4**	343
32	822	3.4	45.2	30000			**A603_45.2 P100 BXN100LB4**	355
32	847	1.0	45.1	12600			**A412_45.1 P100 BXN100LB4**	343
32	819	1.8	45.0	16500			**A503_45.0 P100 BXN100LB4**	347
35	745	2.0	40.9	16300			**A503_40.9 P100 BXN100LB4**	347
36	734	2.7	40.3	30000			**A553_40.3 P100 BXN100LB4**	351
39	689	0.9	36.6	8550			**A352_36.6 P100 BXN100LB4**	339
40	675	1.2	35.9	12200			**A412_35.9 P100 BXN100LB4**	343
40	648	2.3	35.6	16000			**A503_35.6 P100 BXN100LB4**	347
43	623	1.0	33.2	8520			**A352_33.2 P100 BXN100LB4**	339
44	589	2.5	32.4	15700			**A503_32.4 P100 BXN100LB4**	347
51	535	1.1	28.4	8420			**A352_28.4 P100 BXN100LB4**	339
51	532	1.4	28.3	11700			**A412_28.3 P100 BXN100LB4**	343
54	481	3.1	26.4	15100			**A503_26.4 P100 BXN100LB4**	347
56	483	1.2	25.7	8330			**A352_25.7 P100 BXN100LB4**	339
60	438	3.4	24.0	14800			**A503_24.0 P100 BXN100LB4**	347
63	428	1.0	22.8	4610			**A302_22.8 P100 BXN100LB4**	335
64	426	1.6	22.7	11200			**A412_22.7 P100 BXN100LB4**	343
64	423	1.4	22.5	8190			**A352_22.5 P100 BXN100LB4**	339

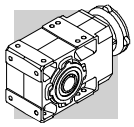

3 kW

n_2 min-1	M_2 Nm	S	i	R_{n2} N	IE3		IEC IE3	
69	393	3.1	20.9	15500			**A502_20.9 P100 BXN100LB4**	347
70	386	1.1	20.5	4620			**A302_20.5 P100 BXN100LB4**	335
70	384	1.6	20.4	8080			**A352_20.4 P100 BXN100LB4**	339
80	338	1.2	18.0	4600			**A302_18.0 P100 BXN100LB4**	335
81	334	1.9	17.8	10600			**A412_17.8 P100 BXN100LB4**	343
85	319	1.9	17.0	7830			**A352_17.0 P100 BXN100LB4**	339
88	307	1.3	16.3	4580			**A302_16.3 P100 BXN100LB4**	335
89	303	2.0	16.1	10400			**A412_16.1 P100 BXN100LB4**	343
93	291	2.1	15.5	7700			**A352_15.5 P100 BXN100LB4**	339
102	265	0.9	14.1	2650			**A202_14.1 P100 BXN100LB4**	331
105	259	2.3	13.8	9990			**A412_13.8 P100 BXN100LB4**	343
106	255	1.5	13.6	4500			**A302_13.6 P100 BXN100LB4**	335
110	246	2.4	13.1	7450			**A352_13.1 P100 BXN100LB4**	339
120	225	0.9	12.0	2670			**A202_12.0 P100 BXN100LB4**	331
122	221	1.4	11.8	4400			**A302_11.8 P100 BXN100LB4**	335
122	221	1.8	11.8	7410			**A352_11.8 P100 BXN100LB4**	339
123	221	2.5	11.7	9580			**A412_11.7 P100 BXN100LB4**	343
135	200	2.0	10.6	7230			**A352_10.6 P100 BXN100LB4**	339
138	197	1.7	10.5	4350			**A302_10.5 P100 BXN100LB4**	335
139	194	1.2	10.3	2690			**A202_10.3 P100 BXN100LB4**	331
142	190	2.8	10.1	9230			**A412_10.1 P100 BXN100LB4**	343
154	176	1.2	9.4	2670			**A202_9.4 P100 BXN100LB4**	331
155	175	1.7	9.3	4240			**A302_9.3 P100 BXN100LB4**	335
155	175	2.3	9.3	7000			**A352_9.3 P100 BXN100LB4**	339
157	173	3.2	9.2	8980			**A412_9.2 P100 BXN100LB4**	343
170	159	1.9	8.5	4170			**A302_8.5 P100 BXN100LB4**	335
170	159	2.4	8.5	6840			**A352_8.5 P100 BXN100LB4**	339
172	157	1.3	8.4	2650			**A202_8.4 P100 BXN100LB4**	331
173	157	3.5	8.3	8740			**A412_8.3 P100 BXN100LB4**	343
198	137	1.5	7.3	2620			**A202_7.3 P100 BXN100LB4**	331
200	136	1.0	7.2	2220			**A102_7.2 P100 BXN100LB4**	327
205	132	2.3	7.0	4030			**A302_7.0 P100 BXN100LB4**	335
205	132	2.8	7.0	6520			**A352_7.0 P100 BXN100LB4**	339
220	123	1.7	6.5	2590			**A202_6.5 P100 BXN100LB4**	331
225	121	2.5	6.4	3950			**A302_6.4 P100 BXN100LB4**	335
225	121	2.9	6.4	6360			**A352_6.4 P100 BXN100LB4**	339
227	119	1.2	6.3	2640			**A102_6.3 P100 BXN100LB4**	327
263	103	1.4	5.5	2200			**A102_5.5 P100 BXN100LB4**	327
266	102	2.9	5.4	3810			**A302_5.4 P100 BXN100LB4**	335
266	102	3.3	5.4	6070			**A352_5.4 P100 BXN100LB4**	339
269	101	2.1	5.4	2520			**A202_5.4 P100 BXN100LB4**	331

4 kW

n_2 min-1	M_2 Nm	S	i	R_{n2} N	IE2	IE3		IEC IE2	IEC IE3	
2.4	14456	1.0	601.6	75000	**A904_601.6 S4 ME4SA4**	**A904_601.6 S4 MX4SA4**	364	**A904_601.6 P112 BE112M4**	**A904_601.6 P112 BX112M4**	365
2.6	13344	1.0	555.3	75000	**A904_555.3 S4 ME4SA4**	**A904_555.3 S4 MX4SA4**	364	**A904_555.3 P112 BE112M4**	**A904_555.3 P112 BX112M4**	365
3.0	11693	1.2	486.6	75000	**A904_486.6 S4 ME4SA4**	**A904_486.6 S4 MX4SA4**	364	**A904_486.6 P112 BE112M4**	**A904_486.6 P112 BX112M4**	365

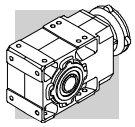

4 kW

n_2 min-1	M_2 Nm	S	i	R_{n2} N	IE2	IE3		IEC IE2	IEC IE3	
3.2	10793	1.3	449.2	75000	**A904_449.2 S4 ME4SA4**	**A904_449.2 S4 MX4SA4**	364	**A904_449.2 P112 BE112M4**	**A904_449.2 P112 BX112M4**	365
3.7	9262	1.5	385.4	75000	**A904_385.4 S4 ME4SA4**	**A904_385.4 S4 MX4SA4**	364	**A904_385.4 P112 BE112M4**	**A904_385.4 P112 BX112M4**	365
3.8	9215	0.9	383.5	65000	**A804_383.5 S4 ME4SA4**	**A804_383.5 S4 MX4SA4**	361	**A804_383.5 P112 BE112M4**	**A804_383.5 P112 BX112M4**	362
4.0	8550	1.6	355.8	75000	**A904_355.8 S4 ME4SA4**	**A904_355.8 S4 MX4SA4**	364	**A904_355.8 P112 BE112M4**	**A904_355.8 P112 BX112M4**	365
4.1	8506	0.9	354.0	65000	**A804_354.0 S4 ME4SA4**	**A804_354.0 S4 MX4SA4**	361	**A804_354.0 P112 BE112M4**	**A804_354.0 P112 BX112M4**	362
4.7	7326	1.9	304.9	75000	**A904_304.9 S4 ME4SA4**	**A904_304.9 S4 MX4SA4**	364	**A904_304.9 P112 BE112M4**	**A904_304.9 P112 BX112M4**	365
4.8	7218	1.1	300.4	65000	**A804_300.4 S4 ME4SA4**	**A804_300.4 S4 MX4SA4**	361	**A804_300.4 P112 BE112M4**	**A804_300.4 P112 BX112M4**	362
5.1	6763	2.1	281.4	75000	**A904_281.4 S4 ME4SA4**	**A904_281.4 S4 MX4SA4**	364	**A904_281.4 P112 BE112M4**	**A904_281.4 P112 BX112M4**	365
5.2	6663	1.2	277.3	65000	**A804_277.3 S4 ME4SA4**	**A804_277.3 S4 MX4SA4**	361	**A804_277.3 P112 BE112M4**	**A804_277.3 P112 BX112M4**	362
6.0	5734	0.9	238.6	50000	**A704_238.6 S4 ME4SA4**	**A704_238.6 S4 MX4SA4**	358	**A704_238.6 P112 BE112M4**	**A704_238.6 P112 BX112M4**	359
6.2	5590	1.4	232.6	65000	**A804_232.6 S4 ME4SA4**	**A804_232.6 S4 MX4SA4**	361	**A804_232.6 P112 BE112M4**	**A804_232.6 P112 BX112M4**	362
6.4	5441	2.6	226.4	75000	**A904_226.4 S4 ME4SA4**	**A904_226.4 S4 MX4SA4**	364	**A904_226.4 P112 BE112M4**	**A904_226.4 P112 BX112M4**	365
6.5	5293	0.9	220.3	50000	**A704_220.3 S4 ME4SA4**	**A704_220.3 S4 MX4SA4**	358	**A704_220.3 P112 BE112M4**	**A704_220.3 P112 BX112M4**	359
6.7	5160	1.6	214.7	65000	**A804_214.7 S4 ME4SA4**	**A804_214.7 S4 MX4SA4**	361	**A804_214.7 P112 BE112M4**	**A804_214.7 P112 BX112M4**	362
6.9	5023	2.8	209.0	75000	**A904_209.0 S4 ME4SA4**	**A904_209.0 S4 MX4SA4**	364	**A904_209.0 P112 BE112M4**	**A904_209.0 P112 BX112M4**	365
7.8	4419	1.1	183.9	50000	**A704_183.9 S4 ME4SA4**	**A704_183.9 S4 MX4SA4**	358	**A704_183.9 P112 BE112M4**	**A704_183.9 P112 BX112M4**	359
8.0	4325	3.2	180.0	75000	**A904_180.0 S4 ME4SA4**	**A904_180.0 S4 MX4SA4**	364	**A904_180.0 P112 BE112M4**	**A904_180.0 P112 BX112M4**	365
8.4	4116	1.9	171.3	65000	**A804_171.3 S4 ME4SA4**	**A804_171.3 S4 MX4SA4**	361	**A804_171.3 P112 BE112M4**	**A804_171.3 P112 BX112M4**	362
8.5	4079	1.2	169.8	50000	**A704_169.8 S4 ME4SA4**	**A704_169.8 S4 MX4SA4**	358	**A704_169.8 P112 BE112M4**	**A704_169.8 P112 BX112M4**	359
8.7	3992	3.5	166.1	75000	**A904_166.1 S4 ME4SA4**	**A904_166.1 S4 MX4SA4**	364	**A904_166.1 P112 BE112M4**	**A904_166.1 P112 BX112M4**	365
9.2	3853	2.1	156.8	65000	**A803_156.8 S4 ME4SA4**	**A803_156.8 S4 MX4SA4**	361	**A803_156.8 P112 BE112M4**	**A803_156.8 P112 BX112M4**	362
9.4	3776	1.1	153.7	50000	**A703_153.7 S4 ME4SA4**	**A703_153.7 S4 MX4SA4**	358	**A703_153.7 P112 BE112M4**	**A703_153.7 P112 BX112M4**	359
9.9	3556	2.2	144.7	65000	**A803_144.7 S4 ME4SA4**	**A803_144.7 S4 MX4SA4**	361	**A803_144.7 P112 BE112M4**	**A803_144.7 P112 BX112M4**	362
10.2	3486	1.4	141.9	50000	**A703_141.9 S4 ME4SA4**	**A703_141.9 S4 MX4SA4**	358	**A703_141.9 P112 BE112M4**	**A703_141.9 P112 BX112M4**	359
11.0	3210	1.6	130.7	50000	**A703_130.7 S4 ME4SA4**	**A703_130.7 S4 MX4SA4**	358	**A703_130.7 P112 BE112M4**	**A703_130.7 P112 BX112M4**	359
11.5	3086	2.6	125.6	65000	**A803_125.6 S4 ME4SA4**	**A803_125.6 S4 MX4SA4**	361	**A803_125.6 P112 BE112M4**	**A803_125.6 P112 BX112M4**	362
11.7	3023	0.9	123.0	30000	**A603_123.0 S4 ME4SA4**	**A603_123.0 S4 MX4SA4**	354	**A603_123.0 P112 BE112M4**	**A603_123.0 P112 BX112M4**	355
11.9	2964	1.7	120.6	50000	**A703_120.6 S4 ME4SA4**	**A703_120.6 S4 MX4SA4**	358	**A703_120.6 P112 BE112M4**	**A703_120.6 P112 BX112M4**	359
12.4	2849	2.8	116.0	65000	**A803_116.0 S4 ME4SA4**	**A803_116.0 S4 MX4SA4**	361	**A803_116.0 P112 BE112M4**	**A803_116.0 P112 BX112M4**	362
13.4	2649	1.1	107.8	30000	**A603_107.8 S4 ME4SA4**	**A603_107.8 S4 MX4SA4**	354	**A603_107.8 P112 BE112M4**	**A603_107.8 P112 BX112M4**	355
13.8	2561	2.0	104.2	50000	**A703_104.2 S4 ME4SA4**	**A703_104.2 S4 MX4SA4**	358	**A703_104.2 P112 BE112M4**	**A703_104.2 P112 BX112M4**	359
13.8	2556	3.1	104.0	65000	**A803_104.0 S4 ME4SA4**	**A803_104.0 S4 MX4SA4**	361	**A803_104.0 P112 BE112M4**	**A803_104.0 P112 BX112M4**	362
14.5	2445	1.1	99.5	30000	**A603_99.5 S4 ME4SA4**	**A603_99.5 S4 MX4SA4**	354	**A603_99.5 P112 BE112M4**	**A603_99.5 P112 BX112M4**	355
15.0	2364	2.1	96.2	50000	**A703_96.2 S4 ME4SA4**	**A703_96.2 S4 MX4SA4**	358	**A703_96.2 P112 BE112M4**	**A703_96.2 P112 BX112M4**	359
15.0	2359	3.4	96.0	65000	**A803_96.0 S4 ME4SA4**	**A803_96.0 S4 MX4SA4**	361	**A803_96.0 P112 BE112M4**	**A803_96.0 P112 BX112M4**	362
16.7	2122	1.3	86.4	30000	**A603_86.4 S4 ME4SA4**	**A603_86.4 S4 MX4SA4**	354	**A603_86.4 P112 BE112M4**	**A603_86.4 P112 BX112M4**	355
16.8	2112	2.4	85.9	50000	**A703_85.9 S4 ME4SA4**	**A703_85.9 S4 MX4SA4**	358	**A703_85.9 P112 BE112M4**	**A703_85.9 P112 BX112M4**	359
18.1	1959	1.4	79.7	30000	**A603_79.7 S4 ME4SA4**	**A603_79.7 S4 MX4SA4**	354	**A603_79.7 P112 BE112M4**	**A603_79.7 P112 BX112M4**	355
18.1	1954	1.0	79.5	30000	**A553_79.5 S4 ME4SA4**	**A553_79.5 S4 MX4SA4**	350	**A553_79.5 P112 BE112M4**	**A553_79.5 P112 BX112M4**	351
18.2	1949	2.6	79.3	50000	**A703_79.3 S4 ME4SA4**	**A703_79.3 S4 MX4SA4**	358	**A703_79.3 P112 BE112M4**	**A703_79.3 P112 BX112M4**	359
19.9	1782	2.8	72.5	50000	**A703_72.5 S4 ME4SA4**	**A703_72.5 S4 MX4SA4**	358	**A703_72.5 P112 BE112M4**	**A703_72.5 P112 BX112M4**	359
20.5	1730	1.6	70.4	30000	**A603_70.4 S4 ME4SA4**	**A603_70.4 S4 MX4SA4**	354	**A603_70.4 P112 BE112M4**	**A603_70.4 P112 BX112M4**	355
21.5	1645	3.0	66.9	50000	**A703_66.9 S4 ME4SA4**	**A703_66.9 S4 MX4SA4**	358	**A703_66.9 P112 BE112M4**	**A703_66.9 P112 BX112M4**	359
22.2	1597	1.8	65.0	30000	**A603_65.0 S4 ME4SA4**	**A603_65.0 S4 MX4SA4**	354	**A603_65.0 P112 BE112M4**	**A603_65.0 P112 BX112M4**	355
22.4	1580	1.3	64.3	30000	**A553_64.3 S4 ME4SA4**	**A553_64.3 S4 MX4SA4**	350	**A553_64.3 P112 BE112M4**	**A553_64.3 P112 BX112M4**	351
22.5	1570	1.0	63.9	14700	**A503_63.9 S4 ME4SA4**	**A503_63.9 S4 MX4SA4**	346	**A503_63.9 P112 BE112M4**	**A503_63.9 P112 BX112M4**	347
25.3	1396	1.1	56.8	14800	**A503_56.8 S4 ME4SA4**	**A503_56.8 S4 MX4SA4**	346	**A503_56.8 P112 BE112M4**	**A503_56.8 P112 BX112M4**	347
25.9	1366	2.0	55.6	30000	**A603_55.6 S4 ME4SA4**	**A603_55.6 S4 MX4SA4**	354	**A603_55.6 P112 BE112M4**	**A603_55.6 P112 BX112M4**	355
27.9	1270	1.2	51.7	14900	**A503_51.7 S4 ME4SA4**	**A503_51.7 S4 MX4SA4**	346	**A503_51.7 P112 BE112M4**	**A503_51.7 P112 BX112M4**	347
28.1	1261	2.2	51.3	30000	**A603_51.3 S4 ME4SA4**	**A603_51.3 S4 MX4SA4**	354	**A603_51.3 P112 BE112M4**	**A603_51.3 P112 BX112M4**	355
28.3	1252	1.6	51.0	30000	**A553_51.0 S4 ME4SA4**	**A553_51.0 S4 MX4SA4**	350	**A553_51.0 P112 BE112M4**	**A553_51.0 P112 BX112M4**	351
32	1110	2.5	45.2	30000	**A603_45.2 S4 ME4SA4**	**A603_45.2 S4 MX4SA4**	354	**A603_45.2 P112 BE112M4**	**A603_45.2 P112 BX112M4**	355
32	1106	1.4	45.0	14900	**A503_45.0 S4 ME4SA4**	**A503_45.0 S4 MX4SA4**	346	**A503_45.0 P112 BE112M4**	**A503_45.0 P112 BX112M4**	347
35	1025	2.7	41.7	30000	**A603_41.7 S4 ME4SA4**	**A603_41.7 S4 MX4SA4**	354	**A603_41.7 P112 BE112M4**	**A603_41.7 P112 BX112M4**	355
35	1006	1.5	40.9	14800	**A503_40.9 S4 ME4SA4**	**A503_40.9 S4 MX4SA4**	346	**A503_40.9 P112 BE112M4**	**A503_40.9 P112 BX112M4**	347
36	990	2.0	40.3	30000	**A553_40.3 S4 ME4SA4**	**A553_40.3 S4 MX4SA4**	350	**A553_40.3 P112 BE112M4**	**A553_40.3 P112 BX112M4**	351
40	875	1.7	35.6	14700	**A503_35.6 S4 ME4SA4**	**A503_35.6 S4 MX4SA4**	346	**A503_35.6 P112 BE112M4**	**A503_35.6 P112 BX112M4**	347
42	843	3.3	34.3	30000	**A603_34.3 S4 ME4SA4**	**A603_34.3 S4 MX4SA4**	354	**A603_34.3 P112 BE112M4**	**A603_34.3 P112 BX112M4**	355

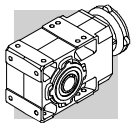

4 kW

n_2	M_2	S	i	R_{n2}						
min-1	Nm			N	IE2	IE3		IEC IE2	IE3	
44	796	1.9	32.4	14500	**A503_32.4 S4 ME4SA4**	**A503_32.4 S4 MX4SA4**	346	**A503_32.4 P112 BE112M4**	**A503_32.4 P112 BX112M4**	347
48	735	2.7	29.9	30000	**A553_29.9 S4 ME4SA4**	**A553_29.9 S4 MX4SA4**	350	**A553_29.9 P112 BE112M4**	**A553_29.9 P112 BX112M4**	351
51	719	1.0	28.3	10900	**A412_28.3 S4 ME4SA4**	**A412_28.3 S4 MX4SA4**	342	**A412_28.3 P112 BE112M4**	**A412_28.3 P112 BX112M4**	343
54	650	2.3	26.4	14100	**A503_26.4 S4 ME4SA4**	**A503_26.4 S4 MX4SA4**	346	**A503_26.4 P112 BE112M4**	**A503_26.4 P112 BX112M4**	347
56	652	0.9	25.7	7420				**A352_25.7 P112 BE112M4**	**A352_25.7 P112 BX112M4**	339
60	591	2.5	24.0	13900	**A503_24.0 S4 ME4SA4**	**A503_24.0 S4 MX4SA4**	346	**A503_24.0 P112 BE112M4**	**A503_24.0 P112 BX112M4**	347
61	585	3.3	23.8	30000	**A553_23.8 S4 ME4SA4**	**A553_23.8 S4 MX4SA4**	350	**A553_23.8 P112 BE112M4**	**A553_23.8 P112 BX112M4**	351
64	576	1.2	22.7	10500	**A412_22.7 S4 ME4SA4**	**A412_22.7 S4 MX4SA4**	342	**A412_22.7 P112 BE112M4**	**A412_22.7 P112 BX112M4**	343
64	571	1.1	22.5	7400				**A352_22.5 P112 BE112M4**	**A352_22.5 P112 BX112M4**	339
69	531	2.3	20.9	15100	**A502_20.9 S4 ME4SA4**	**A502_20.9 S4 MX4SA4**	346	**A502_20.9 P112 BE112M4**	**A502_20.9 P112 BX112M4**	347
70	518	1.2	20.4	7360				**A352_20.4 P112 BE112M4**	**A352_20.4 P112 BX112M4**	339
80	456	0.9	18.0	3930				**A302_18.0 P112 BE112M4**	**A302_18.0 P112 BX112M4**	335
81	451	1.4	17.8	10100	**A412_17.8 S4 ME4SA4**	**A412_17.8 S4 MX4SA4**	342	**A412_17.8 P112 BE112M4**	**A412_17.8 P112 BX112M4**	343
85	430	1.4	17.0	7240				**A352_17.0 P112 BE112M4**	**A352_17.0 P112 BX112M4**	339
87	421	2.9	16.6	14200	**A502_16.6 S4 ME4SA4**	**A502_16.6 S4 MX4SA4**	346	**A502_16.6 P112 BE112M4**	**A502_16.6 P112 BX112M4**	347
88	415	0.9	16.3	3970				**A302_16.3 P112 BE112M4**	**A302_16.3 P112 BX112M4**	335
89	408	1.5	16.1	9940	**A412_16.1 S4 ME4SA4**	**A412_16.1 S4 MX4SA4**	342	**A412_16.1 P112 BE112M4**	**A412_16.1 P112 BX112M4**	343
93	393	1.5	15.5	7160				**A352_15.5 P112 BE112M4**	**A352_15.5 P112 BX112M4**	339
105	349	1.7	13.8	9610	**A412_13.8 S4 ME4SA4**	**A412_13.8 S4 MX4SA4**	342	**A412_13.8 P112 BE112M4**	**A412_13.8 P112 BX112M4**	343
106	344	1.1	13.6	4000				**A302_13.6 P112 BE112M4**	**A302_13.6 P112 BX112M4**	335
110	333	3.3	13.1	13300	**A502_13.1 S4 ME4SA4**	**A502_13.1 S4 MX4SA4**	346	**A502_13.1 P112 BE112M4**	**A502_13.1 P112 BX112M4**	347
110	332	1.8	13.1	7000				**A352_13.1 P112 BE112M4**	**A352_13.1 P112 BX112M4**	339
122	299	1.0	11.8	3960				**A302_11.8 P112 BE112M4**	**A302_11.8 P112 BX112M4**	335
122	299	1.3	11.8	7050	**A352_11.8 S4 ME4SA4**	**A352_11.8 S4 MX4SA4**	338	**A352_11.8 P112 BE112M4**	**A352_11.8 P112 BX112M4**	339
123	298	1.8	11.7	9260	**A412_11.7 S4 ME4SA4**	**A412_11.7 S4 MX4SA4**	342	**A412_11.7 P112 BE112M4**	**A412_11.7 P112 BX112M4**	343
127	282	1.2	22.8	3980				**A302_22.8 P112 BE112M2**		335
135	270	1.5	10.6	6910	**A352_10.6 S4 ME4SA4**	**A352_10.6 S4 MX4SA4**	338	**A352_10.6 P112 BE112M4**	**A352_10.6 P112 BX112M4**	339
138	265	1.3	10.5	3970				**A302_10.5 P112 BE112M4**	**A302_10.5 P112 BX112M4**	335
142	257	2.1	10.1	8960	**A412_10.1 S4 ME4SA4**	**A412_10.1 S4 MX4SA4**	342	**A412_10.1 P112 BE112M4**	**A412_10.1 P112 BX112M4**	343
155	236	1.3	9.3	3900				**A302_9.3 P112 BE112M4**	**A302_9.3 P112 BX112M4**	335
155	236	1.7	9.3	6730	**A352_9.3 S4 ME4SA4**	**A352_9.3 S4 MX4SA4**	338	**A352_9.3 P112 BE112M4**	**A352_9.3 P112 BX112M4**	339
157	233	2.4	9.2	8740	**A412_9.2 S4 ME4SA4**	**A412_9.2 S4 MX4SA4**	342	**A412_9.2 P112 BE112M4**	**A412_9.2 P112 BX112M4**	343
170	215	1.4	8.5	3860				**A302_8.5 P112 BE112M4**	**A302_8.5 P112 BX112M4**	335
170	215	1.8	8.5	6590	**A352_8.5 S4 ME4SA4**	**A352_8.5 S4 MX4SA4**	338	**A352_8.5 P112 BE112M4**	**A352_8.5 P112 BX112M4**	339
172	212	1.0	8.4	2300				**A202_8.4 P112 BE112M4**	**A202_8.4 P112 BX112M4**	331
173	211	2.6	8.3	8520	**A412_8.3 S4 ME4SA4**	**A412_8.3 S4 MX4SA4**	342	**A412_8.3 P112 BE112M4**	**A412_8.3 P112 BX112M4**	343
198	185	1.1	7.3	2310				**A202_7.3 P112 BE112M4**	**A202_7.3 P112 BX112M4**	331
202	181	3.0	7.1	8180	**A412_7.1 S4 ME4SA4**	**A412_7.1 S4 MX4SA4**	342	**A412_7.1 P112 BE112M4**	**A412_7.1 P112 BX112M4**	343
205	178	1.7	7.0	3770				**A302_7.0 P112 BE112M4**	**A302_7.0 P112 BX112M4**	335
205	178	2.1	7.0	6310	**A352_7.0 S4 ME4SA4**	**A352_7.0 S4 MX4SA4**	338	**A352_7.0 P112 BE112M4**	**A352_7.0 P112 BX112M4**	339
220	166	1.3	6.5	2310				**A202_6.5 P112 BE112M4**	**A202_6.5 P112 BX112M4**	331
225	163	1.8	6.4	3720				**A302_6.4 P112 BE112M4**	**A302_6.4 P112 BX112M4**	335
225	163	2.2	6.4	6180	**A352_6.4 S4 ME4SA4**	**A352_6.4 S4 MX4SA4**	338	**A352_6.4 P112 BE112M4**	**A352_6.4 P112 BX112M4**	339
263	139	1.0	5.5	1910	**A102_5.5 S4 ME4SA4**	**A102_5.5 S4 MX4SA4**	326	**A102_5.5 P112 BE112M4**	**A102_5.5 P112 BX112M4**	327
266	137	2.2	5.4	3610				**A302_5.4 P112 BE112M4**	**A302_5.4 P112 BX112M4**	335
266	137	2.5	5.4	5920	**A352_5.4 S4 ME4SA4**	**A352_5.4 S4 MX4SA4**	338	**A352_5.4 P112 BE112M4**	**A352_5.4 P112 BX112M4**	339
269	136	1.5	5.4	2300				**A202_5.4 P112 BE112M4**	**A202_5.4 P112 BX112M4**	331
273	132	3.0	10.6	5850	**A352_10.6 S4 ME4SA2**		338	**A352_10.6 P112 BE112M2**		339
311	115	3.5	9.3	5650	**A352_9.3 S4 ME4SA2**		338	**A352_9.3 P112 BE112M2**		339
346	104	2.1	8.4	2230				**A202_8.4 P112 BE112M2**		331
413	87	3.4	7.0	3280				**A302_7.0 P112 BE112M2**		335
458	78	1.8	6.3	2240				**A102_6.3 P112 BE112M2**		327
542	66	2.9	5.4	2080				**A202_5.4 P112 BE112M2**		331

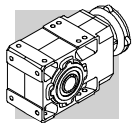

4 kW

n_2 min-1	M_2 Nm	S	i	R_{n2} N	 IE3		 IEC IE3	
2.4	14456	1.0	601.6	75000			**A904_601.6 P112 BXN112M4**	365
2.6	13344	1.0	555.3	75000			**A904_555.3 P112 BXN112M4**	365
3.0	11693	1.2	486.6	75000			**A904_486.6 P112 BXN112M4**	365
3.2	10793	1.3	449.2	75000			**A904_449.2 P112 BXN112M4**	365
3.7	9262	1.5	385.4	75000			**A904_385.4 P112 BXN112M4**	365
3.8	9215	0.9	383.5	65000			**A804_383.5 P112 BXN112M4**	362
4.0	8550	1.6	355.8	75000			**A904_355.8 P112 BXN112M4**	365
4.1	8506	0.9	354.0	65000			**A804_354.0 P112 BXN112M4**	362
4.7	7326	1.9	304.9	75000			**A904_304.9 P112 BXN112M4**	365
4.8	7218	1.1	300.4	65000			**A804_300.4 P112 BXN112M4**	362
5.1	6763	2.1	281.4	75000			**A904_281.4 P112 BXN112M4**	365
5.2	6663	1.2	277.3	65000			**A804_277.3 P112 BXN112M4**	362
6.0	5734	0.9	238.6	50000			**A704_238.6 P112 BXN112M4**	359
6.2	5590	1.4	232.6	65000			**A804_232.6 P112 BXN112M4**	362
6.4	5441	2.6	226.4	75000			**A904_226.4 P112 BXN112M4**	365
6.5	5293	0.9	220.3	50000			**A704_220.3 P112 BXN112M4**	359
6.7	5160	1.6	214.7	65000			**A804_214.7 P112 BXN112M4**	362
6.9	5023	2.8	209.0	75000			**A904_209.0 P112 BXN112M4**	365
7.8	4419	1.1	183.9	50000			**A704_183.9 P112 BXN112M4**	359
8.0	4325	3.2	180.0	75000			**A904_180.0 P112 BXN112M4**	365
8.4	4116	1.9	171.3	65000			**A804_171.3 P112 BXN112M4**	362
8.5	4079	1.2	169.8	50000			**A704_169.8 P112 BXN112M4**	359
8.7	3992	3.5	166.1	75000			**A904_166.1 P112 BXN112M4**	365
9.2	3853	2.1	156.8	65000			**A803_156.8 P112 BXN112M4**	362
9.4	3776	1.1	153.7	50000			**A703_153.7 P112 BXN112M4**	359
9.9	3556	2.2	144.7	65000			**A803_144.7 P112 BXN112M4**	362
10.2	3486	1.4	141.9	50000			**A703_141.9 P112 BXN112M4**	359
11.0	3210	1.6	130.7	50000			**A703_130.7 P112 BXN112M4**	359
11.5	3086	2.6	125.6	65000			**A803_125.6 P112 BXN112M4**	362
11.7	3023	0.9	123.0	30000			**A603_123.0 P112 BXN112M4**	355
11.9	2964	1.7	120.6	50000			**A703_120.6 P112 BXN112M4**	359
12.4	2849	2.8	116.0	65000			**A803_116.0 P112 BXN112M4**	362
13.4	2649	1.1	107.8	30000			**A603_107.8 P112 BXN112M4**	355
13.8	2561	2.0	104.2	50000			**A703_104.2 P112 BXN112M4**	359
13.8	2556	3.1	104.0	65000			**A803_104.0 P112 BXN112M4**	362
14.5	2445	1.1	99.5	30000			**A603_99.5 P112 BXN112M4**	355
15.0	2364	2.1	96.2	50000			**A703_96.2 P112 BXN112M4**	359
15.0	2359	3.4	96.0	65000			**A803_96.0 P112 BXN112M4**	362
16.7	2122	1.3	86.4	30000			**A603_86.4 P112 BXN112M4**	355
16.8	2112	2.4	85.9	50000			**A703_85.9 P112 BXN112M4**	359
18.1	1959	1.4	79.7	30000			**A603_79.7 P112 BXN112M4**	355
18.1	1954	1.0	79.5	30000			**A553_79.5 P112 BXN112M4**	351
18.2	1949	2.6	79.3	50000			**A703_79.3 P112 BXN112M4**	359
19.9	1782	2.8	72.5	50000			**A703_72.5 P112 BXN112M4**	359
20.5	1730	1.6	70.4	30000			**A603_70.4 P112 BXN112M4**	355
21.5	1645	3.0	66.9	50000			**A703_66.9 P112 BXN112M4**	359
22.2	1597	1.8	65.0	30000			**A603_65.0 P112 BXN112M4**	355
22.4	1580	1.3	64.3	30000			**A553_64.3 P112 BXN112M4**	351
22.5	1570	1.0	63.9	14700			**A503_63.9 P112 BXN112M4**	347
25.3	1396	1.1	56.8	14800			**A503_56.8 P112 BXN112M4**	347
25.9	1366	2.0	55.6	30000			**A603_55.6 P112 BXN112M4**	355
27.9	1270	1.2	51.7	14900			**A503_51.7 P112 BXN112M4**	347
28.1	1261	2.2	51.3	30000			**A603_51.3 P112 BXN112M4**	355
28.3	1252	1.6	51.0	30000			**A553_51.0 P112 BXN112M4**	351
32	1110	2.5	45.2	30000			**A603_45.2 P112 BXN112M4**	355
32	1106	1.4	45.0	14900			**A503_45.0 P112 BXN112M4**	347
35	1025	2.7	41.7	30000			**A603_41.7 P112 BXN112M4**	355

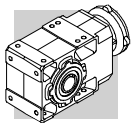

4 kW

n_2 min-1	M_2 Nm	S	i	R_{n2} N	IE3		IEC IE3	
35	1006	1.5	40.9	14800			**A503_40.9 P112 BXN112M4**	347
36	990	2.0	40.3	30000			**A553_40.3 P112 BXN112M4**	351
40	875	1.7	35.6	14700			**A503_35.6 P112 BXN112M4**	347
42	843	3.3	34.3	30000			**A603_34.3 P112 BXN112M4**	355
44	796	1.9	32.4	14500			**A503_32.4 P112 BXN112M4**	347
48	735	2.7	29.9	30000			**A553_29.9 P112 BXN112M4**	351
51	719	1.0	28.3	10900			**A412_28.3 P112 BXN112M4**	343
54	650	2.3	26.4	14100			**A503_26.4 P112 BXN112M4**	347
56	652	0.9	25.7	7420			**A352_25.7 P112 BXN112M4**	339
60	591	2.5	24.0	13900			**A503_24.0 P112 BXN112M4**	347
61	585	3.3	23.8	30000			**A553_23.8 P112 BXN112M4**	351
64	576	1.2	22.7	10500			**A412_22.7 P112 BXN112M4**	343
64	571	1.1	22.5	7400			**A352_22.5 P112 BXN112M4**	339
69	531	2.3	20.9	15100			**A502_20.9 P112 BXN112M4**	347
70	518	1.2	20.4	7360			**A352_20.4 P112 BXN112M4**	339
80	456	0.9	18.0	3930			**A302_18.0 P112 BXN112M4**	335
81	451	1.4	17.8	10100			**A412_17.8 P112 BXN112M4**	343
85	430	1.4	17.0	7240			**A352_17.0 P112 BXN112M4**	339
87	421	2.9	16.6	14200			**A502_16.6 P112 BXN112M4**	347
88	415	0.9	16.3	3970			**A302_16.3 P112 BXN112M4**	335
89	408	1.5	16.1	9940			**A412_16.1 P112 BXN112M4**	343
93	393	1.5	15.5	7160			**A352_15.5 P112 BXN112M4**	339
105	349	1.7	13.8	9610			**A412_13.8 P112 BXN112M4**	343
106	344	1.1	13.6	4000			**A302_13.6 P112 BXN112M4**	335
110	333	3.3	13.1	13300			**A502_13.1 P112 BXN112M4**	347
110	332	1.8	13.1	7000			**A352_13.1 P112 BXN112M4**	339
122	299	1.0	11.8	3960			**A302_11.8 P112 BXN112M4**	335
122	299	1.3	11.8	7050			**A352_11.8 P112 BXN112M4**	339
123	298	1.8	11.7	9260			**A412_11.7 P112 BXN112M4**	343
135	270	1.5	10.6	6910			**A352_10.6 P112 BXN112M4**	339
138	265	1.3	10.5	3970			**A302_10.5 P112 BXN112M4**	335
142	257	2.1	10.1	8960			**A412_10.1 P112 BXN112M4**	343
155	236	1.3	9.3	3900			**A302_9.3 P112 BXN112M4**	335
155	236	1.7	9.3	6730			**A352_9.3 P112 BXN112M4**	339
157	233	2.4	9.2	8740			**A412_9.2 P112 BXN112M4**	343
170	215	1.4	8.5	3860			**A302_8.5 P112 BXN112M4**	335
170	215	1.8	8.5	6590			**A352_8.5 P112 BXN112M4**	339
172	212	1.0	8.4	2300			**A202_8.4 P112 BXN112M4**	331
173	211	2.6	8.3	8520			**A412_8.3 P112 BXN112M4**	343
198	185	1.1	7.3	2310			**A202_7.3 P112 BXN112M4**	331
202	181	3.0	7.1	8180			**A412_7.1 P112 BXN112M4**	343
205	178	1.7	7.0	3770			**A302_7.0 P112 BXN112M4**	335
205	178	2.1	7.0	6310			**A352_7.0 P112 BXN112M4**	339
220	166	1.3	6.5	2310			**A202_6.5 P112 BXN112M4**	331
225	163	1.8	6.4	3720			**A302_6.4 P112 BXN112M4**	335
225	163	2.2	6.4	6180			**A352_6.4 P112 BXN112M4**	339
263	139	1.0	5.5	1910			**A102_5.5 P112 BXN112M4**	327
266	137	2.2	5.4	3610			**A302_5.4 P112 BXN112M4**	335
266	137	2.5	5.4	5920			**A352_5.4 P112 BXN112M4**	339
269	136	1.5	5.4	2300			**A202_5.4 P112 BXN112M4**	331

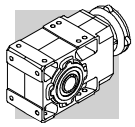

5.5 kW

n_2	M_2	S	i	R_{n2}	IE2	IE3		IEC IE2	IEC IE3	
min-1	Nm			N						
3.0	15590	0.9	486.6	75000	**A904_486.6 S4 ME4SB4**	**A904_486.6 S4 MX4SB4**	364	**A904_486.6 P132 BE132S4**	**A904_486.6 P132 BX132SB4**	365
3.3	14391	1.0	449.2	75000	**A904_449.2 S4 ME4SB4**	**A904_449.2 S4 MX4SB4**	364	**A904_449.2 P132 BE132S4**	**A904_449.2 P132 BX132SB4**	365
3.8	12350	1.1	385.4	75000	**A904_385.4 S4 ME4SB4**	**A904_385.4 S4 MX4SB4**	364	**A904_385.4 P132 BE132S4**	**A904_385.4 P132 BX132SB4**	365
4.1	11400	1.2	355.8	75000	**A904_355.8 S4 ME4SB4**	**A904_355.8 S4 MX4SB4**	364	**A904_355.8 P132 BE132S4**	**A904_355.8 P132 BX132SB4**	365
4.8	9769	1.4	304.9	75000	**A904_304.9 S4 ME4SB4**	**A904_304.9 S4 MX4SB4**	364	**A904_304.9 P132 BE132S4**	**A904_304.9 P132 BX132SB4**	365
5.2	9017	1.6	281.4	75000	**A904_281.4 S4 ME4SB4**	**A904_281.4 S4 MX4SB4**	364	**A904_281.4 P132 BE132S4**	**A904_281.4 P132 BX132SB4**	365
5.3	8884	0.9	277.3	65000	**A804_277.3 S4 ME4SB4**	**A804_277.3 S4 MX4SB4**	361	**A804_277.3 P132 BE132S4**	**A804_277.3 P132 BX132SB4**	362
6.3	7453	1.1	232.6	65000	**A804_232.6 S4 ME4SB4**	**A804_232.6 S4 MX4SB4**	361	**A804_232.6 P132 BE132S4**	**A804_232.6 P132 BX132SB4**	362
6.4	7255	1.9	226.4	75000	**A904_226.4 S4 ME4SB4**	**A904_226.4 S4 MX4SB4**	364	**A904_226.4 P132 BE132S4**	**A904_226.4 P132 BX132SB4**	365
6.8	6880	1.2	214.7	65000	**A804_214.7 S4 ME4SB4**	**A804_214.7 S4 MX4SB4**	361	**A804_214.7 P132 BE132S4**	**A804_214.7 P132 BX132SB4**	362
7.0	6697	2.1	209.0	75000	**A904_209.0 S4 ME4SB4**	**A904_209.0 S4 MX4SB4**	364	**A904_209.0 P132 BE132S4**	**A904_209.0 P132 BX132SB4**	365
8.1	5766	2.4	180.0	75000	**A904_180.0 S4 ME4SB4**	**A904_180.0 S4 MX4SB4**	364	**A904_180.0 P132 BE132S4**	**A904_180.0 P132 BX132SB4**	365
8.5	5488	1.5	171.3	65000	**A804_171.3 S4 ME4SB4**	**A804_171.3 S4 MX4SB4**	361	**A804_171.3 P132 BE132S4**	**A804_171.3 P132 BX132SB4**	362
8.6	5439	0.9	169.8	50000	**A704_169.8 S4 ME4SB4**	**A704_169.8 S4 MX4SB4**	358	**A704_169.8 P132 BE132S4**	**A704_169.8 P132 BX132SB4**	359
8.8	5323	2.6	166.1	75000	**A904_166.1 S4 ME4SB4**	**A904_166.1 S4 MX4SB4**	364	**A904_166.1 P132 BE132S4**	**A904_166.1 P132 BX132SB4**	365
9.3	5137	1.6	156.8	65000	**A803_156.8 S4 ME4SB4**	**A803_156.8 S4 MX4SB4**	361	**A803_156.8 P132 BE132S4**	**A803_156.8 P132 BX132SB4**	362
9.7	4947	2.8	151.0	75000	**A903_151.0 S4 ME4SB4**	**A903_151.0 S4 MX4SB4**	364	**A903_151.0 P132 BE132S4**	**A903_151.0 P132 BX132SB4**	365
10.1	4742	1.7	144.7	65000	**A803_144.7 S4 ME4SB4**	**A803_144.7 S4 MX4SB4**	361	**A803_144.7 P132 BE132S4**	**A803_144.7 P132 BX132SB4**	362
10.3	4647	1.1	141.9	50000	**A703_141.9 S4 ME4SB4**	**A703_141.9 S4 MX4SB4**	358	**A703_141.9 P132 BE132S4**	**A703_141.9 P132 BX132SB4**	359
10.5	4567	2.8	139.4	75000	**A903_139.4 S4 ME4SB4**	**A903_139.4 S4 MX4SB4**	364	**A903_139.4 P132 BE132S4**	**A903_139.4 P132 BX132SB4**	365
11.2	4281	1.2	130.7	50000	**A703_130.7 S4 ME4SB4**	**A703_130.7 S4 MX4SB4**	358	**A703_130.7 P132 BE132S4**	**A703_130.7 P132 BX132SB4**	359
11.5	4149	3.2	126.6	75000	**A903_126.6 S4 ME4SB4**	**A903_126.6 S4 MX4SB4**	364	**A903_126.6 P132 BE132S4**	**A903_126.6 P132 BX132SB4**	365
11.6	4115	1.9	125.6	65000	**A803_125.6 S4 ME4SB4**	**A803_125.6 S4 MX4SB4**	361	**A803_125.6 P132 BE132S4**	**A803_125.6 P132 BX132SB4**	362
12.1	3951	1.3	120.6	50000	**A703_120.6 S4 ME4SB4**	**A703_120.6 S4 MX4SB4**	358	**A703_120.6 P132 BE132S4**	**A703_120.6 P132 BX132SB4**	359
12.6	3799	2.1	116.0	65000	**A803_116.0 S4 ME4SB4**	**A803_116.0 S4 MX4SB4**	361	**A803_116.0 P132 BE132S4**	**A803_116.0 P132 BX132SB4**	362
14.0	3415	1.5	104.2	50000	**A703_104.2 S4 ME4SB4**	**A703_104.2 S4 MX4SB4**	358	**A703_104.2 P132 BE132S4**	**A703_104.2 P132 BX132SB4**	359
14.0	3408	2.3	104.0	65000	**A803_104.0 S4 ME4SB4**	**A803_104.0 S4 MX4SB4**	361	**A803_104.0 P132 BE132S4**	**A803_104.0 P132 BX132SB4**	362
15.2	3152	1.6	96.2	50000	**A703_96.2 S4 ME4SB4**	**A703_96.2 S4 MX4SB4**	358	**A703_96.2 P132 BE132S4**	**A703_96.2 P132 BX132SB4**	359
15.2	3146	2.5	96.0	65000	**A803_96.0 S4 ME4SB4**	**A803_96.0 S4 MX4SB4**	361	**A803_96.0 P132 BE132S4**	**A803_96.0 P132 BX132SB4**	362
16.4	2922	2.7	89.2	65000	**A803_89.2 S4 ME4SB4**	**A803_89.2 S4 MX4SB4**	361	**A803_89.2 P132 BE132S4**	**A803_89.2 P132 BX132SB4**	362
16.9	2829	1.0	86.4	30000	**A603_86.4 S4 ME4SB4**	**A603_86.4 S4 MX4SB4**	354	**A603_86.4 P132 BE132S4**	**A603_86.4 P132 BX132SB4**	355
17.0	2815	1.8	85.9	50000	**A703_85.9 S4 ME4SB4**	**A703_85.9 S4 MX4SB4**	358	**A703_85.9 P132 BE132S4**	**A703_85.9 P132 BX132SB4**	359
17.7	2697	3.0	82.3	65000	**A803_82.3 S4 ME4SB4**	**A803_82.3 S4 MX4SB4**	361	**A803_82.3 P132 BE132S4**	**A803_82.3 P132 BX132SB4**	362
18.3	2612	1.1	79.7	30000	**A603_79.7 S4 ME4SB4**	**A603_79.7 S4 MX4SB4**	354	**A603_79.7 P132 BE132S4**	**A603_79.7 P132 BX132SB4**	355
18.4	2599	1.9	79.3	50000	**A703_79.3 S4 ME4SB4**	**A703_79.3 S4 MX4SB4**	358	**A703_79.3 P132 BE132S4**	**A703_79.3 P132 BX132SB4**	359
20.1	2376	2.1	72.5	50000	**A703_72.5 S4 ME4SB4**	**A703_72.5 S4 MX4SB4**	358	**A703_72.5 P132 BE132S4**	**A703_72.5 P132 BX132SB4**	359
20.2	2371	3.4	72.4	65000	**A803_72.4 S4 ME4SB4**	**A803_72.4 S4 MX4SB4**	361	**A803_72.4 P132 BE132S4**	**A803_72.4 P132 BX132SB4**	362
20.7	2306	1.2	70.4	30000	**A603_70.4 S4 ME4SB4**	**A603_70.4 S4 MX4SB4**	354	**A603_70.4 P132 BE132S4**	**A603_70.4 P132 BX132SB4**	355
21.8	2193	2.3	66.9	50000	**A703_66.9 S4 ME4SB4**	**A703_66.9 S4 MX4SB4**	358	**A703_66.9 P132 BE132S4**	**A703_66.9 P132 BX132SB4**	359
22.5	2129	1.3	65.0	30000	**A603_65.0 S4 ME4SB4**	**A603_65.0 S4 MX4SB4**	354	**A603_65.0 P132 BE132S4**	**A603_65.0 P132 BX132SB4**	355
22.7	2107	0.9	64.3	30000	**A553_64.3 S4 ME4SB4**	**A553_64.3 S4 MX4SB4**	350	**A553_64.3 P132 BE132S4**	**A553_64.3 P132 BX132SB4**	351
25.3	1889	2.6	57.7	50000	**A703_57.7 S4 ME4SB4**	**A703_57.7 S4 MX4SB4**	358	**A703_57.7 P132 BE132S4**	**A703_57.7 P132 BX132SB4**	359
26.3	1822	1.5	55.6	30000	**A603_55.6 S4 ME4SB4**	**A603_55.6 S4 MX4SB4**	354	**A603_55.6 P132 BE132S4**	**A603_55.6 P132 BX132SB4**	355
27.4	1744	2.9	53.2	50000	**A703_53.2 S4 ME4SB4**	**A703_53.2 S4 MX4SB4**	358	**A703_53.2 P132 BE132S4**	**A703_53.2 P132 BX132SB4**	359
28.4	1681	1.7	51.3	30000	**A603_51.3 S4 ME4SB4**	**A603_51.3 S4 MX4SB4**	354	**A603_51.3 P132 BE132S4**	**A603_51.3 P132 BX132SB4**	355
28.7	1669	1.2	51.0	30000	**A553_51.0 S4 ME4SB4**	**A553_51.0 S4 MX4SB4**	350	**A553_51.0 P132 BE132S4**	**A553_51.0 P132 BX132SB4**	351
29.8	1605	3.1	49.0	50000	**A703_49.0 S4 ME4SB4**	**A703_49.0 S4 MX4SB4**	358	**A703_49.0 P132 BE132S4**	**A703_49.0 P132 BX132SB4**	359
32	1482	3.2	45.2	50000	**A703_45.2 S4 ME4SB4**	**A703_45.2 S4 MX4SB4**	358	**A703_45.2 P132 BE132S4**	**A703_45.2 P132 BX132SB4**	359
32	1480	1.9	45.2	30000	**A603_45.2 S4 ME4SB4**	**A603_45.2 S4 MX4SB4**	354	**A603_45.2 P132 BE132S4**	**A603_45.2 P132 BX132SB4**	355
32	1474	1.0	45.0	12400	**A503_45.0 S4 ME4SB4**	**A503_45.0 S4 MX4SB4**	346	**A503_45.0 P132 BE132S4**	**A503_45.0 P132 BX132SB4**	347
35	1367	2.0	41.7	30000	**A603_41.7 S4 ME4SB4**	**A603_41.7 S4 MX4SB4**	354	**A603_41.7 P132 BE132S4**	**A603_41.7 P132 BX132SB4**	355
36	1341	1.1	40.9	12600	**A503_40.9 S4 ME4SB4**	**A503_40.9 S4 MX4SB4**	346	**A503_40.9 P132 BE132S4**	**A503_40.9 P132 BX132SB4**	347
36	1320	1.5	40.3	30000	**A553_40.3 S4 ME4SB4**	**A553_40.3 S4 MX4SB4**	350	**A553_40.3 P132 BE132S4**	**A553_40.3 P132 BX132SB4**	351
41	1166	1.3	35.6	12700	**A503_35.6 S4 ME4SB4**	**A503_35.6 S4 MX4SB4**	346	**A503_35.6 P132 BE132S4**	**A503_35.6 P132 BX132SB4**	347
43	1124	2.5	34.3	30000	**A603_34.3 S4 ME4SB4**	**A603_34.3 S4 MX4SB4**	354	**A603_34.3 P132 BE132S4**	**A603_34.3 P132 BX132SB4**	355
45	1061	1.4	32.4	12700	**A503_32.4 S4 ME4SB4**	**A503_32.4 S4 MX4SB4**	346	**A503_32.4 P132 BE132S4**	**A503_32.4 P132 BX132SB4**	347
46	1037	2.7	31.7	30000	**A603_31.7 S4 ME4SB4**	**A603_31.7 S4 MX4SB4**	354	**A603_31.7 P132 BE132S4**	**A603_31.7 P132 BX132SB4**	355

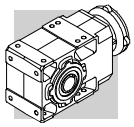

5.5 kW

n_2 min-1	M_2 Nm	S	i	R_{n2} N	IE2	IE3		IEC IE2	IEC IE3	
49	981	2.0	29.9	30000	**A553_29.9 S4 ME4SB4**	**A553_29.9 S4 MX4SB4**	350	**A553_29.9 P132 BE132S4**	**A553_29.9 P132 BX132SB4**	351
52	912	3.1	27.9	30000	**A603_27.9 S4 ME4SB4**	**A603_27.9 S4 MX4SB4**	354	**A603_27.9 P132 BE132S4**	**A603_27.9 P132 BX132SB4**	355
55	866	1.7	26.4	12600	**A503_26.4 S4 ME4SB4**	**A503_26.4 S4 MX4SB4**	346	**A503_26.4 P132 BE132S4**	**A503_26.4 P132 BX132SB4**	347
57	842	3.3	25.7	30000	**A603_25.7 S4 ME4SB4**	**A603_25.7 S4 MX4SB4**	354	**A603_25.7 P132 BE132S4**	**A603_25.7 P132 BX132SB4**	355
61	788	1.9	24.0	12500	**A503_24.0 S4 ME4SB4**	**A503_24.0 S4 MX4SB4**	346	**A503_24.0 P132 BE132S4**	**A503_24.0 P132 BX132SB4**	347
61	779	2.5	23.8	29800	**A553_23.8 S4 ME4SB4**	**A553_23.8 S4 MX4SB4**	350	**A553_23.8 P132 BE132S4**	**A553_23.8 P132 BX132SB4**	351
70	708	1.7	20.9	14400	**A502_20.9 S4 ME4SB4**	**A502_20.9 S4 MX4SB4**	346	**A502_20.9 P132 BE132S4**	**A502_20.9 P132 BX132SB4**	347
71	697	2.9	20.6	30000	**A602_20.6 S4 ME4SB4**	**A602_20.6 S4 MX4SB4**	354	**A602_20.6 P132 BE132S4**	**A602_20.6 P132 BX132SB4**	355
76	651	2.8	19.2	29300	**A552_19.2 S4 ME4SB4**	**A552_19.2 S4 MX4SB4**	350	**A552_19.2 P132 BE132S4**	**A552_19.2 P132 BX132SB4**	351
82	601	1.0	17.8	9280	**A412_17.8 S4 ME4SB4**	**A412_17.8 S4 MX4SB4**	342	**A412_17.8 P132 BE132S4**	**A412_17.8 P132 BX132SB4**	343
87	566	3.5	16.7	30000	**A602_16.7 S4 ME4SB4**	**A602_16.7 S4 MX4SB4**	354	**A602_16.7 P132 BE132S4**	**A602_16.7 P132 BX132SB4**	355
88	561	2.1	16.6	13600	**A502_16.6 S4 ME4SB4**	**A502_16.6 S4 MX4SB4**	346	**A502_16.6 P132 BE132S4**	**A502_16.6 P132 BX132SB4**	347
91	545	1.1	16.1	9160	**A412_16.1 S4 ME4SB4**	**A412_16.1 S4 MX4SB4**	342	**A412_16.1 P132 BE132S4**	**A412_16.1 P132 BX132SB4**	343
93	531	3.4	15.7	27700	**A552_15.7 S4 ME4SB4**	**A552_15.7 S4 MX4SB4**	350	**A552_15.7 P132 BE132S4**	**A552_15.7 P132 BX132SB4**	351
106	466	1.3	13.8	8940	**A412_13.8 S4 ME4SB4**	**A412_13.8 S4 MX4SB4**	342	**A412_13.8 P132 BE132S4**	**A412_13.8 P132 BX132SB4**	343
111	444	2.5	13.1	12800	**A502_13.1 S4 ME4SB4**	**A502_13.1 S4 MX4SB4**	346	**A502_13.1 P132 BE132S4**	**A502_13.1 P132 BX132SB4**	347
124	397	1.4	11.7	8670	**A412_11.7 S4 ME4SB4**	**A412_11.7 S4 MX4SB4**	342	**A412_11.7 P132 BE132S4**	**A412_11.7 P132 BX132SB4**	343
124	399	1.0	11.8	6450	**A352_11.8 S4 ME4SB4**	**A352_11.8 S4 MX4SB4**	338	**A352_11.8 P132 BE132S4**	**A352_11.8 P132 BX132SB4**	339
138	360	1.1	10.6	6360	**A352_10.6 S4 ME4SB4**	**A352_10.6 S4 MX4SB4**	338	**A352_10.6 P132 BE132S4**	**A352_10.6 P132 BX132SB4**	339
144	343	1.6	10.1	8440	**A412_10.1 S4 ME4SB4**	**A412_10.1 S4 MX4SB4**	342	**A412_10.1 P132 BE132S4**	**A412_10.1 P132 BX132SB4**	343
150	329	3.0	9.7	11800	**A502_9.7 S4 ME4SB4**	**A502_9.7 S4 MX4SB4**	346	**A502_9.7 P132 BE132S4**	**A502_9.7 P132 BX132SB4**	347
157	315	1.3	9.3	6240	**A352_9.3 S4 ME4SB4**	**A352_9.3 S4 MX4SB4**	338	**A352_9.3 P132 BE132S4**	**A352_9.3 P132 BX132SB4**	339
159	311	1.8	9.2	8250	**A412_9.2 S4 ME4SB4**	**A412_9.2 S4 MX4SB4**	342	**A412_9.2 P132 BE132S4**	**A412_9.2 P132 BX132SB4**	343
173	286	1.3	8.5	6140	**A352_8.5 S4 ME4SB4**	**A352_8.5 S4 MX4SB4**	338	**A352_8.5 P132 BE132S4**	**A352_8.5 P132 BX132SB4**	339
175	282	2.0	8.3	8080	**A412_8.3 S4 ME4SB4**	**A412_8.3 S4 MX4SB4**	342	**A412_8.3 P132 BE132S4**	**A412_8.3 P132 BX132SB4**	343
205	241	2.3	7.1	7790	**A412_7.1 S4 ME4SB4**	**A412_7.1 S4 MX4SB4**	342	**A412_7.1 P132 BE132S4**	**A412_7.1 P132 BX132SB4**	343
208	238	1.6	7.0	5930	**A352_7.0 S4 ME4SB4**	**A352_7.0 S4 MX4SB4**	338	**A352_7.0 P132 BE132S4**	**A352_7.0 P132 BX132SB4**	339
228	217	1.6	6.4	5820	**A352_6.4 S4 ME4SB4**	**A352_6.4 S4 MX4SB4**	338	**A352_6.4 P132 BE132S4**	**A352_6.4 P132 BX132SB4**	339
249	198	2.8	11.7	7430	**A412_11.7 S4 ME4SB2**		342	**A412_11.7 P132 BE132SA2**		343
270	183	1.9	5.4	5610	**A352_5.4 S4 ME4SB4**	**A352_5.4 S4 MX4SB4**	338	**A352_5.4 P132 BE132S4**	**A352_5.4 P132 BX132SB4**	339
289	171	2.5	10.1	7170	**A412_10.1 S4 ME4SB2**		342	**A412_10.1 P132 BE132SA2**		343
416	119	3.1	7.0	5060	**A352_7.0 S4 ME4SB2**		338	**A352_7.0 P132 BE132SA2**		339

5.5 kW

n_2 min-1	M_2 Nm	S	i	R_{n2} N	IE3		IEC IE3	
3.0	15590	0.9	486.6	75000			**A904_486.6 P132 BXN132S4**	365
3.3	14391	1.0	449.2	75000			**A904_449.2 P132 BXN132S4**	365
3.8	12350	1.1	385.4	75000			**A904_385.4 P132 BXN132S4**	365
4.1	11400	1.2	355.8	75000			**A904_355.8 P132 BXN132S4**	365
4.8	9769	1.4	304.9	75000			**A904_304.9 P132 BXN132S4**	365
5.2	9017	1.6	281.4	75000			**A904_281.4 P132 BXN132S4**	365
5.3	8884	0.9	277.3	65000			**A804_277.3 P132 BXN132S4**	362
6.3	7453	1.1	232.6	65000			**A804_232.6 P132 BXN132S4**	362
6.4	7255	1.9	226.4	75000			**A904_226.4 P132 BXN132S4**	365
6.8	6880	1.2	214.7	65000			**A804_214.7 P132 BXN132S4**	362
7.0	6697	2.1	209.0	75000			**A904_209.0 P132 BXN132S4**	365
8.1	5766	2.4	180.0	75000			**A904_180.0 P132 BXN132S4**	365
8.5	5488	1.5	171.3	65000			**A804_171.3 P132 BXN132S4**	362
8.6	5439	0.9	169.8	50000			**A704_169.8 P132 BXN132S4**	359
8.8	5323	2.6	166.1	75000			**A904_166.1 P132 BXN132S4**	365
9.3	5137	1.6	156.8	65000			**A803_156.8 P132 BXN132S4**	362
9.7	4947	2.8	151.0	75000			**A903_151.0 P132 BXN132S4**	365

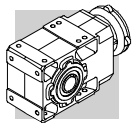

5.5 kW

n_2 min-1	M_2 Nm	S	i	R_{n2} N	 IE3		 IEC IE3		
10.1	4742	1.7	144.7	65000			**A803_144.7 P132 BXN132S4**	362
10.3	4647	1.1	141.9	50000			**A703_141.9 P132 BXN132S4**	359
10.5	4567	2.8	139.4	75000			**A903_139.4 P132 BXN132S4**	365
11.2	4281	1.2	130.7	50000			**A703_130.7 P132 BXN132S4**	359
11.5	4149	3.2	126.6	75000			**A903_126.6 P132 BXN132S4**	365
11.6	4115	1.9	125.6	65000			**A803_125.6 P132 BXN132S4**	362
12.1	3951	1.3	120.6	50000			**A703_120.6 P132 BXN132S4**	359
12.6	3799	2.1	116.0	65000			**A803_116.0 P132 BXN132S4**	362
14.0	3415	1.5	104.2	50000			**A703_104.2 P132 BXN132S4**	359
14.0	3408	2.3	104.0	65000			**A803_104.0 P132 BXN132S4**	362
15.2	3152	1.6	96.2	50000			**A703_96.2 P132 BXN132S4**	359
15.2	3146	2.5	96.0	65000			**A803_96.0 P132 BXN132S4**	362
16.4	2922	2.7	89.2	65000			**A803_89.2 P132 BXN132S4**	362
16.9	2829	1.0	86.4	30000			**A603_86.4 P132 BXN132S4**	355
17.0	2815	1.8	85.9	50000			**A703_85.9 P132 BXN132S4**	359
17.7	2697	3.0	82.3	65000			**A803_82.3 P132 BXN132S4**	362
18.3	2612	1.1	79.7	30000			**A603_79.7 P132 BXN132S4**	355
18.4	2599	1.9	79.3	50000			**A703_79.3 P132 BXN132S4**	359
20.1	2376	2.1	72.5	50000			**A703_72.5 P132 BXN132S4**	359
20.2	2371	3.4	72.4	65000			**A803_72.4 P132 BXN132S4**	362
20.7	2306	1.2	70.4	30000			**A603_70.4 P132 BXN132S4**	355
21.8	2193	2.3	66.9	50000			**A703_66.9 P132 BXN132S4**	359
22.5	2129	1.3	65.0	30000			**A603_65.0 P132 BXN132S4**	355
22.7	2107	0.9	64.3	30000			**A553_64.3 P132 BXN132S4**	351
25.3	1889	2.6	57.7	50000			**A703_57.7 P132 BXN132S4**	359
26.3	1822	1.5	55.6	30000			**A603_55.6 P132 BXN132S4**	355
27.4	1744	2.9	53.2	50000			**A703_53.2 P132 BXN132S4**	359
28.4	1681	1.7	51.3	30000			**A603_51.3 P132 BXN132S4**	355
28.7	1669	1.2	51.0	30000			**A553_51.0 P132 BXN132S4**	351
29.8	1605	3.1	49.0	50000			**A703_49.0 P132 BXN132S4**	359
32	1482	3.2	45.2	50000			**A703_45.2 P132 BXN132S4**	359
32	1480	1.9	45.2	30000			**A603_45.2 P132 BXN132S4**	355
32	1474	1.0	45.0	12400			**A503_45.0 P132 BXN132S4**	347
35	1367	2.0	41.7	30000			**A603_41.7 P132 BXN132S4**	355
36	1341	1.1	40.9	12600			**A503_40.9 P132 BXN132S4**	347
36	1320	1.5	40.3	30000			**A553_40.3 P132 BXN132S4**	351
41	1166	1.3	35.6	12700			**A503_35.6 P132 BXN132S4**	347
43	1124	2.5	34.3	30000			**A603_34.3 P132 BXN132S4**	355
45	1061	1.4	32.4	12700			**A503_32.4 P132 BXN132S4**	347
46	1037	2.7	31.7	30000			**A603_31.7 P132 BXN132S4**	355
49	981	2.0	29.9	30000			**A553_29.9 P132 BXN132S4**	351
52	912	3.1	27.9	30000			**A603_27.9 P132 BXN132S4**	355
55	866	1.7	26.4	12600			**A503_26.4 P132 BXN132S4**	347
57	842	3.3	25.7	30000			**A603_25.7 P132 BXN132S4**	355
61	788	1.9	24.0	12500			**A503_24.0 P132 BXN132S4**	347
61	779	2.5	23.8	29800			**A553_23.8 P132 BXN132S4**	351
70	708	1.7	20.9	14400			**A502_20.9 P132 BXN132S4**	347
71	697	2.9	20.6	30000			**A602_20.6 P132 BXN132S4**	355
76	651	2.8	19.2	29300			**A552_19.2 P132 BXN132S4**	351
82	601	1.0	17.8	9280			**A412_17.8 P132 BXN132S4**	343
87	566	3.5	16.7	30000			**A602_16.7 P132 BXN132S4**	355
88	561	2.1	16.6	13600			**A502_16.6 P132 BXN132S4**	347
91	545	1.1	16.1	9160			**A412_16.1 P132 BXN132S4**	343
93	531	3.4	15.7	27700			**A552_15.7 P132 BXN132S4**	351
106	466	1.3	13.8	8940			**A412_13.8 P132 BXN132S4**	343
111	444	2.5	13.1	12800			**A502_13.1 P132 BXN132S4**	347
124	397	1.4	11.7	8670			**A412_11.7 P132 BXN132S4**	343

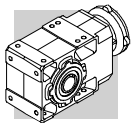

5.5 kW

n_2 min-1	M_2 Nm	S	i	R_{n2} N	IE3		IEC IE3	
124	399	1.0	11.8	6450			**A352_11.8 P132 BXN132S4**	339
138	360	1.1	10.6	6360			**A352_10.6 P132 BXN132S4**	339
144	343	1.6	10.1	8440			**A412_10.1 P132 BXN132S4**	343
150	329	3.0	9.7	11800			**A502_9.7 P132 BXN132S4**	347
157	315	1.3	9.3	6240			**A352_9.3 P132 BXN132S4**	339
159	311	1.8	9.2	8250			**A412_9.2 P132 BXN132S4**	343
173	286	1.3	8.5	6140			**A352_8.5 P132 BXN132S4**	339
175	282	2.0	8.3	8080			**A412_8.3 P132 BXN132S4**	343
205	241	2.3	7.1	7790			**A412_7.1 P132 BXN132S4**	343
208	238	1.6	7.0	5930			**A352_7.0 P132 BXN132S4**	339
228	217	1.6	6.4	5820			**A352_6.4 P132 BXN132S4**	339
270	183	1.9	5.4	5610			**A352_5.4 P132 BXN132S4**	339

7.5 kW

n_2 min-1	M_2 Nm	S	i	R_{n2} N	IE2	IE3		IEC IE2	IE3	
4.1	15516	0.9	355.8	75000	**A904_355.8 S4 ME4LA4**	**A904_355.8 S4 MX4LA4**	364	**A904_355.8 P132 BE132MA4**	**A904_355.8 P132 BX132MA4**	365
4.8	13296	1.1	304.9	75000	**A904_304.9 S4 ME4LA4**	**A904_304.9 S4 MX4LA4**	364	**A904_304.9 P132 BE132MA4**	**A904_304.9 P132 BX132MA4**	365
5.2	12273	1.1	281.4	75000	**A904_281.4 S4 ME4LA4**	**A904_281.4 S4 MX4LA4**	364	**A904_281.4 P132 BE132MA4**	**A904_281.4 P132 BX132MA4**	365
6.4	9875	1.4	226.4	75000	**A904_226.4 S4 ME4LA4**	**A904_226.4 S4 MX4LA4**	364	**A904_226.4 P132 BE132MA4**	**A904_226.4 P132 BX132MA4**	365
7.0	9115	1.5	209.0	75000	**A904_209.0 S4 ME4LA4**	**A904_209.0 S4 MX4LA4**	364	**A904_209.0 P132 BE132MA4**	**A904_209.0 P132 BX132MA4**	365
8.1	7849	1.8	180.0	75000	**A904_180.0 S4 ME4LA4**	**A904_180.0 S4 MX4LA4**	364	**A904_180.0 P132 BE132MA4**	**A904_180.0 P132 BX132MA4**	365
8.5	7470	1.1	171.3	65000	**A804_171.3 S4 ME4LA4**	**A804_171.3 S4 MX4LA4**	361	**A804_171.3 P132 BE132MA4**	**A804_171.3 P132 BX132MA4**	362
8.8	7245	1.9	166.1	75000	**A904_166.1 S4 ME4LA4**	**A904_166.1 S4 MX4LA4**	364	**A904_166.1 P132 BE132MA4**	**A904_166.1 P132 BX132MA4**	365
9.3	6992	1.1	156.8	65000	**A803_156.8 S4 ME4LA4**	**A803_156.8 S4 MX4LA4**	361	**A803_156.8 P132 BE132MA4**	**A803_156.8 P132 BX132MA4**	362
9.6	6733	2.0	151.0	75000	**A903_151.0 S4 ME4LA4**	**A903_151.0 S4 MX4LA4**	364	**A903_151.0 P132 BE132MA4**	**A903_151.0 P132 BX132MA4**	365
10.1	6454	1.2	144.7	65000	**A803_144.7 S4 ME4LA4**	**A803_144.7 S4 MX4LA4**	361	**A803_144.7 P132 BE132MA4**	**A803_144.7 P132 BX132MA4**	362
10.4	6216	2.1	139.4	75000	**A903_139.4 S4 ME4LA4**	**A903_139.4 S4 MX4LA4**	364	**A903_139.4 P132 BE132MA4**	**A903_139.4 P132 BX132MA4**	365
11.5	5647	2.3	126.6	75000	**A903_126.6 S4 ME4LA4**	**A903_126.6 S4 MX4LA4**	364	**A903_126.6 P132 BE132MA4**	**A903_126.6 P132 BX132MA4**	365
11.6	5601	1.4	125.6	65000	**A803_125.6 S4 ME4LA4**	**A803_125.6 S4 MX4LA4**	361	**A803_125.6 P132 BE132MA4**	**A803_125.6 P132 BX132MA4**	362
12.1	5378	0.9	120.6	50000	**A703_120.6 S4 ME4LA4**	**A703_120.6 S4 MX4LA4**	358	**A703_120.6 P132 BE132MA4**	**A703_120.6 P132 BX132MA4**	359
12.4	5213	2.7	116.9	75000	**A903_116.9 S4 ME4LA4**	**A903_116.9 S4 MX4LA4**	364	**A903_116.9 P132 BE132MA4**	**A903_116.9 P132 BX132MA4**	365
12.5	5170	1.5	116.0	65000	**A803_116.0 S4 ME4LA4**	**A803_116.0 S4 MX4LA4**	361	**A803_116.0 P132 BE132MA4**	**A803_116.0 P132 BX132MA4**	362
13.6	4763	2.9	106.8	75000	**A903_106.8 S4 ME4LA4**	**A903_106.8 S4 MX4LA4**	364	**A903_106.8 P132 BE132MA4**	**A903_106.8 P132 BX132MA4**	365
14.0	4648	1.1	104.2	50000	**A703_104.2 S4 ME4LA4**	**A703_104.2 S4 MX4LA4**	358	**A703_104.2 P132 BE132MA4**	**A703_104.2 P132 BX132MA4**	359
14.0	4639	1.7	104.0	65000	**A803_104.0 S4 ME4LA4**	**A803_104.0 S4 MX4LA4**	361	**A803_104.0 P132 BE132MA4**	**A803_104.0 P132 BX132MA4**	362
14.8	4397	3.2	98.6	75000	**A903_98.6 S4 ME4LA4**	**A903_98.6 S4 MX4LA4**	364	**A903_98.6 P132 BE132MA4**	**A903_98.6 P132 BX132MA4**	365
15.1	4290	1.2	96.2	50000	**A703_96.2 S4 ME4LA4**	**A703_96.2 S4 MX4LA4**	358	**A703_96.2 P132 BE132MA4**	**A703_96.2 P132 BX132MA4**	359
15.2	4282	1.9	96.0	65000	**A803_96.0 S4 ME4LA4**	**A803_96.0 S4 MX4LA4**	361	**A803_96.0 P132 BE132MA4**	**A803_96.0 P132 BX132MA4**	362
16.3	3977	2.0	89.2	65000	**A803_89.2 S4 ME4LA4**	**A803_89.2 S4 MX4LA4**	361	**A803_89.2 P132 BE132MA4**	**A803_89.2 P132 BX132MA4**	362
16.9	3832	1.3	85.9	50000	**A703_85.9 S4 ME4LA4**	**A703_85.9 S4 MX4LA4**	358	**A703_85.9 P132 BE132MA4**	**A703_85.9 P132 BX132MA4**	359
17.7	3671	2.2	82.3	65000	**A803_82.3 S4 ME4LA4**	**A803_82.3 S4 MX4LA4**	361	**A803_82.3 P132 BE132MA4**	**A803_82.3 P132 BX132MA4**	362
18.3	3537	1.4	79.3	50000	**A703_79.3 S4 ME4LA4**	**A703_79.3 S4 MX4LA4**	358	**A703_79.3 P132 BE132MA4**	**A703_79.3 P132 BX132MA4**	359
20.1	3234	1.5	72.5	50000	**A703_72.5 S4 ME4LA4**	**A703_72.5 S4 MX4LA4**	358	**A703_72.5 P132 BE132MA4**	**A703_72.5 P132 BX132MA4**	359
20.1	3227	2.5	72.4	65000	**A803_72.4 S4 ME4LA4**	**A803_72.4 S4 MX4LA4**	361	**A803_72.4 P132 BE132MA4**	**A803_72.4 P132 BX132MA4**	362
20.7	3139	0.9	70.4	30000	**A603_70.4 S4 ME4LA4**	**A603_70.4 S4 MX4LA4**	354	**A603_70.4 P132 BE132MA4**	**A603_70.4 P132 BX132MA4**	355
21.7	2985	1.7	66.9	50000	**A703_66.9 S4 ME4LA4**	**A703_66.9 S4 MX4LA4**	358	**A703_66.9 P132 BE132MA4**	**A703_66.9 P132 BX132MA4**	359
21.8	2979	2.7	66.8	65000	**A803_66.8 S4 ME4LA4**	**A803_66.8 S4 MX4LA4**	361	**A803_66.8 P132 BE132MA4**	**A803_66.8 P132 BX132MA4**	362
22.4	2898	1.0	65.0	30000	**A603_65.0 S4 ME4LA4**	**A603_65.0 S4 MX4LA4**	354	**A603_65.0 P132 BE132MA4**	**A603_65.0 P132 BX132MA4**	355
24.3	2666	3.0	59.8	63800	**A803_59.8 S4 ME4LA4**	**A803_59.8 S4 MX4LA4**	361	**A803_59.8 P132 BE132MA4**	**A803_59.8 P132 BX132MA4**	362
25.2	2571	1.9	57.7	50000	**A703_57.7 S4 ME4LA4**	**A703_57.7 S4 MX4LA4**	358	**A703_57.7 P132 BE132MA4**	**A703_57.7 P132 BX132MA4**	359
26.2	2479	1.1	55.6	30000	**A603_55.6 S4 ME4LA4**	**A603_55.6 S4 MX4LA4**	354	**A603_55.6 P132 BE132MA4**	**A603_55.6 P132 BX132MA4**	355
26.4	2461	3.2	55.2	62600	**A803_55.2 S4 ME4LA4**	**A803_55.2 S4 MX4LA4**	361	**A803_55.2 P132 BE132MA4**	**A803_55.2 P132 BX132MA4**	362
27.3	2374	2.1	53.2	50000	**A703_53.2 S4 ME4LA4**	**A703_53.2 S4 MX4LA4**	358	**A703_53.2 P132 BE132MA4**	**A703_53.2 P132 BX132MA4**	359
28.3	2289	1.2	51.3	30000	**A603_51.3 S4 ME4LA4**	**A603_51.3 S4 MX4LA4**	354	**A603_51.3 P132 BE132MA4**	**A603_51.3 P132 BX132MA4**	355
29.7	2185	2.3	49.0	50000	**A703_49.0 S4 ME4LA4**	**A703_49.0 S4 MX4LA4**	358	**A703_49.0 P132 BE132MA4**	**A703_49.0 P132 BX132MA4**	359

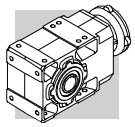

7.5 kW

n_2 min-1	M_2 Nm	S	i	R_{n2} N	IE2	IE3		IEC IE2	IEC IE3	
32	2017	2.4	45.2	50000	**A703_45.2 S4 ME4LA4**	**A703_45.2 S4 MX4LA4**	358	**A703_45.2 P132 BE132MA4**	**A703_45.2 P132 BX132MA4**	359
32	2015	1.4	45.2	30000	**A603_45.2 S4 ME4LA4**	**A603_45.2 S4 MX4LA4**	354	**A603_45.2 P132 BE132MA4**	**A603_45.2 P132 BX132MA4**	355
35	1860	1.5	41.7	30000	**A603_41.7 S4 ME4LA4**	**A603_41.7 S4 MX4LA4**	354	**A603_41.7 P132 BE132MA4**	**A603_41.7 P132 BX132MA4**	355
36	1797	1.1	40.3	30000	**A553_40.3 S4 ME4LA4**	**A553_40.3 S4 MX4LA4**	350	**A553_40.3 P132 BE132MA4**	**A553_40.3 P132 BX132MA4**	351
38	1712	2.8	38.4	50000	**A703_38.4 S4 ME4LA4**	**A703_38.4 S4 MX4LA4**	358	**A703_38.4 P132 BE132MA4**	**A703_38.4 P132 BX132MA4**	359
41	1587	0.9	35.6	10100	**A503_35.6 S4 ME4LA4**	**A503_35.6 S4 MX4LA4**	346	**A503_35.6 P132 BE132MA4**	**A503_35.6 P132 BX132MA4**	347
41	1580	2.8	35.4	50000	**A703_35.4 S4 ME4LA4**	**A703_35.4 S4 MX4LA4**	358	**A703_35.4 P132 BE132MA4**	**A703_35.4 P132 BX132MA4**	359
42	1529	1.8	34.3	30000	**A603_34.3 S4 ME4LA4**	**A603_34.3 S4 MX4LA4**	354	**A603_34.3 P132 BE132MA4**	**A603_34.3 P132 BX132MA4**	355
45	1444	1.0	32.4	10300	**A503_32.4 S4 ME4LA4**	**A503_32.4 S4 MX4LA4**	346	**A503_32.4 P132 BE132MA4**	**A503_32.4 P132 BX132MA4**	347
46	1412	2.0	31.7	30000	**A603_31.7 S4 ME4LA4**	**A603_31.7 S4 MX4LA4**	354	**A603_31.7 P132 BE132MA4**	**A603_31.7 P132 BX132MA4**	355
49	1335	1.5	29.9	30000	**A553_29.9 S4 ME4LA4**	**A553_29.9 S4 MX4LA4**	350	**A553_29.9 P132 BE132MA4**	**A553_29.9 P132 BX132MA4**	351
52	1242	2.3	27.9	30000	**A603_27.9 S4 ME4LA4**	**A603_27.9 S4 MX4LA4**	354	**A603_27.9 P132 BE132MA4**	**A603_27.9 P132 BX132MA4**	355
55	1179	1.3	26.4	10700	**A503_26.4 S4 ME4LA4**	**A503_26.4 S4 MX4LA4**	346	**A503_26.4 P132 BE132MA4**	**A503_26.4 P132 BX132MA4**	347
57	1146	2.4	25.7	30000	**A603_25.7 S4 ME4LA4**	**A603_25.7 S4 MX4LA4**	354	**A603_25.7 P132 BE132MA4**	**A603_25.7 P132 BX132MA4**	355
61	1072	1.4	24.0	10800	**A503_24.0 S4 ME4LA4**	**A503_24.0 S4 MX4LA4**	346	**A503_24.0 P132 BE132MA4**	**A503_24.0 P132 BX132MA4**	347
61	1061	1.8	23.8	28800	**A553_23.8 S4 ME4LA4**	**A553_23.8 S4 MX4LA4**	350	**A553_23.8 P132 BE132MA4**	**A553_23.8 P132 BX132MA4**	351
70	963	1.2	20.9	13700	**A502_20.9 S4 ME4LA4**	**A502_20.9 S4 MX4LA4**	346	**A502_20.9 P132 BE132MA4**	**A502_20.9 P132 BX132MA4**	347
71	949	2.1	20.6	30000	**A602_20.6 S4 ME4LA4**	**A602_20.6 S4 MX4LA4**	354	**A602_20.6 P132 BE132MA4**	**A602_20.6 P132 BX132MA4**	355
76	886	2.0	19.2	28800	**A552_19.2 S4 ME4LA4**	**A552_19.2 S4 MX4LA4**	350	**A552_19.2 P132 BE132MA4**	**A552_19.2 P132 BX132MA4**	351
87	771	2.6	16.7	30000	**A602_16.7 S4 ME4LA4**	**A602_16.7 S4 MX4LA4**	354	**A602_16.7 P132 BE132MA4**	**A602_16.7 P132 BX132MA4**	355
88	763	1.6	16.6	13000	**A502_16.6 S4 ME4LA4**	**A502_16.6 S4 MX4LA4**	346	**A502_16.6 P132 BE132MA4**	**A502_16.6 P132 BX132MA4**	347
93	722	2.5	15.7	27300	**A552_15.7 S4 ME4LA4**	**A552_15.7 S4 MX4LA4**	350	**A552_15.7 P132 BE132MA4**	**A552_15.7 P132 BX132MA4**	351
106	634	0.9	13.8	8130	**A412_13.8 S4 ME4LA4**	**A412_13.8 S4 MX4LA4**	342	**A412_13.8 P132 BE132MA4**	**A412_13.8 P132 BX132MA4**	343
111	604	1.8	13.1	12300	**A502_13.1 S4 ME4LA4**	**A502_13.1 S4 MX4LA4**	346	**A502_13.1 P132 BE132MA4**	**A502_13.1 P132 BX132MA4**	347
111	602	3.0	13.1	26100	**A552_13.1 S4 ME4LA4**	**A552_13.1 S4 MX4LA4**	350	**A552_13.1 P132 BE132MA4**	**A552_13.1 P132 BX132MA4**	351
115	585	3.4	12.7	30000	**A602_12.7 S4 ME4LA4**	**A602_12.7 S4 MX4LA4**	354	**A602_12.7 P132 BE132MA4**	**A602_12.7 P132 BX132MA4**	355
124	541	1.0	11.7	7970	**A412_11.7 S4 ME4LA4**	**A412_11.7 S4 MX4LA4**	342	**A412_11.7 P132 BE132MA4**	**A412_11.7 P132 BX132MA4**	343
144	467	1.1	10.1	7850	**A412_10.1 S4 ME4LA4**	**A412_10.1 S4 MX4LA4**	342	**A412_10.1 P132 BE132MA4**	**A412_10.1 P132 BX132MA4**	343
149	448	2.2	9.7	11500	**A502_9.7 S4 ME4LA4**	**A502_9.7 S4 MX4LA4**	346	**A502_9.7 P132 BE132MA4**	**A502_9.7 P132 BX132MA4**	347
156	429	0.9	9.3	5650	**A352_9.3 S4 ME4LA4**	**A352_9.3 S4 MX4LA4**	338	**A352_9.3 P132 BE132MA4**	**A352_9.3 P132 BX132MA4**	339
158	424	1.3	9.2	7710	**A412_9.2 S4 ME4LA4**	**A412_9.2 S4 MX4LA4**	342	**A412_9.2 P132 BE132MA4**	**A412_9.2 P132 BX132MA4**	343
172	390	1.0	8.5	5600	**A352_8.5 S4 ME4LA4**	**A352_8.5 S4 MX4LA4**	338	**A352_8.5 P132 BE132MA4**	**A352_8.5 P132 BX132MA4**	339
175	384	1.4	8.3	7590	**A412_8.3 S4 ME4LA4**	**A412_8.3 S4 MX4LA4**	342	**A412_8.3 P132 BE132MA4**	**A412_8.3 P132 BX132MA4**	343
188	356	2.7	7.7	10800	**A502_7.7 S4 ME4LA4**	**A502_7.7 S4 MX4LA4**	346	**A502_7.7 P132 BE132MA4**	**A502_7.7 P132 BX132MA4**	347
204	328	1.7	7.1	7370	**A412_7.1 S4 ME4LA4**	**A412_7.1 S4 MX4LA4**	342	**A412_7.1 P132 BE132MA4**	**A412_7.1 P132 BX132MA4**	343
207	323	1.1	7.0	5490	**A352_7.0 S4 ME4LA4**	**A352_7.0 S4 MX4LA4**	338	**A352_7.0 P132 BE132MA4**	**A352_7.0 P132 BX132MA4**	339
227	295	1.2	6.4	5420	**A352_6.4 S4 ME4LA4**	**A352_6.4 S4 MX4LA4**	338	**A352_6.4 P132 BE132MA4**	**A352_6.4 P132 BX132MA4**	339
269	249	1.4	5.4	5270	**A352_5.4 S4 ME4LA4**	**A352_5.4 S4 MX4LA4**	338	**A352_5.4 P132 BE132MA4**	**A352_5.4 P132 BX132MA4**	339
277	242	2.3	5.2	6920	**A412_5.2 S4 ME4LA4**	**A412_5.2 S4 MX4LA4**	342	**A412_5.2 P132 BE132MA4**	**A412_5.2 P132 BX132MA4**	343
318	212	2.5	9.2	6710	**A412_9.2 S4 ME4LA2**		342	**A412_9.2 P132 BE132SB2**		343
351	192	2.7	8.3	6550	**A412_8.3 S4 ME4LA2**		342	**A412_8.3 P132 BE132SB2**		343
416	162	2.3	7.0	4830	**A352_7.0 S4 ME4LA2**		338	**A352_7.0 P132 BE132SB2**		339
540	125	2.7	5.4	4550	**A352_5.4 S4 ME4LA2**		338	**A352_5.4 P132 BE132SB2**		339

7.5 kW

n_2 min-1	M_2 Nm	S	i	R_{n2} N	IE3		IEC IE3	
4.1	15516	0.9	355.8	75000			**A904_355.8 P132 BXN132M4**	365
4.8	13296	1.1	304.9	75000			**A904_304.9 P132 BXN132M4**	365
5.2	12273	1.1	281.4	75000			**A904_281.4 P132 BXN132M4**	365
6.4	9875	1.4	226.4	75000			**A904_226.4 P132 BXN132M4**	365
7.0	9115	1.5	209.0	75000			**A904_209.0 P132 BXN132M4**	365
8.1	7849	1.8	180.0	75000			**A904_180.0 P132 BXN132M4**	365
8.5	7470	1.1	171.3	65000			**A804_171.3 P132 BXN132M4**	362
8.8	7245	1.9	166.1	75000			**A904_166.1 P132 BXN132M4**	365
9.3	6992	1.1	156.8	65000			**A803_156.8 P132 BXN132M4**	362
9.6	6733	2.0	151.0	75000			**A903_151.0 P132 BXN132M4**	365
10.1	6454	1.2	144.7	65000			**A803_144.7 P132 BXN132M4**	362
10.4	6216	2.1	139.4	75000			**A903_139.4 P132 BXN132M4**	365
11.5	5647	2.3	126.6	75000			**A903_126.6 P132 BXN132M4**	365
11.6	5601	1.4	125.6	65000			**A803_125.6 P132 BXN132M4**	362

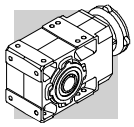

7.5 kW

n_2 min-1	M_2 Nm	S	i	R_{n2} N	IE3		IEC IE3	
12.1	5378	0.9	120.6	50000			**A703_120.6 P132 BXN132M4**	359
12.4	5213	2.7	116.9	75000			**A903_116.9 P132 BXN132M4**	365
12.5	5170	1.5	116.0	65000			**A803_116.0 P132 BXN132M4**	362
13.6	4763	2.9	106.8	75000			**A903_106.8 P132 BXN132M4**	365
14.0	4648	1.1	104.2	50000			**A703_104.2 P132 BXN132M4**	359
14.0	4639	1.7	104.0	65000			**A803_104.0 P132 BXN132M4**	362
14.8	4397	3.2	98.6	75000			**A903_98.6 P132 BXN132M4**	365
15.1	4290	1.2	96.2	50000			**A703_96.2 P132 BXN132M4**	359
15.2	4282	1.9	96.0	65000			**A803_96.0 P132 BXN132M4**	362
16.3	3977	2.0	89.2	65000			**A803_89.2 P132 BXN132M4**	362
16.9	3832	1.3	85.9	50000			**A703_85.9 P132 BXN132M4**	359
17.7	3671	2.2	82.3	65000			**A803_82.3 P132 BXN132M4**	362
18.3	3537	1.4	79.3	50000			**A703_79.3 P132 BXN132M4**	359
20.1	3234	1.5	72.5	50000			**A703_72.5 P132 BXN132M4**	359
20.1	3227	2.5	72.4	65000			**A803_72.4 P132 BXN132M4**	362
20.7	3139	0.9	70.4	30000			**A603_70.4 P132 BXN132M4**	355
21.7	2985	1.7	66.9	50000			**A703_66.9 P132 BXN132M4**	359
21.8	2979	2.7	66.8	65000			**A803_66.8 P132 BXN132M4**	362
22.4	2898	1.0	65.0	30000			**A603_65.0 P132 BXN132M4**	355
24.3	2666	3.0	59.8	63800			**A803_59.8 P132 BXN132M4**	362
25.2	2571	1.9	57.7	50000			**A703_57.7 P132 BXN132M4**	359
26.2	2479	1.1	55.6	30000			**A603_55.6 P132 BXN132M4**	355
26.4	2461	3.2	55.2	62600			**A803_55.2 P132 BXN132M4**	362
27.3	2374	2.1	53.2	50000			**A703_53.2 P132 BXN132M4**	359
28.3	2289	1.2	51.3	30000			**A603_51.3 P132 BXN132M4**	355
29.7	2185	2.3	49.0	50000			**A703_49.0 P132 BXN132M4**	359
32	2017	2.4	45.2	50000			**A703_45.2 P132 BXN132M4**	359
32	2015	1.4	45.2	30000			**A603_45.2 P132 BXN132M4**	355
35	1860	1.5	41.7	30000			**A603_41.7 P132 BXN132M4**	355
36	1797	1.1	40.3	30000			**A553_40.3 P132 BXN132M4**	351
38	1712	2.8	38.4	50000			**A703_38.4 P132 BXN132M4**	359
41	1587	0.9	35.6	10100			**A503_35.6 P132 BXN132M4**	347
41	1580	2.8	35.4	50000			**A703_35.4 P132 BXN132M4**	359
42	1529	1.8	34.3	30000			**A603_34.3 P132 BXN132M4**	355
45	1444	1.0	32.4	10300			**A503_32.4 P132 BXN132M4**	347
46	1412	2.0	31.7	30000			**A603_31.7 P132 BXN132M4**	355
49	1335	1.5	29.9	30000			**A553_29.9 P132 BXN132M4**	351
52	1242	2.3	27.9	30000			**A603_27.9 P132 BXN132M4**	355
55	1179	1.3	26.4	10700			**A503_26.4 P132 BXN132M4**	347
57	1146	2.4	25.7	30000			**A603_25.7 P132 BXN132M4**	355
61	1072	1.4	24.0	10800			**A503_24.0 P132 BXN132M4**	347
61	1061	1.8	23.8	28800			**A553_23.8 P132 BXN132M4**	351
70	963	1.2	20.9	13700			**A502_20.9 P132 BXN132M4**	347
71	949	2.1	20.6	30000			**A602_20.6 P132 BXN132M4**	355
76	886	2.0	19.2	28800			**A552_19.2 P132 BXN132M4**	351
87	771	2.6	16.7	30000			**A602_16.7 P132 BXN132M4**	355
88	763	1.6	16.6	13000			**A502_16.6 P132 BXN132M4**	347
93	722	2.5	15.7	27300			**A552_15.7 P132 BXN132M4**	351
106	634	0.9	13.8	8130			**A412_13.8 P132 BXN132M4**	343
111	604	1.8	13.1	12300			**A502_13.1 P132 BXN132M4**	347
111	602	3.0	13.1	26100			**A552_13.1 P132 BXN132M4**	351
115	585	3.4	12.7	30000			**A602_12.7 P132 BXN132M4**	355
124	541	1.0	11.7	7970			**A412_11.7 P132 BXN132M4**	343
144	467	1.1	10.1	7850			**A412_10.1 P132 BXN132M4**	343
149	448	2.2	9.7	11500			**A502_9.7 P132 BXN132M4**	347
156	429	0.9	9.3	5650			**A352_9.3 P132 BXN132M4**	339
158	424	1.3	9.2	7710			**A412_9.2 P132 BXN132M4**	343
172	390	1.0	8.5	5600			**A352_8.5 P132 BXN132M4**	339
175	384	1.4	8.3	7590			**A412_8.3 P132 BXN132M4**	343
188	356	2.7	7.7	10800			**A502_7.7 P132 BXN132M4**	347
204	328	1.7	7.1	7370			**A412_7.1 P132 BXN132M4**	343
207	323	1.1	7.0	5490			**A352_7.0 P132 BXN132M4**	339
227	295	1.2	6.4	5420			**A352_6.4 P132 BXN132M4**	339
269	249	1.4	5.4	5270			**A352_5.4 P132 BXN132M4**	339
277	242	2.3	5.2	6920			**A412_5.2 P132 BXN132M4**	343

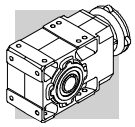

9.2 kW

n_2 min-1	M_2 Nm	S	i	R_{n2} N	IE2	IE3		IEC IE2	IEC IE3	
5.2	15279	0.9	281.4	75000	**A904_281.4 S4 ME4LB4**		364	**A904_281.4 P132 BE132MB4**	**A904_281.4 P160 BX160MA4**	365
6.4	12293	1.1	226.4	75000	**A904_226.4 S4 ME4LB4**		364	**A904_226.4 P132 BE132MB4**	**A904_226.4 P160 BX160MA4**	365
6.9	11347	1.2	209.0	75000	**A904_209.0 S4 ME4LB4**		364	**A904_209.0 P132 BE132MB4**	**A904_209.0 P160 BX160MA4**	365
8.1	9771	1.4	180.0	75000	**A904_180.0 S4 ME4LB4**		364	**A904_180.0 P132 BE132MB4**	**A904_180.0 P160 BX160MA4**	365
8.5	9300	0.9	171.3	65000	**A804_171.3 S4 ME4LB4**		361	**A804_171.3 P132 BE132MB4**		362
8.7	9019	1.6	166.1	75000	**A904_166.1 S4 ME4LB4**		364	**A904_166.1 P132 BE132MB4**	**A904_166.1 P160 BX160MA4**	365
9.2	8704	0.9	156.8	65000	**A803_156.8 S4 ME4LB4**	**A803_156.8 S5 MX5SA4**	361	**A803_156.8 P132 BE132MB4**	**A803_156.8 P160 BX160MA4**	362
9.6	8383	1.6	151.0	75000	**A903_151.0 S4 ME4LB4**	**A903_151.0 S5 MX5SA4**	364	**A903_151.0 P132 BE132MB4**	**A903_151.0 P160 BX160MA4**	365
10.0	8034	1.0	144.7	65000	**A803_144.7 S4 ME4LB4**	**A803_144.7 S5 MX5SA4**	361	**A803_144.7 P132 BE132MB4**	**A803_144.7 P160 BX160MA4**	362
10.4	7738	1.6	139.4	75000	**A903_139.4 S4 ME4LB4**	**A903_139.4 S5 MX5SA4**	364	**A903_139.4 P132 BE132MB4**	**A903_139.4 P160 BX160MA4**	365
11.4	7030	1.9	126.6	75000	**A903_126.6 S4 ME4LB4**	**A903_126.6 S5 MX5SA4**	364	**A903_126.6 P132 BE132MB4**	**A903_126.6 P160 BX160MA4**	365
11.5	6973	1.1	125.6	65000	**A803_125.6 S4 ME4LB4**	**A803_125.6 S5 MX5SA4**	361	**A803_125.6 P132 BE132MB4**	**A803_125.6 P160 BX160MA4**	362
12.4	6489	2.2	116.9	75000	**A903_116.9 S4 ME4LB4**	**A903_116.9 S5 MX5SA4**	364	**A903_116.9 P132 BE132MB4**	**A903_116.9 P160 BX160MA4**	365
12.5	6437	1.2	116.0	65000	**A803_116.0 S4 ME4LB4**	**A803_116.0 S5 MX5SA4**	361	**A803_116.0 P132 BE132MB4**	**A803_116.0 P160 BX160MA4**	362
13.6	5930	2.4	106.8	75000	**A903_106.8 S4 ME4LB4**	**A903_106.8 S5 MX5SA4**	364	**A903_106.8 P132 BE132MB4**	**A903_106.8 P160 BX160MA4**	365
13.9	5775	1.4	104.0	65000	**A803_104.0 S4 ME4LB4**	**A803_104.0 S5 MX5SA4**	361	**A803_104.0 P132 BE132MB4**	**A803_104.0 P160 BX160MA4**	362
14.7	5473	2.6	98.6	75000	**A903_98.6 S4 ME4LB4**	**A903_98.6 S5 MX5SA4**	364	**A903_98.6 P132 BE132MB4**	**A903_98.6 P160 BX160MA4**	365
15.1	5341	0.9	96.2	50000	**A703_96.2 S4 ME4LB4**	**A703_96.2 S5 MX5SA4**	358	**A703_96.2 P132 BE132MB4**	**A703_96.2 P160 BX160MA4**	359
15.1	5331	1.5	96.0	65000	**A803_96.0 S4 ME4LB4**	**A803_96.0 S5 MX5SA4**	361	**A803_96.0 P132 BE132MB4**	**A803_96.0 P160 BX160MA4**	362
16.3	4950	1.6	89.2	65000	**A803_89.2 S4 ME4LB4**	**A803_89.2 S5 MX5SA4**	361	**A803_89.2 P132 BE132MB4**	**A803_89.2 P160 BX160MA4**	362
16.7	4833	2.9	87.1	75000	**A903_87.1 S4 ME4LB4**	**A903_87.1 S5 MX5SA4**	364	**A903_87.1 P132 BE132MB4**	**A903_87.1 P160 BX160MA4**	365
16.9	4770	1.0	85.9	50000	**A703_85.9 S4 ME4LB4**	**A703_85.9 S5 MX5SA4**	358	**A703_85.9 P132 BE132MB4**	**A703_85.9 P160 BX160MA4**	359
17.6	4570	1.8	82.3	65000	**A803_82.3 S4 ME4LB4**	**A803_82.3 S5 MX5SA4**	361	**A803_82.3 P132 BE132MB4**	**A803_82.3 P160 BX160MA4**	362
18.0	4461	3.1	80.4	75000	**A903_80.4 S4 ME4LB4**	**A903_80.4 S5 MX5SA4**	364	**A903_80.4 P132 BE132MB4**	**A903_80.4 P160 BX160MA4**	365
18.3	4403	1.1	79.3	50000	**A703_79.3 S4 ME4LB4**	**A703_79.3 S5 MX5SA4**	358	**A703_79.3 P132 BE132MB4**	**A703_79.3 P160 BX160MA4**	359
19.5	4134	3.4	74.5	75000	**A903_74.5 S4 ME4LB4**	**A903_74.5 S5 MX5SA4**	364	**A903_74.5 P132 BE132MB4**	**A903_74.5 P160 BX160MA4**	365
20.0	4026	1.2	72.5	50000	**A703_72.5 S4 ME4LB4**	**A703_72.5 S5 MX5SA4**	358	**A703_72.5 P132 BE132MB4**	**A703_72.5 P160 BX160MA4**	359
20.0	4017	2.0	72.4	65000	**A803_72.4 S4 ME4LB4**	**A803_72.4 S5 MX5SA4**	361	**A803_72.4 P132 BE132MB4**	**A803_72.4 P160 BX160MA4**	362
21.7	3716	1.3	66.9	50000	**A703_66.9 S4 ME4LB4**	**A703_66.9 S5 MX5SA4**	358	**A703_66.9 P132 BE132MB4**	**A703_66.9 P160 BX160MA4**	359
21.7	3708	2.2	66.8	63800	**A803_66.8 S4 ME4LB4**	**A803_66.8 S5 MX5SA4**	361	**A803_66.8 P132 BE132MB4**	**A803_66.8 P160 BX160MA4**	362
24.3	3318	2.4	59.8	62400	**A803_59.8 S4 ME4LB4**	**A803_59.8 S5 MX5SA4**	361	**A803_59.8 P132 BE132MB4**	**A803_59.8 P160 BX160MA4**	362
25.1	3201	1.6	57.7	50000	**A703_57.7 S4 ME4LB4**	**A703_57.7 S5 MX5SA4**	358	**A703_57.7 P132 BE132MB4**	**A703_57.7 P160 BX160MA4**	359
26.1	3087	0.9	55.6	30000	**A603_55.6 S4 ME4LB4**	**A603_55.6 S5 MX5SA4**	354	**A603_55.6 P132 BE132MB4**	**A603_55.6 P160 BX160MA4**	355
26.3	3063	2.6	55.2	61300	**A803_55.2 S4 ME4LB4**	**A803_55.2 S5 MX5SA4**	361	**A803_55.2 P132 BE132MB4**	**A803_55.2 P160 BX160MA4**	362
27.2	2955	1.7	53.2	50000	**A703_53.2 S4 ME4LB4**	**A703_53.2 S5 MX5SA4**	358	**A703_53.2 P132 BE132MB4**	**A703_53.2 P160 BX160MA4**	359
28.3	2849	1.0	51.3	30000	**A603_51.3 S4 ME4LB4**	**A603_51.3 S5 MX5SA4**	354	**A603_51.3 P132 BE132MB4**	**A603_51.3 P160 BX160MA4**	355
29.6	2720	1.8	49.0	50000	**A703_49.0 S4 ME4LB4**	**A703_49.0 S5 MX5SA4**	358	**A703_49.0 P132 BE132MB4**	**A703_49.0 P160 BX160MA4**	359
30	2675	3.0	48.2	59500	**A803_48.2 S4 ME4LB4**	**A803_48.2 S5 MX5SA4**	361	**A803_48.2 P132 BE132MB4**	**A803_48.2 P160 BX160MA4**	362
32	2511	1.9	45.2	50000	**A703_45.2 S4 ME4LB4**	**A703_45.2 S5 MX5SA4**	358	**A703_45.2 P132 BE132MB4**	**A703_45.2 P160 BX160MA4**	359
32	2508	1.1	45.2	30000	**A603_45.2 S4 ME4LB4**	**A603_45.2 S5 MX5SA4**	354	**A603_45.2 P132 BE132MB4**	**A603_45.2 P160 BX160MA4**	355
33	2469	3.0	44.5	58400	**A803_44.5 S4 ME4LB4**	**A803_44.5 S5 MX5SA4**	361	**A803_44.5 P132 BE132MB4**	**A803_44.5 P160 BX160MA4**	362
35	2315	1.2	41.7	30000	**A603_41.7 S4 ME4LB4**	**A603_41.7 S5 MX5SA4**	354	**A603_41.7 P132 BE132MB4**	**A603_41.7 P160 BX160MA4**	355
38	2131	2.3	38.4	50000	**A703_38.4 S4 ME4LB4**	**A703_38.4 S5 MX5SA4**	358	**A703_38.4 P132 BE132MB4**	**A703_38.4 P160 BX160MA4**	359
41	1967	2.3	35.4	50000	**A703_35.4 S4 ME4LB4**	**A703_35.4 S5 MX5SA4**	358	**A703_35.4 P132 BE132MB4**	**A703_35.4 P160 BX160MA4**	359
42	1904	1.5	34.3	30000	**A603_34.3 S4 ME4LB4**	**A603_34.3 S5 MX5SA4**	354	**A603_34.3 P132 BE132MB4**	**A603_34.3 P160 BX160MA4**	355
46	1758	1.6	31.7	30000	**A603_31.7 S4 ME4LB4**	**A603_31.7 S5 MX5SA4**	354	**A603_31.7 P132 BE132MB4**	**A603_31.7 P160 BX160MA4**	355
48	1661	1.2	29.9	29100	**A553_29.9 S4 ME4LB4**	**A553_29.9 S5 MX5SA4**	350	**A553_29.9 P132 BE132MB4**	**A553_29.9 P160 BX160MA4**	351
52	1546	1.8	27.9	30000	**A603_27.9 S4 ME4LB4**	**A603_27.9 S5 MX5SA4**	354	**A603_27.9 P132 BE132MB4**	**A603_27.9 P160 BX160MA4**	355
55	1468	1.0	26.4	9130	**A503_26.4 S4 ME4LB4**	**A503_26.4 S5 MX5SA4**	346	**A503_26.4 P132 BE132MB4**	**A503_26.4 P160 BX160MA4**	347
56	1427	2.0	25.7	30000	**A603_25.7 S4 ME4LB4**	**A603_25.7 S5 MX5SA4**	354	**A603_25.7 P132 BE132MB4**	**A603_25.7 P160 BX160MA4**	355
60	1335	1.1	24.0	9370	**A503_24.0 S4 ME4LB4**	**A503_24.0 S5 MX5SA4**	346	**A503_24.0 P132 BE132MB4**	**A503_24.0 P160 BX160MA4**	347
61	1321	1.5	23.8	27900	**A553_23.8 S4 ME4LB4**	**A553_23.8 S5 MX5SA4**	350	**A553_23.8 P132 BE132MB4**	**A553_23.8 P160 BX160MA4**	351
68	1183	3.4	21.3	46000	**A703_21.3 S4 ME4LB4**	**A703_21.3 S5 MX5SA4**	358	**A703_21.3 P132 BE132MB4**	**A703_21.3 P160 BX160MA4**	359

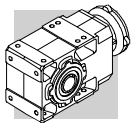

9.2 kW

n_2 min-1	M_2 Nm	S	i	R_{n2} N	IE2	IE3		IEC IE2	IEC IE3	
69	1199	1.0	20.9	13000	**A502_20.9 S4 ME4LB4**	**A502_20.9 S5 MX5SA4**	346	**A502_20.9 P132 BE132MB4**	**A502_20.9 P160 BX160MA4**	347
70	1181	1.7	20.6	30000	**A602_20.6 S4 ME4LB4**	**A602_20.6 S5 MX5SA4**	354	**A602_20.6 P132 BE132MB4**	**A602_20.6 P160 BX160MA4**	355
74	1092	3.4	19.7	45100	**A703_19.7 S4 ME4LB4**	**A703_19.7 S5 MX5SA4**	358	**A703_19.7 P132 BE132MB4**	**A703_19.7 P160 BX160MA4**	359
75	1103	1.6	19.2	28400	**A552_19.2 S4 ME4LB4**	**A552_19.2 S5 MX5SA4**	350	**A552_19.2 P132 BE132MB4**	**A552_19.2 P160 BX160MA4**	351
87	960	2.1	16.7	30000	**A602_16.7 S4 ME4LB4**	**A602_16.7 S5 MX5SA4**	354	**A602_16.7 P132 BE132MB4**	**A602_16.7 P160 BX160MA4**	355
88	950	1.3	16.6	12500	**A502_16.6 S4 ME4LB4**	**A502_16.6 S5 MX5SA4**	346	**A502_16.6 P132 BE132MB4**	**A502_16.6 P160 BX160MA4**	347
92	899	2.0	15.7	27000	**A552_15.7 S4 ME4LB4**	**A552_15.7 S5 MX5SA4**	350	**A552_15.7 P132 BE132MB4**	**A552_15.7 P160 BX160MA4**	351
111	752	1.5	13.1	11900	**A502_13.1 S4 ME4LB4**	**A502_13.1 S5 MX5SA4**	346	**A502_13.1 P132 BE132MB4**	**A502_13.1 P160 BX160MA4**	347
111	750	2.4	13.1	25800	**A552_13.1 S4 ME4LB4**	**A552_13.1 S5 MX5SA4**	350	**A552_13.1 P132 BE132MB4**	**A552_13.1 P160 BX160MA4**	351
114	728	2.7	12.7	30000	**A602_12.7 S4 ME4LB4**	**A602_12.7 S5 MX5SA4**	354	**A602_12.7 P132 BE132MB4**	**A602_12.7 P160 BX160MA4**	355
123	651	2.5	23.8	24100	**A553_23.8 S4 ME4LB2**	**A553_23.8 S5 ME4LB2**	350	**A553_23.8 P132 BE132MB2**	**A553_23.8 P160 BE132MB2**	351
140	594	3.0	10.4	24200	**A552_10.4 S4 ME4LB4**	**A552_10.4 S5 MX5SA4**	350	**A552_10.4 P132 BE132MB4**	**A552_10.4 P160 BX160MA4**	351
141	592	3.4	10.3	30000	**A602_10.3 S4 ME4LB4**	**A602_10.3 S5 MX5SA4**	354	**A602_10.3 P132 BE132MB4**	**A602_10.3 P160 BX160MA4**	355
143	581	0.9	10.1	7340	**A412_10.1 S4 ME4LB4**		342	**A412_10.1 P132 BE132MB4**		343
149	558	1.8	9.7	11200	**A502_9.7 S4 ME4LB4**	**A502_9.7 S5 MX5SA4**	346	**A502_9.7 P132 BE132MB4**	**A502_9.7 P160 BX160MA4**	347
158	527	1.0	9.2	7250	**A412_9.2 S4 ME4LB4**		342	**A412_9.2 P132 BE132MB4**		343
174	478	1.2	8.3	7170	**A412_8.3 S4 ME4LB4**		342	**A412_8.3 P132 BE132MB4**		343
187	444	2.1	7.7	10600	**A502_7.7 S4 ME4LB4**	**A502_7.7 S5 MX5SA4**	346	**A502_7.7 P132 BE132MB4**	**A502_7.7 P160 BX160MA4**	347
204	408	1.3	7.1	7020	**A412_7.1 S4 ME4LB4**		342	**A412_7.1 P132 BE132MB4**		343
206	403	0.9	7.0	5110	**A352_7.0 S4 ME4LB4**		338	**A352_7.0 P132 BE132MB4**		339
226	368	1.0	6.4	5070	**A352_6.4 S4 ME4LB4**		338	**A352_6.4 P132 BE132MB4**		339
268	310	1.1	5.4	4980	**A352_5.4 S4 ME4LB4**		338	**A352_5.4 P132 BE132MB4**		339
276	301	1.8	5.2	6660	**A412_5.2 S4 ME4LB4**		342	**A412_5.2 P132 BE132MB4**		343
317	260	2.0	9.2	6480	**A412_9.2 S4 ME4LB2**		342	**A412_9.2 P132 BE132MB2**		343
377	219	3.4	7.7	8780	**A502_7.7 S4 ME4LB2**		346	**A502_7.7 P132 BE132MB2**		347
539	153	2.2	5.4	4410	**A352_5.4 S4 ME4LB2**		338	**A352_5.4 P132 BE132MB2**		339
557	148	3.0	5.2	5690	**A412_5.2 S4 ME4LB2**		342	**A412_5.2 P132 BE132MB2**		343

11 kW

n_2 min-1	M_2 Nm	S	i	R_{n2} N	IE2	IE3		IEC IE2	IEC IE3	
6.5	14510	1.0	226.4	75000	**A904_226.4 S5 ME5SA4**	**A904_226.4 S5 MX5SB4**	364	**A904_226.4 P160 BE160M4**	**A904_226.4 P160 BX160MB4**	365
7.0	13393	1.0	209.0	75000	**A904_209.0 S5 ME5SA4**	**A904_209.0 S5 MX5SB4**	364	**A904_209.0 P160 BE160M4**	**A904_209.0 P160 BX160MB4**	365
8.2	11533	1.2	180.0	75000	**A904_180.0 S5 ME5SA4**	**A904_180.0 S5 MX5SB4**	364	**A904_180.0 P160 BE160M4**	**A904_180.0 P160 BX160MB4**	365
8.8	10645	1.3	166.1	75000	**A904_166.1 S5 ME5SA4**	**A904_166.1 S5 MX5SB4**	364	**A904_166.1 P160 BE160M4**	**A904_166.1 P160 BX160MB4**	365
9.7	9894	1.4	151.0	75000	**A903_151.0 S5 ME5SA4**	**A903_151.0 S5 MX5SB4**	364	**A903_151.0 P160 BE160M4**	**A903_151.0 P160 BX160MB4**	365
10.5	9133	1.4	139.4	75000	**A903_139.4 S5 ME5SA4**	**A903_139.4 S5 MX5SB4**	364	**A903_139.4 P160 BE160M4**	**A903_139.4 P160 BX160MB4**	365
11.6	8298	1.6	126.6	75000	**A903_126.6 S5 ME5SA4**	**A903_126.6 S5 MX5SB4**	364	**A903_126.6 P160 BE160M4**	**A903_126.6 P160 BX160MB4**	365
11.7	8231	1.0	125.6	65000	**A803_125.6 S5 ME5SA4**	**A803_125.6 S5 MX5SB4**	361	**A803_125.6 P160 BE160M4**	**A803_125.6 P160 BX160MB4**	362
12.6	7660	1.8	116.9	75000	**A903_116.9 S5 ME5SA4**	**A903_116.9 S5 MX5SB4**	364	**A903_116.9 P160 BE160M4**	**A903_116.9 P160 BX160MB4**	365
12.7	7597	1.1	116.0	65000	**A803_116.0 S5 ME5SA4**	**A803_116.0 S5 MX5SB4**	361	**A803_116.0 P160 BE160M4**	**A803_116.0 P160 BX160MB4**	362
13.8	6999	2.0	106.8	75000	**A903_106.8 S5 ME5SA4**	**A903_106.8 S5 MX5SB4**	364	**A903_106.8 P160 BE160M4**	**A903_106.8 P160 BX160MB4**	365
14.1	6816	1.2	104.0	65000	**A803_104.0 S5 ME5SA4**	**A803_104.0 S5 MX5SB4**	361	**A803_104.0 P160 BE160M4**	**A803_104.0 P160 BX160MB4**	362
14.9	6460	2.2	98.6	75000	**A903_98.6 S5 ME5SA4**	**A903_98.6 S5 MX5SB4**	364	**A903_98.6 P160 BE160M4**	**A903_98.6 P160 BX160MB4**	365
15.3	6292	1.3	96.0	65000	**A803_96.0 S5 ME5SA4**	**A803_96.0 S5 MX5SB4**	361	**A803_96.0 P160 BE160M4**	**A803_96.0 P160 BX160MB4**	362

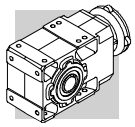

11 kW

n_2	M_2	S	i	R_{n2}	IE2	IE3		IEC IE2	IEC IE3	
min-1	Nm			N						
16.5	5843	1.4	89.2	65000	**A803_89.2 S5 ME5SA4**	**A803_89.2 S5 MX5SB4**	361	**A803_89.2 P160 BE160M4**	**A803_89.2 P160 BX160MB4**	362
16.9	5705	2.5	87.1	75000	**A903_87.1 S5 ME5SA4**	**A903_87.1 S5 MX5SB4**	364	**A903_87.1 P160 BE160M4**	**A903_87.1 P160 BX160MB4**	365
17.9	5394	1.5	82.3	64500	**A803_82.3 S5 ME5SA4**	**A803_82.3 S5 MX5SB4**	361	**A803_82.3 P160 BE160M4**	**A803_82.3 P160 BX160MB4**	362
18.3	5266	2.7	80.4	75000	**A903_80.4 S5 ME5SA4**	**A903_80.4 S5 MX5SB4**	364	**A903_80.4 P160 BE160M4**	**A903_80.4 P160 BX160MB4**	365
18.5	5198	1.0	79.3	50000	**A703_79.3 S5 ME5SA4**	**A703_79.3 S5 MX5SB4**	358	**A703_79.3 P160 BE160M4**	**A703_79.3 P160 BX160MB4**	359
19.7	4880	2.9	74.5	75000	**A903_74.5 S5 ME5SA4**	**A903_74.5 S5 MX5SB4**	364	**A903_74.5 P160 BE160M4**	**A903_74.5 P160 BX160MB4**	365
20.3	4752	1.1	72.5	50000	**A703_72.5 S5 ME5SA4**	**A703_72.5 S5 MX5SB4**	358	**A703_72.5 P160 BE160M4**	**A703_72.5 P160 BX160MB4**	359
20.3	4742	1.7	72.4	63200	**A803_72.4 S5 ME5SA4**	**A803_72.4 S5 MX5SB4**	361	**A803_72.4 P160 BE160M4**	**A803_72.4 P160 BX160MB4**	362
21.4	4505	3.1	68.8	75000	**A903_68.8 S5 ME5SA4**	**A903_68.8 S5 MX5SB4**	364	**A903_68.8 P160 BE160M4**	**A903_68.8 P160 BX160MB4**	365
22.0	4386	1.1	66.9	50000	**A703_66.9 S5 ME5SA4**	**A703_66.9 S5 MX5SB4**	358	**A703_66.9 P160 BE160M4**	**A703_66.9 P160 BX160MB4**	359
22.0	4377	1.8	66.8	62200	**A803_66.8 S5 ME5SA4**	**A803_66.8 S5 MX5SB4**	361	**A803_66.8 P160 BE160M4**	**A803_66.8 P160 BX160MB4**	362
24.6	3917	2.0	59.8	60900	**A803_59.8 S5 ME5SA4**	**A803_59.8 S5 MX5SB4**	361	**A803_59.8 P160 BE160M4**	**A803_59.8 P160 BX160MB4**	362
24.7	3906	3.6	59.6	75000	**A903_59.6 S5 ME5SA4**	**A903_59.6 S5 MX5SB4**	364	**A903_59.6 P160 BE160M4**	**A903_59.6 P160 BX160MB4**	365
25.5	3778	1.3	57.7	50000	**A703_57.7 S5 ME5SA4**	**A703_57.7 S5 MX5SB4**	358	**A703_57.7 P160 BE160M4**	**A703_57.7 P160 BX160MB4**	359
26.6	3615	2.2	55.2	59900	**A803_55.2 S5 ME5SA4**	**A803_55.2 S5 MX5SB4**	361	**A803_55.2 P160 BE160M4**	**A803_55.2 P160 BX160MB4**	362
27.6	3488	1.4	53.2	50000	**A703_53.2 S5 ME5SA4**	**A703_53.2 S5 MX5SB4**	358	**A703_53.2 P160 BE160M4**	**A703_53.2 P160 BX160MB4**	359
30	3210	1.6	49.0	50000	**A703_49.0 S5 ME5SA4**	**A703_49.0 S5 MX5SB4**	358	**A703_49.0 P160 BE160M4**	**A703_49.0 P160 BX160MB4**	359
31	3157	2.5	48.2	58300	**A803_48.2 S5 ME5SA4**	**A803_48.2 S5 MX5SB4**	361	**A803_48.2 P160 BE160M4**	**A803_48.2 P160 BX160MB4**	362
33	2964	1.6	45.2	50000	**A703_45.2 S5 ME5SA4**	**A703_45.2 S5 MX5SB4**	358	**A703_45.2 P160 BE160M4**	**A703_45.2 P160 BX160MB4**	359
33	2961	0.9	45.2	30000	**A603_45.2 S5 ME5SA4**	**A603_45.2 S5 MX5SB4**	354	**A603_45.2 P160 BE160M4**	**A603_45.2 P160 BX160MB4**	355
33	2914	2.6	44.5	57300	**A803_44.5 S5 ME5SA4**	**A803_44.5 S5 MX5SB4**	361	**A803_44.5 P160 BE160M4**	**A803_44.5 P160 BX160MB4**	362
35	2733	1.0	41.7	30000	**A603_41.7 S5 ME5SA4**	**A603_41.7 S5 MX5SB4**	354	**A603_41.7 P160 BE160M4**	**A603_41.7 P160 BX160MB4**	355
38	2523	3.0	38.5	55500				**A803_38.5 P160 BE160M4**	**A803_38.5 P160 BX160MB4**	362
38	2515	1.9	38.4	50000	**A703_38.4 S5 ME5SA4**	**A703_38.4 S5 MX5SB4**	358	**A703_38.4 P160 BE160M4**	**A703_38.4 P160 BX160MB4**	359
41	2328	3.0	35.5	54500				**A803_35.5 P160 BE160M4**	**A803_35.5 P160 BX160MB4**	362
41	2321	1.9	35.4	50000	**A703_35.4 S5 ME5SA4**	**A703_35.4 S5 MX5SB4**	358	**A703_35.4 P160 BE160M4**	**A703_35.4 P160 BX160MB4**	359
43	2247	1.2	34.3	30000	**A603_34.3 S5 ME5SA4**	**A603_34.3 S5 MX5SB4**	354	**A603_34.3 P160 BE160M4**	**A603_34.3 P160 BX160MB4**	355
46	2074	1.3	31.7	30000	**A603_31.7 S5 ME5SA4**	**A603_31.7 S5 MX5SB4**	354	**A603_31.7 P160 BE160M4**	**A603_31.7 P160 BX160MB4**	355
48	2003	3.2	30.6	52600				**A803_30.6 P160 BE160M4**	**A803_30.6 P160 BX160MB4**	362
49	1972	2.3	30.1	49400				**A703_30.1 P160 BE160M4**	**A703_30.1 P160 BX160MB4**	359
49	1961	1.0	29.9	28200	**A553_29.9 S5 ME5SA4**	**A553_29.9 S5 MX5SB4**	350	**A553_29.9 P160 BE160M4**	**A553_29.9 P160 BX160MB4**	351
52	1849	3.6	28.2	51600				**A803_28.2 P160 BE160M4**	**A803_28.2 P160 BX160MB4**	362
53	1825	1.5	27.9	30000	**A603_27.9 S5 ME5SA4**	**A603_27.9 S5 MX5SB4**	354	**A603_27.9 P160 BE160M4**	**A603_27.9 P160 BX160MB4**	355
53	1820	2.3	27.8	48500				**A703_27.8 P160 BE160M4**	**A703_27.8 P160 BX160MB4**	359
57	1685	1.7	25.7	30000	**A603_25.7 S5 ME5SA4**	**A603_25.7 S5 MX5SB4**	354	**A603_25.7 P160 BE160M4**	**A603_25.7 P160 BX160MB4**	355
61	1576	1.0	24.0	7800	**A503_24.0 S5 ME5SA4**	**A503_24.0 S5 MX5SB4**	346	**A503_24.0 P160 BE160M4**	**A503_24.0 P160 BX160MB4**	347
62	1559	1.3	23.8	26000	**A553_23.8 S5 ME5SA4**	**A553_23.8 S5 MX5SB4**	350	**A553_23.8 P160 BE160M4**	**A553_23.8 P160 BX160MB4**	351
63	1541	2.8	23.5	46600				**A703_23.5 P160 BE160M4**	**A703_23.5 P160 BX160MB4**	359
69	1396	2.9	21.3	45500	**A703_21.3 S5 ME5SA4**	**A703_21.3 S5 MX5SB4**	358	**A703_21.3 P160 BE160M4**	**A703_21.3 P160 BX160MB4**	359
70	1416	0.8	20.9		**A502_20.9 S5 ME5SA4**	**A502_20.9 S5 MX5SB4**	346	**A502_20.9 P160 BE160M4**	**A502_20.9 P160 BX160MB4**	347
71	1394	1.4	20.6	30000	**A602_20.6 S5 ME5SA4**	**A602_20.6 S5 MX5SB4**	354	**A602_20.6 P160 BE160M4**	**A602_20.6 P160 BX160MB4**	355
75	1288	2.9	19.7	44500	**A703_19.7 S5 ME5SA4**	**A703_19.7 S5 MX5SB4**	358	**A703_19.7 P160 BE160M4**	**A703_19.7 P160 BX160MB4**	359
76	1302	1.4	19.2	27900	**A552_19.2 S5 ME5SA4**	**A552_19.2 S5 MX5SB4**	350	**A552_19.2 P160 BE160M4**	**A552_19.2 P160 BX160MB4**	351
88	1133	1.8	16.7	30000	**A602_16.7 S5 ME5SA4**	**A602_16.7 S5 MX5SB4**	354	**A602_16.7 P160 BE160M4**	**A602_16.7 P160 BX160MB4**	355
89	1121	1.1	16.6	12000	**A502_16.6 S5 ME5SA4**	**A502_16.6 S5 MX5SB4**	346	**A502_16.6 P160 BE160M4**	**A502_16.6 P160 BX160MB4**	347
94	1061	1.7	15.7	26600	**A552_15.7 S5 ME5SA4**	**A552_15.7 S5 MX5SB4**	350	**A552_15.7 P160 BE160M4**	**A552_15.7 P160 BX160MB4**	351
112	887	1.2	13.1	11500	**A502_13.1 S5 ME5SA4**	**A502_13.1 S5 MX5SB4**	346	**A502_13.1 P160 BE160M4**	**A502_13.1 P160 BX160MB4**	347
112	885	2.0	13.1	25400	**A552_13.1 S5 ME5SA4**	**A552_13.1 S5 MX5SB4**	350	**A552_13.1 P160 BE160M4**	**A552_13.1 P160 BX160MB4**	351
116	860	2.3	12.7	30000	**A602_12.7 S5 ME5SA4**	**A602_12.7 S5 MX5SB4**	354	**A602_12.7 P160 BE160M4**	**A602_12.7 P160 BX160MB4**	355
124	773	2.1	23.8	23600	**A553_23.8 S5 ME5SA2**		350	**A553_23.8 P160 BE160MA2**		351
142	701	2.6	10.4	24000	**A552_10.4 S5 ME5SA4**	**A552_10.4 S5 MX5SB4**	350	**A552_10.4 P160 BE160M4**	**A552_10.4 P160 BX160MB4**	351
143	698	2.9	10.3	30000	**A602_10.3 S5 ME5SA4**	**A602_10.3 S5 MX5SB4**	354	**A602_10.3 P160 BE160M4**	**A602_10.3 P160 BX160MB4**	355
151	659	1.5	9.7	10800	**A502_9.7 S5 ME5SA4**	**A502_9.7 S5 MX5SB4**	346	**A502_9.7 P160 BE160M4**	**A502_9.7 P160 BX160MB4**	347
174	573	3.1	8.5	22800	**A552_8.5 S5 ME5SA4**	**A552_8.5 S5 MX5SB4**	350	**A552_8.5 P160 BE160M4**	**A552_8.5 P160 BX160MB4**	351

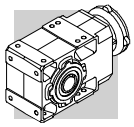

11 kW

n_2 min-1	M_2 Nm	S	i	R_{n2} N	IE2	IE3		IEC IE2	IEC IE3	
190	524	1.8	7.7	10300	**A502_7.7 S5 ME5SA4**	**A502_7.7 S5 MX5SB4,**	346	**A502_7.7 P160 BE160M4**	**A502_7.7 P160 BX160MB4**	347
224	440	2.0	13.1	9920	**A502_13.1 S5 ME5SA2**		346	**A502_13.1 P160 BE160MA2**		347
380	260	2.8	7.7	8650	**A502_7.7 S5 ME5SA2**		346	**A502_7.7 P160 BE160MA2**		347

15 kW

n_2 min-1	M_2 Nm	S	i	R_{n2} N	IE2	IE3		IEC IE2	IEC IE3	
8.2	15697	0.9	180.0	75000	**A904_180.0 S5 ME5LA4**	**A904_180.0 S5 MX5LA4**	364	**A904_180.0 P160 BE160L4**	**A904_180.0 P160 BX160L4**	365
8.8	14490	1.0	166.1	75000	**A904_166.1 S5 ME5LA4**	**A904_166.1 S5 MX5LA4**	364	**A904_166.1 P160 BE160L4**	**A904_166.1 P160 BX160L4**	365
9.7	13467	1.0	151.0	75000	**A903_151.0 S5 ME5LA4**	**A903_151.0 S5 MX5LA4**	364	**A903_151.0 P160 BE160L4**	**A903_151.0 P160 BX160L4**	365
10.5	12431	1.0	139.4	75000	**A903_139.4 S5 ME5LA4**	**A903_139.4 S5 MX5LA4**	364	**A903_139.4 P160 BE160L4**	**A903_139.4 P160 BX160L4**	365
11.6	11294	1.2	126.6	75000	**A903_126.6 S5 ME5LA4**	**A903_126.6 S5 MX5LA4**	364	**A903_126.6 P160 BE160L4**	**A903_126.6 P160 BX160L4**	365
12.6	10426	1.3	116.9	75000	**A903_116.9 S5 ME5LA4**	**A903_116.9 S5 MX5LA4**	364	**A903_116.9 P160 BE160L4**	**A903_116.9 P160 BX160L4**	365
13.8	9526	1.5	106.8	75000	**A903_106.8 S5 ME5LA4**	**A903_106.8 S5 MX5LA4**	364	**A903_106.8 P160 BE160L4**	**A903_106.8 P160 BX160L4**	365
14.9	8793	1.6	98.6	75000	**A903_98.6 S5 ME5LA4**	**A903_98.6 S5 MX5LA4**	364	**A903_98.6 P160 BE160L4**	**A903_98.6 P160 BX160L4**	365
15.3	8564	0.9	96.0	60600	**A803_96.0 S5 ME5LA4**	**A803_96.0 S5 MX5LA4**	361	**A803_96.0 P160 BE160L4**	**A803_96.0 P160 BX160L4**	362
16.5	7953	1.0	89.2	60400	**A803_89.2 S5 ME5LA4**	**A803_89.2 S5 MX5LA4**	361	**A803_89.2 P160 BE160L4**	**A803_89.2 P160 BX160L4**	362
16.9	7765	1.8	87.1	75000	**A903_87.1 S5 ME5LA4**	**A903_87.1 S5 MX5LA4**	364	**A903_87.1 P160 BE160L4**	**A903_87.1 P160 BX160L4**	365
17.9	7341	1.1	82.3	59800	**A803_82.3 S5 ME5LA4**	**A803_82.3 S5 MX5LA4**	361	**A803_82.3 P160 BE160L4**	**A803_82.3 P160 BX160L4**	362
18.3	7168	2.0	80.4	75000	**A903_80.4 S5 ME5LA4**	**A903_80.4 S5 MX5LA4**	364	**A903_80.4 P160 BE160L4**	**A903_80.4 P160 BX160L4**	365
19.7	6642	2.1	74.5	75000	**A903_74.5 S5 ME5LA4**	**A903_74.5 S5 MX5LA4**	364	**A903_74.5 P160 BE160L4**	**A903_74.5 P160 BX160L4**	365
20.3	6454	1.2	72.4	59100	**A803_72.4 S5 ME5LA4**	**A803_72.4 S5 MX5LA4**	361	**A803_72.4 P160 BE160L4**	**A803_72.4 P160 BX160L4**	362
21.4	6131	2.3	68.8	75000	**A903_68.8 S5 ME5LA4**	**A903_68.8 S5 MX5LA4**	364	**A903_68.8 P160 BE160L4**	**A903_68.8 P160 BX160L4**	365
22.0	5957	1.3	66.8	58300	**A803_66.8 S5 ME5LA4**	**A803_66.8 S5 MX5LA4**	361	**A803_66.8 P160 BE160L4**	**A803_66.8 P160 BX160L4**	362
24.6	5331	1.5	59.8	57500	**A803_59.8 S5 ME5LA4**	**A803_59.8 S5 MX5LA4**	361	**A803_59.8 P160 BE160L4**	**A803_59.8 P160 BX160L4**	362
24.7	5317	2.6	59.6	75000	**A903_59.6 S5 ME5LA4**	**A903_59.6 S5 MX5LA4**	364	**A903_59.6 P160 BE160L4**	**A903_59.6 P160 BX160L4**	365
25.5	5143	1.0	57.7	50000	**A703_57.7 S5 ME5LA4**	**A703_57.7 S5 MX5LA4**	358	**A703_57.7 P160 BE160L4**	**A703_57.7 P160 BX160L4**	359
26.6	4921	1.6	55.2	56700	**A803_55.2 S5 ME5LA4**	**A803_55.2 S5 MX5LA4**	361	**A803_55.2 P160 BE160L4**	**A803_55.2 P160 BX160L4**	362
26.7	4908	2.9	55.0	75000	**A903_55.0 S5 ME5LA4**	**A903_55.0 S5 MX5LA4**	364	**A903_55.0 P160 BE160L4**	**A903_55.0 P160 BX160L4**	365
27.6	4747	1.1	53.2	50000	**A703_53.2 S5 ME5LA4**	**A703_53.2 S5 MX5LA4**	358	**A703_53.2 P160 BE160L4**	**A703_53.2 P160 BX160L4**	359
30	4370	1.1	49.0	50000	**A703_49.0 S5 ME5LA4**	**A703_49.0 S5 MX5LA4**	358	**A703_49.0 P160 BE160L4**	**A703_49.0 P160 BX160L4**	359
30	4307	3.3	48.3	74900				**A903_48.3 P160 BE160L4**	**A903_48.3 P160 BX160L4**	365
31	4297	1.9	48.2	55500	**A803_48.2 S5 ME5LA4**	**A803_48.2 S5 MX5LA4**	361	**A803_48.2 P160 BE160L4**	**A803_48.2 P160 BX160L4**	362
33	4034	1.2	45.2	50000	**A703_45.2 S5 ME5LA4**	**A703_45.2 S5 MX5LA4**	358	**A703_45.2 P160 BE160L4**	**A703_45.2 P160 BX160L4**	359
33	3976	3.5	44.6	73500				**A903_44.6 P160 BE160L4**	**A903_44.6 P160 BX160L4**	365
33	3966	1.9	44.5	54700	**A803_44.5 S5 ME5LA4**	**A803_44.5 S5 MX5LA4**	361	**A803_44.5 P160 BE160L4**	**A803_44.5 P160 BX160L4**	362
38	3433	2.2	38.5	53200				**A803_38.5 P160 BE160L4**	**A803_38.5 P160 BX160L4**	362
38	3423	1.4	38.4	49900	**A703_38.4 S5 ME5LA4**	**A703_38.4 S5 MX5LA4**	358	**A703_38.4 P160 BE160L4**	**A703_38.4 P160 BX160L4**	359
41	3169	2.2	35.5	52300				**A803_35.5 P160 BE160L4**	**A803_35.5 P160 BX160L4**	362
41	3160	1.4	35.4	49100	**A703_35.4 S5 ME5LA4**	**A703_35.4 S5 MX5LA4**	358	**A703_35.4 P160 BE160L4**	**A703_35.4 P160 BX160L4**	359
43	3059	0.9	34.3	30000	**A603_34.3 S5 ME5LA4**	**A603_34.3 S5 MX5LA4**	354	**A603_34.3 P160 BE160L4**	**A603_34.3 P160 BX160L4**	355
46	2824	1.0	31.7	30000	**A603_31.7 S5 ME5LA4**	**A603_31.7 S5 MX5LA4**	354	**A603_31.7 P160 BE160L4**	**A603_31.7 P160 BX160L4**	355
48	2727	2.4	30.6	50800				**A803_30.6 P160 BE160L4**	**A803_30.6 P160 BX160L4**	362
49	2684	1.7	30.1	47600				**A703_30.1 P160 BE160L4**	**A703_30.1 P160 BX160L4**	359
52	2517	2.6	28.2	49900				**A803_28.2 P160 BE160L4**	**A803_28.2 P160 BX160L4**	362
53	2484	1.1	27.9	30000	**A603_27.9 S5 ME5LA4**	**A603_27.9 S5 MX5LA4**	354	**A603_27.9 P160 BE160L4**	**A603_27.9 P160 BX160L4**	355
53	2478	1.7	27.8	46700				**A703_27.8 P160 BE160L4**	**A703_27.8 P160 BX160L4**	359
57	2293	1.2	25.7	30000	**A603_25.7 S5 ME5LA4**	**A603_25.7 S5 MX5LA4**	354	**A603_25.7 P160 BE160L4**	**A603_25.7 P160 BX160L4**	355
62	2122	0.9	23.8	22600	**A553_23.8 S5 ME5LA4**	**A553_23.8 S5 MX5LA4**	350	**A553_23.8 P160 BE160L4**	**A553_23.8 P160 BX160L4**	351
63	2098	2.1	23.5	45100				**A703_23.5 P160 BE160L4**	**A703_23.5 P160 BX160L4**	359
69	1900	2.1	21.3	44100	**A703_21.3 S5 ME5LA4**	**A703_21.3 S5 MX5LA4**	358	**A703_21.3 P160 BE160L4**	**A703_21.3 P160 BX160L4**	359
70	1868	3.5	20.9	46600	**A803_20.9 S5 ME5LA4**	**A803_20.9 S5 MX5LA4**	361	**A803_20.9 P160 BE160L4**	**A803_20.9 P160 BX160L4**	362
71	1897	1.1	20.6	30000	**A602_20.6 S5 ME5LA4**	**A602_20.6 S5 MX5LA4**	354	**A602_20.6 P160 BE160L4**	**A602_20.6 P160 BX160L4**	355
75	1754	2.1	19.7	43300	**A703_19.7 S5 ME5LA4**	**A703_19.7 S5 MX5LA4**	358	**A703_19.7 P160 BE160L4**	**A703_19.7 P160 BX160L4**	359
76	1725	3.5	19.3	45700	**A803_19.3 S5 ME5LA4**	**A803_19.3 S5 MX5LA4**	361	**A803_19.3 P160 BE160L4**	**A803_19.3 P160 BX160L4**	362
76	1772	1.0	19.2	26800	**A552_19.2 S5 ME5LA4**	**A552_19.2 S5 MX5LA4**	350	**A552_19.2 P160 BE160L4**	**A552_19.2 P160 BX160L4**	351
88	1542	1.3	16.7	30000	**A602_16.7 S5 ME5LA4**	**A602_16.7 S5 MX5LA4**	354	**A602_16.7 P160 BE160L4**	**A602_16.7 P160 BX160L4**	355
88	1488	2.7	16.7	41600	**A703_16.7 S5 ME5LA4**	**A703_16.7 S5 MX5LA4**	358	**A703_16.7 P160 BE160L4**	**A703_16.7 P160 BX160L4**	359

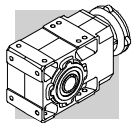

15 kW

n_2	M_2	S	i	R_{n2}	IE2	IE3		IEC IE2	IEC IE3	
min-1	Nm			N						
94	1444	1.2	15.7	25700	**A552_15.7 S5 ME5LA4**	**A552_15.7 S5 MX5LA4**	350	**A552_15.7 P160 BE160L4**	**A552_15.7 P160 BX160L4**	351
95	1374	2.7	15.4	40800	**A703_15.4 S5 ME5LA4**	**A703_15.4 S5 MX5LA4**	358	**A703_15.4 P160 BE160L4**	**A703_15.4 P160 BX160L4**	359
112	1207	0.9	13.1	10500	**A502_13.1 S5 ME5LA4**	**A502_13.1 S5 MX5LA4**	346	**A502_13.1 P160 BE160L4**	**A502_13.1 P160 BX160L4**	347
112	1167	3.3	13.1	39200				**A703_13.1 P160 BE160L4**	**A703_13.1 P160 BX160L4**	359
112	1205	1.5	13.1	24700	**A552_13.1 S5 ME5LA4**	**A552_13.1 S5 MX5LA4**	350	**A552_13.1 P160 BE160L4**	**A552_13.1 P160 BX160L4**	351
116	1170	1.7	12.7	30000	**A602_12.7 S5 ME5LA4**	**A602_12.7 S5 MX5LA4**	354	**A602_12.7 P160 BE160L4**	**A602_12.7 P160 BX160L4**	355
122	1077	3.3	12.1	38400				**A703_12.1 P160 BE160L4**	**A703_12.1 P160 BX160L4**	359
142	954	1.9	10.4	23400	**A552_10.4 S5 ME5LA4**	**A552_10.4 S5 MX5LA4**	350	**A552_10.4 P160 BE160L4**	**A552_10.4 P160 BX160L4**	351
143	950	2.1	10.3	30000	**A602_10.3 S5 ME5LA4**	**A602_10.3 S5 MX5LA4**	354	**A602_10.3 P160 BE160L4**	**A602_10.3 P160 BX160L4**	355
151	897	1.1	9.7	10100	**A502_9.7 S5 ME5LA4**	**A502_9.7 S5 MX5LA4**	346	**A502_9.7 P160 BE160L4**	**A502_9.7 P160 BX160L4**	347
174	779	2.3	8.5	22200	**A552_8.5 S5 ME5LA4**	**A552_8.5 S5 MX5LA4**	350	**A552_8.5 P160 BE160L4**	**A552_8.5 P160 BX160L4**	351
187	724	2.8	7.9	28300	**A602_7.9 S5 ME5LA4**	**A602_7.9 S5 MX5LA4**	354	**A602_7.9 P160 BE160L4**	**A602_7.9 P160 BX160L4**	355
190	713	1.3	7.7	9750	**A502_7.7 S5 ME5LA4**	**A502_7.7 S5 MX5LA4**	346	**A502_7.7 P160 BE160L4**	**A502_7.7 P160 BX160L4**	347
229	591	2.9	6.4	20700	**A552_6.4 S5 ME5LA4**	**A552_6.4 S5 MX5LA4**	350	**A552_6.4 P160 BE160L4**	**A552_6.4 P160 BX160L4**	351
297	456	3.5	4.9	19400	**A552_4.9 S5 ME5LA4**	**A552_4.9 S5 MX5LA4**	350	**A552_4.9 P160 BE160L4**	**A552_4.9 P160 BX160L4**	351
302	446	1.8	9.7	8830	**A502_9.7 S5 ME5SB2**		346	**A502_9.7 P160 BE160MB2**		347
380	354	2.1	7.7	8350	**A502_7.7 S5 ME5SB2**		346	**A502_7.7 P160 BE160MB2**		347

18.5 kW

n_2	M_2	S	i	R_{n2}	IE2	IE3		IEC IE2	IEC IE3	
min-1	Nm			N						
11.6	13830	1.0	126.6	75000				**A903_126.6 P180 BE180M4**	**A903_126.6 P180 BX180M4**	365
12.6	12766	1.1	116.9	75000				**A903_116.9 P180 BE180M4**	**A903_116.9 P180 BX180M4**	365
13.8	11665	1.2	106.8	75000				**A903_106.8 P180 BE180M4**	**A903_106.8 P180 BX180M4**	365
14.9	10767	1.3	98.6	75000				**A903_98.6 P180 BE180M4**	**A903_98.6 P180 BX180M4**	365
16.9	9508	1.5	87.1	75000				**A903_87.1 P180 BE180M4**	**A903_87.1 P180 BX180M4**	365
18.3	8777	1.6	80.4	75000				**A903_80.4 P180 BE180M4**	**A903_80.4 P180 BX180M4**	365
19.7	8133	1.7	74.5	75000				**A903_74.5 P180 BE180M4**	**A903_74.5 P180 BX180M4**	365
20.3	7903	1.0	72.4	55600				**A803_72.4 P180 BE180M4**	**A803_72.4 P180 BX180M4**	362
21.4	7508	1.9	68.8	75000				**A903_68.8 P180 BE180M4**	**A903_68.8 P180 BX180M4**	365
22.0	7295	1.1	66.8	55100				**A803_66.8 P180 BE180M4**	**A803_66.8 P180 BX180M4**	362
24.6	6528	1.2	59.8	54700				**A803_59.8 P180 BE180M4**	**A803_59.8 P180 BX180M4**	362
24.7	6510	2.2	59.6	75000				**A903_59.6 P180 BE180M4**	**A903_59.6 P180 BX180M4**	365
26.6	6026	1.3	55.2	54100				**A803_55.2 P180 BE180M4**	**A803_55.2 P180 BX180M4**	362
26.7	6009	2.3	55.0	74900				**A903_55.0 P180 BE180M4**	**A903_55.0 P180 BX180M4**	365
30	5351	0.9	49.0	49600				**A703_49.0 P180 BE180M4**	**A703_49.0 P180 BX180M4**	359
30	5274	2.7	48.3	73100				**A903_48.3 P180 BE180M4**	**A903_48.3 P180 BX180M4**	365
31	5262	1.5	48.2	53200				**A803_48.2 P180 BE180M4**	**A803_48.2 P180 BX180M4**	362
33	4939	1.0	45.2	49000				**A703_45.2 P180 BE180M4**	**A703_45.2 P180 BX180M4**	359
33	4869	2.9	44.6	71800				**A903_44.6 P180 BE180M4**	**A903_44.6 P180 BX180M4**	365
33	4857	1.5	44.5	52500				**A803_44.5 P180 BE180M4**	**A803_44.5 P180 BX180M4**	362
38	4238	3.3	38.8	69700				**A903_38.8 P180 BE180M4**	**A903_38.8 P180 BX180M4**	365
38	4204	1.8	38.5	51400				**A803_38.5 P180 BE180M4**	**A803_38.5 P180 BX180M4**	362
38	4191	1.2	38.4	48000				**A703_38.4 P180 BE180M4**	**A703_38.4 P180 BX180M4**	359
41	3912	3.5	35.8	68500				**A903_35.8 P180 BE180M4**	**A903_35.8 P180 BX180M4**	365
41	3881	1.8	35.5	50600				**A803_35.5 P180 BE180M4**	**A803_35.5 P180 BX180M4**	362
41	3869	1.2	35.4	47300				**A703_35.4 P180 BE180M4**	**A703_35.4 P180 BX180M4**	359
48	3339	1.9	30.6	49300				**A803_30.6 P180 BE180M4**	**A803_30.6 P180 BX180M4**	362
49	3287	1.4	30.1	46100				**A703_30.1 P180 BE180M4**	**A703_30.1 P180 BX180M4**	359
52	3082	2.1	28.2	48500				**A803_28.2 P180 BE180M4**	**A803_28.2 P180 BX180M4**	362
53	3042	0.9	27.9	30000				**A603_27.9 P180 BE180M4**	**A603_27.9 P180 BX180M4**	355
53	3034	1.4	27.8	45300				**A703_27.8 P180 BE180M4**	**A703_27.8 P180 BX180M4**	359
57	2808	1.0	25.7	30000				**A603_25.7 P180 BE180M4**	**A603_25.7 P180 BX180M4**	355
60	2675	2.5	24.5	47200				**A803_24.5 P180 BE180M4**	**A803_24.5 P180 BX180M4**	362
63	2568	1.7	23.5	43900				**A703_23.5 P180 BE180M4**	**A703_23.5 P180 BX180M4**	359

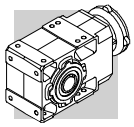

18.5 kW

n_2 min-1	M_2 Nm	S	i	R_{n2} N	IE2	IE3		IEC IE2	IEC IE3	
65	2470	2.5	22.6	46300				**A803_22.6 P180 BE180M4**	**A803_22.6 P180 BX180M4**	362
69	2326	1.7	21.3	43000				**A703_21.3 P180 BE180M4**	**A703_21.3 P180 BX180M4**	359
70	2288	2.9	20.9	45600				**A803_20.9 P180 BE180M4**	**A803_20.9 P180 BX180M4**	362
71	2323	0.9	20.6	30000				**A602_20.6 P180 BE180M4**	**A602_20.6 P180 BX180M4**	355
75	2147	1.7	19.7	42300				**A703_19.7 P180 BE180M4**	**A703_19.7 P180 BX180M4**	359
76	2112	2.9	19.3	44800				**A803_19.3 P180 BE180M4**	**A803_19.3 P180 BX180M4**	362
88	1888	1.1	16.7	30000				**A602_16.7 P180 BE180M4**	**A602_16.7 P180 BX180M4**	355
88	1822	2.2	16.7	40800				**A703_16.7 P180 BE180M4**	**A703_16.7 P180 BX180M4**	359
94	1769	1.0	15.7	25000				**A552_15.7 P180 BE180M4**	**A552_15.7 P180 BX180M4**	351
95	1682	2.2	15.4	40100				**A703_15.4 P180 BE180M4**	**A703_15.4 P180 BX180M4**	359
112	1429	2.7	13.1	38600				**A703_13.1 P180 BE180M4**	**A703_13.1 P180 BX180M4**	359
112	1475	1.2	13.1	24100				**A552_13.1 P180 BE180M4**	**A552_13.1 P180 BX180M4**	351
116	1433	1.4	12.7	30000				**A602_12.7 P180 BE180M4**	**A602_12.7 P180 BX180M4**	355
122	1319	2.7	12.1	37800				**A703_12.1 P180 BE180M4**	**A703_12.1 P180 BX180M4**	359
124	1299	1.2	23.8	21600	**A553_23.8 S5 ME5LA2**		350	**A553_23.8 P160 BE160L2**		351
142	1168	1.5	10.4	22900				**A552_10.4 P180 BE180M4**	**A552_10.4 P180 BX180M4**	351
143	1164	1.7	10.3	29900				**A602_10.3 P180 BE180M4**	**A602_10.3 P180 BX180M4**	355
144	1117	2.9	10.2	36300				**A703_10.2 P180 BE180M4**	**A703_10.2 P180 BX180M4**	359
151	1098	0.9	9.7	9530				**A502_9.7 P180 BE180M4**	**A502_9.7 P180 BX180M4**	347
156	1031	2.9	9.4	35600				**A703_9.4 P180 BE180M4**	**A703_9.4 P180 BX180M4**	359
174	954	1.9	8.5	21900				**A552_8.5 P180 BE180M4**	**A552_8.5 P180 BX180M4**	351
187	887	2.3	7.9	27900				**A602_7.9 P180 BE180M4**	**A602_7.9 P180 BX180M4**	355
190	873	1.1	7.7	9260				**A502_7.7 P180 BE180M4**	**A502_7.7 P180 BX180M4**	347
229	723	2.4	6.4	20400				**A552_6.4 P180 BE180M4**	**A552_6.4 P180 BX180M4**	351
297	558	2.9	4.9	19100				**A552_4.9 P180 BE180M4**	**A552_4.9 P180 BX180M4**	351
381	436	1.7	7.7	8100	**A502_7.7 S5 ME5LA2**		346	**A502_7.7 P160 BE160L2**		347

22 kW

n_2 min-1	M_2 Nm	S	i	R_{n2} N	IE2	IE3		IEC IE2	IEC IE3	
12.6	15213	0.9	116.9	75000				**A903_116.9 P180 BE180L4**	**A903_116.9 P180 BX180L4**	365
13.8	13900	1.0	106.8	75000				**A903_106.8 P180 BE180L4**	**A903_106.8 P180 BX180L4**	365
14.9	12831	1.1	98.6	75000				**A903_98.6 P180 BE180L4**	**A903_98.6 P180 BX180L4**	365
16.9	11330	1.2	87.1	75000				**A903_87.1 P180 BE180L4**	**A903_87.1 P180 BX180L4**	365
18.3	10459	1.3	80.4	75000				**A903_80.4 P180 BE180L4**	**A903_80.4 P180 BX180L4**	365
19.7	9692	1.4	74.5	75000				**A903_74.5 P180 BE180L4**	**A903_74.5 P180 BX180L4**	365
21.4	8947	1.6	68.8	75000				**A903_68.8 P180 BE180L4**	**A903_68.8 P180 BX180L4**	365
22.0	8693	0.9	66.8	51900				**A803_66.8 P180 BE180L4**	**A803_66.8 P180 BX180L4**	362
24.6	7779	1.0	59.8	51800				**A803_59.8 P180 BE180L4**	**A803_59.8 P180 BX180L4**	362
24.7	7758	1.8	59.6	73800				**A903_59.6 P180 BE180L4**	**A903_59.6 P180 BX180L4**	365
26.6	7181	1.1	55.2	51400				**A803_55.2 P180 BE180L4**	**A803_55.2 P180 BX180L4**	362
26.7	7161	2.0	55.0	72700				**A903_55.0 P180 BE180L4**	**A903_55.0 P180 BX180L4**	365
30	6285	2.2	48.3	71100				**A903_48.3 P180 BE180L4**	**A903_48.3 P180 BX180L4**	365
31	6270	1.3	48.2	50900				**A803_48.2 P180 BE180L4**	**A803_48.2 P180 BX180L4**	362
33	5802	2.4	44.6	70000				**A903_44.6 P180 BE180L4**	**A903_44.6 P180 BX180L4**	365
33	5788	1.3	44.5	50300				**A803_44.5 P180 BE180L4**	**A803_44.5 P180 BX180L4**	362
38	5050	2.8	38.8	68100				**A903_38.8 P180 BE180L4**	**A903_38.8 P180 BX180L4**	365
38	5010	1.5	38.5	49500				**A803_38.5 P180 BE180L4**	**A803_38.5 P180 BX180L4**	362
38	4995	1.0	38.4	46000				**A703_38.4 P180 BE180L4**	**A703_38.4 P180 BX180L4**	359
41	4662	2.9	35.8	67000				**A903_35.8 P180 BE180L4**	**A903_35.8 P180 BX180L4**	365
41	4625	1.5	35.5	48900				**A803_35.5 P180 BE180L4**	**A803_35.5 P180 BX180L4**	362
41	4611	1.0	35.4	45500				**A703_35.4 P180 BE180L4**	**A703_35.4 P180 BX180L4**	359

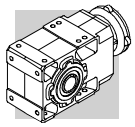

22 kW

n_2 min-1	M_2 Nm	S	i	R_{n2} N	IE2	IE3		IEC IE2	IEC IE3	
47	4099	3.4	31.5	65200				**A903_31.5 P180 BE180L4**	**A903_31.5 P180 BX180L4**	365
48	3979	1.6	30.6	47800				**A803_30.6 P180 BE180L4**	**A803_30.6 P180 BX180L4**	362
49	3917	1.2	30.1	44500				**A703_30.1 P180 BE180L4**	**A703_30.1 P180 BX180L4**	359
51	3784	3.4	29.1	64000				**A903_29.1 P180 BE180L4**	**A903_29.1 P180 BX180L4**	365
52	3673	1.8	28.2	47100				**A803_28.2 P180 BE180L4**	**A803_28.2 P180 BX180L4**	362
53	3616	1.2	27.8	43900				**A703_27.8 P180 BE180L4**	**A703_27.8 P180 BX180L4**	359
60	3188	2.1	24.5	45900				**A803_24.5 P180 BE180L4**	**A803_24.5 P180 BX180L4**	362
63	3061	1.4	23.5	42700				**A703_23.5 P180 BE180L4**	**A703_23.5 P180 BX180L4**	359
65	2943	2.1	22.6	45200				**A803_22.6 P180 BE180L4**	**A803_22.6 P180 BX180L4**	362
69	2772	1.4	21.3	41900				**A703_21.3 P180 BE180L4**	**A703_21.3 P180 BX180L4**	359
70	2726	2.4	20.9	44600				**A803_20.9 P180 BE180L4**	**A803_20.9 P180 BX180L4**	362
75	2559	1.4	19.7	41200				**A703_19.7 P180 BE180L4**	**A703_19.7 P180 BX180L4**	359
76	2516	2.4	19.3	43800				**A803_19.3 P180 BE180L4**	**A803_19.3 P180 BX180L4**	362
88	2178	3.0	16.7	42500				**A803_16.7 P180 BE180L4**	**A803_16.7 P180 BX180L4**	362
88	2250	0.9	16.7	30000				**A602_16.7 P180 BE180L4**	**A602_16.7 P180 BX180L4**	355
88	2172	1.8	16.7	39900				**A703_16.7 P180 BE180L4**	**A703_16.7 P180 BX180L4**	359
95	2011	3.0	15.5	41700				**A803_15.5 P180 BE180L4**	**A803_15.5 P180 BX180L4**	362
95	2005	1.8	15.4	39200				**A703_15.4 P180 BE180L4**	**A703_15.4 P180 BX180L4**	359
112	1703	2.3	13.1	37900				**A703_13.1 P180 BE180L4**	**A703_13.1 P180 BX180L4**	359
112	1758	1.0	13.1	23500				**A552_13.1 P180 BE180L4**	**A552_13.1 P180 BX180L4**	351
116	1708	1.2	12.7	30000				**A602_12.7 P180 BE180L4**	**A602_12.7 P180 BX180L4**	355
122	1572	2.3	12.1	37200				**A703_12.1 P180 BE180L4**	**A703_12.1 P180 BX180L4**	359
142	1392	1.3	10.4	22400				**A552_10.4 P180 BE180L4**	**A552_10.4 P180 BX180L4**	351
143	1387	1.4	10.3	29300				**A602_10.3 P180 BE180L4**	**A602_10.3 P180 BX180L4**	355
144	1331	2.4	10.2	35800				**A703_10.2 P180 BE180L4**	**A703_10.2 P180 BX180L4**	359
156	1228	2.4	9.4	35100				**A703_9.4 P180 BE180L4**	**A703_9.4 P180 BX180L4**	359
174	1137	1.6	8.5	21400				**A552_8.5 P180 BE180L4**	**A552_8.5 P180 BX180L4**	351
187	1057	1.9	7.9	27500				**A602_7.9 P180 BE180L4**	**A602_7.9 P180 BX180L4**	355
190	1040	0.9	7.7	8760				**A502_7.7 P180 BE180L4**	**A502_7.7 P180 BX180L4**	347
229	862	2.0	6.4	20100				**A552_6.4 P180 BE180L4**	**A552_6.4 P180 BX180L4**	351
297	665	2.4	4.9	18900				**A552_4.9 P180 BE180L4**	**A552_4.9 P180 BX180L4**	351

30 kW

n_2 min-1	M_2 Nm	S	i	R_{n2} N			IEC IE3	
16.8	15556	0.9	87.1	70100			**A903_87.1 P200 BX200LAK4**	365
18.2	14360	1.0	80.4	70000			**A903_80.4 P200 BX200LAK4**	365
19.6	13307	1.1	74.5	69700			**A903_74.5 P200 BX200LAK4**	365
21.2	12283	1.1	68.8	69200			**A903_68.8 P200 BX200LAK4**	365
24.5	10651	1.3	59.6	68500			**A903_59.6 P200 BX200LAK4**	365
26.5	9832	1.4	55.0	67800			**A903_55.0 P200 BX200LAK4**	365
30.0	8630	1.6	48.3	66900			**A903_48.3 P200 BX200LAK4**	365
30	8609	0.9	48.2	45700			**A803_48.2 P200 BX200LAK4**	362
33	7966	1.8	44.6	66000			**A903_44.6 P200 BX200LAK4**	365
33	7946	0.9	44.5	45500			**A803_44.5 P200 BX200LAK4**	362
38	6934	2.0	38.8	64700			**A903_38.8 P200 BX200LAK4**	365
38	6879	1.1	38.5	45300			**A803_38.5 P200 BX200LAK4**	362
41	6400	2.1	35.8	63800			**A903_35.8 P200 BX200LAK4**	365
41	6349	1.1	35.5	45000			**A803_35.5 P200 BX200LAK4**	362
46	5628	2.5	31.5	62400			**A903_31.5 P200 BX200LAK4**	365
48	5463	1.2	30.6	44500			**A803_30.6 P200 BX200LAK4**	362
50	5195	2.5	29.1	61400			**A903_29.1 P200 BX200LAK4**	365
52	5043	1.3	28.2	44000			**A803_28.2 P200 BX200LAK4**	362
60	4377	1.5	24.5	43300			**A803_24.5 P200 BX200LAK4**	362
61	4307	3.1	24.1	59200			**A903_24.1 P200 BX200LAK4**	365

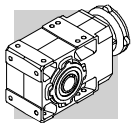

30 kW

n_2 min-1	M_2 Nm	S	i	R_{n2} N			IEC IE3	
62	4202	1.0	23.5	40100			**A703_23.5 P200 BX200LAK4**	359
65	4041	1.5	22.6	42700			**A803_22.6 P200 BX200LAK4**	362
66	3976	3.1	22.3	58200			**A903_22.3 P200 BX200LAK4**	365
70	3752	3.3	21.0	57500			**A903_21.0 P200 BX200LAK4**	365
70	3743	1.7	20.9	42300			**A803_20.9 P200 BX200LAK4**	362
75	3463	3.3	19.4	56500			**A903_19.4 P200 BX200LAK4**	365
75	3455	1.8	19.3	41700			**A803_19.3 P200 BX200LAK4**	362
87	2991	2.2	16.7	40700			**A803_16.7 P200 BX200LAK4**	362
87	2982	1.3	16.7	38100			**A703_16.7 P200 BX200LAK4**	359
94	2761	2.2	15.5	40000			**A803_15.5 P200 BX200LAK4**	362
95	2752	1.3	15.4	37500			**A703_15.4 P200 BX200LAK4**	359
110	2375	2.8	13.3	38900			**A803_13.3 P200 BX200LAK4**	362
112	2338	1.6	13.1	36400			**A703_13.1 P200 BX200LAK4**	359
119	2192	2.8	12.3	38200			**A803_12.3 P200 BX200LAK4**	362
121	2158	1.6	12.1	35800			**A703_12.1 P200 BX200LAK4**	359
125	2094	1.7	23.5	35600			**A703_23.5 P200 IEC200LA2**	359
137	1903	3.4	10.7	37100			**A803_10.7 P200 BX200LAK4**	362
143	1827	1.8	10.2	34600			**A703_10.2 P200 BX200LAK4**	359
148	1757	3.4	9.8	36500			**A803_9.8 P200 BX200LAK4**	362
155	1687	1.8	9.4	34000			**A703_9.4 P200 BX200LAK4**	359
176	1486	2.3	16.7	33100			**A703_16.7 P200 IEC200LA2**	359
190	1371	2.3	15.4	32500			**A703_15.4 P200 IEC200LA2**	359
224	1165	2.7	13.1	31300			**A703_13.1 P200 IEC200LA2**	359
243	1075	2.7	12.1	30600			**A703_12.1 P200 IEC200LA2**	359
287	910	3.2	10.2	29400			**A703_10.2 P200 IEC200LA2**	359
310	840	3.2	9.4	28800			**A703_9.4 P200 IEC200LA2**	359

37 kW

n_2 min-1	M_2 Nm	S	i	R_{n2} N			IEC IE3	
21.5	14945	0.9	68.8	63900			**A903_68.8 P225 BX225SAK4**	365
24.8	12959	1.1	59.6	63900			**A903_59.6 P225 BX225SAK4**	365
26.9	11962	1.2	55.0	63600			**A903_55.0 P225 BX225SAK4**	365
31	10499	1.3	48.3	63100			**A903_48.3 P225 BX225SAK4**	365
33	9692	1.4	44.6	62500			**A903_44.6 P225 BX225SAK4**	365
38	8436	1.7	38.8	61700			**A903_38.8 P225 BX225SAK4**	365
38	8369	0.9	38.5	41700			**A803_38.5 P225 BX225SAK4**	362
41	7787	1.8	35.8	61000			**A903_35.8 P225 BX225SAK4**	365
42	7725	0.9	35.5	41600			**A803_35.5 P225 BX225SAK4**	362
47	6847	2.0	31.5	59900			**A903_31.5 P225 BX225SAK4**	365
48	6647	1.0	30.6	41600			**A803_30.6 P225 BX225SAK4**	362
51	6321	2.1	29.1	59100			**A903_29.1 P225 BX225SAK4**	365
52	6135	1.1	28.2	41300			**A803_28.2 P225 BX225SAK4**	362
60	5326	1.3	24.5	40900			**A803_24.5 P225 BX225SAK4**	362
61	5241	2.5	24.1	57300			**A903_24.1 P225 BX225SAK4**	365
65	4916	1.3	22.6	40500			**A803_22.6 P225 BX225SAK4**	362
67	4837	2.5	22.3	56400			**A903_22.3 P225 BX225SAK4**	365
70	4565	2.7	21.0	55900			**A903_21.0 P225 BX225SAK4**	365
71	4554	1.4	20.9	40300			**A803_20.9 P225 BX225SAK4**	362
76	4214	2.7	19.4	54900			**A903_19.4 P225 BX225SAK4**	365
77	4204	1.4	19.3	39800			**A803_19.3 P225 BX225SAK4**	362
88	3668	3.2	16.9	53400			**A903_16.9 P225 BX225SAK4**	365
88	3639	1.8	16.7	39100			**A803_16.7 P225 BX225SAK4**	362
95	3386	3.2	15.6	52500			**A903_15.6 P225 BX225SAK4**	365
96	3359	1.8	15.5	38500			**A803_15.5 P225 BX225SAK4**	362
111	2890	2.3	13.3	37600			**A803_13.3 P225 BX225SAK4**	362
121	2667	2.3	12.3	37000			**A803_12.3 P225 BX225SAK4**	362
139	2316	2.8	10.7	36100			**A803_10.7 P225 BX225SAK4**	362
151	2137	2.8	9.8	35500			**A803_9.8 P225 BX225SAK4**	362

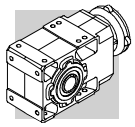

45 kW

n_2 min-1	M_2 Nm	S	i	R_{n2} N			IEC IE3	
26.9	14549	1.0	55.0	58700			**A903_55.0 P225 BX225SBK4**	365
31	12769	1.1	48.3	58900			**A903_48.3 P225 BX225SBK4**	365
33	11787	1.2	44.6	58600			**A903_44.6 P225 BX225SBK4**	365
38	10260	1.4	38.8	58300			**A903_38.8 P225 BX225SBK4**	365
41	9471	1.5	35.8	57800			**A903_35.8 P225 BX225SBK4**	365
47	8328	1.7	31.5	57200			**A903_31.5 P225 BX225SBK4**	365
51	7687	1.7	29.1	56600			**A903_29.1 P225 BX225SBK4**	365
60	6477	1.0	24.5	38300			**A803_24.5 P225 BX225SBK4**	362
61	6374	2.1	24.1	55200			**A903_24.1 P225 BX225SBK4**	365
65	5979	1.0	22.6	38100			**A803_22.6 P225 BX225SBK4**	362
67	5883	2.1	22.3	54500			**A903_22.3 P225 BX225SBK4**	365
70	5552	2.2	21.0	54000			**A903_21.0 P225 BX225SBK4**	365
71	5539	1.2	20.9	38000			**A803_20.9 P225 BX225SBK4**	362
76	5125	2.3	19.4	53200			**A903_19.4 P225 BX225SBK4**	365
77	5112	1.2	19.3	37700			**A803_19.3 P225 BX225SBK4**	362
88	4461	2.7	16.9	52000			**A903_16.9 P225 BX225SBK4**	365
88	4425	1.5	16.7	37300			**A803_16.7 P225 BX225SBK4**	362
95	4118	2.7	15.6	51100			**A903_15.6 P225 BX225SBK4**	365
96	4085	1.5	15.5	36900			**A803_15.5 P225 BX225SBK4**	362
108	3621	3.1	13.7	49900			**A903_13.7 P225 BX225SBK4**	365
111	3515	1.9	13.3	36200			**A803_13.3 P225 BX225SBK4**	362
117	3342	3.1	12.6	49000			**A903_12.6 P225 BX225SBK4**	365
121	3244	1.9	12.3	35700			**A803_12.3 P225 BX225SBK4**	362
139	2816	2.3	10.7	34900			**A803_10.7 P225 BX225SBK4**	362
141	2771	3.5	10.5	47100			**A903_10.5 P225 BX225SBK4**	365
151	2600	2.3	9.8	34400			**A803_9.8 P225 BX225SBK4**	362
153	2558	3.5	9.7	46200			**A903_9.7 P225 BX225SBK4**	365

55 kW

n_2 min-1	M_2 Nm	S	i	R_{n2} N			IEC IE3	
33	14406	1.0	44.6	53900			**A903_44.6 P250 BX250MAK4**	365
38	12540	1.1	38.8	54100			**A903_38.8 P250 BX250MAK4**	365
41	11575	1.2	35.8	54000			**A903_35.8 P250 BX250MAK4**	365
47	10179	1.4	31.5	53800			**A903_31.5 P250 BX250MAK4**	365
51	9396	1.4	29.1	53400			**A903_29.1 P250 BX250MAK4**	365
61	7790	1.7	24.1	52600			**A903_24.1 P250 BX250MAK4**	365
67	7191	1.7	22.3	52000			**A903_22.3 P250 BX250MAK4**	365
70	6786	1.8	21.0	51700			**A903_21.0 P250 BX250MAK4**	365
76	6264	1.8	19.4	51100			**A903_19.4 P250 BX250MAK4**	365
88	5452	2.2	16.9	50100			**A903_16.9 P250 BX250MAK4**	365
95	5033	2.2	15.6	49400			**A903_15.6 P250 BX250MAK4**	365
108	4425	2.5	13.7	48400			**A903_13.7 P250 BX250MAK4**	365
117	4085	2.6	12.6	47600			**A903_12.6 P250 BX250MAK4**	365
141	3387	2.9	10.5	45900			**A903_10.5 P250 BX250MAK4**	365
153	3126	2.9	9.7	45100			**A903_9.7 P250 BX250MAK4**	365

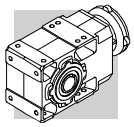

39 GEARBOX RATING CHARTS

A 10 — 150 Nm

	i	n_1 = 2800 min^{-1}					n_1 = 1400 min^{-1}					
		n_2 min^{-1}	M_{n2} Nm	P_{n1} kW	R_{n1} N	R_{n2} N	n_2 min^{-1}	M_{n2} Nm	P_{n1} kW	R_{n1} N	R_{n2} N	
A 10 2_5.5	5.5	512	73	4.2	—	1830	256	73	2.1	960	2460	
A 10 2_6.3	6.3	442	80	3.9	—	1900	221	80	2.0	830	2560	
A 10 2_7.2	7.2	388	92	4.0	—	1910	194	93	2.0	630	2600	
A 10 2_8.5	8.5	329	92	3.4	—	2060	164	93	1.7	720	2790	
A 10 2_9.6	9.6	291	102	3.3	—	2090	146	128	2.1	—	2650	
A 10 2_10.6	10.6	265	125	3.7	540	2010	133	150	2.2	810	2590	
A 10 2_12.3	12.3	228	110	2.8	—	2280	114	138	1.7	—	2880	
A 10 2_13.9	13.9	201	135	3.0	620	2220	101	150	1.7	1080	2960	
A 10 2_16.4	16.4	170	140	2.7	610	2370	85	150	1.4	1140	3200	
A 10 2_18.6	18.6	151	147	2.5	650	2460	75	150	1.3	1180	3380	
A 10 2_21.4	21.4	131	150	2.2	650	2610	66	150	1.1	1200	3600	
A 10 2_23.8	23.8	118	150	2.0	750	2750	59	150	0.98	1220	3780	303
A 10 2_25.5	25.5	110	150	1.8	750	2840	55	150	0.92	1220	3900	
A 10 2_28.6	28.6	98	150	1.6	830	3000	49	150	0.82	1250	4100	
A 10 2_32.2	32.2	87	150	1.5	880	3170	43	150	0.73	1270	4310	
A 10 2_35.1	35.1	80	150	1.3	880	3300	40	150	0.67	1270	4470	
A 10 2_40.9	40.9	69	150	1.1	910	3530	34	150	0.57	1300	4770	
A 10 2_45.4	45.4	62	150	1.0	910	3700	31	150	0.52	1300	4980	
A 10 2_51.3	51.3	55	150	0.91	910	3910	27.3	150	0.46	1290	5240	
A 10 2_58.6	58.6	48	150	0.80	920	4140	23.9	150	0.40	1300	5500	
A 10 2_65.9	65.9	42	150	0.71	920	4360	21.2	150	0.35	1300	5500	
A 10 2_76.4	76.4	37	150	0.61	930	4640	18.3	150	0.31	1300	5500	
A 10 2_91.6	91.6	31	130	0.44	1020	5160	15.3	130	0.22	1300	5500	

(—) Contact our technical service department advising radial load data (rotation direction, orientation, position)

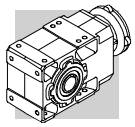

A 10 — 150 Nm

	i	n_1 = 900 min^{-1}					n_1 = 500 min^{-1}					
		n_2 min^{-1}	M_{n2} Nm	P_{n1} kW	R_{n1} N	R_{n2} N	n_2 min^{-1}	M_{n2} Nm	P_{n1} kW	R_{n1} N	R_{n2} N	
A 10 2_5.5	5.5	165	73	1.3	1300	2950	91	73	0.74	1300	3720	
A 10 2_6.3	6.3	142	80	1.3	1300	3070	79	80	0.70	1300	4100	
A 10 2_7.2	7.2	125	93	1.3	1160	3130	69	93	0.72	1300	3970	
A 10 2_8.5	8.5	106	95	1.1	1200	3330	59	110	0.72	1300	4100	
A 10 2_9.6	9.6	94	128	1.3	500	3230	52	128	0.74	1300	4160	
A 10 2_10.6	10.6	85	150	1.4	1300	3200	47	150	0.79	1300	4160	
A 10 2_12.3	12.3	73	150	1.2	180	3420	41	150	0.68	1030	4430	
A 10 2_13.9	13.9	65	150	1.1	1300	3630	36	150	0.60	1300	4680	
A 10 2_16.4	16.4	55	150	0.91	1300	3900	30	150	0.51	1300	5010	
A 10 2_18.6	18.6	48	150	0.81	1300	4120	26.9	150	0.45	1300	5270	
A 10 2_21.4	21.4	42	150	0.70	1300	4370	23.4	150	0.39	1300	5500	
A 10 2_23.8	23.8	38	150	0.63	1300	4570	21.0	150	0.35	1300	5500	303
A 10 2_25.5	25.5	35	150	0.59	1300	4710	19.6	150	0.33	1300	5500	
A 10 2_28.6	28.6	31	150	0.53	1300	4940	17.5	150	0.29	1300	5500	
A 10 2_32.2	32.2	28.0	150	0.47	1300	5190	15.5	150	0.26	1300	5500	
A 10 2_35.1	35.1	25.6	150	0.43	1300	5380	14.2	150	0.24	1300	5500	
A 10 2_40.9	40.9	22.0	150	0.37	1300	5500	12.2	150	0.20	1300	5500	
A 10 2_45.4	45.4	19.8	150	0.33	1300	5500	11.0	150	0.18	1300	5500	
A 10 2_51.3	51.3	17.6	150	0.29	1300	5500	9.8	150	0.16	1300	5500	
A 10 2_58.6	58.6	15.4	150	0.26	1300	5500	8.5	150	0.14	1300	5500	
A 10 2_65.9	65.9	13.7	150	0.23	1300	5500	7.6	150	0.13	1300	5500	
A 10 2_76.4	76.4	11.8	150	0.20	1300	5500	6.5	150	0.11	1300	5500	
A 10 2_91.6	91.6	9.8	130	0.14	1300	5500	5.5	130	0.08	1300	5500	

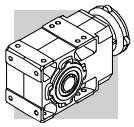

A 20 — 250 Nm

	i	n_1 = 2800 min^{-1}					n_1 = 1400 min^{-1}					
		n_2 min^{-1}	M_{n2} Nm	P_{n1} kW	R_{n1} N	R_{n2} N	n_2 min^{-1}	M_{n2} Nm	P_{n1} kW	R_{n1} N	R_{n2} N	
A 20 2_5.4	5.4	523	96	5.6	610	1910	262	121	3.5	770	2400	
A 20 2_6.5	6.5	428	107	5.1	490	2010	214	135	3.2	610	2530	
A 20 2_7.3	7.3	384	113	4.8	510	2070	192	143	3.1	630	2600	
A 20 2_8.4	8.4	334	116	4.3	510	2180	167	146	2.7	650	2750	
A 20 2_9.4	9.4	299	122	4.1	530	2260	149	154	2.6	660	2840	
A 20 2_10.3	10.3	271	183	5.5	650	1970	135	225	3.4	890	2520	
A 20 2_12.0	12.0	234	128	3.3	550	2280	117	161	2.1	690	3120	
A 20 2_14.1	14.1	199	199	4.4	750	2210	99	245	2.7	960	2820	
A 20 2_16.2	16.2	173	209	4.0	700	2310	87	250	2.4	1040	2990	
A 20 2_18.1	18.1	155	216	3.7	760	2400	77	250	2.2	1210	3170	
A 20 2_21.2	21.2	132	226	3.3	710	2540	66	250	1.8	1290	3430	
A 20 2_23.1	23.1	121	232	3.1	710	2620	61	250	1.7	1360	3580	
A 20 2_26.5	26.5	106	241	2.8	660	2750	53	250	1.5	1410	3820	
A 20 2_29.2	29.2	96	249	2.7	670	2850	48	250	1.3	1510	4000	
A 20 2_31.3	31.3	89	250	2.5	660	2940	45	250	1.2	1510	4130	
A 20 2_35.4	35.4	79	250	2.2	800	3140	40	250	1.1	1650	4380	
A 20 2_39.6	39.6	71	250	2.0	880	3320	35	250	0.98	1710	4600	
A 20 2_43.2	43.2	65	250	1.8	880	3460	32	250	0.90	1710	4790	
A 20 2_48.3	48.3	58	250	1.6	920	3650	29.0	250	0.81	1720	5030	307
A 20 2_53.7	53.7	52	250	1.5	920	3840	26.1	250	0.73	1720	5270	
A 20 2_63.1	63.1	44	245	1.2	1040	4180	22.2	245	0.61	1740	5680	
A 20 2_71.0	71.0	39	210	0.92	1360	4640	19.7	210	0.46	1790	6200	
A 20 2_79.9	79.9	35	210	0.82	1360	4880	17.5	210	0.41	1790	6200	
A 20 2_92.3	92.3	30	200	0.68	1380	5250	15.2	200	0.34	1810	6200	
A 20 3_109.2	109.2	25.6	165	0.49	1180	5900	12.8	205	0.30	1300	6200	
A 20 3_120.5	120.5	23.2	168	0.45	1130	6110	11.6	210	0.28	1300	6200	
A 20 3_129.1	129.1	21.7	175	0.44	1210	6200	10.8	215	0.27	1300	6200	
A 20 3_146.1	146.1	19.2	183	0.40	1160	6200	9.6	230	0.25	1300	6200	
A 20 3_163.4	163.4	17.1	190	0.37	1240	6200	8.6	235	0.23	1300	6200	
A 20 3_178.3	178.3	15.7	195	0.35	1200	6200	7.9	245	0.22	1300	6200	
A 20 3_199.2	199.2	14.1	200	0.32	1270	6200	7.0	250	0.20	1300	6200	
A 20 3_221.3	221.3	12.7	203	0.30	1240	6200	6.3	250	0.18	1300	6200	
A 20 3_260.5	260.5	10.8	214	0.26	1270	6200	5.4	250	0.15	1300	6200	
A 20 3_292.8	292.8	9.6	218	0.24	1300	6200	4.8	250	0.14	1300	6200	
A 20 3_329.4	329.4	8.5	221	0.22	1300	6200	4.3	250	0.12	1300	6200	
A 20 3_380.9	380.9	7.4	226	0.19	1300	6200	3.7	250	0.11	1300	6200	

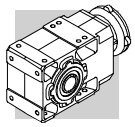

A 20 — 250 Nm

	i	n_1 = 900 min^{-1}					n_1 = 500 min^{-1}					
		n_2 min^{-1}	M_{n2} Nm	P_{n1} kW	R_{n1} N	R_{n2} N	n_2 min^{-1}	M_{n2} Nm	P_{n1} kW	R_{n1} N	R_{n2} N	
A 20 2_5.4	5.4	168	140	2.6	900	2780	93	170	1.8	1100	3390	
A 20 2_6.5	6.5	138	156	2.4	720	2930	76	190	1.6	860	3570	
A 20 2_7.3	7.3	123	165	2.3	740	3020	69	201	1.5	890	3670	
A 20 2_8.4	8.4	108	170	2.0	730	3180	60	206	1.4	910	3870	
A 20 2_9.4	9.4	96	179	1.9	760	3290	53	210	1.2	1090	4050	
A 20 2_10.3	10.3	87	250	2.4	1190	2990	48	250	1.3	2200	3980	
A 20 2_12.0	12.0	75	187	1.6	790	2990	42	210	0.98	1336	4510	
A 20 2_14.1	14.1	64	250	1.8	1610	3490	36	250	0.99	2200	4590	
A 20 2_16.2	16.2	56	250	1.6	1690	3730	31	250	0.86	2200	4880	
A 20 2_18.1	18.1	50	250	1.4	1860	3930	27.6	250	0.77	2200	5140	
A 20 2_21.2	21.2	42	250	1.2	1940	4230	23.6	250	0.66	2200	5500	
A 20 2_23.1	23.1	39	250	1.1	1970	4400	21.6	250	0.60	2200	5710	
A 20 2_26.5	26.5	34	250	0.95	1980	4680	18.9	250	0.53	2200	6050	
A 20 2_29.2	29.2	31	250	0.86	2000	4890	17.1	250	0.48	2200	6200	
A 20 2_31.3	31.3	28.7	250	0.80	2000	5040	16.0	250	0.44	2200	6200	
A 20 2_35.4	35.4	25.4	250	0.71	2020	5330	14.1	250	0.39	2200	6200	
A 20 2_39.6	39.6	22.7	250	0.63	2040	5590	12.6	250	0.35	2200	6200	
A 20 2_43.2	43.2	20.8	250	0.58	2040	5800	11.6	250	0.32	2200	6200	
A 20 2_48.3	48.3	18.6	250	0.52	2040	6080	10.4	250	0.29	2200	6200	307
A 20 2_53.7	53.7	16.8	250	0.47	2050	6200	9.3	250	0.26	2200	6200	
A 20 2_63.1	63.1	14.3	245	0.39	2060	6200	7.9	245	0.22	2200	6200	
A 20 2_71.0	71.0	12.7	210	0.30	2120	6200	7.0	210	0.16	2200	6200	
A 20 2_79.9	79.9	11.3	210	0.26	2120	6200	6.3	210	0.15	2200	6200	
A 20 2_92.3	92.3	9.7	200	0.22	2140	6200	5.4	200	0.12	2200	6200	
A 20 3_109.2	109.2	8.2	240	0.23	1300	6200	4.6	250	0.13	1300	6200	
A 20 3_120.5	120.5	7.5	245	0.21	1300	6200	4.1	250	0.12	1300	6200	
A 20 3_129.1	129.1	7.0	250	0.20	1300	6200	3.9	250	0.11	1300	6200	
A 20 3_146.1	146.1	6.2	250	0.18	1300	6200	3.4	250	0.10	1300	6200	
A 20 3_163.4	163.4	5.5	250	0.16	1300	6200	3.1	250	0.09	1300	6200	
A 20 3_178.3	178.3	5.0	250	0.15	1300	6200	2.8	250	0.08	1300	6200	
A 20 3_199.2	199.2	4.5	250	0.13	1300	6200	2.5	250	0.07	1300	6200	
A 20 3_221.3	221.3	4.1	250	0.12	1300	6200	2.3	250	0.06	1300	6200	
A 20 3_260.5	260.5	3.5	250	0.10	1300	6200	1.9	250	0.06	1300	6200	
A 20 3_292.8	292.8	3.1	250	0.09	1300	6200	1.7	250	0.05	1300	6200	
A 20 3_329.4	329.4	2.7	250	0.08	1300	6200	1.5	250	0.04	1300	6200	
A 20 3_380.9	380.9	2.4	250	0.07	1300	6200	1.3	250	0.04	1300	6200	

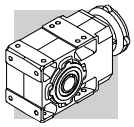

A 30 — 410 Nm

	i	n_1 = 2800 min^{-1}					n_1 = 1400 min^{-1}					
		n_2 min^{-1}	M_{n2} Nm	P_{n1} kW	R_{n1} N	R_{n2} N	n_2 min^{-1}	M_{n2} Nm	P_{n1} kW	R_{n1} N	R_{n2} N	
A 30 2_5.4	5.4	517	175	10.1	1130	2480	259	220	6.3	1430	3130	
A 30 2_6.4	6.4	437	185	9.0	1120	2630	218	230	5.6	1470	3330	
A 30 2_7.0	7.0	399	194	8.6	1140	2690	199	245	5.4	1430	3380	
A 30 2_8.5	8.5	331	200	7.4	1220	2900	165	250	4.6	1570	3660	
A 30 2_9.3	9.3	301	214	7.2	1140	2950	150	270	4.5	1440	3710	
A 30 2_10.5	10.5	268	278	8.3	1800	2770	134	340	5.1	2200	3550	
A 30 2_11.8	11.8	238	230	6.1	1130	3200	119	290	3.8	1420	4030	
A 30 2_13.6	13.6	206	301	6.9	1830	3030	103	370	4.3	2200	3870	
A 30 2_16.3	16.3	171	318	6.1	1830	3240	86	385	3.7	2200	4170	
A 30 2_18.0	18.0	156	327	5.7	1840	3350	78	400	3.5	2200	4290	
A 30 2_20.5	20.5	136	340	5.2	1830	3510	68	410	3.1	2200	4530	
A 30 2_22.8	22.8	123	351	4.8	1850	3640	62	410	2.8	2200	4770	
A 30 2_26.5	26.5	106	367	4.3	1840	3850	53	410	2.4	2200	5150	
A 30 2_29.3	29.3	96	378	4.0	1847	3980	48	410	2.2	2200	5400	
A 30 2_33.4	33.4	84	393	3.7	1840	4170	42	410	1.9	2200	5750	
A 30 2_36.6	36.6	76	404	3.4	1840	4310	38	410	1.7	2200	6010	
A 30 2_39.3	39.3	71	410	3.3	1810	4430	36	410	1.6	2200	6200	
A 30 2_43.4	43.4	64	410	2.9	1850	4660	32	410	1.5	2200	6490	
A 30 2_48.3	48.3	58	410	2.6	1860	4920	29.0	410	1.3	2200	6810	
A 30 2_52.7	52.7	53	410	2.4	1860	5130	26.6	410	1.2	2200	7080	311
A 30 2_59.4	59.4	47	400	2.1	1890	5500	23.6	400	1.0	2200	7530	
A 30 2_66.0	66.0	42	390	1.8	1900	5840	21.2	390	0.92	2200	7940	
A 30 2_76.5	76.5	37	350	1.4	1950	6480	18.3	350	0.71	2200	8690	
A 30 2_86.7	86.7	32	320	1.2	2000	7010	16.2	320	0.58	2200	9310	
A 30 2_97.5	97.5	28.7	300	0.96	2020	7480	14.4	300	0.48	2200	9600	
A 30 3_109.1	109.1	25.7	240	0.71	1300	8240	12.8	300	0.44	1300	9600	
A 30 3_120.5	120.5	23.2	243	0.65	1120	8540	11.6	300	0.40	1300	9600	
A 30 3_137.4	137.4	20.4	250	0.59	1300	8950	10.2	315	0.37	1300	9600	
A 30 3_150.7	150.7	18.6	261	0.56	1170	9210	9.3	330	0.35	1300	9600	
A 30 3_161.4	161.4	17.3	270	0.54	1300	9410	8.7	340	0.34	1300	9600	
A 30 3_178.5	178.5	15.7	274	0.49	1210	9600	7.8	345	0.31	1300	9600	
A 30 3_198.5	198.5	14.1	280	0.45	1300	9600	7.1	350	0.28	1300	9600	
A 30 3_216.6	216.6	12.9	287	0.43	1240	9600	6.5	360	0.27	1300	9600	
A 30 3_244.3	244.3	11.5	295	0.39	1300	9600	5.7	370	0.24	1300	9600	
A 30 3_271.5	271.5	10.3	301	0.36	1280	9600	5.2	380	0.23	1300	9600	
A 30 3_314.5	314.5	8.9	309	0.32	1300	9600	4.5	390	0.20	1300	9600	
A 30 3_356.3	356.3	7.9	320	0.29	1300	9600	3.9	370	0.17	1300	9600	
A 30 3_400.8	400.8	7.0	320	0.26	1300	9600	3.5	360	0.14	1300	9600	

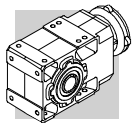

A 30 — 410 Nm

	i	n_1 = 900 min^{-1}					n_1 = 500 min^{-1}					
		n_2 min^{-1}	M_{n2} Nm	P_{n1} kW	R_{n1} N	R_{n2} N	n_2 min^{-1}	M_{n2} Nm	P_{n1} kW	R_{n1} N	R_{n2} N	
A 30 2_5.4	5.4	166	255	4.7	1660	3630	92	300	3.1	2200	4470	
A 30 2_6.4	6.4	140	270	4.2	1630	3830	78	300	2.6	2200	4830	
A 30 2_7.0	7.0	128	284	4.1	1650	3920	71	300	2.4	2200	5040	
A 30 2_8.5	8.5	106	290	3.4	1810	4240	59	300	2.0	2200	5470	
A 30 2_9.3	9.3	97	300	3.2	1900	4380	54	300	1.8	2200	5710	
A 30 2_10.5	10.5	86	391	3.7	2200	4130	48	410	2.2	2200	5400	
A 30 2_11.8	11.8	76	300	2.6	2200	4880	42	300	1.4	2200	6320	
A 30 2_13.6	13.6	66	410	3.0	2200	4600	37	410	1.7	2200	6110	
A 30 2_16.3	16.3	55	410	2.5	2200	5044	31	410	1.4	2200	6650	
A 30 2_18.0	18.0	50	410	2.3	2200	5280	27.8	410	1.3	2200	6940	
A 30 2_20.5	20.5	44	410	2.0	2200	5630	24.3	410	1.1	2200	7360	
A 30 2_22.8	22.8	40	410	1.8	2200	5910	22.0	410	1.0	2200	7700	
A 30 2_26.5	26.5	34	410	1.5	2200	6340	18.8	410	0.86	2200	8230	
A 30 2_29.3	29.3	31	410	1.4	2200	6640	17.1	410	0.78	2200	8590	
A 30 2_33.4	33.4	26.9	410	1.2	2200	7040	15.0	410	0.68	2200	9080	
A 30 2_36.6	36.6	24.6	410	1.1	2200	7340	13.6	410	0.62	2200	9440	
A 30 2_39.3	39.3	22.9	410	1.0	2200	7560	12.7	410	0.58	2200	9600	
A 30 2_43.4	43.4	20.7	410	0.95	2200	7900	11.5	410	0.53	2200	9600	
A 30 2_48.3	48.3	18.6	410	0.85	2200	8270	10.4	410	0.47	2200	9600	
A 30 2_52.7	52.7	17.1	410	0.78	2200	8590	9.5	410	0.43	2200	9600	311
A 30 2_59.4	59.4	15.1	400	0.67	2200	9090	8.4	400	0.37	2200	9600	
A 30 2_66.0	66.0	13.6	390	0.59	2200	9560	7.6	390	0.33	2200	9600	
A 30 2_76.5	76.5	11.8	350	0.46	2200	9600	6.5	350	0.25	2200	9600	
A 30 2_86.7	86.7	10.4	320	0.37	2200	9600	5.8	320	0.21	2200	9600	
A 30 2_97.5	97.5	9.2	300	0.31	2200	9600	5.1	300	0.17	2200	9600	
A 30 3_109.1	109.1	8.3	350	0.33	1300	9600	4.6	370	0.20	1300	9600	
A 30 3_120.5	120.5	7.5	354	0.30	1300	9600	4.2	410	0.20	1300	9600	
A 30 3_137.4	137.4	6.5	370	0.28	1300	9600	3.6	410	0.17	1300	9600	
A 30 3_150.7	150.7	6.0	381	0.26	1300	9600	3.3	410	0.16	1300	9600	
A 30 3_161.4	161.4	5.6	390	0.25	1300	9600	3.1	410	0.15	1300	9600	
A 30 3_178.5	178.5	5.0	400	0.23	1300	9600	2.8	410	0.13	1300	9600	
A 30 3_198.5	198.5	4.5	410	0.21	1300	9600	2.5	410	0.12	1300	9600	
A 30 3_216.6	216.6	4.2	410	0.20	1300	9600	2.3	410	0.11	1300	9600	
A 30 3_244.3	244.3	3.7	410	0.17	1300	9600	2.0	410	0.10	1300	9600	
A 30 3_271.5	271.5	3.3	410	0.16	1300	9600	1.8	410	0.09	1300	9600	
A 30 3_314.5	314.5	2.9	410	0.13	1300	9600	1.6	410	0.07	1300	9600	
A 30 3_356.3	356.3	2.5	380	0.11	1300	9600	1.4	380	0.06	1300	9600	
A 30 3_400.8	400.8	2.2	360	0.09	1300	9600	1.2	360	0.05	1300	9600	

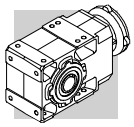

A 35 — 600 Nm

	i	n_1 = 2800 min^{-1}					n_1 = 1400 min^{-1}					
		n_2 min^{-1}	M_{n2} Nm	P_{n1} kW	R_{n1} N	R_{n2} N	n_2 min^{-1}	M_{n2} Nm	P_{n1} kW	R_{n1} N	R_{n2} N	
A 35 2_5.4	5.4	517	246	14.2	1420	4000	259	310	8.9	1790	5050	
A 35 2_6.4	6.4	437	262	12.7	1420	4230	218	330	8.0	1790	5330	
A 35 2_7.0	7.0	399	278	12.3	1410	4320	199	350	7.8	1790	5440	
A 35 2_8.5	8.5	331	286	10.5	1450	4650	165	360	6.6	1830	5850	
A 35 2_9.3	9.3	301	302	10.1	1450	4760	150	380	6.4	1830	6000	
A 35 2_10.6	10.6	263	310	9.1	1440	5010	132	390	5.7	1830	6310	
A 35 2_11.8	11.8	238	317	8.4	1480	5200	119	400	5.3	1860	6550	
A 35 2_13.1	13.1	214	400	10.9	1630	4470	107	550	6.6	2100	5780	
A 35 2_15.5	15.5	181	430	10.0	1620	4670	90	570	5.7	2120	6190	
A 35 2_17.0	17.0	165	465	9.7	1620	4730	83	600	5.5	2130	6310	
A 35 2_20.4	20.4	137	500	8.4	1630	5080	69	600	4.6	2170	6930	
A 35 2_22.5	22.5	125	540	7.8	1660	5290	62	600	4.2	2200	7260	
A 35 2_25.7	25.7	109	585	7.1	1640	5540	55	600	3.6	2200	7740	
A 35 2_28.4	28.4	98	600	6.6	1660	5760	49	600	3.3	2200	8130	
A 35 2_33.2	33.2	84	600	5.6	910	6240	42	600	2.8	2200	8730	
A 35 2_36.6	36.6	76	600	5.1	1080	6560	38	600	2.6	2200	9140	
A 35 2_41.8	41.8	67	600	4.5	1140	7010	34	600	2.2	2200	9700	
A 35 2_45.8	45.8	61	600	4.1	1260	7330	31	600	2.0	2200	10100	
A 35 2_49.1	49.1	57	600	3.8	1260	7580	28.5	600	1.9	2200	10400	
A 35 2_54.3	54.3	52	600	3.4	1360	7950	25.8	600	1.7	2200	10900	315
A 35 2_60.4	60.4	46	600	3.1	1470	8360	23.2	600	1.6	2200	11400	
A 35 2_65.8	65.8	43	600	2.8	1470	8700	21.3	600	1.4	2200	11800	
A 35 2_74.3	74.3	38	600	2.5	1560	9200	18.8	600	1.3	2200	12000	
A 35 2_82.5	82.5	34	600	2.3	1560	9650	17.0	600	1.1	2200	12000	
A 35 2_95.6	95.6	29.3	540	1.8	1860	10600	14.6	540	0.88	2200	12000	
A 35 3_105.5	105.5	26.5	430	1.3	550	12000	13.3	525	0.80	780	12000	
A 35 3_116.9	116.9	24.0	455	1.3	650	12000	12.0	560	0.77	870	12000	
A 35 3_136.3	136.3	20.5	470	1.1	870	12000	10.3	575	0.68	1110	12000	
A 35 3_150.6	150.6	18.6	495	1.1	900	12000	9.3	600	0.64	1160	12000	
A 35 3_171.8	171.8	16.3	505	0.95	960	12000	8.1	600	0.56	1250	12000	
A 35 3_188.3	188.3	14.9	525	0.90	990	12000	7.4	600	0.51	1300	12000	
A 35 3_201.8	201.8	13.9	525	0.84	1020	12000	6.9	600	0.48	1300	12000	
A 35 3_223.2	223.2	12.5	545	0.79	1050	12000	6.3	600	0.43	1300	12000	
A 35 3_248.1	248.1	11.3	565	0.73	1080	12000	5.6	600	0.39	1300	12000	
A 35 3_270.7	270.7	10.3	570	0.68	1110	12000	5.2	600	0.36	1300	12000	
A 35 3_305.4	305.4	9.2	585	0.62	1140	12000	4.6	600	0.32	1300	12000	
A 35 3_339.3	339.3	8.3	520	0.49	1210	12000	4.1	520	0.25	1300	12000	
A 35 3_393.2	393.2	7.1	465	0.38	1260	12000	3.6	465	0.19	1300	12000	

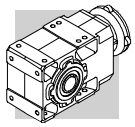

A 35 — 600 Nm

	i	n_1 = 900 min^{-1}					n_1 = 500 min^{-1}					
		n_2 min^{-1}	M_{n2} Nm	P_{n1} kW	R_{n1} N	R_{n2} N	n_2 min^{-1}	M_{n2} Nm	P_{n1} kW	R_{n1} N	R_{n2} N	
A 35 2_5.4	5.4	166	340	6.3	2150	5940	92	340	3.5	2200	7600	
A 35 2_6.4	6.4	140	350	5.5	2190	6340	78	350	3.0	2200	8090	
A 35 2_7.0	7.0	128	370	5.3	2200	6490	71	370	2.9	2200	8290	
A 35 2_8.5	8.5	106	380	4.5	2200	6970	59	380	2.5	2200	8890	
A 35 2_9.3	9.3	97	400	4.3	2200	7160	54	400	2.4	2200	9140	
A 35 2_10.6	10.6	85	400	3.8	2200	7570	47	400	2.1	2200	9650	
A 35 2_11.8	11.8	76	400	3.4	2200	7910	42	400	1.9	2200	10100	
A 35 2_13.1	13.1	69	600	4.6	2200	6910	38	600	2.6	2200	9140	
A 35 2_15.5	15.5	58	600	3.9	2090	7510	32	600	2.2	2200	9860	
A 35 2_17.0	17.0	53	600	3.5	2200	7840	29.5	600	2.0	2200	10300	
A 35 2_20.4	20.4	44	600	2.9	2200	8560	24.5	600	1.6	2200	11100	
A 35 2_22.5	22.5	40	600	2.7	2200	8950	22.2	600	1.5	2200	11600	
A 35 2_25.7	25.7	35	600	2.3	2200	9500	19.5	600	1.3	2200	12000	
A 35 2_28.4	28.4	32	600	2.1	2200	9950	17.6	600	1.2	2200	12000	
A 35 2_33.2	33.2	27.1	600	1.8	2200	10700	15.1	600	1.0	2200	12000	
A 35 2_36.6	36.6	24.6	600	1.6	2200	11100	13.7	600	0.91	2200	12000	
A 35 2_41.8	41.8	21.5	600	1.4	2200	11800	12.0	600	0.80	2200	12000	
A 35 2_45.8	45.8	19.6	600	1.3	2200	12000	10.9	600	0.73	2200	12000	
A 35 2_49.1	49.1	18.3	600	1.2	2200	12000	10.2	600	0.68	2200	12000	
A 35 2_54.3	54.3	16.6	600	1.1	2200	12000	9.2	600	0.62	2200	12000	315
A 35 2_60.4	60.4	14.9	600	1.0	2200	12000	8.3	600	0.55	2200	12000	
A 35 2_65.8	65.8	13.7	600	0.91	2200	12000	7.6	600	0.51	2200	12000	
A 35 2_74.3	74.3	12.1	600	0.81	2200	12000	6.7	600	0.45	2200	12000	
A 35 2_82.5	82.5	10.9	600	0.73	2200	12000	6.1	600	0.40	2200	12000	
A 35 2_95.6	95.6	9.4	540	0.57	2200	12000	5.2	540	0.31	2200	12000	
A 35 3_105.5	105.5	8.5	600	0.59	940	12000	4.7	600	0.33	1300	12000	
A 35 3_116.9	116.9	7.7	600	0.53	1230	12000	4.3	600	0.30	1300	12000	
A 35 3_136.3	136.3	6.6	600	0.46	1300	12000	3.7	600	0.25	1300	12000	
A 35 3_150.6	150.6	6.0	600	0.41	1300	12000	3.3	600	0.23	1300	12000	
A 35 3_171.8	171.8	5.2	600	0.36	1300	12000	2.9	600	0.20	1300	12000	
A 35 3_188.3	188.3	4.8	600	0.33	1300	12000	2.7	600	0.18	1300	12000	
A 35 3_201.8	201.8	4.5	600	0.31	1300	12000	2.5	600	0.17	1300	12000	
A 35 3_223.2	223.2	4.0	600	0.28	1300	12000	2.2	600	0.15	1300	12000	
A 35 3_248.1	248.1	3.6	600	0.25	1300	12000	2.0	600	0.14	1300	12000	
A 35 3_270.7	270.7	3.3	600	0.23	1300	12000	1.8	600	0.13	1300	12000	
A 35 3_305.4	305.4	2.9	600	0.20	1300	12000	1.6	600	0.11	1300	12000	
A 35 3_339.3	339.3	2.7	520	0.16	1300	12000	1.5	520	0.09	1300	12000	
A 35 3_393.2	393.2	2.3	465	0.12	1300	12000	1.3	465	0.07	1300	12000	

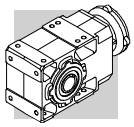

A 41 — 850 Nm

	i	n_1 = 2800 min^{-1}					n_1 = 1400 min^{-1}					
		n_2 min^{-1}	M_{n2} Nm	P_{n1} kW	R_{n1} N	R_{n2} N	n_2 min^{-1}	M_{n2} Nm	P_{n1} kW	R_{n1} N	R_{n2} N	
A 41 2_5.2	5.2	534	450	27	1790	4350	267	550	16.4	2450	5560	
A 41 2_7.1	7.1	393	490	22	1890	4850	197	550	12.0	2670	6430	
A 41 2_8.3	8.3	336	510	19.1	1900	5140	168	550	10.3	2750	6920	
A 41 2_9.2	9.2	304	530	18.0	1980	5300	152	550	9.3	2860	7240	
A 41 2_10.1	10.1	276	435	13.4	2680	6030	138	535	8.2	3390	7650	
A 41 2_11.7	11.7	238	550	14.6	2050	5870	119	550	7.3	2950	8070	
A 41 2_13.8	13.8	204	480	10.9	2690	6680	102	585	6.6	3430	8510	
A 41 2_16.1	16.1	174	500	9.7	2700	7070	87	610	5.9	3430	9000	
A 41 2_17.8	17.8	158	515	9.0	2730	7310	79	630	5.5	3470	9300	
A 41 2_22.7	22.7	123	550	7.6	2730	7970	62	680	4.7	3460	10100	
A 41 2_28.3	28.3	99	595	6.6	2670	8570	49	730	4.0	3450	10900	
A 41 2_35.9	35.9	78	635	5.5	2590	9320	39	780	3.4	3410	11800	
A 41 2_45.1	45.1	62	680	4.7	2500	10100	31	830	2.9	3330	12800	
A 41 2_48.3	48.3	58	690	4.5	2430	10300	29.0	850	2.7	3200	13100	
A 41 2_53.1	53.1	53	700	4.1	2470	10700	26.3	850	2.5	3330	13700	
A 41 2_58.8	58.8	48	730	3.9	2390	11100	23.8	850	2.3	3460	14300	319
A 41 2_64.2	64.2	44	740	3.6	2320	11500	21.8	850	2.1	3460	14800	
A 41 2_71.3	71.3	39	780	3.4	2120	11800	19.6	850	1.9	3470	15000	
A 41 2_79.2	79.2	35	800	3.1	1990	12300	17.7	800	1.6	3500	15000	
A 41 3_92.8	92.8	30	650	2.3	270	14000	15.1	800	1.4	430	15000	
A 41 3_115.9	115.9	24.2	800	2.2	310	14600	12.1	850	1.2	980	15000	
A 41 3_146.9	146.9	19.1	850	1.9	790	15000	9.5	850	0.93	1640	15000	
A 41 3_184.4	184.4	15.2	850	1.5	1290	15000	7.6	850	0.74	1770	15000	
A 41 3_197.5	197.5	14.2	850	1.4	1360	15000	7.1	850	0.69	1790	15000	
A 41 3_217.4	217.4	12.9	850	1.3	1390	15000	6.4	850	0.63	1820	15000	
A 41 3_240.6	240.6	11.6	850	1.1	1410	15000	5.8	850	0.57	1840	15000	
A 41 3_262.5	262.5	10.7	850	1.0	1430	15000	5.3	850	0.52	1860	15000	
A 41 3_291.7	291.7	9.6	850	0.94	1450	15000	4.8	850	0.47	1880	15000	
A 41 3_324.2	324.2	8.6	850	0.84	1470	15000	4.3	850	0.42	1900	15000	
A 41 3_376.8	376.8	7.4	850	0.73	1500	15000	3.7	850	0.36	1930	15000	

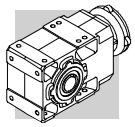

A 41 — 850 Nm

	i	n_1 = 900 min^{-1}					n_1 = 500 min^{-1}					
		n_2 min^{-1}	M_{n2} Nm	P_{n1} kW	R_{n1} N	R_{n2} N	n_2 min^{-1}	M_{n2} Nm	P_{n1} kW	R_{n1} N	R_{n2} N	
A 41 2_5.2	5.2	172	550	10.5	3140	6850	95	550	5.8	3500	8900	
A 41 2_7.1	7.1	126	550	7.7	3360	7870	70	550	4.3	3500	10100	
A 41 2_8.3	8.3	108	550	6.6	3440	8430	60	550	3.7	3500	10800	
A 41 2_9.2	9.2	98	550	6.0	3500	8800	54	550	3.3	3500	11300	
A 41 2_10.1	10.1	89	610	6.0	3500	8920	49	730	4.0	3500	10900	
A 41 2_11.7	11.7	77	550	4.7	3500	9760	43	550	2.6	3500	12400	
A 41 2_13.8	13.8	65	670	4.9	3500	9900	36	800	3.2	3500	12100	
A 41 2_16.1	16.1	56	700	4.4	3500	10500	31	830	2.9	3500	12800	
A 41 2_17.8	17.8	51	720	4.1	3500	10800	28.1	850	2.7	3500	13300	
A 41 2_22.7	22.7	40	780	3.4	3500	11700	22.0	850	2.1	3500	14800	
A 41 2_28.3	28.3	32	830	2.9	3500	12700	17.7	850	1.7	3500	15000	
A 41 2_35.9	35.9	25.1	850	2.4	3500	14000	13.9	850	1.3	3500	15000	
A 41 2_45.1	45.1	20.0	850	1.9	3500	15000	11.1	850	1.1	3500	15000	
A 41 2_48.3	48.3	18.6	850	1.8	3500	15000	10.4	850	0.98	3500	15000	
A 41 2_53.1	53.1	16.9	850	1.6	3500	15000	9.4	850	0.89	3500	15000	
A 41 2_58.8	58.8	15.3	850	1.4	3500	15000	8.5	850	0.81	3500	15000	319
A 41 2_64.2	64.2	14.0	850	1.3	3300	15000	7.8	850	0.74	3500	15000	
A 41 2_71.3	71.3	12.6	850	1.2	3500	15000	7.0	850	0.66	3500	15000	
A 41 2_79.2	79.2	11.4	800	1.0	3500	15000	6.3	800	0.56	3500	15000	
A 41 3_92.8	92.8	9.7	800	0.89	1080	15000	5.4	800	0.50	2110	15000	
A 41 3_115.9	115.9	7.8	850	0.76	1630	15000	4.3	850	0.42	2200	15000	
A 41 3_146.9	146.9	6.1	850	0.60	2020	15000	3.4	850	0.33	2200	15000	
A 41 3_184.4	184.4	4.9	850	0.48	2100	15000	2.7	850	0.27	2200	15000	
A 41 3_197.5	197.5	4.6	850	0.45	2120	15000	2.5	850	0.25	2200	15000	
A 41 3_217.4	217.4	4.1	850	0.40	2150	15000	2.3	850	0.22	2200	15000	
A 41 3_240.6	240.6	3.7	850	0.37	2170	15000	2.1	850	0.20	2200	15000	
A 41 3_262.5	262.5	3.4	850	0.34	2190	15000	1.9	850	0.19	2200	15000	
A 41 3_291.7	291.7	3.1	850	0.30	2200	15000	1.7	850	0.17	2200	15000	
A 41 3_324.2	324.2	2.8	850	0.27	2200	15000	1.5	850	0.15	2200	15000	
A 41 3_376.8	376.8	2.4	850	0.23	2200	15000	1.3	850	0.13	2200	15000	

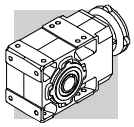

A 50 — 1500 Nm

	i	n_1 = 2800 min^{-1}					n_1 = 1400 min^{-1}					
		n_2 min^{-1}	M_{n2} Nm	P_{n1} kW	R_{n1} N	R_{n2} N	n_2 min^{-1}	M_{n2} Nm	P_{n1} kW	R_{n1} N	R_{n2} N	
A 50 2_7.7	7.7	362	550	22	2300	7920	181	700	14.1	2890	9960	
A 50 2_9.7	9.7	288	600	19.2	2330	8530	144	750	12.0	2950	10800	
A 50 2_13.1	13.1	214	600	14.3	2460	9600	107	750	8.9	3110	12100	
A 50 2_16.6	16.6	169	640	12.0	2490	10400	84	800	7.5	3150	13100	
A 50 2_20.9	20.9	134	640	9.5	2540	11400	67	800	6.0	3210	14400	
A 50 3_24.0	24.0	116	1150	15.4	1850	7020	58	1500	10.0	2100	8540	
A 50 3_26.4	26.4	106	1200	14.6	2100	7170	53	1500	9.1	2690	9100	
A 50 3_32.4	32.4	86	1290	12.8	1800	4630	43	1500	7.5	2760	10400	
A 50 3_35.6	35.6	79	1340	12.1	2080	7830	39	1500	6.8	3290	11000	
A 50 3_40.9	40.9	68	1415	11.1	1740	8130	34	1500	5.9	3220	11900	
A 50 3_45.0	45.0	62	1470	10.5	2030	8340	31	1500	5.4	3440	12600	
A 50 3_51.7	51.7	54	1500	9.4	1680	8970	27.1	1500	4.7	3400	13600	
A 50 3_56.8	56.8	49	1500	8.5	2150	9540	24.6	1500	4.3	3480	14400	
A 50 3_63.9	63.9	44	1500	7.6	1900	10300	21.9	1500	3.8	3450	15300	
A 50 3_70.2	70.2	40	1500	6.9	2350	10900	19.9	1500	3.4	3500	16100	
A 50 3_81.5	81.5	34	1500	5.9	2170	11900	17.2	1500	3.0	3500	17300	
A 50 3_89.5	89.5	31	1500	5.4	2590	12600	15.6	1500	2.7	3500	18200	
A 50 3_99.5	99.5	28.1	1500	4.9	2260	13400	14.1	1500	2.4	3500	19200	
A 50 3_109.4	109.4	25.6	1500	4.4	2680	14100	12.8	1500	2.2	3500	20000	
A 50 3_118.0	118.0	23.7	1500	4.1	2390	14700	11.9	1500	2.0	3500	20000	323
A 50 3_129.7	129.7	21.6	1500	3.7	2720	15400	10.8	1500	1.9	3500	20000	
A 50 3_140.6	140.6	19.9	1500	3.4	2440	16100	10.0	1500	1.7	3500	20000	
A 50 3_154.6	154.6	18.1	1500	3.1	2730	16900	9.1	1500	1.6	3500	20000	
A 50 3_173.4	173.4	16.2	1500	2.8	2480	17900	8.1	1500	1.4	3500	20000	
A 50 3_190.6	190.6	14.7	1500	2.5	2740	18800	7.3	1500	1.3	3500	20000	
A 50 4_211.0	211.0	13.3	1500	2.3	1930	20000	6.6	1500	1.2	2200	20000	
A 50 4_232.0	232.0	12.1	1500	2.1	1970	20000	6.0	1500	1.1	2200	20000	
A 50 4_260.9	260.9	10.7	1500	1.9	2010	20000	5.4	1500	0.95	2200	20000	
A 50 4_286.8	286.8	9.8	1500	1.7	2040	20000	4.9	1500	0.86	2200	20000	
A 50 4_332.6	332.6	8.4	1500	1.5	2080	20000	4.2	1500	0.74	2200	20000	
A 50 4_365.6	365.6	7.7	1500	1.4	2100	20000	3.8	1500	0.68	2200	20000	
A 50 4_406.4	406.4	6.9	1500	1.2	2130	20000	3.4	1500	0.61	2200	20000	
A 50 4_446.8	446.8	6.3	1500	1.1	2140	20000	3.1	1500	0.55	2200	20000	
A 50 4_481.6	481.6	5.8	1500	1.0	2160	20000	2.9	1500	0.51	2200	20000	
A 50 4_529.5	529.5	5.3	1500	0.93	2170	20000	2.6	1500	0.47	2200	20000	
A 50 4_574.2	574.2	4.9	1500	0.86	2190	20000	2.4	1500	0.43	2200	20000	
A 50 4_631.2	631.2	4.4	1500	0.78	2200	20000	2.2	1500	0.39	2200	20000	
A 50 4_707.9	707.9	4.0	1500	0.70	2200	20000	2.0	1500	0.35	2200	20000	
A 50 4_778.2	778.2	3.6	1500	0.63	2200	20000	1.8	1500	0.32	2200	20000	

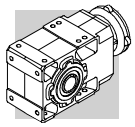

A 50 — 1500 Nm

	i	n_1 = 900 min^{-1}					n_1 = 500 min^{-1}					
		n_2 min^{-1}	M_{n2} Nm	P_{n1} kW	R_{n1} N	R_{n2} N	n_2 min^{-1}	M_{n2} Nm	P_{n1} kW	R_{n1} N	R_{n2} N	
A 50 2_7.7	7.7	116	770	10.0	3430	11700	65	900	6.5	3500	14300	
A 50 2_9.7	9.7	92	830	8.5	3490	12600	51	1000	5.7	3500	15300	
A 50 2_13.1	13.1	69	830	6.3	3500	14200	38	1000	4.2	3500	17300	
A 50 2_16.6	16.6	54	880	5.3	3500	15400	30	1000	3.4	3500	18900	
A 50 2_20.9	20.9	43	880	4.2	3500	16800	23.9	1000	2.7	3500	20000	
A 50 3_24.0	24.0	37	1500	6.5	3480	11300	20.8	1500	3.6	3500	15700	
A 50 3_26.4	26.4	34	1500	5.9	3500	12000	18.9	1500	3.3	3500	16500	
A 50 3_32.4	32.4	27.8	1500	4.8	3500	13400	15.4	1500	2.7	3500	18300	
A 50 3_35.6	35.6	25.3	1500	4.4	3500	14200	14.0	1500	2.4	3500	19200	
A 50 3_40.9	40.9	22.0	1500	3.8	3500	15300	12.2	1500	2.1	3500	20000	
A 50 3_45.0	45.0	20.0	1500	3.5	3500	16000	11.1	1500	1.9	3500	20000	
A 50 3_51.7	51.7	17.4	1500	3.0	3450	17200	9.7	1500	1.7	3500	20000	
A 50 3_56.8	56.8	15.8	1500	2.7	3500	18100	8.8	1500	1.5	3500	20000	
A 50 3_63.9	63.9	14.1	1500	2.4	3500	19200	7.8	1500	1.4	3500	20000	
A 50 3_70.2	70.2	12.8	1500	2.2	3500	20000	7.1	1500	1.2	3500	20000	
A 50 3_81.5	81.5	11.0	1500	1.9	3500	20000	6.1	1500	1.1	3500	20000	
A 50 3_89.5	89.5	10.1	1500	1.7	3500	20000	5.6	1500	0.96	3500	20000	
A 50 3_99.5	99.5	9.0	1500	1.6	3500	20000	5.0	1500	0.87	3500	20000	
A 50 3_109.4	109.4	8.2	1500	1.4	3500	20000	4.6	1500	0.79	3500	20000	
A 50 3_118.0	118.0	7.6	1500	1.3	3500	20000	4.2	1500	0.73	3500	20000	323
A 50 3_129.7	129.7	6.9	1500	1.2	3500	20000	3.9	1500	0.67	3500	20000	
A 50 3_140.6	140.6	6.4	1500	1.1	3500	20000	3.6	1500	0.61	3500	20000	
A 50 3_154.6	154.6	5.8	1500	1.0	3500	20000	3.2	1500	0.56	3500	20000	
A 50 3_173.4	173.4	5.2	1500	0.90	3500	20000	2.9	1500	0.50	3500	20000	
A 50 3_190.6	190.6	4.7	1500	0.82	3500	20000	2.6	1500	0.45	3500	20000	
A 50 4_211.0	211.0	4.3	1500	0.75	2200	20000	2.4	1500	0.42	2200	20000	
A 50 4_232.0	232.0	3.9	1500	0.68	2200	20000	2.2	1500	0.38	2200	20000	
A 50 4_260.9	260.9	3.4	1500	0.61	2200	20000	1.9	1500	0.34	2200	20000	
A 50 4_286.8	286.8	3.1	1500	0.55	2200	20000	1.7	1500	0.31	2200	20000	
A 50 4_332.6	332.6	2.7	1500	0.48	2200	20000	1.5	1500	0.27	2200	20000	
A 50 4_365.6	365.6	2.5	1500	0.43	2200	20000	1.4	1500	0.24	2200	20000	
A 50 4_406.4	406.4	2.2	1500	0.39	2200	20000	1.2	1500	0.22	2200	20000	
A 50 4_446.8	446.8	2.0	1500	0.36	2200	20000	1.1	1500	0.20	2200	20000	
A 50 4_481.6	481.6	1.9	1500	0.33	2200	20000	1.0	1500	0.18	2200	20000	
A 50 4_529.5	529.5	1.7	1500	0.30	2200	20000	0.94	1500	0.17	2200	20000	
A 50 4_574.2	574.2	1.6	1500	0.28	2200	20000	0.87	1500	0.15	2200	20000	
A 50 4_631.2	631.2	1.4	1500	0.25	2200	20000	0.79	1500	0.14	2200	20000	
A 50 4_707.9	707.9	1.3	1500	0.22	2200	20000	0.71	1500	0.12	2200	20000	
A 50 4_778.2	778.2	1.2	1500	0.20	2200	20000	0.64	1500	0.11	2200	20000	

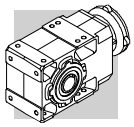

A 55 — 2000 Nm

	i	n_1 = 2800 min^{-1}					n_1 = 1400 min^{-1}					
		n_2 min^{-1}	M_{n2} Nm	P_{n1} kW	R_{n1} N	R_{n2} N	n_2 min^{-1}	M_{n2} Nm	P_{n1} kW	R_{n1} N	R_{n2} N	
A 55 2_4.9	4.9	571	760	48	1320	15100	286	900	28	2150	18700	
A 55 2_6.4	6.4	438	800	39	1950	16400	219	950	23	2860	20300	
A 55 2_8.5	8.5	329	800	30	2810	18000	165	950	17.5	3500	22200	
A 55 2_10.4	10.4	269	840	25	2900	19100	135	1000	15.1	3500	23600	
A 55 2_13.1	13.1	214	840	20	3230	20600	107	1000	11.9	3500	25500	
A 55 2_15.7	15.7	178	840	16.7	3440	21900	89	1000	9.9	3500	27000	
A 55 2_19.2	19.2	146	925	15.0	3160	23200	73	1100	8.9	3500	28600	
A 55 3_23.8	23.8	118	1600	22	2050	21000	59	1950	13.2	2640	26000	
A 55 3_29.9	29.9	94	1700	18.3	2110	22500	47	2000	10.8	2770	28200	
A 55 3_40.3	40.3	69	1850	14.8	2150	24800	35	2000	8.0	2930	30000	
A 55 3_51.0	51.0	55	2000	12.6	2170	26500	27.5	2000	6.3	3050	30000	
A 55 3_64.3	64.3	44	2000	10.0	2230	29000	21.8	2000	5.0	3110	30000	
A 55 3_79.5	79.5	35	2000	8.1	1040	30000	17.6	2000	4.1	2820	30000	
A 55 3_101.4	101.4	27.6	2000	6.4	1340	30000	13.8	2000	3.2	3130	30000	
A 55 3_123.9	123.9	22.6	2000	5.2	1450	30000	11.3	2000	2.6	3230	30000	327
A 55 3_132.7	132.7	21.1	2000	4.9	1450	30000	10.6	2000	2.4	3240	30000	
A 55 3_146.8	146.8	19.1	2000	4.4	1610	30000	9.5	2000	2.2	3290	30000	
A 55 3_160.4	160.4	17.5	2000	4.0	1660	30000	8.7	2000	2.0	3300	30000	
A 55 3_175.0	175.0	16.0	2000	3.7	1660	30000	8.0	2000	1.8	3300	30000	
A 55 3_194.2	194.2	14.4	2000	3.3	1710	30000	7.2	2000	1.7	3310	30000	
A 55 4_208.1	208.1	13.5	1600	2.5	1890	30000	6.7	1950	1.5	2200	30000	
A 55 4_262.6	262.6	10.7	1650	2.1	1980	30000	5.3	2000	1.3	2200	30000	
A 55 4_324.7	324.7	8.6	1750	1.8	2030	30000	4.3	2000	1.0	2200	30000	
A 55 4_414.0	414.0	6.8	1850	1.5	2080	30000	3.4	2000	0.80	2200	30000	
A 55 4_505.9	505.9	5.5	1900	1.2	2120	30000	2.8	2000	0.65	2200	30000	
A 55 4_542.0	542.0	5.2	1900	1.2	2140	30000	2.6	2000	0.61	2200	30000	
A 55 4_599.5	599.5	4.7	1950	1.1	2150	30000	2.3	2000	0.55	2200	30000	
A 55 4_655.1	655.1	4.3	1950	1.0	2180	30000	2.1	2000	0.50	2200	30000	
A 55 4_714.7	714.7	3.9	1950	0.90	2200	30000	2.0	2000	0.46	2200	30000	
A 55 4_793.0	793.0	3.5	2000	0.83	2200	30000	1.8	2000	0.42	2200	30000	

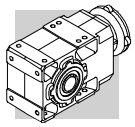

A 55 2000 Nm

	i	n_1 = 900 min^{-1}					n_1 = 500 min^{-1}					
		n_2 min^{-1}	M_{n2} Nm	P_{n1} kW	R_{n1} N	R_{n2} N	n_2 min^{-1}	M_{n2} Nm	P_{n1} kW	R_{n1} N	R_{n2} N	
A 55 2_4.9	4.9	184	1000	20	2850	21400	102	1160	13.1	3500	25600	
A 55 2_6.4	6.4	141	1060	16.6	3500	23200	78	1230	10.7	3500	27700	
A 55 2_8.5	8.5	106	1060	12.6	3500	25400	59	1230	8.1	3500	30000	
A 55 2_10.4	10.4	87	1120	10.8	3500	27000	48	1290	6.9	3500	30000	
A 55 2_13.1	13.1	69	1120	8.6	3500	29100	38	1290	5.5	3500	30000	
A 55 2_15.7	15.7	57	1120	7.2	3500	30000	32	1290	4.6	3500	30000	
A 55 2_19.2	19.2	47	1230	6.4	3500	30000	26.0	1420	4.1	3500	30000	
A 55 3_23.8	23.8	38	2000	8.7	3280	30000	21.0	2000	4.8	3500	30000	
A 55 3_29.9	29.9	30	2000	6.9	3450	30000	16.7	2000	3.8	3500	30000	
A 55 3_40.3	40.3	22.3	2000	5.1	3500	30000	12.4	2000	2.9	3500	30000	
A 55 3_51.0	51.0	17.6	2000	4.1	3500	30000	9.8	2000	2.3	3500	30000	
A 55 3_64.3	64.3	14.0	2000	3.2	3500	30000	7.8	2000	1.8	3500	30000	
A 55 3_79.5	79.5	11.3	2000	2.6	3500	30000	6.3	2000	1.4	3500	30000	
A 55 3_101.4	101.4	8.9	2000	2.0	3500	30000	4.9	2000	1.1	3500	30000	
A 55 3_123.9	123.9	7.3	2000	1.7	3500	30000	4.0	2000	0.93	3500	30000	327
A 55 3_132.7	132.7	6.8	2000	1.6	3500	30000	3.8	2000	0.87	3500	30000	
A 55 3_146.8	146.8	6.1	2000	1.4	3500	30000	3.4	2000	0.78	3500	30000	
A 55 3_160.4	160.4	5.6	2000	1.3	3500	30000	3.1	2000	0.72	3500	30000	
A 55 3_175.0	175.0	5.1	2000	1.2	3500	30000	2.9	2000	0.66	3500	30000	
A 55 3_194.2	194.2	4.6	2000	1.1	3500	30000	2.6	2000	0.59	3500	30000	
A 55 4_208.1	208.1	4.3	2000	1.0	2200	30000	2.4	2000	0.57	2200	30000	
A 55 4_262.6	262.6	3.4	2000	0.81	2200	30000	1.9	2000	0.45	2200	30000	
A 55 4_324.7	324.7	2.8	2000	0.65	2200	30000	1.5	2000	0.36	2200	30000	
A 55 4_414.0	414.0	2.2	2000	0.51	2200	30000	1.2	2000	0.28	2200	30000	
A 55 4_505.9	505.9	1.8	2000	0.42	2200	30000	1.0	2000	0.23	2200	30000	
A 55 4_542.0	542.0	1.7	2000	0.39	2200	30000	0.92	2000	0.22	2200	30000	
A 55 4_599.5	599.5	1.5	2000	0.35	2200	30000	0.83	2000	0.20	2200	30000	
A 55 4_655.1	655.1	1.4	2000	0.32	2200	30000	0.76	2000	0.18	2200	30000	
A 55 4_714.7	714.7	1.3	2000	0.30	2200	30000	0.70	2000	0.16	2200	30000	
A 55 4_793.0	793.0	1.1	2000	0.27	2200	30000	0.63	2000	0.15	2200	30000	

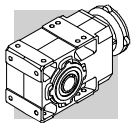

A 60 — 2800 Nm

	i	n_1 = 2800 min^{-1}					n_1 = 1400 min^{-1}					
		n_2 min^{-1}	M_{n2} Nm	P_{n1} kW	R_{n1} N	R_{n2} N	n_2 min^{-1}	M_{n2} Nm	P_{n1} kW	R_{n1} N	R_{n2} N	
A 60 2_7.9	7.9	356	950	38	2770	22500	178	1200	24	3400	27700	
A 60 2_10.3	10.3	271	950	29	2970	24600	136	1200	18.1	3740	30000	
A 60 2_12.7	12.7	220	1000	25	3020	26200	110	1250	15.3	3810	30000	
A 60 2_16.7	16.7	167	1050	19.6	3080	28600	84	1300	12.1	3910	30000	
A 60 2_20.6	20.6	136	1100	16.7	3100	30000	68	1400	10.6	3890	30000	
A 60 3_25.7	25.7	109	2760	35	2380	26900	54	2800	17.5	3800	30000	
A 60 3_27.9	27.9	101	2800	32	2780	27700	50	2800	16.2	3930	30000	
A 60 3_31.7	31.7	88	2800	29	2790	29000	44	2800	14.2	3940	30000	
A 60 3_34.3	34.3	82	2800	26	2920	30000	41	2800	13.2	4060	30000	
A 60 3_41.7	41.7	67	2800	22	2940	30000	34	2800	10.8	4090	30000	
A 60 3_45.2	45.2	62	2800	20	3060	30000	31	2800	10.0	4200	30000	
A 60 3_51.3	51.3	55	2800	17.6	3030	30000	27.3	2800	8.8	4180	30000	
A 60 3_55.6	55.6	50	2800	16.2	3140	30000	25.2	2800	8.1	4280	30000	
A 60 3_65.0	65.0	43	2800	13.9	3110	30000	21.5	2800	6.9	4260	30000	
A 60 3_70.4	70.4	40	2800	12.8	3210	30000	19.9	2800	6.4	4360	30000	
A 60 3_79.7	79.7	35	2800	11.3	3160	30000	17.6	2800	5.7	4310	30000	
A 60 3_86.4	86.4	32	2800	10.4	3260	30000	16.2	2800	5.2	4410	30000	
A 60 3_99.5	99.5	28.1	2800	9.1	3210	30000	14.1	2800	4.5	4360	30000	
A 60 3_107.8	107.8	26.0	2800	8.4	3300	30000	13.0	2800	4.2	4450	30000	
A 60 3_123.0	123.0	22.8	2800	7.3	3250	30000	11.4	2800	3.7	4400	30000	331
A 60 3_133.3	133.3	21.0	2800	6.8	3340	30000	10.5	2800	3.4	4490	30000	
A 60 3_144.0	144.0	19.4	2800	6.3	3280	30000	9.7	2800	3.1	4420	30000	
A 60 3_156.0	156.0	17.9	2800	5.8	3360	30000	9.0	2800	2.9	4510	30000	
A 60 3_171.5	171.5	16.3	2800	5.3	3290	30000	8.2	2800	2.6	4430	30000	
A 60 3_185.8	185.8	15.1	2800	4.9	3370	30000	7.5	2800	2.4	4520	30000	
A 60 4_208.7	208.7	13.4	2800	4.4	2720	30000	6.7	2800	2.2	3500	30000	
A 60 4_226.1	226.1	12.4	2800	4.1	2770	30000	6.2	2800	2.0	3500	30000	
A 60 4_264.3	264.3	10.6	2800	3.5	2860	30000	5.3	2800	1.7	3500	30000	
A 60 4_286.3	286.3	9.8	2800	3.2	2900	30000	4.9	2800	1.6	3500	30000	
A 60 4_324.2	324.2	8.6	2800	2.8	2960	30000	4.3	2800	1.4	3500	30000	
A 60 4_351.2	351.2	8.0	2800	2.6	2990	30000	4.0	2800	1.3	3500	30000	
A 60 4_404.7	404.7	6.9	2800	2.3	3050	30000	3.5	2800	1.1	3500	30000	
A 60 4_438.4	438.4	6.4	2800	2.1	3070	30000	3.2	2800	1.1	3500	30000	
A 60 4_500.3	500.3	5.6	2800	1.8	3110	30000	2.8	2800	0.92	3500	30000	
A 60 4_542.0	542.0	5.2	2800	1.7	3140	30000	2.6	2800	0.85	3500	30000	
A 60 4_585.8	585.8	4.8	2800	1.6	3150	30000	2.4	2800	0.79	3500	30000	
A 60 4_634.6	634.6	4.4	2800	1.5	3170	30000	2.2	2800	0.73	3500	30000	
A 60 4_697.3	697.3	4.0	2800	1.3	3190	30000	2.0	2800	0.66	3500	30000	
A 60 4_755.4	755.4	3.7	2800	1.2	3210	30000	1.9	2800	0.61	3500	30000	

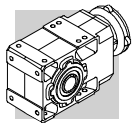

A 60 — 2800 Nm

	i	n_1 = 900 min^{-1}					n_1 = 500 min^{-1}					
		n_2 min^{-1}	M_{n2} Nm	P_{n1} kW	R_{n1} N	R_{n2} N	n_2 min^{-1}	M_{n2} Nm	P_{n1} kW	R_{n1} N	R_{n2} N	
A 60 2_7.9	7.9	114	1300	16.6	4190	30000	64	1550	11.0	4700	30000	
A 60 2_10.3	10.3	87	1300	12.6	4470	30000	48	1550	8.4	4700	30000	
A 60 2_12.7	12.7	71	1400	11.0	4490	30000	39	1700	7.5	4700	30000	
A 60 2_16.7	16.7	54	1450	8.7	4610	30000	29.9	1700	5.7	4700	30000	
A 60 2_20.6	20.6	44	1550	7.5	4600	30000	24.3	1800	4.9	4700	30000	
A 60 3_25.7	25.7	35	2800	11.3	4680	30000	19.4	2800	6.3	4700	30000	
A 60 3_27.9	27.9	32	2800	10.4	4700	30000	18.0	2800	5.8	4700	30000	
A 60 3_31.7	31.7	28.4	2800	9.2	4700	30000	15.8	2800	5.1	4700	30000	
A 60 3_34.3	34.3	26.2	2800	8.5	4700	30000	14.6	2800	4.7	4700	30000	
A 60 3_41.7	41.7	21.6	2800	7.0	4700	30000	12.0	2800	3.9	4700	30000	
A 60 3_45.2	45.2	19.9	2800	6.4	4700	30000	11.1	2800	3.6	4700	30000	
A 60 3_51.3	51.3	17.5	2800	5.6	4700	30000	9.7	2800	3.1	4700	30000	
A 60 3_55.6	55.6	16.2	2800	5.2	4700	30000	9.0	2800	2.9	4700	30000	
A 60 3_65.0	65.0	13.8	2800	4.5	4700	30000	7.7	2800	2.5	4700	30000	
A 60 3_70.4	70.4	12.8	2800	4.1	4700	30000	7.1	2800	2.3	4700	30000	
A 60 3_79.7	79.7	11.3	2800	3.6	4700	30000	6.3	2800	2.0	4700	30000	
A 60 3_86.4	86.4	10.4	2800	3.4	4700	30000	5.8	2800	1.9	4700	30000	
A 60 3_99.5	99.5	9.0	2800	2.9	4700	30000	5.0	2800	1.6	4700	30000	
A 60 3_107.8	107.8	8.3	2800	2.7	4700	30000	4.6	2800	1.5	4700	30000	
A 60 3_123.0	123.0	7.3	2800	2.4	4700	30000	4.1	2800	1.3	4700	30000	331
A 60 3_133.3	133.3	6.8	2800	2.2	4700	30000	3.8	2800	1.2	4700	30000	
A 60 3_144.0	144.0	6.2	2800	2.0	4700	30000	3.5	2800	1.1	4700	30000	
A 60 3_156.0	156.0	5.8	2800	1.9	4700	30000	3.2	2800	1.0	4700	30000	
A 60 3_171.5	171.5	5.2	2800	1.7	4700	30000	2.9	2800	0.94	4700	30000	
A 60 3_185.8	185.8	4.8	2800	1.6	4700	30000	2.7	2800	0.87	4700	30000	
A 60 4_208.7	208.7	4.3	2800	1.4	3500	30000	2.4	2800	0.79	3500	30000	
A 60 4_226.1	226.1	4.0	2800	1.3	3500	30000	2.2	2800	0.73	3500	30000	
A 60 4_264.3	264.3	3.4	2800	1.1	3500	30000	1.9	2800	0.62	3500	30000	
A 60 4_286.3	286.3	3.1	2800	1.0	3500	30000	1.7	2800	0.58	3500	30000	
A 60 4_324.2	324.2	2.8	2800	0.91	3500	30000	1.5	2800	0.51	3500	30000	
A 60 4_351.2	351.2	2.6	2800	0.84	3500	30000	1.4	2800	0.47	3500	30000	
A 60 4_404.7	404.7	2.2	2800	0.73	3500	30000	1.2	2800	0.41	3500	30000	
A 60 4_438.4	438.4	2.1	2800	0.68	3500	30000	1.1	2800	0.38	3500	30000	
A 60 4_500.3	500.3	1.8	2800	0.59	3500	30000	1.0	2800	0.33	3500	30000	
A 60 4_542.0	542.0	1.7	2800	0.55	3500	30000	0.92	2800	0.30	3500	30000	
A 60 4_585.8	585.8	1.5	2800	0.51	3500	30000	0.85	2800	0.28	3500	30000	
A 60 4_634.6	634.6	1.4	2800	0.47	3500	30000	0.79	2800	0.26	3500	30000	
A 60 4_697.3	697.3	1.3	2800	0.43	3500	30000	0.72	2800	0.24	3500	30000	
A 60 4_755.4	755.4	1.2	2800	0.39	3500	30000	0.66	2800	0.22	3500	30000	

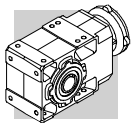

A 70 — 5000 Nm

	i	n_1 = 2800 min^{-1}					n_1 = 1400 min^{-1}					
		n_2	M_{n2}	P_{n1}	R_{n1}	R_{n2}	n_2	M_{n2}	P_{n1}	R_{n1}	R_{n2}	
		min^{-1}	Nm	kW	N	N	min^{-1}	Nm	kW	N	N	
A 70 3_9.4	9.4	297	2300	79	1900	25900	148	2800	48	2550	31900	335
A 70 3_10.2	10.2	274	2400	76	2480	26400	137	3200	50	1480	31900	
A 70 3_12.1	12.1	232	2400	64	2420	28000	116	3200	43	1400	33900	
A 70 3_13.1	13.1	214	2600	64	2420	28400	107	3350	41	2100	34600	
A 70 3_15.4	15.4	182	2700	56	2100	29900	91	3350	35	2430	36700	
A 70 3_16.7	16.7	168	2850	55	2500	30400	84	3600	35	2590	37200	
A 70 3_19.7	19.7	142	2900	48	2030	32100	71	3700	30	1790	39300	
A 70 3_21.3	21.3	131	3000	45	2750	32900	66	4000	30	1830	39800	
A 70 3_23.5	23.5	119	3500	48	4930	32900	60	4300	30	6250	40500	
A 70 3_27.8	27.8	101	3450	40	4960	35100	50	4200	24	6300	43300	
A 70 3_30.1	30.1	93	3700	40	4970	35600	47	4550	24	6300	43900	
A 70 3_35.4	35.4	79	3650	33	5040	37900	40	4500	21	6370	46600	
A 70 3_38.4	38.4	73	3950	33	5040	38400	36	4850	20	6380	47300	
A 70 3_45.2	45.2	62	3900	28	5050	40800	31	4800	17.1	6400	50000	
A 70 3_49.0	49.0	57	4250	28	5050	41300	28.6	5000	16.4	6450	50000	
A 70 3_53.2	53.2	53	4100	25	5030	42900	26.3	5000	15.1	6380	50000	
A 70 3_57.7	57.7	49	4450	25	5030	43400	24.3	5000	14.0	6490	50000	
A 70 3_66.9	66.9	42	4350	21	5050	46000	20.9	5000	12.0	6480	50000	
A 70 3_72.5	72.5	39	4750	21	5040	46500	19.3	5000	11.1	6580	50000	
A 70 3_79.3	79.3	35	4600	18.7	5020	48400	17.6	5000	10.2	6520	50000	
A 70 3_85.9	85.9	33	4950	18.6	5030	49100	16.3	5000	9.4	6620	50000	
A 70 3_96.2	96.2	29.1	4850	16.2	5000	50000	14.6	5000	8.4	6570	50000	
A 70 3_104.2	104.2	26.9	5000	15.5	5060	50000	13.4	5000	7.7	6660	50000	
A 70 3_120.6	120.6	23.2	5000	13.4	5010	50000	11.6	5000	6.7	6610	50000	
A 70 3_130.7	130.7	21.4	5000	12.3	5100	50000	10.7	5000	6.2	6690	50000	
A 70 3_141.9	141.9	19.7	5000	11.4	5040	50000	9.9	5000	5.7	6640	50000	
A 70 3_153.7	153.7	18.2	3300	6.9	5410	50000	9.1	4050	4.2	6920	50000	
A 70 4_169.8	169.8	16.5	5000	9.7	1130	50000	8.2	5000	4.9	2520	50000	
A 70 4_183.9	183.9	15.2	5000	9.0	1450	50000	7.6	5000	4.5	2670	50000	
A 70 4_220.3	220.3	12.7	5000	7.5	1560	50000	6.4	5000	3.7	2710	50000	
A 70 4_238.6	238.6	11.7	5000	6.9	1860	50000	5.9	5000	3.5	2770	50000	
A 70 4_292.0	292.0	9.6	5000	5.6	1900	50000	4.8	5000	2.8	2790	50000	
A 70 4_316.4	316.4	8.9	5000	5.2	2110	50000	4.4	5000	2.6	2850	50000	
A 70 4_369.4	369.4	7.6	5000	4.5	2110	50000	3.8	5000	2.2	2840	50000	
A 70 4_400.2	400.2	7.0	5000	4.1	2160	50000	3.5	5000	2.1	2900	50000	
A 70 4_475.8	475.8	5.9	5000	3.5	2150	50000	2.9	5000	1.7	2890	50000	
A 70 4_515.4	515.4	5.4	5000	3.2	2200	50000	2.7	5000	1.6	2940	50000	
A 70 4_595.0	595.0	4.7	5000	2.8	2190	50000	2.4	5000	1.4	2920	50000	
A 70 4_644.6	644.6	4.3	5000	2.6	2230	50000	2.2	5000	1.3	2970	50000	
A 70 4_705.1	705.1	4.0	5000	2.3	2200	50000	2.0	5000	1.2	2940	50000	
A 70 4_763.9	763.9	3.7	5000	2.2	2250	50000	1.8	5000	1.1	2990	50000	
A 70 4_855.3	855.3	3.3	5000	1.9	2220	50000	1.6	5000	0.96	2960	50000	
A 70 4_926.5	926.5	3.0	5000	1.8	2270	50000	1.5	5000	0.89	3000	50000	
A 70 4_1072	1072	2.6	5000	1.5	2240	50000	1.3	5000	0.77	2970	50000	
A 70 4_1161	1161	2.4	5000	1.4	2280	50000	1.2	5000	0.71	3020	50000	
A 70 4_1242	1242	2.3	5000	1.3	2250	50000	1.1	5000	0.66	2980	50000	
A 70 4_1346	1346	2.1	5000	1.2	2290	50000	1.0	5000	0.61	3030	50000	
A 70 4_1583	1583	1.8	5000	1.0	2260	50000	0.88	5000	0.52	2990	50000	
A 70 4_1715	1715	1.6	5000	0.96	2300	50000	0.82	5000	0.48	3040	50000	

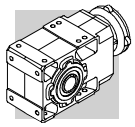

A 70 — 5000 Nm

	i	n_1 = 900 min^{-1}					n_1 = 500 min^{-1}					
		n_2	M_{n2}	P_{n1}	R_{n1}	R_{n2}	n_2	M_{n2}	P_{n1}	R_{n1}	R_{n2}	
		min^{-1}	Nm	kW	N	N	min^{-1}	Nm	kW	N	N	
A 70 3_9.4	9.4	95	3000	33	4290	36900	53	3000	18.3	7000	45400	
A 70 3_10.2	10.2	88	3250	33	4290	37400	49	3250	18.3	7000	46100	
A 70 3_12.1	12.1	75	3650	31	1620	38700	41	3650	17.4	6470	47900	
A 70 3_13.1	13.1	69	3950	31	1650	39200	38	3950	17.4	6500	48600	
A 70 3_15.4	15.4	58	3700	25	3510	42200	32	3700	13.8	7000	50000	
A 70 3_16.7	16.7	54	4000	25	3560	42800	30	4000	13.8	7000	50000	
A 70 3_19.7	19.7	46	3700	19.5	4910	46100	25.4	3700	10.8	7000	50000	
A 70 3_21.3	21.3	42	4000	19.4	4950	46800	23.5	4000	10.8	7000	50000	
A 70 3_23.5	23.5	38	4900	21.6	7000	46300	21.3	5000	12.2	7000	50000	
A 70 3_27.8	27.8	32	4800	17.9	7000	49400	18.0	5000	10.4	7000	50000	
A 70 3_30.1	30.1	29.9	5000	17.2	7000	50000	16.6	5000	9.6	7000	50000	
A 70 3_35.4	35.4	25.4	5000	14.6	7000	50000	14.1	5000	8.1	7000	50000	
A 70 3_38.4	38.4	23.4	5000	13.5	7000	50000	13.0	5000	7.5	7000	50000	
A 70 3_45.2	45.2	19.9	5000	11.4	7000	50000	11.1	5000	6.4	7000	50000	
A 70 3_49.0	49.0	18.4	5000	10.6	7000	50000	10.2	5000	5.9	7000	50000	
A 70 3_53.2	53.2	16.9	5000	9.7	7000	50000	9.4	5000	5.4	7000	50000	
A 70 3_57.7	57.7	15.6	5000	9.0	7000	50000	8.7	5000	5.0	7000	50000	
A 70 3_66.9	66.9	13.4	5000	7.7	7000	50000	7.5	5000	4.3	7000	50000	
A 70 3_72.5	72.5	12.4	5000	7.1	7000	50000	6.9	5000	4.0	7000	50000	
A 70 3_79.3	79.3	11.3	5000	6.5	7000	50000	6.3	5000	3.6	7000	50000	
A 70 3_85.9	85.9	10.5	5000	6.0	7000	50000	5.8	5000	3.3	7000	50000	
A 70 3_96.2	96.2	9.4	5000	5.4	7000	50000	5.2	5000	3.0	7000	50000	
A 70 3_104.2	104.2	8.6	5000	5.0	7000	50000	4.8	5000	2.8	7000	50000	
A 70 3_120.6	120.6	7.5	5000	4.3	7000	50000	4.1	5000	2.4	7000	50000	
A 70 3_130.7	130.7	6.9	5000	4.0	7000	50000	3.8	5000	2.2	7000	50000	335
A 70 3_141.9	141.9	6.3	5000	3.7	7000	50000	3.5	5000	2.0	7000	50000	
A 70 3_153.7	153.7	5.9	4600	3.1	7000	50000	3.3	5000	1.9	7000	50000	
A 70 4_169.8	169.8	5.3	5000	3.1	3170	50000	2.9	5000	1.7	3500	50000	
A 70 4_183.9	183.9	4.9	5000	2.9	3240	50000	2.7	5000	1.6	3500	50000	
A 70 4_220.3	220.3	4.1	5000	2.4	3270	50000	2.3	5000	1.3	3500	50000	
A 70 4_238.6	238.6	3.8	5000	2.2	3340	50000	2.1	5000	1.2	3500	50000	
A 70 4_292.0	292.0	3.1	5000	1.8	3350	50000	1.7	5000	1.0	3500	50000	
A 70 4_316.4	316.4	2.8	5000	1.7	3410	50000	1.6	5000	0.93	3500	50000	
A 70 4_369.4	369.4	2.4	5000	1.4	3410	50000	1.4	5000	0.80	3500	50000	
A 70 4_400.2	400.2	2.2	5000	1.3	3460	50000	1.2	5000	0.74	3500	50000	
A 70 4_475.8	475.8	1.9	5000	1.1	3450	50000	1.1	5000	0.62	3500	50000	
A 70 4_515.4	515.4	1.7	5000	1.0	3500	50000	0.97	5000	0.57	3500	50000	
A 70 4_595.0	595.0	1.5	5000	0.89	3480	50000	0.84	5000	0.49	3500	50000	
A 70 4_644.6	644.6	1.4	5000	0.82	3500	50000	0.78	5000	0.46	3500	50000	
A 70 4_705.1	705.1	1.3	5000	0.75	3500	50000	0.71	5000	0.42	3500	50000	
A 70 4_763.9	763.9	1.2	5000	0.69	3500	50000	0.65	5000	0.39	3500	50000	
A 70 4_855.3	855.3	1.1	5000	0.62	3500	50000	0.58	5000	0.34	3500	50000	
A 70 4_926.5	926.5	0.97	5000	0.57	3500	50000	0.54	5000	0.32	3500	50000	
A 70 4_1072	1072	0.84	5000	0.49	3500	50000	0.47	5000	0.27	3500	50000	
A 70 4_1161	1161	0.77	5000	0.46	3500	50000	0.43	5000	0.25	3500	50000	
A 70 4_1242	1242	0.72	5000	0.43	3500	50000	0.40	5000	0.24	3500	50000	
A 70 4_1346	1346	0.67	5000	0.39	3500	50000	0.37	5000	0.22	3500	50000	
A 70 4_1583	1583	0.57	5000	0.33	3500	50000	0.32	5000	0.19	3500	50000	
A 70 4_1715	1715	0.52	5000	0.31	3500	50000	0.29	5000	0.17	3500	50000	

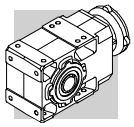

A 80 — 8000 Nm

	i	n_1 = 2800 min^{-1}					n_1 = 1400 min^{-1}					
		n_2 min^{-1}	M_{n2} Nm	P_{n1} kW	R_{n1} N	R_{n2} N	n_2 min^{-1}	M_{n2} Nm	P_{n1} kW	R_{n1} N	R_{n2} N	
A 80 3_9.8	9.8	285	3100	102	—	26300	142	3900	64	—	32100	338
A 80 3_10.7	10.7	263	3450	104	—	26300	131	4300	65	—	32300	
A 80 3_12.3	12.3	228	3450	91	—	27700	114	4300	56	—	34000	
A 80 3_13.3	13.3	211	3450	84	1150	28700	105	4300	52	1150	35200	
A 80 3_15.5	15.5	181	3300	69	1560	30600	91	4100	43	1730	37600	
A 80 3_16.7	16.7	167	3600	69	1440	30900	84	4500	43	1460	37900	
A 80 3_19.3	19.3	145	3500	58	1870	32800	72	4400	37	1880	40200	
A 80 3_20.9	20.9	134	3840	59	1670	33100	67	4800	37	1740	40600	
A 80 3_22.6	22.6	124	5050	72	4500	31200	62	6250	45	5830	38400	
A 80 3_24.5	24.5	114	5500	72	4470	31300	57	6750	44	5840	38600	
A 80 3_28.2	28.2	99	5350	61	4700	33500	50	6600	38	5960	41200	
A 80 3_30.6	30.6	92	5250	55	4840	34900	46	6450	34	6140	43000	
A 80 3_35.5	35.5	79	5700	52	4700	36000	39	7000	32	6000	44300	
A 80 3_38.5	38.5	73	6150	51	4720	36200	36	7600	32	6000	44500	
A 80 3_44.5	44.5	63	6050	44	4790	38600	31	7450	27	6070	47500	
A 80 3_48.2	48.2	58	6550	44	4790	38800	29.1	8000	27	6090	47900	
A 80 3_55.2	55.2	51	6400	37	4710	41300	25.4	7900	23	6050	50800	
A 80 3_59.8	59.8	47	6950	37	4690	41500	23.4	8000	22	6170	52300	
A 80 3_66.8	66.8	42	6800	33	4670	43700	21.0	8000	19.3	6150	54600	
A 80 3_72.4	72.4	39	7350	33	4680	44000	19.3	8000	17.8	6280	56500	
A 80 3_82.3	82.3	34	7200	28	4570	46600	17.0	8000	15.7	6230	59300	
A 80 3_89.2	89.2	31	7800	28	4570	46900	15.7	8000	14.5	6350	61400	
A 80 3_96.0	96.0	29.2	7500	25	4410	48900	14.6	8000	13.4	6260	63000	
A 80 3_104.0	104.0	26.9	8000	25	4500	49500	13.5	8000	12.4	6380	65000	
A 80 3_116.0	116.0	24.1	7950	22	4230	51700	12.1	8000	11.1	6300	65000	
A 80 3_125.6	125.6	22.3	8000	21	4630	53400	11.1	8000	10.3	6420	65000	
A 80 3_144.7	144.7	19.3	8000	17.8	4320	56400	9.7	8000	8.9	6350	65000	
A 80 3_156.8	156.8	17.9	8000	16.4	4750	58300	8.9	8000	8.2	6460	65000	
A 80 4_171.3	171.3	16.3	8000	15.4	—	65000	8.2	8000	7.7	1230	65000	
A 80 4_214.7	214.7	13.0	8000	12.3	—	65000	6.5	8000	6.1	1400	65000	
A 80 4_232.6	232.6	12.0	8000	11.3	—	65000	6.0	8000	5.7	1810	65000	
A 80 4_277.3	277.3	10.1	8000	9.5	540	65000	5.0	8000	4.8	1930	65000	
A 80 4_300.4	300.4	9.3	8000	8.8	900	65000	4.7	8000	4.4	2290	65000	
A 80 4_354.0	354.0	7.9	8000	7.4	800	65000	4.0	8000	3.7	2190	65000	
A 80 4_383.5	383.5	7.3	8000	6.9	1140	65000	3.7	8000	3.4	2530	65000	
A 80 4_442.1	442.1	6.3	8000	6.0	1040	65000	3.2	8000	3.0	2430	65000	
A 80 4_478.9	478.9	5.8	8000	5.5	1370	65000	2.9	8000	2.8	2670	65000	
A 80 4_560.5	560.5	5.0	8000	4.7	1240	65000	2.5	8000	2.4	2630	65000	
A 80 4_607.2	607.2	4.6	8000	4.3	1550	65000	2.3	8000	2.2	2720	65000	
A 80 4_703.5	703.5	4.0	8000	3.7	1440	65000	2.0	8000	1.9	2690	65000	
A 80 4_762.1	762.1	3.7	8000	3.5	1730	65000	1.8	8000	1.7	2760	65000	
A 80 4_829.5	829.5	3.4	8000	3.2	1530	65000	1.7	8000	1.6	2720	65000	
A 80 4_898.7	898.7	3.1	8000	2.9	1820	65000	1.6	8000	1.5	2780	65000	
A 80 4_1001	1001	2.8	8000	2.6	1620	65000	1.4	8000	1.3	2740	65000	
A 80 4_1085	1085	2.6	8000	2.4	1900	65000	1.3	8000	1.2	2800	65000	
A 80 4_1237	1237	2.3	8000	2.1	1660	65000	1.1	8000	1.1	2750	65000	
A 80 4_1340	1340	2.1	8000	2.0	1940	65000	1.0	8000	0.98	2810	65000	
A 80 4_1438	1438	1.9	8000	1.8	1730	65000	0.97	8000	0.92	2770	65000	
A 80 4_1558	1558	1.8	8000	1.7	2000	65000	0.90	8000	0.85	2830	65000	

(—) Contact our technical service department advising radial load data (rotation direction, orientation, position)

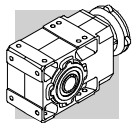

A 80 — 8000 Nm

	i	n_1 = 900 min^{-1}					n_1 = 500 min^{-1}					
		n_2 min^{-1}	M_{n2} Nm	P_{n1} kW	R_{n1} N	R_{n2} N	n_2 min^{-1}	M_{n2} Nm	P_{n1} kW	R_{n1} N	R_{n2} N	
A 80 3_9.8	9.8	92	4450	47	—	36700	51	5300	31	—	43800	
A 80 3_10.7	10.7	84	4900	48	—	36900	47	5850	32	—	44000	
A 80 3_12.3	12.3	73	4900	41	—	38900	41	5850	27	—	46400	
A 80 3_13.3	13.3	68	4900	38	1360	40200	38	5850	25	1600	47900	
A 80 3_15.5	15.5	58	4650	31	2130	43000	32	5550	21	2530	51300	
A 80 3_16.7	16.7	54	5100	32	1840	43400	29.9	6100	21	2120	51700	
A 80 3_19.3	19.3	47	5000	27	2260	46000	25.9	6000	17.9	2530	54800	
A 80 3_20.9	20.9	43	5470	27	2030	46400	23.9	6500	17.9	2530	55400	
A 80 3_22.6	22.6	40	7100	33	6810	43900	22.1	8000	20.4	7000	53400	
A 80 3_24.5	24.5	37	7700	33	6800	44100	20.4	8000	18.8	7000	55300	
A 80 3_28.2	28.2	32	7550	28	6940	47000	17.7	8000	16.3	7000	58400	
A 80 3_30.6	30.6	29.4	7400	25	7000	49000	16.4	8000	15.1	7000	60400	
A 80 3_35.5	35.5	25.3	8000	23	6980	50600	14.1	8000	13.0	7000	63900	
A 80 3_38.5	38.5	23.4	8000	22	7000	52400	13.0	8000	12.0	7000	65000	
A 80 3_44.5	44.5	20.2	8000	18.6	7000	55400	11.2	8000	10.3	7000	65000	
A 80 3_48.2	48.2	18.7	8000	17.2	7000	57300	10.4	8000	9.6	7000	65000	
A 80 3_55.2	55.2	16.3	8000	15.0	7000	60300	9.1	8000	8.3	7000	65000	
A 80 3_59.8	59.8	15.1	8000	13.9	7000	62300	8.4	8000	7.7	7000	65000	
A 80 3_66.8	66.8	13.5	8000	12.4	7000	65000	7.5	8000	6.9	7000	65000	
A 80 3_72.4	72.4	12.4	8000	11.4	7000	65000	6.9	8000	6.4	7000	65000	
A 80 3_82.3	82.3	10.9	8000	10.1	7000	65000	6.1	8000	5.6	7000	65000	
A 80 3_89.2	89.2	10.1	8000	9.3	7000	65000	5.6	8000	5.2	7000	65000	
A 80 3_96.0	96.0	9.4	8000	8.6	7000	65000	5.2	8000	4.8	7000	65000	
A 80 3_104.0	104.0	8.7	8000	8.0	7000	65000	4.8	8000	4.4	7000	65000	
A 80 3_116.0	116.0	7.8	8000	7.1	7000	65000	4.3	8000	4.0	7000	65000	338
A 80 3_125.6	125.6	7.2	8000	6.6	7000	65000	4.0	8000	3.7	7000	65000	
A 80 3_144.7	144.7	6.2	8000	5.7	7000	65000	3.5	8000	3.2	7000	65000	
A 80 3_156.8	156.8	5.7	8000	5.3	7000	65000	3.2	8000	2.9	7000	65000	
A 80 4_171.3	171.3	5.3	8000	4.9	2300	65000	2.9	8000	2.7	3500	65000	
A 80 4_214.7	214.7	4.2	8000	3.9	2470	65000	2.3	8000	2.2	3500	65000	
A 80 4_232.6	232.6	3.9	8000	3.6	2870	65000	2.1	8000	2.0	3500	65000	
A 80 4_277.3	277.3	3.2	8000	3.1	3000	65000	1.8	8000	1.7	3500	65000	
A 80 4_300.4	300.4	3.0	8000	2.8	3120	65000	1.7	8000	1.6	3500	65000	
A 80 4_354.0	354.0	2.5	8000	2.4	3100	65000	1.4	8000	1.3	3500	65000	
A 80 4_383.5	383.5	2.3	8000	2.2	3180	65000	1.3	8000	1.2	3500	65000	
A 80 4_442.1	442.1	2.0	8000	1.9	3160	65000	1.1	8000	1.1	3500	65000	
A 80 4_478.9	478.9	1.9	8000	1.8	3230	65000	1.0	8000	0.98	3500	65000	
A 80 4_560.5	560.5	1.6	8000	1.5	3210	65000	0.89	8000	0.84	3500	65000	
A 80 4_607.2	607.2	1.5	8000	1.4	3280	65000	0.82	8000	0.78	3500	65000	
A 80 4_703.5	703.5	1.3	8000	1.2	3260	65000	0.71	8000	0.67	3500	65000	
A 80 4_762.1	762.1	1.2	8000	1.1	3320	65000	0.66	8000	0.62	3500	65000	
A 80 4_829.5	829.5	1.1	8000	1.0	3280	65000	0.60	8000	0.57	3500	65000	
A 80 4_898.7	898.7	1.0	8000	0.94	3340	65000	0.56	8000	0.52	3500	65000	
A 80 4_1001	1001	0.90	8000	0.85	3300	65000	0.50	8000	0.47	3500	65000	
A 80 4_1085	1085	0.83	8000	0.78	3360	65000	0.46	8000	0.43	3500	65000	
A 80 4_1237	1237	0.73	8000	0.68	3310	65000	0.40	8000	0.38	3500	65000	
A 80 4_1340	1340	0.67	8000	0.63	3370	65000	0.37	8000	0.35	3500	65000	
A 80 4_1438	1438	0.63	8000	0.59	3330	65000	0.35	8000	0.33	3500	65000	
A 80 4_1558	1558	0.58	8000	0.54	3390	65000	0.32	8000	0.30	3500	65000	

(—) Contact our technical service department advising radial load data (rotation direction, orientation, position)

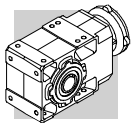

A 90 — 14000 Nm

	i	n_1 = 2800 min^{-1}					n_1 = 1400 min^{-1}					
		n_2 min^{-1}	M_{n2} Nm	P_{n1} kW	R_{n1} N	R_{n2} N	n_2 min^{-1}	M_{n2} Nm	P_{n1} kW	R_{n1} N	R_{n2} N	
A 90 3_9.7	9.7	289	7800	260	2440	27600	145	9050	151	5520	35000	
A 90 3_10.5	10.5	267	8350	257	2620	27700	134	9800	151	5530	34900	
A 90 3_12.6	12.6	221	8500	217	2700	29800	111	10450	133	4790	36700	
A 90 3_13.7	13.7	204	8050	189	4670	31800	102	11150	131	5060	36900	
A 90 3_15.6	15.6	180	8900	184	3240	32000	90	10950	113	5410	39400	
A 90 3_16.9	16.9	166	9650	184	3230	31900	83	11850	113	5440	39300	
A 90 3_19.4	19.4	144	9400	156	3160	34300	72	11550	96	5350	42300	
A 90 3_21.0	21.0	133	10150	156	3210	34300	67	12400	95	5510	42400	
A 90 3_22.3	22.3	126	9850	143	9660	35700	63	12150	88	12200	43900	
A 90 3_24.1	24.1	116	10700	143	9660	35500	58	13150	88	12200	43800	
A 90 3_29.1	29.1	96	10550	117	9800	38900	48	13000	72	12400	47900	
A 90 3_31.5	31.5	89	11450	117	9800	38800	44	14000	72	12400	47900	
A 90 3_35.8	35.8	78	11150	100	9910	41600	39	13750	62	12500	51100	
A 90 3_38.8	38.8	72	12100	100	9900	41500	36	14000	58	12700	52700	
A 90 3_44.6	44.6	63	11800	85	9920	44600	31	14000	51	12700	56000	
A 90 3_48.3	48.3	58	12800	85	9920	44500	29.0	14000	47	12800	58000	
A 90 3_55.0	55.0	51	12550	73	9960	47500	25.4	14000	41	12800	61400	
A 90 3_59.6	59.6	47	13550	73	9970	47500	23.5	14000	38	13000	63500	
A 90 3_68.8	68.8	41	13350	63	9960	50900	20.4	14000	33	13000	67400	
A 90 3_74.5	74.5	38	14000	61	10000	51700	18.8	14000	30	13100	69700	
A 90 3_80.4	80.4	35	13900	56	9920	53500	17.4	14000	28	13000	71900	
A 90 3_87.1	87.1	32	14000	52	10100	55500	16.1	14000	26	13200	74300	
A 90 3_98.6	98.6	28.4	14000	46	9990	58500	14.2	14000	23	13100	75000	
A 90 3_106.8	106.8	26.2	14000	42	10100	60600	13.1	14000	21	13300	75000	
A 90 3_116.9	116.9	24.0	14000	39	10100	63000	12.0	14000	19.3	13200	75000	
A 90 3_126.6	126.6	22.1	10650	27	10600	71400	11.1	13150	16.7	13400	75000	341
A 90 3_139.4	139.4	20.1	10350	24	10600	74500	10.0	12750	14.7	13400	75000	
A 90 3_151.0	151.0	18.5	11200	24	10600	75000	9.3	13800	14.7	13400	75000	
A 90 4_166.1	166.1	16.9	14000	28	—	75000	8.4	14000	13.9	—	75000	
A 90 4_180.0	180.0	15.6	14000	26	—	75000	7.8	14000	12.8	—	75000	
A 90 4_209.0	209.0	13.4	14000	22	—	75000	6.7	14000	11.0	—	75000	
A 90 4_226.4	226.4	12.4	14000	20	—	75000	6.2	14000	10.2	—	75000	
A 90 4_281.4	281.4	9.9	14000	16.4	—	75000	5.0	14000	8.2	—	75000	
A 90 4_304.9	304.9	9.2	14000	15.1	—	75000	4.6	14000	7.6	—	75000	
A 90 4_355.8	355.8	7.9	14000	13.0	—	75000	3.9	14000	6.5	—	75000	
A 90 4_385.4	385.4	7.3	14000	12.0	—	75000	3.6	14000	6.0	680	75000	
A 90 4_449.2	449.2	6.2	14000	10.3	—	75000	3.1	14000	5.1	—	75000	
A 90 4_486.6	486.6	5.8	14000	9.5	—	75000	2.9	14000	4.7	950	75000	
A 90 4_555.3	555.3	5.0	14000	8.3	—	75000	2.5	14000	4.2	740	75000	
A 90 4_601.6	601.6	4.7	14000	7.7	—	75000	2.3	14000	3.8	1200	75000	
A 90 4_707.9	707.9	4.0	14000	6.5	—	75000	2.0	14000	3.3	1050	75000	
A 90 4_766.9	766.9	3.7	14000	6.0	—	75000	1.8	14000	3.0	1490	75000	
A 90 4_865.1	865.1	3.2	14000	5.3	—	75000	1.6	14000	2.7	1170	75000	
A 90 4_937.2	937.2	3.0	14000	4.9	—	75000	1.5	14000	2.5	1590	75000	
A 90 4_1025	1025	2.7	14000	4.5	—	75000	1.4	14000	2.2	1330	75000	
A 90 4_1111	1111	2.5	14000	4.2	—	75000	1.3	14000	2.1	1740	75000	
A 90 4_1222	1222	2.3	14000	3.8	—	75000	1.1	14000	1.9	1380	75000	
A 90 4_1324	1324	2.1	14000	3.5	—	75000	1.1	14000	1.7	1790	75000	
A 90 4_1507	1507	1.9	14000	3.1	—	75000	0.93	14000	1.5	1440	75000	
A 90 4_1632	1632	1.7	14000	2.8	—	75000	0.86	14000	1.4	1840	75000	

(—) Contact our technical service department advising radial load data (rotation direction, orientation, position)

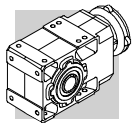

A 90 — 14000 Nm

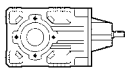

	i	n_1 = 900 min^{-1}					n_1 = 500 min^{-1}					
		n_2 min^{-1}	M_{n2} Nm	P_{n1} kW	R_{n1} N	R_{n2} N	n_2 min^{-1}	M_{n2} Nm	P_{n1} kW	R_{n1} N	R_{n2} N	
A 90 3_9.7	9.7	93	9050	97	9800	42300	52	9050	54	15000	53700	
A 90 3_10.5	10.5	86	9800	97	9810	42500	48	9800	54	15000	54200	
A 90 3_12.6	12.6	71	11800	97	6720	42100	40	11800	54	13500	54500	
A 90 3_13.7	13.7	66	12750	96	6770	42100	37	12800	54	13500	54600	
A 90 3_15.6	15.6	58	11550	77	8730	46700	32	11550	43	15000	59900	
A 90 3_16.9	16.9	53	12500	77	8750	46800	29.6	12500	43	15000	60300	
A 90 3_19.4	19.4	46	11550	62	9630	51400	25.8	11550	34	15000	65400	
A 90 3_21.0	21.0	43	12400	61	9790	51700	23.8	12400	34	15000	66100	
A 90 3_22.3	22.3	40	13850	64	14200	50200	22.5	14000	36	15000	64700	
A 90 3_24.1	24.1	37	14000	60	14400	51900	20.7	14000	33	15000	66900	
A 90 3_29.1	29.1	31	14000	50	14600	56200	17.2	14000	28	15000	72100	
A 90 3_31.5	31.5	28.6	14000	46	14800	58400	15.9	14000	26	15000	74700	
A 90 3_35.8	35.8	25.1	14000	40	14900	61700	14.0	14000	23	15000	75000	
A 90 3_38.8	38.8	23.2	14000	37	15000	63900	12.9	14000	21	15000	75000	
A 90 3_44.6	44.6	20.2	14000	33	15000	67700	11.2	14000	18.1	15000	75000	
A 90 3_48.3	48.3	18.6	14000	30	15000	70000	10.4	14000	16.7	15000	75000	
A 90 3_55.0	55.0	16.4	14000	26	15000	73800	9.1	14000	14.6	15000	75000	
A 90 3_59.6	59.6	15.1	14000	24	15000	75000	8.4	14000	13.5	15000	75000	
A 90 3_68.8	68.8	13.1	14000	21	15000	75000	7.3	14000	11.7	15000	75000	
A 90 3_74.5	74.5	12.1	14000	19.5	15000	75000	6.7	14000	10.8	15000	75000	
A 90 3_80.4	80.4	11.2	14000	18.0	15000	75000	6.2	14000	10.0	15000	75000	
A 90 3_87.1	87.1	10.3	14000	16.7	15000	75000	5.7	14000	9.3	15000	75000	
A 90 3_98.6	98.6	9.1	14000	14.7	15000	75000	5.1	14000	8.2	15000	75000	
A 90 3_106.8	106.8	8.4	14000	13.6	15000	75000	4.7	14000	7.5	15000	75000	
A 90 3_116.9	116.9	7.7	14000	12.4	15000	75000	4.3	14000	6.9	15000	75000	
A 90 3_126.6	126.6	7.1	14000	11.4	15000	75000	3.9	14000	6.4	15000	75000	341
A 90 3_139.4	139.4	6.5	14000	10.4	15000	75000	3.6	14000	5.8	15000	75000	
A 90 3_151.0	151.0	6.0	14000	9.6	15000	75000	3.3	14000	5.3	15000	75000	
A 90 4_166.1	166.1	5.4	14000	8.9	—	75000	3.0	14000	5.0	700	75000	
A 90 4_180.0	180.0	5.0	14000	8.2	—	75000	2.8	14000	4.6	1400	75000	
A 90 4_209.0	209.0	4.3	14000	7.1	—	75000	2.4	14000	3.9	1500	75000	
A 90 4_226.4	226.4	4.0	14000	6.5	500	75000	2.2	14000	3.6	2100	75000	
A 90 4_281.4	281.4	3.2	14000	5.3	690	75000	1.8	14000	2.9	2300	75000	
A 90 4_304.9	304.9	3.0	14000	4.9	1230	75000	1.6	14000	2.7	2900	75000	
A 90 4_355.8	355.8	2.5	14000	4.2	1240	75000	1.4	14000	2.3	2900	75000	
A 90 4_385.4	385.4	2.3	14000	3.8	1750	75000	1.3	14000	2.1	3400	75000	
A 90 4_449.2	449.2	2.0	14000	3.3	1540	75000	1.1	14000	1.8	3200	75000	
A 90 4_486.6	486.6	1.8	14000	3.0	2020	75000	1.0	14000	1.7	3500	75000	
A 90 4_555.3	555.3	1.6	14000	2.7	1810	75000	0.90	14000	1.5	3500	75000	
A 90 4_601.6	601.6	1.5	14000	2.5	2270	75000	0.83	14000	1.4	3500	75000	
A 90 4_707.9	707.9	1.3	14000	2.1	2120	75000	0.71	14000	1.2	3500	75000	
A 90 4_766.9	766.9	1.2	14000	1.9	2560	75000	0.65	14000	1.1	3500	75000	
A 90 4_865.1	865.1	1.0	14000	1.7	2240	75000	0.58	14000	0.95	3500	75000	
A 90 4_937.2	937.2	0.96	14000	1.6	2660	75000	0.53	14000	0.88	3500	75000	
A 90 4_1025	1025	0.88	14000	1.4	2400	75000	0.49	14000	0.80	3500	75000	
A 90 4_1111	1111	0.81	14000	1.3	2810	75000	0.45	14000	0.74	3500	75000	
A 90 4_1222	1222	0.74	14000	1.2	2450	75000	0.41	14000	0.67	3500	75000	
A 90 4_1324	1324	0.68	14000	1.1	2860	75000	0.38	14000	0.62	3500	75000	
A 90 4_1507	1507	0.60	14000	0.98	2410	75000	0.33	14000	0.55	3500	75000	
A 90 4_1632	1632	0.55	14000	0.91	2910	75000	0.31	14000	0.50	3500	75000	

(—) Contact our technical service department advising radial load data (rotation direction, orientation, position)

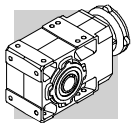

40 MOTOR AVAILABILITY

Please be aware that motor-gearbox combinations resulting from the following charts are purely based on geometrical compatibility.

When selecting a gearmotor, refer to procedure specified at paragraph 12 and observe particularly the condition $S \geq f_S$.

(C 40)

		IEC_ BN BE BX BXN (IM B5)																							
		BN	BE	BX	BXN	BN	BE	BX	BXN	BN	BE	BX	BXN	BN	BE	BX	BXN	BN	BE	BX	BXN	BN	BE	BX	BXN
P_{n1}(#) [kW]	2p	0.37	—	—	—	0.75	—	—	—	1.5	1.1	—	—	2.2	2.2	—	—	4	3	—	—	4	4	—	—
	4p	0.25	0.18	0.25	0.18	0.55	0.37	0.37	0.37	1.1	0.75	0.75	0.75	1.85	1.5	1.5	1.5	3	3	3	3	4	4	4	4
	6p	0.12	—	—	—	0.37	—	—	—	0.75	—	—	—	1.1	0.75	—	—	1.85	1.5	—	—	2.2	2.2	—	—

		P63	P71	P80	P90	P100	P112
A 05 2	i =	5.5_91.6	5.5_51.3	5.5_51.3			
A 10 2		5.5_91.6	5.5_91.6	5.5_65.9	5.5_65.9	5.5_65.9	5.5_65.9
A 20 2		7.3_92.3 ⛔(10.3)	7.3_92.3 ⛔(10.3)	5.4_79.9	5.4_79.9	5.4_79.9	5.4_79.9
A 20 3		109.2_380.9	109.2_380.9	109.2_380.9	109.2_380.9	109.2_380.9	109.2_380.9
A 30 2		9.3_97.5 ⛔(10.5 ; 13.6_16.3)	9.3_97.5 ⛔(10.5 ; 13.6_16.3)	5.4_97.5	5.4_97.5	5.4_97.5	5.4_97.5
A 30 3		109.1_400.8	109.1_400.8	109.1_400.8	109.1_400.8	109.1_400.8	109.1_400.8
A 35 2		9.3_95.6 ⛔(13.1_20.4)	9.3_95.6 ⛔(13.1_20.4)	5.4_95.6	5.4_95.6	5.4_95.6	5.4_95.6
A 35 3		105.5_393.2	105.5_393.2	105.5_393.2	105.5_393.2	105.5_393.2	105.5_393.2
A 41 2		11.7_79.2 ⛔(13.8_17.8)	11.7_79.2 ⛔(13.8_17.8)	5.2_79.2	5.2_79.2	5.2_79.2	5.2_79.2
A 41 3		92.8_376.8	92.8_376.8	92.8_376.8	92.8_376.8	92.8_376.8	92.8_376.8
A 50 2		20.9	20.9	7.7_20.9	7.7_20.9	7.7_20.9	7.7_20.9
A 50 3		51.7_190.6	51.7_190.6	24.0_190.6	24.0_190.6	24.0_190.6	24.0_190.6
A 50 4		211.0_778.2	211.0_778.2	211.0_778.2	211.0_778.2	211.0_778.2	211.0_778.2
A 55 2				13.1_19.2	13.1_19.2	13.1_19.2	13.1_19.2
A 55 3		64.3_194.2	64.3_194.2	23.8_194.2	23.8_194.2	23.8_194.2	23.8_194.2
A 55 4		208.1_793.0	208.1_793.0	208.1_793.0	208.1_793.0	208.1_793.0	208.1_793.0
A 60 2				10.3_20.6	10.3_20.6	10.3_20.6	10.3_20.6
A 60 3		65.0_185.8	65.0_185.8	25.7_185.8	25.7_185.8	25.7_185.8	25.7_185.8
A 60 4		208.7_755.4	208.7_755.4	208.7_755.4	208.7_755.4	208.7_755.4	208.7_755.4
A 70 3				66.9_153.7	66.9_153.7	66.9_153.7	66.9_153.7
A 70 4		292.0_1715	292.0_1715	169.8_1715	169.8_1715	169.8_1715	169.8_1715
A 80 3				82.3_156.8	82.3_156.8	82.3_156.8	82.3_156.8
A 80 4		354.0_1558	354.0_1558	171.3_1558	171.3_1558	171.3_1558	171.3_1558
A 90 3				98.6_151.0	98.6_151.0	98.6_151.0	98.6_151.0
A 90 4		449.2_1632	449.2_1632	166.1_1632	166.1_1632	166.1_1632	166.1_1632

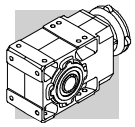

		IEC_ BN BE BX BXN (IM B5)													
		BN	**BE**	**BX**	**BXN**	**BN**	**BE**	**BX**	**BN**	**BE**	**BX**	**BN**	**BX**	**BX**	**BX**
P_{n1}(#) [kW]	**2p**	9.2	9.2	—	—	18.5	18.5	—	22	—	—	30	—	—	—
	4p	9.2	9.2	7.5	7.5	15	15	15	22	22	22	30	30	45	55
	6p	5.5	4	—	—	11	7.5	—	15	—	—	18.5	—	—	—
		P132				**P160**			**P180**			**P200**		**P225**	**P250**
A 05 2															
A 10 2															
A 20 2															
A 20 3															
A 30 2															
A 30 3															
A 35 2		5.4_11.8													
A 35 3															
A 41 2		5.2_45.1													
A 41 3															
A 50 2		7.7_20.9				7.7_20.9			7.7_20.9						
A 50 3		24.0_109.4				24.0_109.4			24.0_109.4						
A 50 4	**i =**														
A 55 2		4.9_19.2				4.9_19.2			4.9_19.2						
A 55 3		23.8_123.9				23.8_123.9			23.8_123.9						
A 55 4															
A 60 2		7.9_20.6				7.9_20.6			7.9_20.6						
A 60 3		25.7_133.3				25.7_133.3			25.7_133.3						
A 60 4															
A 70 3		15.4_153.7 ⛔ (23.5_30.1)				9.4_153.7			9.4_153.7			9.4_38.4 ⛔ (19.7_21.3)			
A 70 4		169.8_644.6													
A 80 3		19.3_156.8 ⛔ (22.6_38.5)				12.3_156.8 ⛔ (22.6_24.5)			9.8_156.8			9.8_104.0		9.8_104.0	
A 80 4		171.3_762.1													
A 90 3		55.0_151.0				19.4_151.0 ⛔ (22.3_38.8)			9.7_151.0			9.7_126.6		9.7_126.6	9.7_126.6
A 90 4		166.1_937.2				166.1_937.2			166.1_937.2						

(#) $\mathbf{P_{n1}}$ = maximum installable power on input P_

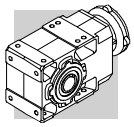

(C 41)

		M	ME	MX	MXN		
		M05 - ME05 - MXN05	M1 - ME1 - MXN10*	ME2 - MX2 - MXN20*	ME3 - MX4	ME4 - MX4	ME5 - MX5
A 05 2		5.5_91.6	5.5_51.3	5.5_65.9			
A 10 2		5.5_91.6	5.5_51.3	5.5_65.9	5.5_65.9		
A 20 2		7.3_92.3 ⛀ (10.3)	7.3_63.1 ⛀ (10.3)	5.4_79.9	5.4_79.9		
A 20 3		109.2_380.9	109.2_380.9	109.2_380.9	109.2_380.9		
A 30 2			9.3_76.5 ⛀ (10.5 ; 13.6_16.3)	5.4_97.5	5.4_97.5		
A 30 3		109.1_400.8	109.1_400.8	109.1_400.8	109.1_400.8		
A 35 2			9.3_95.6 ⛀ (13.1_20.4)	5.4_95.6	5.4_95.6	5.4_11.8	
A 35 3		105.5_393.2	105.5_393.2	105.5_393.2	105.5_393.2		
A 41 2			11.7_79.2 ⛀ (13.8_17.8)	5.2_79.2	5.2_79.2	5.2_45.1	
A 41 3		92.8_376.8	92.8_376.8	92.8_376.8	92.8_376.8		
A 50 2			20.9	7.7_20.9	7.7_20.9	7.7_20.9	7.7_20.9
A 50 3			51.7_190.6	24.0_190.6	24.0_190.6	24.0_109.4	24.0_109.4
A 50 4	i =		211.0_778.2	211.0_778.2	211.0_778.2		
A 55 2				13.1_19.2	13.1_19.2	4.9_19.2	4.9_19.2
A 55 3			64.3_194.2	23.8_194.2	23.8_194.2	23.8_123.9	23.8_123.9
A 55 4			208.1_793.0	208.1_793.0	208.1_793.0		
A 60 2				10.3_20.6	10.3_20.6	7.9_20.6	7.9_20.6
A 60 3				25.7_185.8	25.7_185.8	25.7_133.3	25.7_133.3
A 60 4			208.7_755.4	208.7_755.4	208.7_755.4		
A 70 3				66.9_153.7	66.9_153.7	15.4_153.7 ⛀ (23.5_30.1)	15.4_153.7 ⛀ (23.5_30.1)
A 70 4			292.0_1715	169.8_1715	169.8_1715	169.8_644.6	
A 80 3					82.3_156.8	19.3_156.8 ⛀ (22.6_38.5)	19.3_156.8 ⛀ (22.6_38.5)
A 80 4			354.0_1558	171.3_1558	171.3_1558	171.3_762.1	
A 90 3					98.6_151.0	55.0_151.0	55.0_151.0
A 90 4			449.2_1632	166.1_1632	166.1_1632	166.1_937.2	

* Gearbox A 05 2 is not available in combination with MXN 10 and MXN 20 but only with MXN 05

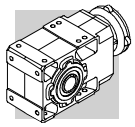

Motor adapters matching the most popular brands of servomotors are available for units size A05… A60. Dimensions of servomotor inputs are provided within the drawing section for each frame size. The code **SK** applies for inputs featuring a conventional keyway, while through the specification of the **SC** code the input shaft will feature a clamping device instead.

(C 42)

		SERVO INPUT					
		SK40A	SK60A	SK60B	SK80A	SK80B	SK80C
		SC40A	SC60A	SC60B	SC80A	SC80B	SC80C
A 05 2	i =	5.5_91.6	5.5_91.6	5.5_51.3	5.5_51.3		
A 10 2			5.5_91.6	5.5_51.3	5.5_51.3		5.5_65.9
A 20 2			7.3_92.3 ⛀ (10.3)	7.3_63.1 ⛀ (10.3)	7.3_63.1 ⛀ (10.3)		5.4_79.9
A 20 3			109.2_380.9	109.2_380.9	109.2_380.9		109.2_380.9
A 30 2			9.3_97.5 ⛀ (10.5 ; 13.6_16.3)	9.3_76.5 ⛀ (10.5 ; 13.6_16.3)	9.3_76.5 ⛀ (10.5 ; 13.6_16.3)		5.4_97.5
A 30 3			109.1_400.8	109.1_400.8	109.1_400.8		109.1_400.8
A 35 2			9.3_95.6 ⛀ (13.1_20.4)	9.3_95.6 ⛀ (13.1_20.4)	9.3_95.6 ⛀ (13.1_20.4)		5.4_95.6
A 35 3			105.5_393.2	105.5_393.2	105.5_393.2		105.5_393.2
A 41 2						11.7_79.2 ⛀ (13.8_17.8)	5.2_79.2
A 41 3			92.8_376.8	92.8_376.8	92.8_376.8		92.8_376.8
A 50 2						20.9	7.7_20.9
A 50 3						51.7_190.6	24.0_190.6
A 50 4							211.0_778.2
A 55 2							13.1_19.2
A 55 3						64.3_194.2	23.8_194.2
A 55 4							208.1_793.0
A 60 2							10.3_20.6
A 60 3							25.7_185.8
A 60 4						208.7_755.4	208.7_755.4

(C 43)

		SERVO INPUT								
		SK95A	SK95B	SK95C	SK110A	SK110B	SK130A	SK130B	SK180A	SK180B
		SC95A	SC95B	SC95C	SC110A	SC110B	SC130A	SC130B	SC180A	SC180B
A 10 2	i =	5.5_51.3	5.5_65.9	5.5_65.9	5.5_65.9	5.5_65.9				
A 20 2		7.3_63.1 ⛀ (10.3)	5.4_79.9	5.4_79.9	5.4_79.9	5.4_79.9				
A 20 3		109.2_380.9	109.2_380.9	109.2_380.9	109.2_380.9	109.2_380.9				
A 30 2		9.3_76.5 ⛀ (10.5 ; 13.6_16.3)	5.4_97.5	5.4_97.5	5.4_97.5	5.4_97.5	5.4_97.5			
A 30 3		109.1_400.8	109.1_400.8	109.1_400.8	109.1_400.8	109.1_400.8				
A 35 2		9.3_95.6 ⛀ (13.1_20.4)	5.4_95.6	5.4_95.6	5.4_95.6	5.4_95.6	5.4_95.6			
A 35 3		105.5_393.2	105.5_393.2	105.5_393.2	105.5_393.2	105.5_393.2				
A 41 2		11.7_79.2 ⛀ (13.8_17.8)	5.2_79.2	5.2_79.2	5.2_79.2	5.2_79.2	5.2_79.2	5.2_45.1	5.2_45.1	5.2_45.1
A 41 3		92.8_376.8	92.8_376.8	92.8_376.8	92.8_376.8	92.8_376.8				
A 50 2		20.9	7.7_20.9	7.7_20.9	7.7_20.9	7.7_20.9	7.7_20.9	7.7_20.9	7.7_20.9	7.7_20.9
A 50 3		51.7_190.6	24.0_190.6	24.0_190.6	24.0_190.6	24.0_190.6	24.0_190.6	24.0_109.4	24.0_109.4	24.0_109.4
A 50 4		211.0_778.2	211.0_778.2	211.0_778.2	211.0_778.2	211.0_778.2	211.0_778.2			
A 55 2			13.1_19.2	13.1_19.2	13.1_19.2	13.1_19.2	13.1_19.2	4.9_19.2	4.9_19.2	4.9_19.2
A 55 3		64.3_194.2	23.8_194.2	23.8_194.2	23.8_194.2	23.8_194.2	23.8_194.2	23.8_123.9	23.8_123.9	23.8_123.9
A 55 4		208.1_793.0	208.1_793.0	208.1_793.0	208.1_793.0	208.1_793.0	208.1_793.0			
A 60 2			10.3_20.6	10.3_20.6	10.3_20.6	10.3_20.6	10.3_20.6	7.9_20.6	7.9_20.6	7.9_20.6
A 60 3		65.0_185.8	25.7_185.8	25.7_185.8	25.7_185.8	25.7_185.8	25.7_185.8	25.7_133.3	25.7_133.3	25.7_133.3
A 60 4		208.7_755.4	208.7_755.4	208.7_755.4	208.7_755.4	208.7_755.4	208.7_755.4			

41 MOMENT OF INERTIA

The following charts indicate moment of inertia values J_r [kgm²] referred to the gear unit high speed shaft. A key to the symbols used follows:



Values under this icon refer to compact gear units, without motor. To obtain the overall moment of inertia for the gearmotor just add the value of the inertia for the specific compact motor, given in the relevant rating chart.

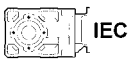

Values under this symbol refer to gearboxes with IEC motor adaptor (IEC size...).

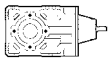

This symbol refers to gearbox values.



Values under this symbol refer to gear unit with servomotor input adapter.

A 05

	i	**J** (•10⁻⁴) [kgm²]				
			IEC			
			63	**71**	**80**	
A 05 2_5.5	5.5	0.72	0.99	1.0	1.4	—
A 05 2_6.3	6.3	0.56	0.83	0.86	1.2	—
A 05 2_7.2	7.2	0.48	0.74	0.77	1.1	—
A 05 2_8.5	8.5	0.36	0.63	0.65	1.0	—
A 05 2_9.6	9.6	0.29	0.55	0.58	0.92	—
A 05 2_10.6	10.6	0.50	0.77	0.80	1.1	—
A 05 2_12.3	12.3	0.18	0.45	0.48	0.82	—
A 05 2_13.9	13.9	0.35	0.62	0.65	0.99	—
A 05 2_16.4	16.4	0.27	0.54	0.57	0.91	—
A 05 2_18.6	18.6	0.22	0.49	0.51	0.86	—
A 05 2_21.4	21.4	0.16	0.43	0.46	0.80	—
A 05 2_23.8	23.8	0.14	0.41	0.43	0.78	—
A 05 2_25.5	25.5	0.13	0.39	0.42	0.76	—
A 05 2_28.6	28.6	0.11	0.38	0.40	0.75	—
A 05 2_32.2	32.2	0.09	0.36	0.39	0.73	—
A 05 2_35.1	35.1	0.08	0.35	0.37	0.72	—
A 05 2_40.9	40.9	0.07	0.33	0.36	0.70	—
A 05 2_45.4	45.4	0.05	0.32	0.35	0.69	—
A 05 2_51.3	51.3	0.04	0.31	0.34	0.68	—
A 05 2_58.6	58.6	0.04	0.31	—	—	—
A 05 2_65.9	65.9	0.03	0.30	—	—	—
A 05 2_76.4	76.4	0.02	0.29	—	—	—
A 05 2_91.6	91.6	0.02	0.28	—	—	—

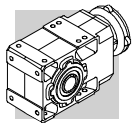

A 05

	i	J (•10-4) [kgm2]					
		SERVO					
		40A		60A		60B 80A	
		SK	SC	SK	SC	SK	SC
A 05 2_5.5	5.5	0.89	1.1	0.99	1.3	1.0	1.4
A 05 2_6.3	6.3	0.73	0.89	0.83	1.1	0.86	1.3
A 05 2_7.2	7.2	0.65	0.81	0.74	1.0	0.77	1.2
A 05 2_8.5	8.5	0.53	0.69	0.63	0.89	0.65	1.1
A 05 2_9.6	9.6	0.46	0.62	0.55	0.81	0.58	1.0
A 05 2_10.6	10.6	0.67	0.83	0.77	1.0	0.80	1.2
A 05 2_12.3	12.3	0.35	0.51	0.45	0.71	0.48	0.92
A 05 2_13.9	13.9	0.52	0.68	0.62	0.88	0.65	1.1
A 05 2_16.4	16.4	0.44	0.60	0.54	0.80	0.57	1.0
A 05 2_18.6	18.6	0.39	0.55	0.49	0.75	0.51	0.95
A 05 2_21.4	21.4	0.33	0.49	0.43	0.69	0.46	0.90
A 05 2_23.8	23.8	0.31	0.47	0.41	0.67	0.43	0.87
A 05 2_25.5	25.5	0.30	0.46	0.39	0.65	0.42	0.86
A 05 2_28.6	28.6	0.28	0.44	0.38	0.64	0.40	0.84
A 05 2_32.2	32.2	0.26	0.42	0.36	0.62	0.39	0.83
A 05 2_35.1	35.1	0.25	0.41	0.35	0.61	0.37	0.81
A 05 2_40.9	40.9	0.24	0.40	0.33	0.59	0.36	0.80
A 05 2_45.4	45.4	0.22	0.38	0.32	0.58	0.35	0.79
A 05 2_51.3	51.3	0.21	0.37	0.31	0.57	0.34	0.78
A 05 2_58.6	58.6	0.21	0.37	0.31	0.57	—	—
A 05 2_65.9	65.9	0.20	0.36	0.30	0.56	—	—
A 05 2_76.4	76.4	0.19	0.35	0.29	0.55	—	—
A 05 2_91.6	91.6	0.19	0.35	0.28	0.54	—	—

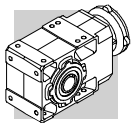

A 10

	i	J (•10-4) [kgm2]							
			IEC 						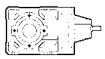
			63	71	80	90	100	112	
A 10 2_5.5	5.5	1.0	2.5	2.5	3.9	3.8	5.1	5.1	1.8
A 10 2_6.3	6.3	0.80	2.3	2.3	3.7	3.6	4.9	4.9	1.6
A 10 2_7.2	7.2	0.60	2.1	2.1	3.5	3.4	4.7	4.7	1.5
A 10 2_8.5	8.5	0.45	1.9	1.9	3.3	3.1	4.5	4.5	1.4
A 10 2_9.6	9.6	0.30	1.8	1.8	3.2	3.1	4.4	4.4	1.3
A 10 2_10.6	10.6	0.50	2.0	2.0	3.4	3.3	4.6	4.6	1.4
A 10 2_12.3	12.3	0.20	1.7	1.7	3.1	3.0	4.3	4.3	1.1
A 10 2_13.9	13.9	0.30	1.8	1.8	3.2	3.1	4.6	4.6	1.2
A 10 2_16.4	16.4	0.25	1.7	1.7	3.1	3.0	4.3	4.3	1.1
A 10 2_18.6	18.6	0.20	1.7	1.7	3.1	3.0	4.3	4.3	1.0
A 10 2_21.4	21.4	0.15	1.6	1.6	3.0	2.9	4.2	4.2	1.0
A 10 2_23.8	23.8	0.10	1.6	1.6	3.0	2.9	4.2	4.2	1.0
A 10 2_25.5	25.5	0.10	1.6	1.6	3.0	2.9	4.2	4.2	1.0
A 10 2_28.6	28.6	0.10	1.6	1.6	3.0	2.9	4.2	4.2	0.90
A 10 2_32.2	32.2	0.08	1.6	1.6	3.0	2.9	4.2	4.2	0.90
A 10 2_35.1	35.1	0.07	1.6	1.6	3.0	2.9	4.2	4.2	0.90
A 10 2_40.9	40.9	0.06	1.6	1.6	3.0	2.9	4.2	4.2	0.90
A 10 2_45.4	45.4	0.05	1.6	1.6	3.0	2.9	4.2	4.2	0.90
A 10 2_51.3	51.3	0.03	1.5	1.5	2.9	2.8	4.1	4.1	0.90
A 10 2_58.6	58.6	0.03	1.5	1.5	2.9	2.8	4.1	4.1	0.90
A 10 2_65.9	65.9	0.02	1.5	1.5	2.9	2.8	4.1	4.1	0.90
A 10 2_76.4	76.4	0.02	1.5	1.5	—	—	—	—	0.90
A 10 2_91.6	91.6	0.01	1.5	1.5	—	—	—	—	0.90

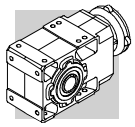

A 10

	i	J (•10-4) [kgm2]									
		SERVO									
		60A		60B 80A		95A		80C 95B 110A		95C 110B	
		SK	SC	SK	SC	SK	SC	SK	SC	SK	SC
A 10 2_5.5	5.5	1.3	1.5	1.3	1.7	3.8	4.3	3.9	4.4	3.8	4.8
A 10 2_6.3	6.3	1.1	1.3	1.1	1.5	3.6	4.1	3.7	4.2	3.6	4.6
A 10 2_7.2	7.2	0.87	1.1	0.89	1.3	3.4	3.9	3.5	4.0	3.4	4.4
A 10 2_8.5	8.5	0.72	0.98	0.74	1.2	3.3	3.7	3.3	3.8	3.1	4.1
A 10 2_9.6	9.6	0.57	0.83	0.59	1.0	3.1	3.6	3.2	3.7	3.1	4.1
A 10 2_10.6	10.6	0.77	1.0	0.79	1.2	3.3	3.8	3.4	3.9	3.3	4.3
A 10 2_12.3	12.3	0.47	0.73	0.49	0.93	3.0	3.5	3.1	3.6	3.0	4.0
A 10 2_13.9	13.9	0.57	0.83	0.59	1.0	3.1	3.6	3.2	3.7	3.1	4.1
A 10 2_16.4	16.4	0.52	0.78	0.54	0.98	3.1	3.5	3.1	3.6	3.0	4.0
A 10 2_18.6	18.6	0.47	0.73	0.49	0.93	3.0	3.5	3.1	3.6	3.0	4.0
A 10 2_21.4	21.4	0.42	0.68	0.44	0.88	3.0	3.4	3.0	3.5	2.9	3.9
A 10 2_23.8	23.8	0.37	0.63	0.39	0.83	2.9	3.4	3.0	3.5	2.9	3.9
A 10 2_25.5	25.5	0.37	0.63	0.39	0.83	2.9	3.4	3.0	3.5	2.9	3.9
A 10 2_28.6	28.6	0.37	0.63	0.39	0.83	2.9	3.4	3.0	3.5	2.9	3.9
A 10 2_32.2	32.2	0.35	0.61	0.37	0.81	2.9	3.3	3.0	3.5	2.9	3.9
A 10 2_35.1	35.1	0.34	0.60	0.36	0.80	2.9	3.3	3.0	3.5	2.9	3.9
A 10 2_40.9	40.9	0.33	0.59	0.35	0.79	2.9	3.3	3.0	3.5	2.9	3.9
A 10 2_45.4	45.4	0.32	0.58	0.34	0.78	2.9	3.3	3.0	3.5	2.9	3.9
A 10 2_51.3	51.3	0.30	0.56	0.32	0.76	2.9	3.3	2.9	3.4	2.8	3.8
A 10 2_58.6	58.6	0.30	0.56	—	—	—	—	2.9	3.4	2.8	3.8
A 10 2_65.9	65.9	0.29	0.55	—	—	—	—	2.9	3.4	2.8	3.8
A 10 2_76.4	76.4	0.29	0.55	—	—	—	—	—	—	—	—
A 10 2_91.6	91.6	0.28	0.54	—	—	—	—	—	—	—	—

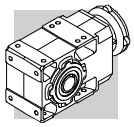

A 20

	i	J (•10-4) [kgm2]							
			IEC						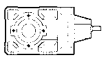
			63	71	80	90	100	112	
A 20 2_5.4	5.4	2.4	—	—	5.3	5.2	6.5	6.5	4.3
A 20 2_6.5	6.5	1.9	—	—	4.8	4.7	6.0	6.0	3.8
A 20 2_7.3	7.3	1.4	2.9	2.9	4.3	4.2	5.5	5.5	3.3
A 20 2_8.4	8.4	1.1	2.6	2.6	4.0	3.9	5.2	5.2	3.0
A 20 2_9.4	9.4	0.90	2.4	2.4	3.8	3.7	5.0	5.0	2.8
A 20 2_10.3	10.3	1.2	—	—	4.1	4.0	5.3	5.3	3.0
A 20 2_12.0	12.0	0.50	2.0	2.0	3.4	3.3	4.6	4.6	2.4
A 20 2_14.1	14.1	0.70	2.2	2.2	3.6	3.5	4.8	4.8	2.6
A 20 2_16.2	16.2	0.55	2.0	2.0	3.4	3.3	4.6	4.6	2.5
A 20 2_18.1	18.1	0.40	1.9	1.9	3.3	3.2	4.5	4.5	2.4
A 20 2_21.2	21.2	0.35	1.8	1.8	3.2	3.1	4.4	4.4	2.3
A 20 2_23.1	23.1	0.30	1.8	1.8	3.2	3.1	4.4	4.4	2.2
A 20 2_26.5	26.5	0.25	1.7	1.7	3.1	3.0	4.3	4.3	2.1
A 20 2_29.2	29.2	0.20	1.7	1.7	3.1	3.0	4.3	4.3	2.1
A 20 2_31.3	31.3	0.20	1.7	1.7	3.1	3.0	4.3	4.3	2.1
A 20 2_35.4	35.4	0.20	1.7	1.7	3.1	3.0	4.3	4.3	2.1
A 20 2_39.6	39.6	0.10	1.6	1.6	3.0	2.9	4.2	4.2	2.0
A 20 2_43.2	43.2	0.10	1.6	1.6	3.0	2.9	4.2	4.2	2.0
A 20 2_48.3	48.3	0.10	1.6	1.6	3.0	2.9	4.2	4.2	2.0
A 20 2_53.7	53.7	0.10	1.6	1.6	3.0	2.9	4.2	4.2	2.0
A 20 2_63.1	63.1	0.10	1.6	1.6	3.0	2.9	4.2	4.2	2.0
A 20 2_71.0	71.0	0.05	1.5	1.5	2.9	2.8	4.1	4.1	2.0
A 20 2_79.9	79.9	0.03	1.5	1.5	2.9	2.8	4.1	4.1	2.0
A 20 2_92.3	92.3	0.02	1.5	1.5	—	—	—	—	2.0
A 20 3_109.2	109.2	0.02	1.5	1.5	2.9	2.8	4.1	4.1	0.90
A 20 3_120.5	120.5	0.02	1.5	1.5	2.9	2.8	4.1	4.1	0.90
A 20 3_129.1	129.1	0.02	1.5	1.5	2.9	2.8	4.1	4.1	0.90
A 20 3_146.1	146.1	0.02	1.5	1.5	2.9	2.8	4.1	4.1	0.90
A 20 3_163.4	163.4	0.01	1.5	1.5	2.9	2.8	4.1	4.1	0.90
A 20 3_178.3	178.3	0.01	1.5	1.5	2.9	2.8	4.1	4.1	0.90
A 20 3_199.2	199.2	0.01	1.5	1.5	2.9	2.8	4.1	4.1	0.90
A 20 3_221.3	221.3	0.01	1.5	1.5	2.9	2.8	4.1	4.1	0.90
A 20 3_260.5	260.5	0.01	1.5	1.5	2.9	2.8	4.1	4.1	0.90
A 20 3_292.8	292.8	0.01	1.5	1.5	2.9	2.8	4.1	4.1	0.90
A 20 3_329.4	329.4	0.01	1.5	1.5	2.9	2.8	4.1	4.1	0.90
A 20 3_380.9	380.9	0.01	1.5	1.5	2.9	2.8	4.1	4.1	0.90

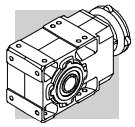

A 20

	i	J (•10-4) [kgm2]									
		SERVO									
		60A		60B 80A		95A		80C 95B 110A		95C 110B	
		SK	SC	SK	SC	SK	SC	SK	SC	SK	SC
A 20 2_5.4	5.4	—	—	—	—	—	—	5.3	5.8	5.2	6.2
A 20 2_6.5	6.5	—	—	—	—	—	—	4.8	5.3	4.7	5.7
A 20 2_7.3	7.3	1.7	1.9	1.7	2.1	4.2	4.7	4.3	4.8	4.2	5.2
A 20 2_8.4	8.4	1.4	1.6	1.4	1.8	3.9	4.6	4.0	4.5	3.9	4.9
A 20 2_9.4	9.4	1.2	1.4	1.2	1.6	3.7	4.2	3.8	4.3	3.7	4.7
A 20 2_10.3	10.3	—	—	—	—	—	—	4.1	4.6	4.0	5.0
A 20 2_12.0	12.0	0.77	1.0	0.79	1.2	3.3	3.8	3.4	3.9	3.3	4.3
A 20 2_14.1	14.1	0.97	1.2	0.99	1.4	3.5	4.0	3.6	4.1	3.5	4.5
A 20 2_16.2	16.2	0.82	1.1	0.84	1.3	3.4	3.8	3.4	3.9	3.3	4.3
A 20 2_18.1	18.1	0.67	0.93	0.69	1.1	3.2	3.7	3.3	3.8	3.2	4.2
A 20 2_21.2	21.2	0.62	0.88	0.64	1.1	3.2	3.6	3.2	3.7	3.1	4.1
A 20 2_23.1	23.1	0.57	0.83	0.59	1.0	3.1	3.6	3.2	3.7	3.1	4.1
A 20 2_26.5	26.5	0.52	0.78	0.54	0.98	3.1	3.5	3.1	3.6	3.0	4.0
A 20 2_29.2	29.2	0.47	0.73	0.49	0.93	3.0	3.5	3.1	3.6	3.0	4.0
A 20 2_31.3	31.3	0.47	0.73	0.49	0.93	3.0	3.5	3.1	3.6	3.0	4.0
A 20 2_35.4	35.4	0.47	0.73	0.49	0.93	3.0	3.5	3.1	3.6	3.0	4.0
A 20 2_39.6	39.6	0.37	0.63	0.39	0.83	2.9	3.4	3.0	3.5	2.9	3.9
A 20 2_43.2	43.2	0.37	0.63	0.39	0.83	2.9	3.4	3.0	3.5	2.9	3.9
A 20 2_48.3	48.3	0.37	0.63	0.39	0.83	2.9	3.4	3.0	3.5	2.9	3.9
A 20 2_53.7	53.7	0.37	0.63	0.39	0.83	2.9	3.4	3.0	3.5	2.9	3.9
A 20 2_63.1	63.1	0.37	0.63	0.39	0.83	2.9	3.4	3.0	3.5	2.9	3.9
A 20 2_71.0	71.0	0.32	0.58	—	—	—	—	2.9	3.4	2.8	3.8
A 20 2_79.9	79.9	0.30	0.56	—	—	—	—	2.9	3.4	2.8	3.8
A 20 2_92.3	92.3	0.29	0.55	—	—	—	—	—	—	—	—
A 20 3_109.2	109.2	0.29	0.55	0.31	0.75	2.8	3.3	2.9	3.4	2.8	3.8
A 20 3_120.5	120.5	0.29	0.55	0.31	0.75	2.8	3.3	2.9	3.4	2.8	3.8
A 20 3_129.1	129.1	0.29	0.55	0.31	0.75	2.8	3.3	2.9	3.4	2.8	3.8
A 20 3_146.1	146.1	0.29	0.55	0.31	0.75	2.8	3.3	2.9	3.4	2.8	3.8
A 20 3_163.4	163.4	0.28	0.54	0.30	0.74	2.8	3.3	2.9	3.4	2.8	3.8
A 20 3_178.3	178.3	0.28	0.54	0.30	0.74	2.8	3.3	2.9	3.4	2.8	3.8
A 20 3_199.2	199.2	0.28	0.54	0.30	0.74	2.8	3.3	2.9	3.4	2.8	3.8
A 20 3_221.3	221.3	0.28	0.54	0.30	0.74	2.8	3.3	2.9	3.4	2.8	3.8
A 20 3_260.5	260.5	0.28	0.54	0.30	0.74	2.8	3.3	2.9	3.4	2.8	3.8
A 20 3_292.8	292.8	0.28	0.54	0.30	0.74	2.8	3.3	2.9	3.4	2.8	3.8
A 20 3_329.4	329.4	0.28	0.54	0.30	0.74	2.8	3.3	2.9	3.4	2.8	3.8
A 20 3_380.9	380.9	0.28	0.54	0.30	0.74	2.8	3.3	2.9	3.4	2.8	3.8

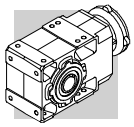

A 30

	i	J (•10-4) [kgm2]							
			IEC						
			63	71	80	90	100	112	
A 30 2_5.4	5.4	4.5	—	—	7.4	7.3	8.6	8.6	6.9
A 30 2_6.4	6.4	3.4	—	—	6.6	6.6	7.8	7.8	6.0
A 30 2_7.0	7.0	2.9	—	—	5.8	5.8	7.0	7.0	5.2
A 30 2_8.5	8.5	2.2	—	—	5.1	5.1	6.3	6.3	4.6
A 30 2_9.3	9.3	1.6	3.1	3.1	4.5	4.4	5.7	5.7	4.0
A 30 2_10.5	10.5	2.3	—	—	5.2	5.1	6.4	6.4	4.6
A 30 2_11.8	11.8	1.1	2.6	2.6	4.0	3.9	5.2	5.2	3.4
A 30 2_13.6	13.6	1.5	—	—	4.4	4.3	5.6	5.6	3.9
A 30 2_16.3	16.3	1.2	—	—	4.1	4.0	5.3	5.3	3.5
A 30 2_18.0	18.0	0.90	2.4	2.4	3.8	3.7	5.0	5.0	3.2
A 30 2_20.5	20.5	0.70	2.2	2.2	3.6	3.5	4.8	4.8	3.1
A 30 2_22.8	22.8	0.60	2.1	2.1	3.5	3.4	4.7	4.7	3.0
A 30 2_26.5	26.5	0.50	2.0	2.0	3.4	3.3	4.6	4.6	2.9
A 30 2_29.3	29.3	0.40	1.9	1.9	3.3	3.2	4.5	4.5	2.8
A 30 2_33.4	33.4	0.35	1.8	1.8	3.2	3.1	4.4	4.4	2.7
A 30 2_36.6	36.6	0.30	1.8	1.8	3.2	3.1	4.4	4.4	2.7
A 30 2_39.3	39.3	0.25	1.7	1.7	3.1	3.0	4.3	4.3	2.6
A 30 2_43.4	43.4	0.20	1.7	1.7	3.1	3.0	4.3	4.3	2.6
A 30 2_48.3	48.3	0.20	1.7	1.7	3.1	3.0	4.3	4.3	2.6
A 30 2_52.7	52.7	0.20	1.7	1.7	3.1	3.0	4.3	4.3	2.5
A 30 2_59.4	59.4	0.10	1.6	1.6	3.0	2.9	4.2	4.2	2.5
A 30 2_66.0	66.0	0.10	1.6	1.6	3.0	2.9	4.2	4.2	2.5
A 30 2_76.5	76.5	0.10	1.6	1.6	3.0	2.9	4.2	4.2	2.5
A 30 2_86.7	86.7	0.10	1.6	1.6	3.0	2.9	4.2	4.2	2.5
A 30 2_97.5	97.5	0.10	1.6	1.6	3.0	2.9	4.2	4.2	2.4
A 30 3_109.1	109.1	0.10	1.6	1.6	3.0	2.9	4.2	4.2	0.90
A 30 3_120.5	120.5	0.10	1.6	1.6	3.0	2.9	4.2	4.2	0.90
A 30 3_137.4	137.4	0.10	1.6	1.6	3.0	2.9	4.2	4.2	0.90
A 30 3_150.7	150.7	0.10	1.6	1.6	3.0	2.9	4.2	4.2	0.90
A 30 3_161.4	161.4	0.10	1.6	1.6	3.0	2.9	4.2	4.2	0.90
A 30 3_178.5	178.5	0.10	1.6	1.6	3.0	2.9	4.2	4.2	0.90
A 30 3_198.5	198.5	0.10	1.6	1.6	3.0	2.9	4.2	4.2	0.90
A 30 3_216.6	216.6	0.10	1.6	1.6	3.0	2.9	4.2	4.2	0.90
A 30 3_244.3	244.3	0.10	1.6	1.6	3.0	2.9	4.2	4.2	0.90
A 30 3_271.5	271.5	0.10	1.6	1.6	3.0	2.9	4.2	4.2	0.90
A 30 3_314.5	314.5	0.10	1.6	1.6	3.0	2.9	4.2	4.2	0.90
A 30 3_356.3	356.3	0.06	1.6	1.6	3.0	2.9	4.2	4.2	0.90
A 30 3_400.8	400.8	0.04	1.5	1.6	2.9	2.8	4.1	4.1	0.90

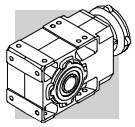

A 30

	i	J (•10-4) [kgm2]											
		SERVO											
		60A		60B 80A		95A		80C 95B 110A		95C 110B		130A	
		SK	SC	SK	SC	SK	SC	SK	SC	SK	SC	SK	SC
A 30 2_5.4	5.4	—	—	—	—	—	—	7.4	7.9	7.3	8.3	7.3	8.3
A 30 2_6.4	6.4	—	—	—	—	—	—	6.6	7.1	6.6	7.6	6.6	7.6
A 30 2_7.0	7.0	—	—	—	—	—	—	5.8	6.3	5.8	6.8	5.8	6.8
A 30 2_8.5	8.5	—	—	—	—	—	—	5.1	5.6	5.1	6.1	5.1	6.1
A 30 2_9.3	9.3	1.9	2.1	1.9	2.3	4.4	4.9	4.5	5.0	4.4	5.4	4.4	5.4
A 30 2_10.5	10.5	—	—	—	—	—	—	5.2	5.7	5.1	6.1	5.1	6.1
A 30 2_11.8	11.8	1.4	1.6	1.4	1.8	3.9	4.4	4.0	4.5	3.9	4.9	3.9	4.9
A 30 2_13.6	13.6	—	—	—	—	—	—	4.4	4.9	4.3	5.3	4.3	5.3
A 30 2_16.3	16.3	—	—	—	—	—	—	4.1	4.6	4.0	5.0	4.0	5.0
A 30 2_18.0	18.0	1.2	1.4	1.2	1.6	3.7	4.2	3.8	4.3	3.7	4.7	3.7	4.7
A 30 2_20.5	20.5	0.97	1.2	0.99	1.4	3.5	4.0	3.6	4.1	3.5	4.5	3.5	4.5
A 30 2_22.8	22.8	0.87	1.1	0.89	1.3	3.4	3.9	3.5	4.0	3.4	4.4	3.4	4.4
A 30 2_26.5	26.5	0.77	1.0	0.79	1.2	3.3	3.8	3.4	3.9	3.3	4.3	3.3	4.3
A 30 2_29.3	29.3	0.67	0.93	0.69	1.1	3.2	3.7	3.3	3.8	3.2	4.2	3.2	4.2
A 30 2_33.4	33.4	0.62	0.88	0.64	1.1	3.2	3.6	3.2	3.7	3.1	4.1	3.1	4.1
A 30 2_36.6	36.6	0.57	0.83	0.59	1.0	3.1	3.6	3.2	3.7	3.1	4.1	3.1	4.1
A 30 2_39.3	39.3	0.52	0.78	0.54	0.98	3.1	3.5	3.1	3.6	3.0	4.0	3.0	4.0
A 30 2_43.4	43.4	0.47	0.73	0.49	0.93	3.0	3.5	3.1	3.6	3.0	4.0	3.0	4.0
A 30 2_48.3	48.3	0.47	0.73	0.49	0.93	3.0	3.5	3.1	3.6	3.0	4.0	3.0	4.0
A 30 2_52.7	52.7	0.47	0.73	0.49	0.93	3.0	3.5	3.1	3.6	3.0	4.0	3.0	4.0
A 30 2_59.4	59.4	0.37	0.63	0.39	0.83	2.9	3.4	3.0	3.5	2.9	3.9	2.9	3.9
A 30 2_66.0	66.0	0.37	0.63	0.39	0.83	2.9	3.4	3.0	3.5	2.9	3.9	2.9	3.9
A 30 2_76.5	76.5	0.37	0.63	0.39	0.83	2.9	3.4	3.0	3.5	2.9	3.9	2.9	3.9
A 30 2_86.7	86.7	0.37	0.63	—	—	—	—	3.0	3.5	2.9	3.9	2.9	3.9
A 30 2_97.5	97.5	0.37	0.63	—	—	—	—	3.0	3.5	2.9	3.9	2.9	3.9
A 30 3_109.1	109.1	0.37	0.63	0.39	0.83	2.9	3.4	3.0	3.5	2.9	3.9	—	—
A 30 3_120.5	120.5	0.37	0.63	0.39	0.83	2.9	3.4	3.0	3.5	2.9	3.9	—	—
A 30 3_137.4	137.4	0.37	0.63	0.39	0.83	2.9	3.4	3.0	3.5	2.9	3.9	—	—
A 30 3_150.7	150.7	0.37	0.63	0.39	0.83	2.9	3.4	3.0	3.5	2.9	3.9	—	—
A 30 3_161.4	161.4	0.37	0.63	0.39	0.83	2.9	3.4	3.0	3.5	2.9	3.9	—	—
A 30 3_178.5	178.5	0.37	0.63	0.39	0.83	2.9	3.4	3.0	3.5	2.9	3.9	—	—
A 30 3_198.5	198.5	0.37	0.63	0.39	0.83	2.9	3.4	3.0	3.5	2.9	3.9	—	—
A 30 3_216.6	216.6	0.37	0.63	0.39	0.83	2.9	3.4	3.0	3.5	2.9	3.9	—	—
A 30 3_244.3	244.3	0.37	0.63	0.39	0.83	2.9	3.4	3.0	3.5	2.9	3.9	—	—
A 30 3_271.5	271.5	0.37	0.63	0.39	0.83	2.9	3.4	3.0	3.5	2.9	3.9	—	—
A 30 3_314.5	314.5	0.37	0.63	0.39	0.83	2.9	3.4	3.0	3.5	2.9	3.9	—	—
A 30 3_356.3	356.3	0.33	0.59	0.35	0.79	2.9	3.3	3.0	3.5	2.9	3.9	—	—
A 30 3_400.8	400.8	0.31	0.57	0.33	0.77	2.9	3.3	2.9	3.4	2.8	3.8	—	—

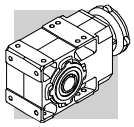

A 35

	i	J (•10-4) [kgm2]								
			IEC							
			63	71	80	90	100	112	132	
A 35 2_5.4	5.4	7.3	—	—	10	9.9	11	11	24	9.4
A 35 2_6.4	6.4	5.4	—	—	8.1	8.0	9.2	9.2	22	7.4
A 35 2_7.0	7.0	4.6	—	—	7.3	7.2	8.4	8.4	21	6.6
A 35 2_8.5	8.5	3.3	—	—	6.1	5.9	7.1	7.1	20	5.4
A 35 2_9.3	9.3	2.8	3.5	3.5	5.6	5.4	6.6	6.6	19	4.9
A 35 2_10.6	10.6	2.1	2.9	2.9	4.9	4.8	6.0	6.0	19	4.2
A 35 2_11.8	11.8	1.8	2.5	2.5	4.6	4.4	5.7	5.7	18	3.9
A 35 2_13.1	13.1	3.0	—	—	5.7	5.6	6.8	6.8	—	5.0
A 35 2_15.5	15.5	2.2	—	—	5.0	4.9	6.1	6.1	—	4.3
A 35 2_17.0	17.0	2.0	—	—	4.7	4.6	5.8	5.8	—	4.0
A 35 2_20.4	20.4	1.6	—	—	4.3	4.2	5.4	5.4	—	3.6
A 35 2_22.5	22.5	1.3	2.0	2.0	4.1	3.9	5.1	5.1	—	3.4
A 35 2_25.7	25.7	0.97	1.7	1.7	3.7	3.6	4.8	4.8	—	3.0
A 35 2_28.4	28.4	0.86	1.6	1.6	3.6	3.5	4.7	4.7	—	2.9
A 35 2_33.2	33.2	0.69	1.4	1.4	3.5	3.3	4.5	4.5	—	2.8
A 35 2_36.6	36.6	0.58	1.3	1.3	3.3	3.2	4.4	4.4	—	2.6
A 35 2_41.8	41.8	0.48	1.2	1.2	3.2	3.1	4.3	4.3	—	2.5
A 35 2_45.8	45.8	0.42	1.1	1.1	3.2	3.1	4.3	4.3	—	2.5
A 35 2_49.1	49.1	0.38	1.1	1.1	3.1	3.0	4.2	4.2	—	2.4
A 35 2_54.3	54.3	0.33	1.1	1.0	3.1	3.0	4.2	4.2	—	2.4
A 35 2_60.4	60.4	0.29	1.0	1.0	3.0	2.9	4.1	4.1	—	2.3
A 35 2_65.8	65.8	0.25	1.0	1.0	3.0	2.9	4.1	4.1	—	2.3
A 35 2_74.3	74.3	0.21	0.95	0.93	3.0	2.8	4.1	4.1	—	2.3
A 35 2_82.5	82.5	0.18	0.92	0.90	2.9	2.8	4.0	4.0	—	2.2
A 35 2_95.6	95.6	0.15	0.88	0.87	2.9	2.8	4.0	4.0	—	2.2
A 35 3_105.5	105.5	0.11	0.89	0.87	2.9	2.8	4.0	4.0	—	0.80
A 35 3_116.9	116.9	0.11	0.88	0.87	2.9	2.8	4.0	4.0	—	0.79
A 35 3_136.3	136.3	0.10	0.87	0.86	2.9	2.8	4.0	4.0	—	0.78
A 35 3_150.6	150.6	0.09	0.86	0.85	2.9	2.8	4.0	4.0	—	0.77
A 35 3_171.8	171.8	0.08	0.86	0.84	2.9	2.8	4.0	4.0	—	0.77
A 35 3_188.3	188.3	0.08	0.85	0.84	2.9	2.7	4.0	4.0	—	0.76
A 35 3_201.8	201.8	0.08	0.85	0.84	2.9	2.7	4.0	4.0	—	0.76
A 35 3_223.2	223.2	0.08	0.85	0.84	2.9	2.7	4.0	4.0	—	0.76
A 35 3_248.1	248.1	0.07	0.85	0.83	2.9	2.7	4.0	4.0	—	0.76
A 35 3_270.7	270.7	0.07	0.84	0.83	2.9	2.7	4.0	4.0	—	0.75
A 35 3_305.4	305.4	0.07	0.84	0.83	2.9	2.7	4.0	4.0	—	0.75
A 35 3_339.3	339.3	0.07	0.84	0.83	2.9	2.7	4.0	4.0	—	0.75
A 35 3_393.2	393.2	0.07	0.84	0.83	2.9	2.7	3.9	3.9	—	0.75

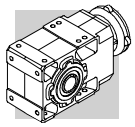

A 35

	i	J (•10-4) [kgm2]											
		SERVO											
		60A		60B 80A		95A		80C 95B 110A		95C 110B		130A	
		SK	SC	SK	SC	SK	SC	SK	SC	SK	SC	SK	SC
A 35 2_5.4	5.4	—	—	—	—	—	—	10	11	9.9	10.9	9.9	11
A 35 2_6.4	6.4	—	—	—	—	—	—	8.1	8.6	8.0	9.0	8.0	9.0
A 35 2_7.0	7.0	—	—	—	—	—	—	7.3	7.8	7.2	8.2	7.2	8.2
A 35 2_8.5	8.5	—	—	—	—	—	—	6.1	6.6	5.9	6.9	5.9	6.9
A 35 2_9.3	9.3	3.1	3.3	3.1	3.5	5.6	6.1	5.6	6.1	5.4	6.4	5.4	6.4
A 35 2_10.6	10.6	2.4	2.6	2.4	2.8	4.9	5.4	4.9	5.4	4.8	5.8	4.8	5.8
A 35 2_11.8	11.8	2.1	2.3	2.1	2.5	4.6	5.1	4.6	5.1	4.4	5.4	4.4	5.4
A 35 2_13.1	13.1	—	—	—	—	—	—	5.7	6.2	5.6	6.6	5.6	6.6
A 35 2_15.5	15.5	—	—	—	—	—	—	5.0	5.5	4.9	5.9	4.9	5.9
A 35 2_17.0	17.0	—	—	—	—	—	—	4.7	5.2	4.6	5.6	4.6	5.6
A 35 2_20.4	20.4	—	—	—	—	—	—	4.3	4.8	4.2	5.2	4.2	5.2
A 35 2_22.5	22.5	1.6	1.8	1.6	2.0	4.1	4.6	4.1	4.6	3.9	4.9	3.9	4.9
A 35 2_25.7	25.7	1.2	1.5	1.3	1.7	3.8	4.2	3.7	4.2	3.6	4.6	3.6	4.6
A 35 2_28.4	28.4	1.1	1.4	1.2	1.6	3.7	4.1	3.6	4.1	3.5	4.5	3.5	4.5
A 35 2_33.2	33.2	0.96	1.2	0.98	1.4	3.5	3.9	3.5	4.0	3.3	4.3	3.3	4.3
A 35 2_36.6	36.6	0.85	1.1	0.87	1.3	3.4	3.8	3.3	3.8	3.2	4.2	3.2	4.2
A 35 2_41.8	41.8	0.75	1.0	0.77	1.2	3.3	3.7	3.2	3.7	3.1	4.1	3.1	4.1
A 35 2_45.8	45.8	0.69	0.95	0.71	1.1	3.2	3.7	3.2	3.7	3.1	4.1	3.1	4.1
A 35 2_49.1	49.1	0.65	0.91	0.67	1.1	3.2	3.6	3.1	3.6	3.0	4.0	3.0	4.0
A 35 2_54.3	54.3	0.60	0.86	0.62	1.1	3.2	3.6	3.1	3.6	3.0	4.0	3.0	4.0
A 35 2_60.4	60.4	0.56	0.82	0.58	1.0	3.1	3.5	3.0	3.5	2.9	3.9	2.9	3.9
A 35 2_65.8	65.8	0.52	0.78	0.54	0.98	3.1	3.5	3.0	3.5	2.9	3.9	2.9	3.9
A 35 2_74.3	74.3	0.48	0.74	0.50	0.94	3.0	3.5	3.0	3.5	2.8	3.8	2.8	3.8
A 35 2_82.5	82.5	0.45	0.71	0.47	0.91	3.0	3.4	2.9	3.4	2.8	3.8	2.8	3.8
A 35 2_95.6	95.6	0.42	0.68	0.44	0.88	3.0	3.4	2.9	3.4	2.8	3.8	2.8	3.8
A 35 3_105.5	105.5	0.38	0.64	0.40	0.84	2.9	3.4	2.9	3.4	2.8	3.8	—	—
A 35 3_116.9	116.9	0.38	0.64	0.40	0.84	2.9	3.4	2.9	3.4	2.8	3.8	—	—
A 35 3_136.3	136.3	0.37	0.63	0.39	0.83	2.9	3.4	2.9	3.4	2.8	3.8	—	—
A 35 3_150.6	150.6	0.36	0.62	0.38	0.82	2.9	3.3	2.9	3.4	2.8	3.8	—	—
A 35 3_171.8	171.8	0.35	0.61	0.37	0.81	2.9	3.3	2.9	3.4	2.8	3.8	—	—
A 35 3_188.3	188.3	0.35	0.61	0.37	0.81	2.9	3.3	2.9	3.4	2.7	3.7	—	—
A 35 3_201.8	201.8	0.35	0.61	0.37	0.81	2.9	3.3	2.9	3.4	2.7	3.7	—	—
A 35 3_223.2	223.2	0.35	0.61	0.37	0.81	2.9	3.3	2.9	3.4	2.7	3.7	—	—
A 35 3_248.1	248.1	0.34	0.60	0.36	0.80	2.9	3.3	2.9	3.4	2.7	3.7	—	—
A 35 3_270.7	270.7	0.34	0.60	0.36	0.80	2.9	3.3	2.9	3.4	2.7	3.7	—	—
A 35 3_305.4	305.4	0.34	0.60	0.36	0.80	2.9	3.3	2.9	3.4	2.7	3.7	—	—
A 35 3_339.3	339.3	0.34	0.60	0.36	0.80	2.9	3.3	2.9	3.4	2.7	3.7	—	—
A 35 3_393.2	393.2	0.34	0.60	0.36	0.80	2.9	3.3	2.9	3.4	2.7	3.7	—	—

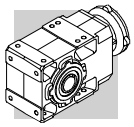

A 41

	i	J (•10-4) [kgm2]								
			IEC							
			63	71	80	90	100	112	132	
A 41 2_5.2	5.2	13	—	—	16	16	17	17	32	23
A 41 2_7.1	7.1	7.3	—	—	10	10	11	11	26	18
A 41 2_8.3	8.3	5.9	—	—	8.8	8.7	10	10	25	16
A 41 2_9.2	9.2	4.5	—	—	7.4	7.3	8.6	8.6	23	15
A 41 2_10.1	10.1	5.9	—	—	8.8	8.7	10	10	25	16
A 41 2_11.7	11.7	2.9	4.4	4.4	5.8	5.7	7.0	7.0	22	13
A 41 2_13.8	13.8	3.6	—	—	6.5	6.4	7.7	7.7	23	14
A 41 2_16.1	16.1	2.9	—	—	5.8	5.7	7.0	7.0	22	13
A 41 2_17.8	17.8	2.2	—	—	5.1	5.0	6.3	6.3	21	11
A 41 2_22.7	22.7	1.5	3.0	3.0	4.4	4.3	5.6	5.6	20	11
A 41 2_28.3	28.3	1.1	2.6	2.6	4.0	3.9	5.2	5.2	20	10
A 41 2_35.9	35.9	1.7	3.2	3.2	4.6	4.5	5.8	5.8	20	9.8
A 41 2_45.1	45.1	1.5	3.0	3.0	4.4	4.3	5.6	5.6	20	9.6
A 41 2_48.3	48.3	1.4	2.9	2.9	4.3	4.2	5.5	5.5	—	9.5
A 41 2_53.1	53.1	1.4	2.9	2.9	4.3	4.2	5.5	5.5	—	9.5
A 41 2_58.8	58.8	1.3	2.8	2.8	4.2	4.1	5.4	5.4	—	9.4
A 41 2_64.2	64.2	1.3	2.8	2.8	4.2	4.1	5.4	5.4	—	9.4
A 41 2_71.3	71.3	1.2	2.7	2.7	4.1	4.0	5.3	5.3	—	9.3
A 41 2_79.2	79.2	1.2	2.7	2.7	4.1	4.0	5.3	5.3	—	9.3
A 41 3_92.8	92.8	1.1	2.6	2.6	4.0	3.9	5.2	5.2	—	9.2
A 41 3_115.9	115.9	0.20	1.7	1.7	2.9	3.0	4.3	4.3	—	2.1
A 41 3_146.9	146.9	0.10	1.6	1.6	2.8	2.9	4.2	4.2	—	2.1
A 41 3_184.4	184.4	0.10	1.6	1.6	2.8	2.9	4.2	4.2	—	2.1
A 41 3_197.5	197.5	0.10	1.6	1.6	2.8	2.9	4.2	4.2	—	2.0
A 41 3_217.4	217.4	0.10	1.6	1.6	2.8	2.9	4.2	4.2	—	2.0
A 41 3_240.6	240.6	0.10	1.6	1.6	2.8	2.9	4.2	4.2	—	2.0
A 41 3_262.5	262.5	0.10	1.6	1.6	2.8	2.9	4.2	4.2	—	2.0
A 41 3_291.7	291.7	0.10	1.6	1.6	2.8	2.9	4.2	4.2	—	2.0
A 41 3_324.2	324.2	0.10	1.6	1.6	2.8	2.9	4.2	4.2	—	2.0
A 41 3_376.8	376.8	0.10	1.6	1.6	2.8	2.9	4.2	4.2	—	2.0

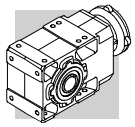

A 41

	i	J (•10-4) [kgm2]																	
		SERVO																	
		60A		60B 80A		80B		95A		80C 95B 110A		95C 110B		130A		130B 180A		180B	
		SK	SC	SK	SC	SK	SC	SK	SC	SK	SC	SK	SC	SK	SC	SK	SC	SK	SC
A 41 2_5.2	5.2	—	—	—	—	—	—	—	—	16	16.5	16	17	16	17	30	32	32	37
A 41 2_7.1	7.1	—	—	—	—	—	—	—	—	10	10.5	10	11	10	11	24	27	26	31
A 41 2_8.3	8.3	—	—	—	—	—	—	—	—	8.8	9.3	8.7	9.7	8.7	9.7	23	25	25	30
A 41 2_9.2	9.2	—	—	—	—	—	—	—	—	7.4	7.9	7.3	8.3	7.3	8.3	21	24	23	28
A 41 2_10.1	10.1	—	—	—	—	—	—	—	—	8.8	9.3	8.7	9.7	8.7	9.7	23	25	25	30
A 41 2_11.7	11.7	—	—	—	—	5.7	6.2	5.7	6.2	5.8	6.3	5.7	6.7	5.7	6.7	20	22	22	27
A 41 2_13.8	13.8	—	—	—	—	—	—	—	—	6.5	7.0	6.4	7.4	6.4	7.4	21	23	23	28
A 41 2_16.1	16.1	—	—	—	—	—	—	—	—	5.8	6.3	5.7	6.7	5.7	6.7	20	22	22	27
A 41 2_17.8	17.8	—	—	—	—	—	—	—	—	5.1	5.6	5.0	6.0	5.0	6.0	19	22	21	26
A 41 2_22.7	22.7	—	—	—	—	4.3	4.8	4.3	4.8	4.4	4.9	4.3	5.3	4.3	5.3	18	21	20	25
A 41 2_28.3	28.3	—	—	—	—	3.9	4.4	3.9	4.4	4.0	4.5	3.9	4.9	3.9	4.9	18	21	20	25
A 41 2_35.9	35.9	—	—	—	—	4.5	5.0	4.5	5.0	4.6	5.1	4.5	5.5	4.5	5.5	19	21	20	25
A 41 2_45.1	45.1	—	—	—	—	4.3	4.8	4.3	4.8	4.4	4.9	4.3	5.3	4.3	5.3	18	21	20	25
A 41 2_48.3	48.3	—	—	—	—	4.2	4.7	4.2	4.7	4.3	4.8	4.2	5.2	4.2	5.2	—	—	—	—
A 41 2_53.1	53.1	—	—	—	—	4.2	4.7	4.2	4.7	4.3	4.8	4.2	5.2	4.2	5.2	—	—	—	—
A 41 2_58.8	58.8	—	—	—	—	4.1	4.6	4.1	4.6	4.2	4.7	4.1	5.1	4.1	5.1	—	—	—	—
A 41 2_64.2	64.2	—	—	—	—	4.1	4.6	4.1	4.6	4.2	4.7	4.1	5.1	4.1	5.1	—	—	—	—
A 41 2_71.3	71.3	—	—	—	—	4.0	4.5	4.0	4.5	4.1	4.6	4.0	5.0	4.0	5.0	—	—	—	—
A 41 2_79.2	79.2	—	—	—	—	4.0	4.5	4.0	4.5	4.1	4.6	4.0	5.0	4.0	5.0	—	—	—	—
A 41 3_92.8	92.8	1.4	1.6	1.4	1.8	—	—	3.9	4.4	4.0	4.5	3.9	4.9	—	—	—	—	—	—
A 41 3_115.9	115.9	0.47	0.73	0.49	0.93	—	—	3.0	3.5	2.9	3.4	3.0	4.0	—	—	—	—	—	—
A 41 3_146.9	146.9	0.37	0.63	0.39	0.83	—	—	2.9	3.4	2.8	3.3	2.9	3.9	—	—	—	—	—	—
A 41 3_184.4	184.4	0.37	0.63	0.39	0.83	—	—	2.9	3.4	2.8	3.3	2.9	3.9	—	—	—	—	—	—
A 41 3_197.5	197.5	0.37	0.63	0.39	0.83	—	—	2.9	3.4	2.8	3.3	2.9	3.9	—	—	—	—	—	—
A 41 3_217.4	217.4	0.37	0.63	0.39	0.83	—	—	2.9	3.4	2.8	3.3	2.9	3.9	—	—	—	—	—	—
A 41 3_240.6	240.6	0.37	0.63	0.39	0.83	—	—	2.9	3.4	2.8	3.3	2.9	3.9	—	—	—	—	—	—
A 41 3_262.5	262.5	0.37	0.63	0.39	0.83	—	—	2.9	3.4	2.8	3.3	2.9	3.9	—	—	—	—	—	—
A 41 3_291.7	291.7	0.37	0.63	0.39	0.83	—	—	2.9	3.4	2.8	3.3	2.9	3.9	—	—	—	—	—	—
A 41 3_324.2	324.2	0.37	0.63	0.39	0.83	—	—	2.9	3.4	2.8	3.3	2.9	3.9	—	—	—	—	—	—
A 41 3_376.8	376.8	0.37	0.63	0.39	0.83	—	—	2.9	3.4	2.8	3.3	2.9	3.9	—	—	—	—	—	—

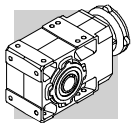

A 50

	i	J (•10-4) [kgm2]										
			IEC									
			63	71	80	90	100	112	132	160	180	
A 50 2_7.7	7.7	15	—	—	18	18	19	19	34	93	91	24
A 50 2_9.7	9.7	10	—	—	13	13	14	14	29	89	86	19
A 50 2_13.1	13.1	6.3	—	—	9.2	9.1	10	10	25	85	82	15
A 50 2_16.6	16.6	4.2	—	—	7.0	7.0	8.2	8.2	23	82	80	13
A 50 2_20.9	20.9	2.8	4.2	4.2	5.7	5.6	6.9	6.9	22	81	79	12
A 50 3_24.0	24.0	6.0	—	—	8.9	8.8	10	10	25	84	82	15
A 50 3_26.4	26.4	5.8	—	—	8.7	8.6	9.9	9.9	25	84	82	15
A 50 3_32.4	32.4	4.0	—	—	6.8	6.8	8.1	8.1	23	82	80	13
A 50 3_35.6	35.6	3.9	—	—	6.7	6.7	8.0	8.0	23	82	80	13
A 50 3_40.9	40.9	2.7	—	—	5.6	5.5	6.8	6.8	22	81	79	12
A 50 3_45.0	45.0	2.6	—	—	5.5	5.4	6.7	6.7	22	81	79	12
A 50 3_51.7	51.7	1.9	3.4	3.4	4.7	4.7	6.0	6.0	21	80	78	11
A 50 3_56.8	56.8	1.9	3.3	3.3	4.7	4.6	5.9	5.9	21	80	78	11
A 50 3_63.9	63.9	1.4	2.9	2.8	4.2	4.2	5.5	5.5	20	80	77	11
A 50 3_70.2	70.2	1.4	2.8	2.8	4.2	4.1	5.4	5.4	20	80	77	10
A 50 3_81.5	81.5	0.90	2.4	2.4	3.8	3.7	5.0	5.0	20	79	77	10
A 50 3_89.5	89.5	0.90	2.4	2.4	3.7	3.7	5.0	5.0	20	79	77	10
A 50 3_99.5	99.5	0.60	2.1	2.1	3.5	3.4	4.7	4.7	20	79	77	9.7
A 50 3_109.4	109.4	0.60	2.1	2.1	3.5	3.4	4.7	4.7	20	79	77	9.7
A 50 3_118.0	118.0	0.50	2.0	2.0	3.4	3.3	4.6	4.6	—	—	—	9.6
A 50 3_129.7	129.7	0.50	2.0	2.0	3.4	3.3	4.6	4.6	—	—	—	9.6
A 50 3_140.6	140.6	0.40	1.8	1.8	3.2	3.2	4.4	4.4	—	—	—	9.4
A 50 3_154.6	154.6	0.40	1.8	1.8	3.2	3.2	4.4	4.4	—	—	—	9.4
A 50 3_173.4	173.4	0.30	1.7	1.7	3.1	3.0	4.3	4.3	—	—	—	9.3
A 50 3_190.6	190.6	0.20	1.7	1.7	3.1	3.0	4.3	4.3	—	—	—	9.3

For the values of the moment of inertia of 4-stage gearboxes, please contact our Technical Service department.

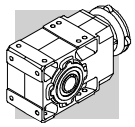

A 50

	i	J (•10-4) [kgm2]									
		SERVO									
		80B 95A		80C 95B 110A		95C 110B 130A		130B 180A		180B	
		SK	SC	SK	SC	SK	SC	SK	SC	SK	SC
A 50 2_7.7	7.7	—	—	18	19	18	19	32	34	34	39
A 50 2_9.7	9.7	—	—	13	14	13	14	27	29	29	34
A 50 2_13.1	13.1	—	—	9.2	9.7	9.1	10	23	26	25	30
A 50 2_16.6	16.6	—	—	7.0	7.5	7.0	8.0	21	24	23	28
A 50 2_20.9	20.9	5.6	6.1	5.7	6.2	5.6	6.6	20	22	22	27
A 50 3_24.0	24.0	—	—	8.9	9.4	8.8	9.8	23	25	25	30
A 50 3_26.4	26.4	—	—	8.7	9.2	8.6	9.6	23	25	25	30
A 50 3_32.4	32.4	—	—	6.8	7.3	6.8	7.8	21	23	23	28
A 50 3_35.6	35.6	—	—	6.7	7.2	6.7	7.7	21	23	23	28
A 50 3_40.9	40.9	—	—	5.6	6.1	5.5	6.5	20	22	22	27
A 50 3_45.0	45.0	—	—	5.5	6.0	5.4	6.4	20	22	22	27
A 50 3_51.7	51.7	4.7	5.1	4.7	5.2	4.7	5.7	19	21	21	26
A 50 3_56.8	56.8	4.7	5.1	4.7	5.2	4.6	5.6	19	21	21	26
A 50 3_63.9	63.9	4.2	4.7	4.2	5.2	4.2	5.2	18	21	20	25
A 50 3_70.2	70.2	4.2	4.7	4.2	5.2	4.1	5.1	18	21	20	25
A 50 3_81.5	81.5	3.7	4.1	3.8	4.3	3.7	4.7	18	20	20	25
A 50 3_89.5	89.5	3.7	4.1	3.7	4.2	3.7	4.7	18	20	20	25
A 50 3_99.5	99.5	3.4	3.9	3.5	4.0	3.4	4.4	18	20	20	25
A 50 3_109.4	109.4	3.4	3.9	3.5	4.0	3.4	4.4	18	20	20	25
A 50 3_118.0	118.0	3.3	3.8	3.4	4.0	3.3	4.3	—	—	—	—
A 50 3_129.7	129.7	3.3	3.8	3.4	4.0	3.3	4.3	—	—	—	—
A 50 3_140.6	140.6	3.2	3.7	3.2	3.7	3.2	4.2	—	—	—	—
A 50 3_154.6	154.6	3.2	3.7	3.2	3.7	3.2	4.2	—	—	—	—
A 50 3_173.4	173.4	3.1	3.6	3.1	3.6	3.0	4.0	—	—	—	—
A 50 3_190.6	190.6	3.0	3.5	3.1	3.6	3.0	4.0	—	—	—	—

For the values of the moment of inertia of 4-stage gearboxes, please contact our Technical Service department.

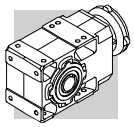

A 55

	i	J (•10-4) [kgm2]									
			IEC								
			63	71	80	90	100	112	132	160	180	
A 55 2_4.9	4.9	61	—	—	—	—	—	—	77	123	120	70
A 55 2_6.4	6.4	41	—	—	—	—	—	—	57	103	100	50
A 55 2_8.5	8.5	26	—	—	—	—	—	—	42	88	85	35
A 55 2_10.4	10.4	19	—	—	—	—	—	—	35	81	78	28
A 55 2_13.1	13.1	12	—	—	14	14	17	17	28	74	72	21
A 55 2_15.7	15.7	8.9	—	—	11	11	14	14	25	71	68	18
A 55 2_19.2	19.2	6.2	—	—	8.6	8.5	11	11	23	68	66	15
A 55 3_23.8	23.8	11	—	—	13	13	16	16	27	73	70	20
A 55 3_29.9	29.9	7.9	—	—	10	10	13	13	24	70	67	17
A 55 3_40.3	40.3	5.3	—	—	7.8	7.6	10	10	22	68	65	14
A 55 3_51.0	51.0	3.6	—	—	6.0	5.9	8.6	8.6	20	66	63	13
A 55 3_64.3	64.3	2.6	3.1	3.0	5.1	5.0	7.7	7.7	19	65	62	12
A 55 3_79.5	79.5	2.0	2.4	2.4	4.5	4.4	7.1	7.1	18	64	62	11
A 55 3_101.4	101.4	1.3	1.8	1.8	3.8	3.7	6.5	6.5	18	64	61	10
A 55 3_123.9	123.9	1.0	1.5	1.5	3.6	3.4	6.2	6.2	17	63	61	10
A 55 3_132.7	132.7	0.71	1.4	1.4	3.5	3.3	6.1	6.1	—	—	—	9.5
A 55 3_146.8	146.8	0.66	1.4	1.4	3.4	3.3	6.0	6.0	—	—	—	9.4
A 55 3_160.4	160.4	0.58	1.3	1.3	3.3	3.2	6.0	6.0	—	—	—	9.4
A 55 3_175.0	175.0	0.50	1.2	1.2	3.3	3.1	5.9	5.9	—	—	—	9.3
A 55 3_194.2	194.2	0.43	1.2	1.2	3.2	3.1	5.8	5.8	—	—	—	9.2

For the values of the moment of inertia of 4-stage gearboxes, please contact our Technical Service department.

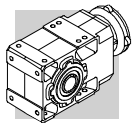

A 55

	i	J (•10-4) [kgm2]									
		SERVO									
		80B 95A		80C 95B 110A		95C 110B 130A		130B 180A		180B	
		SK	SC	SK	SC	SK	SC	SK	SC	SK	SC
A 55 2_4.9	4.9	—	—	—	—	—	—	78	80	77	82
A 55 2_6.4	6.4	—	—	—	—	—	—	58	60	57	62
A 55 2_8.5	8.5	—	—	—	—	—	—	43	45	42	47
A 55 2_10.4	10.4	—	—	—	—	—	—	36	38	35	40
A 55 2_13.1	13.1	—	—	14	15	14	15	29	31	28	33
A 55 2_15.7	15.7	—	—	11	12	11	12	26	28	25	30
A 55 2_19.2	19.2	—	—	8.6	9.1	8.5	9.5	23	26	23	28
A 55 3_23.8	23.8	—	—	13	14	13	14	28	30	27	32
A 55 3_29.9	29.9	—	—	10	11	10	11	25	27	24	29
A 55 3_40.3	40.3	—	—	7.8	8.3	7.6	8.6	22	25	22	27
A 55 3_51.0	51.0	—	—	6.0	6.5	5.9	6.9	21	23	20	25
A 55 3_64.3	64.3	5.4	5.9	5.1	5.6	5.0	6.0	20	22	19	24
A 55 3_79.5	79.5	4.8	5.3	4.5	5.0	4.4	5.4	19	21	18	23
A 55 3_101.4	101.4	4.1	4.6	3.8	4.3	3.7	4.7	18	21	18	23
A 55 3_123.9	123.9	3.8	4.3	3.6	4.1	3.4	4.4	18	20	17	22
A 55 3_132.7	132.7	3.5	4.0	3.5	4.0	3.3	4.3	—	—	—	—
A 55 3_146.8	146.8	3.5	3.9	3.4	3.9	3.3	4.3	—	—	—	—
A 55 3_160.4	160.4	3.4	3.8	3.3	3.8	3.2	4.2	—	—	—	—
A 55 3_175.0	175.0	3.3	3.8	3.3	3.8	3.1	4.1	—	—	—	—
A 55 3_194.2	194.2	3.3	3.7	3.2	3.7	3.1	4.1	—	—	—	—

For the values of the moment of inertia of 4-stage gearboxes, please contact our Technical Service department.

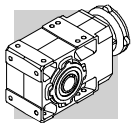

A 60

	i	J (•10-4) [kgm2]									
			IEC								
			63	71	80	90	100	112	132	160	180	
A 60 2_7.9	7.9	36	—	—	—	—	—	—	54	114	112	57
A 60 2_10.3	10.3	23	—	—	25	25	27	27	41	101	99	44
A 60 2_12.7	12.7	16	—	—	19	19	20	20	35	94	92	37
A 60 2_16.7	16.7	9.4	—	—	12	12	14	14	28	88	85	30
A 60 2_20.6	20.6	6.7	—	—	9.6	9.5	11	11	26	85	83	28
A 60 3_25.7	25.7	14	—	—	17	17	18	18	33	92	90	35
A 60 3_27.9	27.9	14	—	—	17	17	18	18	33	92	90	35
A 60 3_31.7	31.7	10	—	—	13	13	15	15	29	89	86	31
A 60 3_34.3	34.3	10	—	—	13	13	14	14	29	89	86	31
A 60 3_41.7	41.7	6.1	—	—	9.0	8.9	10	10	25	84	82	27
A 60 3_45.2	45.2	6.1	—	—	8.9	8.9	10	10	25	84	82	27
A 60 3_51.3	51.3	5.0	—	—	7.4	7.4	8.7	8.7	24	83	81	26
A 60 3_55.6	55.6	4.5	—	—	7.4	7.3	8.6	8.6	23	83	81	26
A 60 3_65.0	65.0	3.2	4.7	4.6	6.1	6.0	7.3	7.3	22	82	79	24
A 60 3_70.4	70.4	3.2	4.7	4.6	6.1	6.0	7.3	7.3	22	81	79	24
A 60 3_79.7	79.7	2.1	3.6	3.5	5.0	4.9	6.2	6.2	21	80	78	23
A 60 3_86.4	86.4	2.1	3.6	3.5	5.0	4.9	6.2	6.2	21	80	78	23
A 60 3_99.5	99.5	2.0	3.5	3.4	4.3	4.3	5.6	5.6	20	80	78	23
A 60 3_107.8	107.8	1.5	3.0	2.9	4.3	4.3	5.6	5.6	20	80	78	22
A 60 3_123.0	123.0	1.1	2.6	2.5	4.0	3.9	5.2	5.2	20	79	77	22
A 60 3_133.3	133.3	1.1	2.6	2.5	3.9	3.9	5.2	5.2	20	79	77	22
A 60 3_144.0	144.0	0.80	2.3	2.2	3.7	3.6	5.0	5.0	—	—	—	22
A 60 3_156.0	156.0	0.80	2.3	2.2	3.7	3.6	5.0	5.0	—	—	—	22
A 60 3_171.5	171.5	0.60	2.1	2.0	3.5	3.4	4.7	4.7	—	—	—	22
A 60 3_185.8	185.8	0.60	2.1	2.0	3.5	3.4	4.7	4.7	—	—	—	22

For the values of the moment of inertia of 4-stage gearboxes, please contact our Technical Service department.

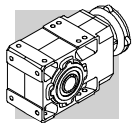

A 60

	i	J (•10-4) [kgm2]									
		SERVO									
		95A		80C 95B 110A		95C 110B 130A		130B 180A		180B	
		SK	SC	SK	SC	SK	SC	SK	SC	SK	SC
A 60 2_7.9	7.9	—	—	—	—	—	—	53	55	54	59
A 60 2_10.3	10.3	—	—	25	26	25	26	40	42	41	46
A 60 2_12.7	12.7	—	—	19	20	19	20	33	35	35	40
A 60 2_16.7	16.7	—	—	12	13	12	13	26	29	28	33
A 60 2_20.6	20.6	—	—	9.6	10	9.5	10	24	26	26	31
A 60 3_25.7	25.7	—	—	17	18	17	18	31	33	33	38
A 60 3_27.9	27.9	—	—	17	18	17	18	31	33	33	38
A 60 3_31.7	31.7	—	—	13	14	13	14	27	29	29	34
A 60 3_34.3	34.3	—	—	13	14	13	14	27	29	29	34
A 60 3_41.7	41.7	—	—	9.0	9.5	8.9	9.9	23	26	25	30
A 60 3_45.2	45.2	—	—	8.9	9.4	8.9	9.9	23	26	25	30
A 60 3_51.3	51.3	—	—	7.4	7.9	7.4	8.4	22	24	24	29
A 60 3_55.6	55.6	—	—	7.4	7.9	7.3	8.3	21	24	23	28
A 60 3_65.0	65.0	6.0	6.5	6.1	6.6	6.0	7.0	20	23	22	27
A 60 3_70.4	70.4	6.0	6.5	6.1	6.6	6.0	7.0	20	23	22	27
A 60 3_79.7	79.7	4.9	5.4	5.0	5.5	4.9	5.9	19	22	21	26
A 60 3_86.4	86.4	4.9	5.4	5.0	5.5	4.9	5.9	19	22	21	26
A 60 3_99.5	99.5	4.8	5.3	4.3	4.8	4.3	5.3	19	21	20	25
A 60 3_107.8	107.8	4.3	4.8	4.3	4.8	4.3	5.3	18	21	20	25
A 60 3_123.0	123.0	3.9	4.4	4.0	4.5	3.9	4.9	18	21	20	25
A 60 3_133.3	133.3	3.9	4.4	3.9	4.4	3.9	4.9	18	21	20	25
A 60 3_144.0	144.0	3.6	4.1	3.7	4.2	3.6	4.6	—	—	—	—
A 60 3_156.0	156.0	3.6	4.1	3.7	4.2	3.6	4.6	—	—	—	—
A 60 3_171.5	171.5	3.4	3.9	3.5	4.0	3.4	4.4	—	—	—	—
A 60 3_185.8	185.8	3.4	3.9	3.5	4.0	3.4	4.4	—	—	—	—

For the values of the moment of inertia of 4-stage gearboxes, please contact our Technical Service department.

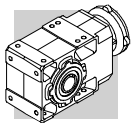

A 70

	i	J (•10-4) [kgm2]											
			IEC										
			80	90	100	112	132	160	180	200	225	250	
A 70 3_9.4	9.4	—	—	—	—	—	—	187	185	194	—	—	150
A 70 3_10.2	10.2	—	—	—	—	—	—	183	180	190	—	—	146
A 70 3_12.1	12.1	—	—	—	—	—	—	150	148	157	—	—	113
A 70 3_13.1	13.1	—	—	—	—	—	—	147	145	154	—	—	111
A 70 3_15.4	15.4	45	—	—	—	—	64	124	121	161	—	—	87
A 70 3_16.7	16.7	44	—	—	—	—	63	122	120	129	—	—	85
A 70 3_19.7	19.7	30	—	—	—	—	49	109	107	—	—	—	72
A 70 3_21.3	21.3	29	—	—	—	—	48	108	106	—	—	—	71
A 70 3_23.5	23.5	—	—	—	—	—	—	116	114	123	—	—	79
A 70 3_27.8	27.8	—	—	—	—	—	—	118	116	125	—	—	81
A 70 3_30.1	30.1	—	—	—	—	—	—	117	115	124	—	—	81
A 70 3_35.4	35.4	26	—	—	—	—	45	104	102	111	—	—	67
A 70 3_38.4	38.4	25	—	—	—	—	44	104	101	111	—	—	67
A 70 3_45.2	45.2	18	—	—	—	—	37	97	94	—	—	—	59
A 70 3_49.0	49.0	18	—	—	—	—	37	96	94	—	—	—	59
A 70 3_53.2	53.2	15	—	—	—	—	34	93	91	—	—	—	56
A 70 3_57.7	57.7	15	—	—	—	—	34	93	91	—	—	—	56
A 70 3_66.9	66.9	9.7	12	12	13	13	29	88	86	—	—	—	51
A 70 3_72.5	72.5	9.6	12	12	13	13	28	88	86	—	—	—	51
A 70 3_79.3	79.3	6.8	9.4	9.3	11	11	26	85	83	—	—	—	48
A 70 3_85.9	85.9	6.7	9.3	9.3	11	11	26	85	83	—	—	—	48
A 70 3_96.2	96.2	5.4	8.2	8.2	9.4	9.4	24	84	82	—	—	—	47
A 70 3_104.2	104.2	5.4	8.2	8.1	9.4	9.4	24	84	81	—	—	—	47
A 70 3_120.6	120.6	3.4	6.2	6.2	7.5	7.5	22	82	79	—	—	—	45
A 70 3_130.7	130.7	3.4	6.2	6.2	7.4	7.4	22	82	79	—	—	—	45
A 70 3_141.9	141.9	2.4	5.3	5.2	6.5	6.5	21	81	78	—	—	—	44
A 70 3_153.7	153.7	2.4	5.2	5.2	6.5	6.5	21	81	78	—	—	—	44

For the values of the moment of inertia of 4-stage gearboxes, please contact our Technical Service department.

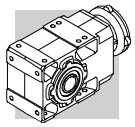

A 80

	i	J (•10-4) [kgm2]											
			IEC										
			80	90	100	112	132	160	180	200	225	250	
A 80 3_9.8	9.8	—	—	—	—	—	—	—	320	333	611	—	286
A 80 3_10.7	10.7	—	—	—	—	—	—	—	309	323	601	—	276
A 80 3_12.3	12.3	—	—	—	—	—	—	239	239	253	531	—	205
A 80 3_13.3	13.3	—	—	—	—	—	—	232	233	246	524	—	199
A 80 3_15.5	15.5	—	—	—	—	—	—	187	185	194	478	—	150
A 80 3_16.7	16.7	—	—	—	—	—	—	183	180	190	474	—	150
A 80 3_19.3	19.3	69	—	—	—	—	88	147	145	154	440	—	111
A 80 3_20.9	20.9	66	—	—	—	—	85	145	142	152	437	—	108
A 80 3_22.6	22.6	—	—	—	—	—	—	—	205	219	496	—	171
A 80 3_24.5	24.5	—	—	—	—	—	—	—	203	217	494	—	169
A 80 3_28.2	28.2	—	—	—	—	—	—	165	166	179	457	—	132
A 80 3_30.6	30.6	—	—	—	—	—	—	164	164	178	456	—	130
A 80 3_35.5	35.5	—	—	—	—	—	—	140	138	147	432	—	104
A 80 3_38.5	38.5	—	—	—	—	—	—	140	137	147	431	—	103
A 80 3_44.5	44.5	39	—	—	—	—	58	118	115	125	410	—	81
A 80 3_48.2	48.2	39	—	—	—	—	58	117	115	124	410	—	90
A 80 3_55.2	55.2	29	—	—	—	—	48	108	105	136	399	—	70
A 80 3_59.8	59.8	29	—	—	—	—	48	107	105	136	399	—	70
A 80 3_66.8	66.8	22	—	—	—	—	41	101	98	128	391	—	63
A 80 3_72.4	72.4	22	—	—	—	—	41	100	98	128	391	—	63
A 80 3_82.3	82.3	15	17	17	18	18	34	94	91	120	384	—	56
A 80 3_89.2	89.2	15	17	17	18	18	34	93	91	120	386	—	56
A 80 3_96.0	96.0	14	16	16	17	17	32	92	90	119	382	—	55
A 80 3_104.0	104.0	13	16	16	17	17	32	92	89	119	382	—	55
A 80 3_116.0	116.0	9.1	12	12	13	13	28	87	85	—	—	—	50
A 80 3_125.6	125.6	9.1	12	12	13	13	28	87	85	—	—	—	50
A 80 3_144.7	144.7	5.4	8.3	8.2	10	10	24	84	82	—	—	—	47
A 80 3_156.8	156.8	5.4	3.0	2.9	4.2	4.2	19	78	76	—	—	—	41

For the values of the moment of inertia of 4-stage gearboxes, please contact our Technical Service department.

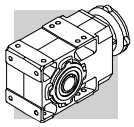

A 90

	i	J (•10-4) [kgm2]											
			IEC										
			80	90	100	112	132	160	180	200	225	250	
A 90 3_9.7	9.7	—	—	—	—	—	—	—	597	611	889	918	898
A 90 3_10.5	10.5	—	—	—	—	—	—	—	575	589	867	896	876
A 90 3_12.6	12.6	—	—	—	—	—	—	—	402	416	693	723	703
A 90 3_13.7	13.7	—	—	—	—	—	—	—	389	403	681	710	690
A 90 3_15.6	15.6	—	—	—	—	—	—	—	306	319	597	627	607
A 90 3_16.9	16.9	—	—	—	—	—	—	—	297	311	589	618	598
A 90 3_19.4	19.4	—	—	—	—	—	—	236	234	243	527	559	530
A 90 3_21.0	21.0	—	—	—	—	—	—	231	228	238	522	553	524
A 90 3_22.3	22.3	—	—	—	—	—	—	—	326	340	618	647	627
A 90 3_24.1	24.1	—	—	—	—	—	—	—	322	336	614	643	623
A 90 3_29.1	29.1	—	—	—	—	—	—	—	243	257	535	564	544
A 90 3_31.5	31.5	—	—	—	—	—	—	—	241	254	532	562	542
A 90 3_35.8	35.8	—	—	—	—	—	—	—	201	215	493	522	502
A 90 3_38.8	38.8	—	—	—	—	—	—	—	200	213	491	521	500
A 90 3_44.6	44.6	—	—	—	—	—	—	169	166	176	460	491	462
A 90 3_48.3	48.3	—	—	—	—	—	—	168	165	175	459	490	461
A 90 3_55.0	55.0	66	—	—	—	—	85	144	142	151	437	468	438
A 90 3_59.6	59.6	66	—	—	—	—	84	144	141	151	436	468	437
A 90 3_68.8	68.8	48	—	—	—	—	67	126	124	154	418	449	416
A 90 3_74.5	74.5	47	—	—	—	—	66	126	123	154	417	449	416
A 90 3_80.4	80.4	43	—	—	—	—	62	121	119	149	412	443	412
A 90 3_87.1	87.1	43	—	—	—	—	62	121	119	148	412	443	412
A 90 3_98.6	98.6	28	30	30	32	32	47	106	104	134	397	428	399
A 90 3_106.8	106.8	28	30	30	31	31	47	106	104	133	397	428	399
A 90 3_116.9	116.9	23	25	25	26	26	41	101	99	128	391	423	394
A 90 3_126.6	126.6	22	25	25	26	26	41	101	98	128	391	422	394
A 90 3_139.4	139.4	15	17	17	19	19	33	93	91	—	—	—	386
A 90 3_151.0	151.0	14	3.0	3.0	4.3	4.3	19	79	76	—	—	—	372

For the values of the moment of inertia of 4-stage gearboxes, please contact our Technical Service department.

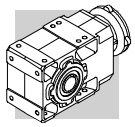

42 EXACT RATIOS

i_N	A 05	A 10	A 20	A 30	A 35	A 41	A 50	A 55	A 60	A 70	A 80	A 90
5.0								4.94505				
5.6	5.46559	5.46559	5.35117	5.41311	5.41311	5.24476						
6.3	6.33484	6.33484	6.53846	6.41026	6.41026			6.41026				
7.1	7.21154	7.21154	7.28745	7.02341	7.02341	7.12251						
8.0	8.51648	8.51648	8.37104	8.46154	8.46154	8.33333	7.73684	8.46154	7.86420			
9.0	9.61538	9.61538	9.37500	9.31174	9.31174	9.19732				9.43946		9.67545
10.0	10.55639	10.55639	10.33540	10.45503	10.63348	10.12987	9.73401	10.35503	10.31579	10.22609	9.83278	10.48174
11.2				11.77885	11.77885	11.74089				12.08027	10.65217	12.64214
12.5	12.30769	12.30769	11.96581		13.06878		13.10700	13.07692	12.70370	13.08696	12.27130	13.69565
14.0	13.92857	13.92857	14.07519	13.56522	15.47619	13.75661				15.40468	13.29391	15.57512
16.0	16.44898	16.44898	16.16807	16.34286	16.95652	16.09524	16.57005	15.68047	16.73663	16.68841	15.45151	16.87304
18.0	18.57143	18.57143	18.10714	17.98496		17.76398					19.33779	19.38462
20.0	21.35714	21.35714	21.22449	20.53782	20.42857		20.91813	19.23077	20.5942	19.66555	20.94928	21.00000
22.4	23.77143	23.77143	23.11111	22.75000	22.48120	22.67669				21.30435	22.61538	22.25354
25.0	25.46939	25.46939	26.46429	26.53061	25.67227		24.04795	23.79021	25.71012	23.52000	24.50000	24.10800
28.0	28.57143	28.57143	29.21905	29.30159	28.43750	28.32143	26.43733		27.85263	27.78462	28.22400	29.07692
31.5	32.19048	32.19048	31.30612	33.42857	33.16327		32.38095	29.93134	31.66154	30.10000	30.57600	31.50000
35.5	35.11688	35.11688	35.42857	36.64762	36.62698	35.90476	35.59829		34.30000	35.43077	35.53846	35.82277
40.0	40.85714	40.85714	39.61905	39.26531	41.78571	45.06667	40.93645	40.30303	41.71282	38.38333	38.50000	38.80800
45.0	45.39683	45.39683	43.22078	43.42857	45.80952	48.28571	45.00386		45.18889	45.23077	44.47692	44.58462
50.0	51.25714	51.25714	48.28571	48.28571	49.08163	53.14286	51.67843	50.95166	51.32709	49.00000	48.18333	48.30000
56.0	58.60317	58.60317	53.65079	52.67532	54.28571	58.80952	56.81314		55.60435	53.23314	55.18154	55.03077
63.0	65.92857	65.92857	63.14286	59.42857	60.35714	64.15584	63.89011	64.32168	64.98947	66.94154	66.80237	59.61667
71.0			70.98413	66.03175	65.84416	71.31429	70.23817		70.40526	72.52000	72.36923	68.75077
80.0	76.40816	76.40816	79.85714	76.51429	74.28571	79.23810	81.45055	79.52098	79.71923	79.32781	82.32000	80.37160
90.0	91.61905	91.61905	92.32653	86.66667	82.53968	92.76828	89.54339		86.36250	85.93846	89.18000	87.06923
100.0				97.50000	95.64286		99.53407	101.37762	99.50769	96.21818	104.03077	98.60308
112.2			109.16518	109.07029	105.54155	115.86039	109.42367	123.88531	107.80000	104.23636	115.95524	116.90414
125.0			120.52857	120.46208	116.90972		129.67046	132.73427	123.02769	120.61538	125.61818	126.64615
140.0			146.14286	137.42857	136.33787	146.88312	140.61938	146.80796	144.04260	141.86014	144.73846	139.39301
160.0			163.42857	161.42404	150.57760		154.59118	160.43706	171.46573	169.75499	156.80000	166.12694
180.0			178.28571	178.53968	171.78571	184.36364	173.36264	175.02225	185.75455	183.90123	171.29752	179.97085
200.0			199.17857	198.50794	201.78005	197.53247	190.58777	194.19860	208.73017		214.73193	209.01044
225.0			221.30952	216.55411	223.17460	217.40260	231.98700	208.05260	226.12435	220.25418	232.62626	226.42797
250.0			260.46429	244.31746	248.13492	240.58442	260.88462		264.29053	238.60870		
280.0			292.80952	271.46384	270.69264	291.74026	286.80584	262.64685	286.31474	292.01619	277.28428	281.43590
315.0			329.41071	314.55873	305.39683	324.15584	332.58974		324.19154	316.35088	300.39130	304.88889
355.0				356.29630	339.32981	376.83117	365.63552	324.71066	351.20750	369.38462	353.96864	355.79521
400.0			380.84694	400.83333	393.19841		406.43077		404.66462	400.16667	383.46603	385.44482
450.0							446.81331	413.95862	438.38667	475.76068	442.07937	449.15802
500.0							481.63314	505.86503	500.31262	515.40741	478.91932	486.58785
560.0							574.19580	541.99825	585.77325	595.03590	560.45035	555.29467
630.0							631.24731	655.11801	634.58769	644.62222	607.15455	601.56923
710.0							707.89744	714.67419	697.29399	705.13609	703.46182	707.91953
800.0							778.23340	792.97762	755.40182	855.27273	829.52598	766.91282
900.0										926.54545	898.65315	865.09065
1000.0										1072.13675	1001.43166	1025.1594
1125.0										1161.48148	1084.88430	1110.58935
1250.0										1242.33846	1236.85594	1222.17967
1400.0										1345.86667	1339.92727	1324.02797
1600.0										1583.07692	1557.66545	1506.76450
1800.0										1715.00000		1632.32821

2x 3x 4x

43 DIMENSIONS

A 05...M/ME/MX/MXN

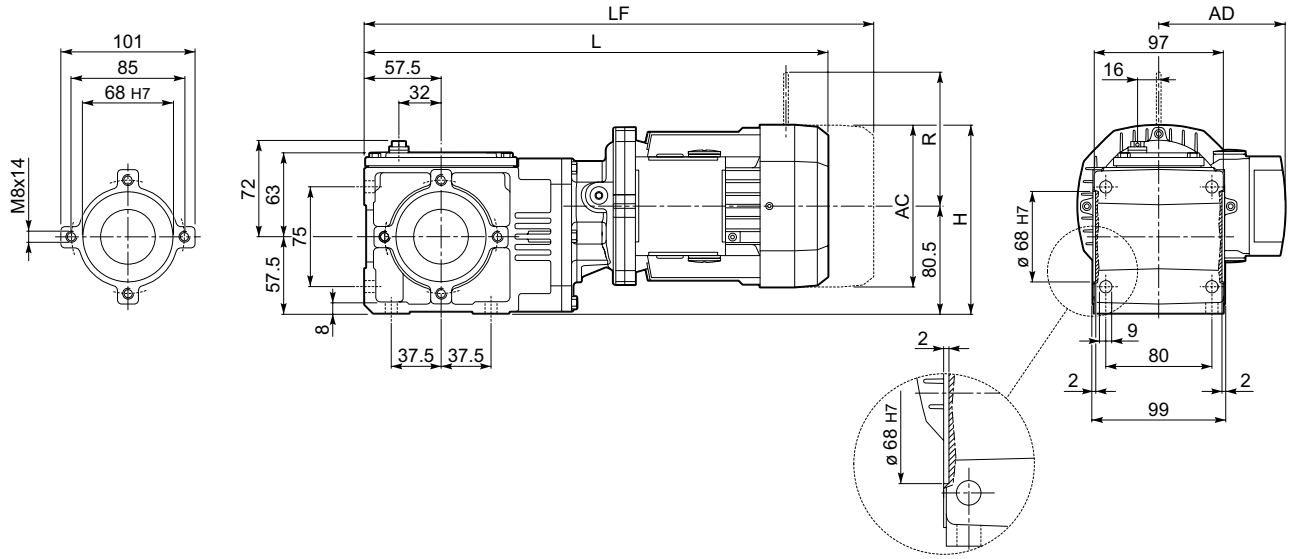

			Gearmotor - Without brake						Gearmotor - With brake									
									M...FD				M...FDD					
			AC	H	L		AD	Kg	LF	Kg	R	AD	LF		Kg	R	AD	
					plastic	metal							plastic	metal				
A 05 2	S05	M05	121	141	—	360.5	95	7.5	426.5	9	96	122	—	—	—	—	—	
		ME05	121	141	—	360.5	95	7.5	426.5	9	96	119	—	—	—	—	—	
		MX05	121	141	—	360.5	95	7.5	426.5	9	96	119	—	—	—	—	—	
	SX05	MXN05	123	142	407	385	122.3	9.3	—	—	—	—	434	399.7	10.4	106	136	
	S1	M1	138	149.5	—	389.5	108	11.5	450.5	14	103	135	—	—	—	—	—	
		ME1	138	149.5	—	389.5	108	11.5	450.5	14	103	135	—	—	—	—	—	
		MX1	138	149.5	—	389.5	108	11.5	450.5	14	103	135	—	—	—	—	—	
	S2	ME2S	156	158.5	—	418.5	119	15.5	488.5	17.1	129	143	—	—	—	—	—	
		MX2S	156	158.5	—	452.5	119	20.6	524.5	24.4	129	143	—	—	—	—	—	

A 05...P(IEC)

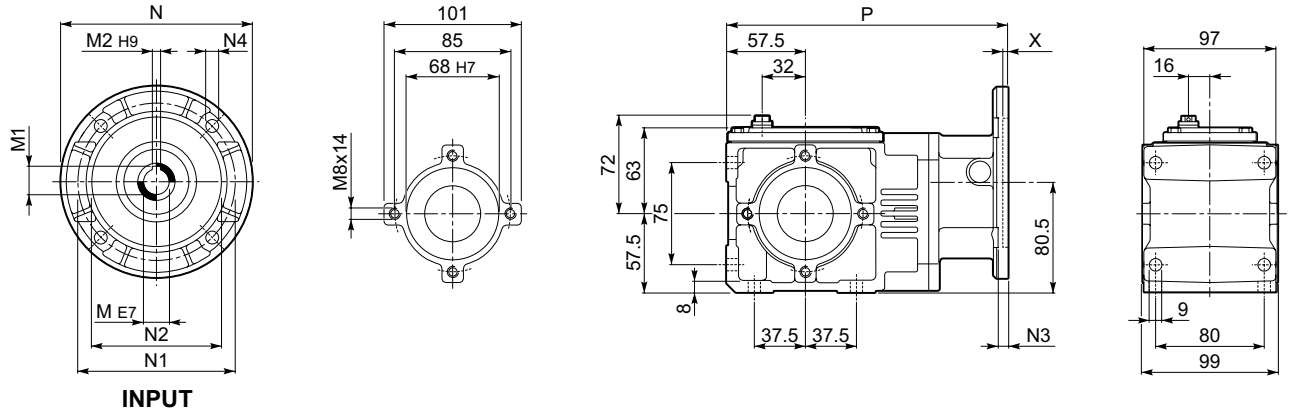

		M	M1	M2	N	N1	N2	N3	N4	X	P	Kg
A 05 2	P63	11	12.8	4	140	115	95	7	9.5	3.5	206	5
A 05 2	P71	14	16.3	5	160	130	110	7	9.5	4	213	5
A 05 2	P80	19	20.8#	6	200	165	130	7	11.5	4	223	5.5

Lowered key of Bonfiglioli supply

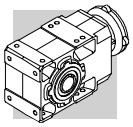

A 05...SK / SC / S

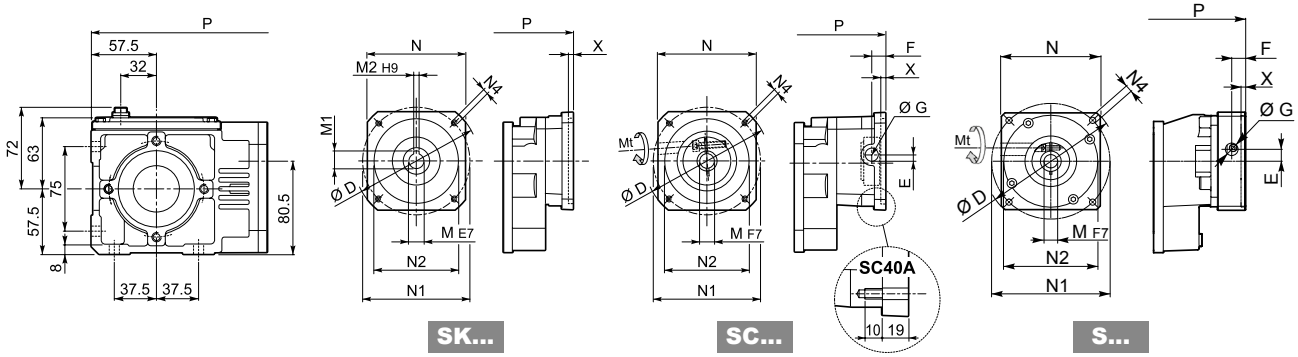

		D	M	M1	M2	N	N1	N2	N4	X	P	Kg
A 05 2	**SK40A**	74	9	10.4	3	55	63	40	M5x10	3	207.5	5
A 05 2	**SK60A**	102	11	12.8	4	82	75	60	M5x10	3.5	206	5
A 05 2	**SK60B**	102	14	16.3	5	82	75	60	M5x10	4	213	5
A 05 2	**SK80A**	115	14	16.3	5	90	100	80	M6x12	4	213	5

			Mt [Nm]	D	E	F	G	M	N	N1	N2	N4	X	P	Kg
A 05 2	**SC40A**	M5	15	74	10.5	9.5	12.5	9	55	63	40	M5x10	3	226.5	6
A 05 2	**SC60A**	M6	15	102	7	12.5	12.5	11	82	75	60	M5x10	4	233	6
A 05 2	**SC60B**	M6	15	102	7	12.5	12.5	14	82	75	60	M5x10	4	233	6
A 05 2	**SC80A**	M6	15	115	6	12.5	12.5	14	90	100	80	M6x12	4	233	6

			Mt [Nm]	D	E	F	G	M	N	N1	N2	N4	X	P	Kg
A 05 2	**5S9F40B1**	M6	11	108	15.1	10.5	13.75	9	80	63	40	M4x12	4	235.7	6
A 05 2	**S11F40B1**	M6	11	108	15.1	10.5	13.75	11	80	63	40	M4x12	4	235.7	6
A 05 2	**S11F50C1**	M6	11	90	15.1	13.75	13.75	11	80	70	50	M4x10	4	235.7	6
A 05 2	**S14F40B1**	M6	11	108	15.1	10.5	13.75	14	80	63	40	M4x12	4	235.7	6
A 05 2	**S14F50C1**	M6	11	90	15.1	13.75	13.75	14	80	70	50	M4x10	4	235.7	6
A 05 2	**S11F60A2**	M6	11	108	15.1	13.75	13.75	11	80	75	60	M5x16	4	235.7	6
A 05 2	**S14F60A2**	M6	11	108	13.75	15.1	13.75	14	80	75	60	M5x16	4	235.7	6
A 05 2	**S14F80A1**	M6	11	120	13.75	15.1	13.75	14	90	100	80	M6x16	4	235.7	6
A 05 2	**S19F80A1**	M6	11	120	13.75	15.1	13.75	19	90	100	80	M6x16	4	235.7	6

A 05...F...

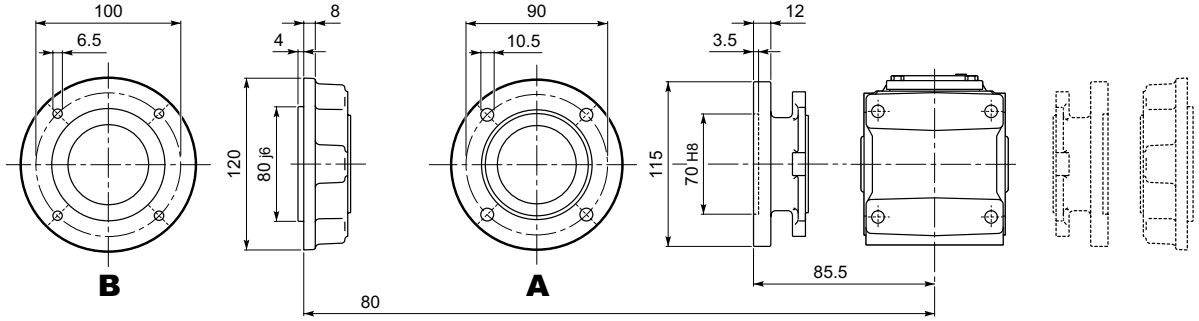

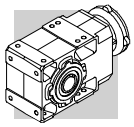

A 05

A 05...UR

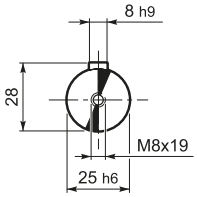

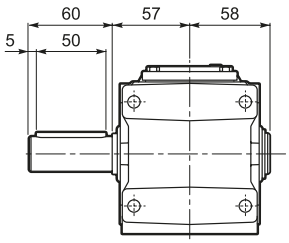

A 05...UD

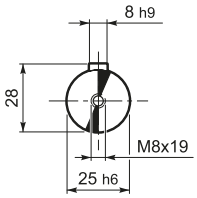

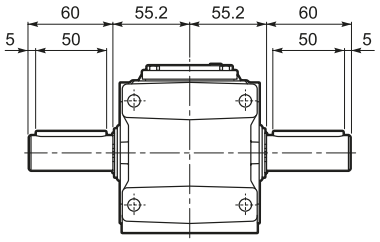

A 05...UH

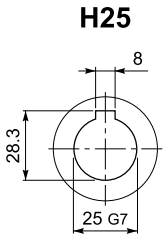

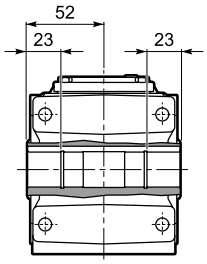

A 05...US

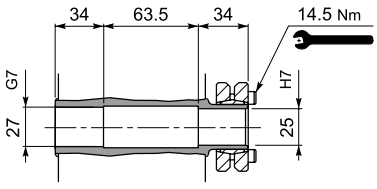

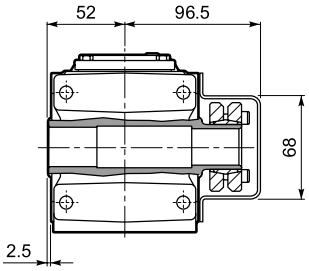

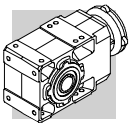

A 10...M/ME/MX/MXN

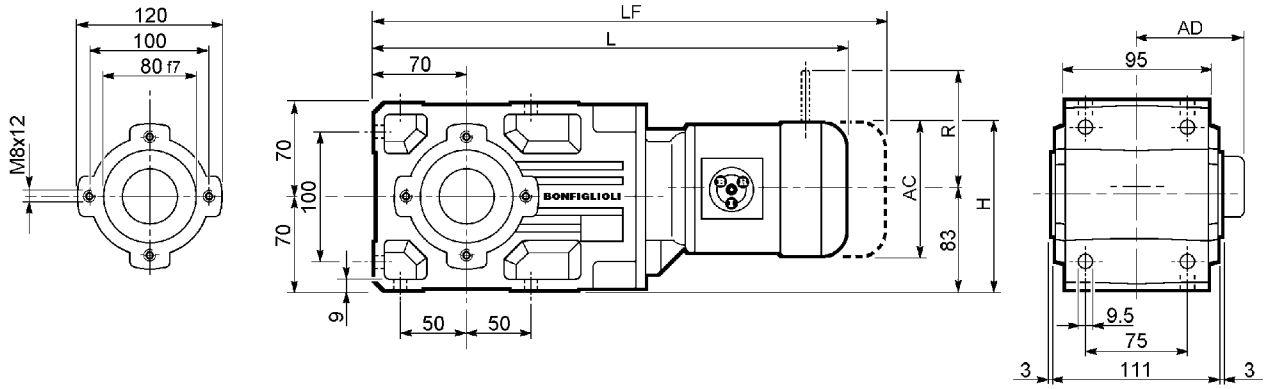

			Gearmotor - Without brake						Gearmotor - With brake								
									M...FD				M...FDD				
			AC	H	L		AD	Kg	LF	Kg	R	AD	LF		Kg	R	AD
					plastic	metal							plastic	metal			
A 10 2	S05	M05	121	143.5	—	408.5	95	12	474.5	14	96	122	—	—	—	—	—
		ME05	121	143.5	—	408.5	95	12	474.5	14	96	119	—	—	—	—	—
		MX05	121	143.5	—	408.5	95	12	474.5	14	96	119	—	—	—	—	—
	SX05	MXN05	123	144.5	455	433	122.3	13.8	—	—	—	—	482	447.7	14.9	106	136
	S1	M1	138	152	—	437.5	108	14	498.5	17	103	135	—	—	—	—	—
		ME1	138	152	—	437.5	108	14	498.5	17	103	135	—	—	—	—	—
		MX1	138	152	—	437.5	108	14	498.5	17	103	135	—	—	—	—	—
	SX10	MXN10	138	152	466.5	447	123.3	16.4	—	—	—	—	502.5	467.6	18.8	106	138
	S2	ME2S	156	161	—	466.5	119	18	536.5	20.1	129	143	—	—	—	—	—
		MX2S	156	161	—	510.5	119	23.1	568	27.3	129	143	—	—	—	—	—
	SX20	MXN20	158	162	564	547.7	132.8	25.3	—	—	—	—	605	566.8	27.7	115	148
	S3	ME3S	195	180.5	—	509.5	142	24.5	605.5	30.5	160	155	—	—	—	—	—
		MX3S	195	180.5	—	541.5	142	27.5	631.5	34.5	160	155	—	—	—	—	—
		ME3L	195	180.5	—	541.5	142	30	632.5	32.6	160	155	—	—	—	—	—
		MX3L	195	180.5	—	585.5	142	36	677.5	43.4	160	155	—	—	—	—	—

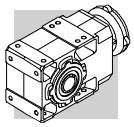

A 10...P(IEC)

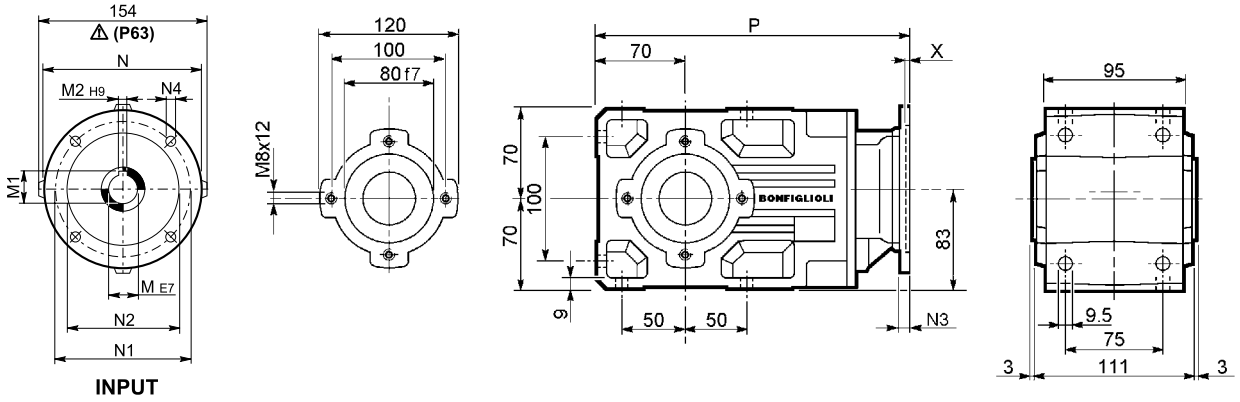

		M	M1	M2	N	N1	N2	N3	N4	X	P	Kg
A 10 2	**P63**	11	12.8	4	140	115	95	—	M8x10	4	282.5	8
A 10 2	**P71**	14	16.3	5	160	130	110	—	M8x10	4.5	282.5	9
A 10 2	**P80**	19	21.8	6	200	165	130	—	M10x14.5	4	302	9
A 10 2	**P90**	24	27.3	8	200	165	130	—	M10x14.5	4	302	9
A 10 2	**P100**	28	31.3	8	250	215	180	—	M12x16	4.5	312	13
A 10 2	**P112**	28	31.3	8	250	215	180	—	M12x16	4.5	312	13

A 10...HS

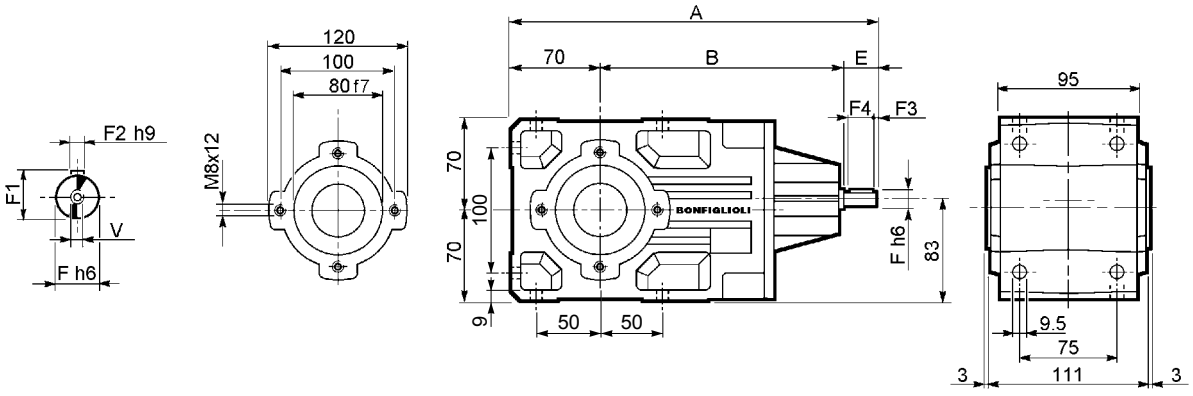

		A	B	E	F	F1	F2	F3	F4	V	Kg
A 10 2	**HS**	289.5	179.5	40	16	18	5	2.5	35	M6x16	7.8

A 10...SK / SC / S

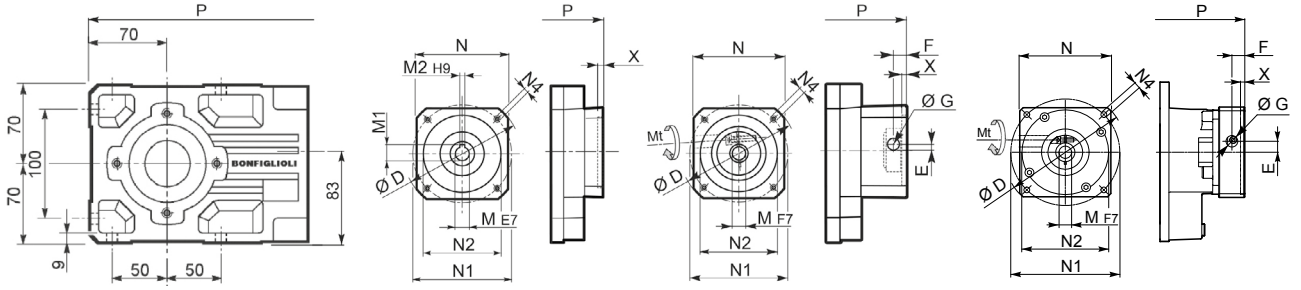

		D	M	M1	M2	N	N1	N2	N4	X	P	Kg
A 10 2	**SK60A**	102	11	12.8	4	82	75	60	M5x10	3.5	254	8
A 10 2	**SK60B**	102	14	16.3	5	82	75	60	M5x10	4	261	8
A 10 2	**SK80A**	115	14	16.3	5	90	100	80	M6x12	4	261	8
A 10 2	**SK80C**	120	19	21.8	6	96	100	80	M6x12	4	302	9
A 10 2	**SK95A**	130	14	16.3	5	102	115	95	M8x12	4	302	9
A 10 2	**SK95B**	130	19	21.8	6	102	115	95	M8x12	4	302	9
A 10 2	**SK95C**	130	24	27.3	8	102	115	95	M8x12	4	302	9
A 10 2	**SK110A**	150	19	21.8	6	120	130	110	M8x12	5	302	9
A 10 2	**SK110B**	150	24	27.3	8	120	130	110	M8x12	5	302	9

			Mt [Nm]	D	E	F	G	M	N	N1	N2	N4	X	P	Kg
A 10 2	**SC60A**	M6	15	102	7	12.5	12.5	11	82	75	60	M5x10	4	281	9
A 10 2	**SC60B**	M6	15	102	7	12.5	12.5	14	82	75	60	M5x10	4	281	9
A 10 2	**SC80A**	M6	15	115	6	12.5	12.5	14	90	100	80	M6x12	4	281	9
A 10 2	**SC80C**	M6	15	120	15.5	14.5	17.75	19	96	100	80	M6x12	4	325.5	10
A 10 2	**SC95A**	M6	15	130	16.5	15	17.75	14	102	115	95	M8x16	4	325.5	10
A 10 2	**SC95B**	M6	15	130	16.5	15	17.75	19	102	115	95	M8x16	4	325.5	10
A 10 2	**SC95C**	M6	15	130	16.5	15	17.75	24	102	115	95	M8x16	4	325.5	10
A 10 2	**SC110A**	M6	15	150	16.5	16	17.75	19	120	130	110	M8x16	5	325.5	12
A 10 2	**SC110B**	M6	15	150	16.5	16	17.75	24	120	130	110	M8x16	5	325.5	12

			Mt [Nm]	D	E	F	G	M	N	N1	N2	N4	X	P	Kg
A 10 2	**S11F60A2**	M6	11	135	16.3	15.5	13.75	11	100	75	60	M5x14	6.5	327.5	10
A 10 2	**S14F60A2**	M6	11	135	15.5	16.3	13.75	14	100	75	60	M5x14	6.5	327.5	10
A 10 2	**S14F80A1**	M6	11	135	15.5	16.3	13.75	14	100	100	80	M6x16	6.5	327.5	10
A 10 2	**S19F80A1**	M6	11	135	15.5	16.3	13.75	19	100	100	80	M6x16	6.5	327.5	10
A 10 2	**S16F80A1**	M6	11	135	15.5	16.3	17.75	16	100	100	80	M6x16	6.5	327.5	10
A 10 2	**S19F70B1**	M6	11	135	15.5	16.3	17.75	19	100	90	70	M5x12	6.5	327.5	10
A 10 2	**S19F95A**	M6	11	135	15.5	16.3	17.75	19	100	115	95	M8x18	6.5	327.5	10
A 10 2	**S24F110A**	M6	14	155	15.5	16.3	17.75	24	115	130	110	M8x18	6.5	327.5	10
A 10 2	**S24F95A**	M6	14	135	15.5	16.3	17.75	24	100	115	95	M8x18	6.5	327.5	10

A 10...F...

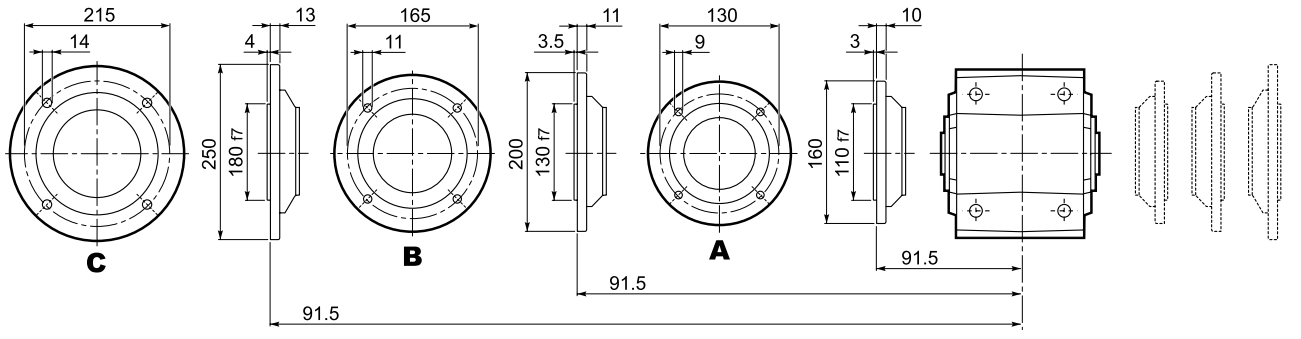

A 10

A 10...UR

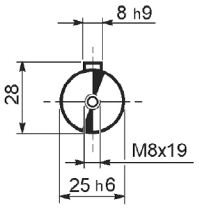

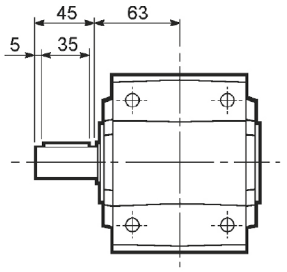

A 10...UD

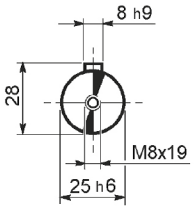

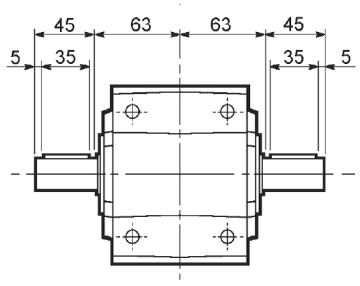

A 10...UH

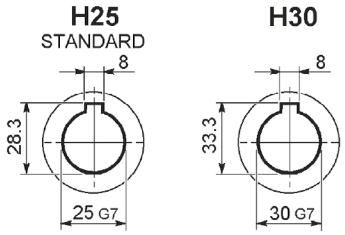

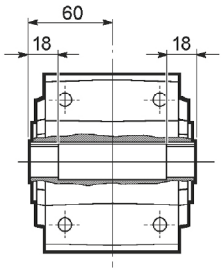

A 10...US

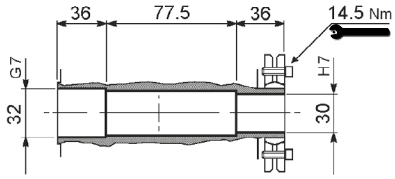

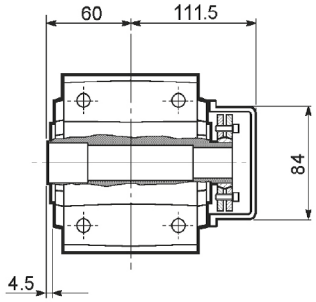

A10...QF

	Ø
QF25	25
QF30	30

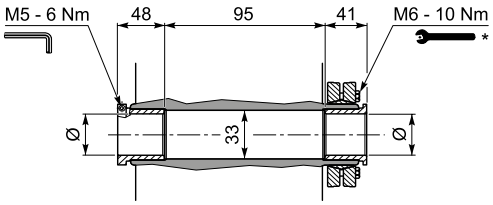

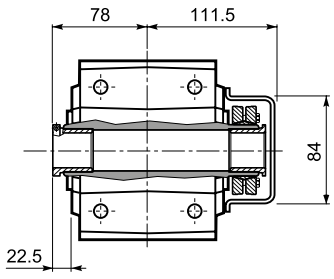

* Follow the MOUNTING INSTRUCTIONS supplied with the gearbox.

A 20...M/ME/MX/MXN

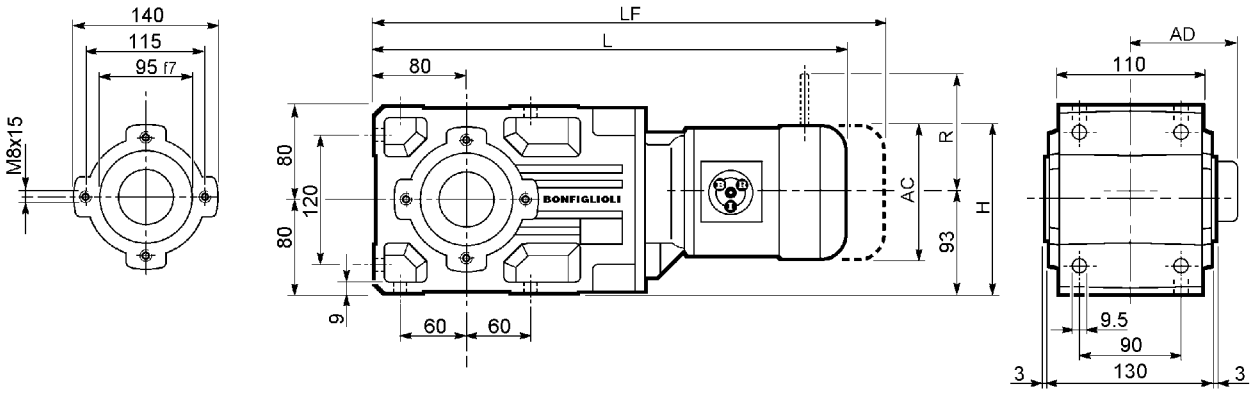

			Gearmotor - Without brake						Gearmotor - With brake								
									M...FD				M...FDD				
			AC	H	L		AD	Kg	LF	Kg	R	AD	LF		Kg	R	AD
					plastic	metal							plastic	metal			
A 20 2	S05	M05	121	143.5	—	432	95	16	498	18	96	122	—	—	—	—	—
		ME05	121	143.5	—	432	95	16	498	18	96	119	—	—	—	—	—
		MX05	121	143.5	—	432	95	16	498	18	96	119	—	—	—	—	—
	SX05	MXN05	123	144.5	478.5	456.5	122.3	17.8	—	—	—	—	505.5	471.2	18.9	106	136
	S1	M1	138	152	—	461	108	18	522	21	103	135	—	—	—	—	—
		ME1	138	152	—	461	108	18	522	21	103	135	—	—	—	—	—
		MX1	138	152	—	461	108	18	522	21	103	135	—	—	—	—	—
	SX10	MXN10	138	152	490	470.5	123.3	20.4	—	—	—	—	526	491.1	22.8	106	138
	S2	ME2S	156	161	—	490	119	22	560	24.1	129	143	—	—	—	—	—
		MX2S	156	161	—	534	119	27.1	606	31.3	129	143	—	—	—	—	—
	SX20	MXN20	158	162	487.5	471.2	132.8	29.3	—	—	—	—	528.5	490.3	31.5	115	148
	S3	ME3S	195	180.5	—	533	142	28.5	629	34.5	160	155	—	—	—	—	—
		MX3S	195	180.5	—	565	142	31.5	655	38.5	160	155	—	—	—	—	—
		ME3L	195	180.5	—	565	142	34	656	40	160	155	—	—	—	—	—
		MX3L	195	180.5	—	609	142	40	701	47	160	155	—	—	—	—	—
A 20 3	S05	M05	121	143.5	—	457.5	95	16	553.5	18	96	122	—	—	—	—	—
		ME05	121	143.5	—	457.5	95	16	553.5	18	96	119	—	—	—	—	—
		MX05	121	143.5	—	457.5	95	16	553.5	18	96	119	—	—	—	—	—
	SX05	MXN05	123	144.5	504	482	122.3	17.8	—	—	—	—	531	496.7	18.9	106	136
	S1	M1	138	152	—	486.5	108	19	577.5	21	103	135	—	—	—	—	—
		ME1	138	152	—	486.5	108	19	577.5	21	103	135	—	—	—	—	—
		MX1	138	152	—	486.5	108	19	577.5	21	103	135	—	—	—	—	—
	SX10	MXN10	138	152	515.5	496	123.3	21.4	—	—	—	—	551.5	516.6	23.8	106	138
	S2	ME2S	156	161	—	545.5	119	23	615.5	24.6	129	143	—	—	—	—	—
		MX2S	156	161	—	589.5	119	28.1	661.5	31.9	129	143	—	—	—	—	—
	SX20	MXN20	158	162	643	626.7	132.8	30.3	—	—	—	—	684	645.8	32.5	115	148
	S3	ME3S	195	180.5	—	588.5	142	29.5	684.5	35.5	160	155	—	—	—	—	—
		MX3S	195	180.5	—	620.5	142	32.5	710.5	39.5	160	155	—	—	—	—	—
		ME3L	195	180.5	—	620.5	142	35	711.5	41	160	155	—	—	—	—	—
		MX3L	195	180.5	—	664.5	142	41	756.5	48	160	155	—	—	—	—	—

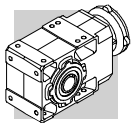

A 20...P(IEC)

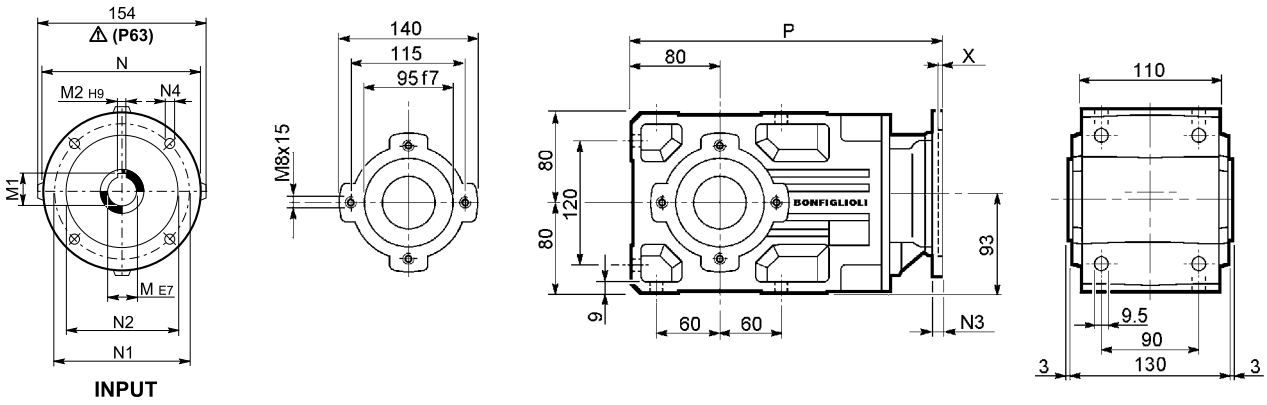

		M	M1	M2	N	N1	N2	N3	N4	X	P	Kg
A 20 2	**P63**	11	12.8	4	140	115	95	—	M8x19	4	306	12
A 20 2	**P71**	14	16.3	5	160	130	110	—	M8x16	4.5	306	12
A 20 2	**P80**	19	21.8	6	200	165	130	—	M10x14.5	4	325.5	13
A 20 2	**P90**	24	27.3	8	200	165	130	—	M10x14.5	4	325.5	13
A 20 2	**P100**	28	31.3	8	250	215	180	—	M12x16	4.5	335.5	17
A 20 2	**P112**	28	31.3	8	250	215	180	—	M12x16	4.5	335.5	17
A 20 3	**P63**	11	12.8	4	140	115	95	—	M8x19	4	361.5	13
A 20 3	**P71**	14	16.3	5	160	130	110	—	M8x16	4.5	361.5	13
A 20 3	**P80**	19	21.8	6	200	165	130	—	M10x14.5	4	381	14
A 20 3	**P90**	24	27.3	8	200	165	130	—	M10x14.5	4	381	14
A 20 3	**P100**	28	31.3	8	250	215	180	—	M12x16	4.5	391	18
A 20 3	**P112**	28	31.3	8	250	215	180	—	M12x16	4.5	391	18

A 20...HS

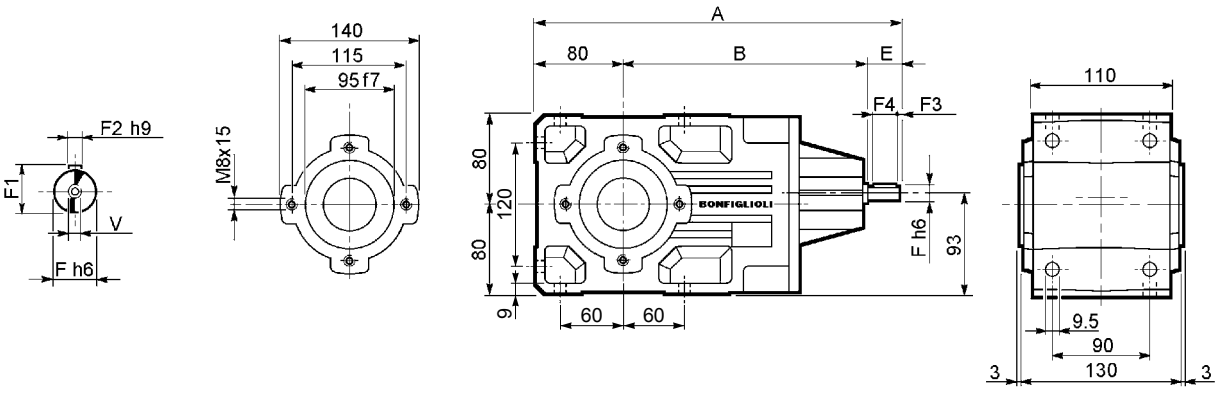

		A	B	E	F	F1	F2	F3	F4	V	Kg
A 20 2	**HS**	356	236	40	19	21.5	6	2.5	35	M6x16	11.9
A 20 3		368.5	248.5	40	16	18	5	2.5	35	M6x16	12.2

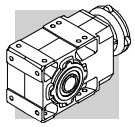

A 20...SK / SC / S

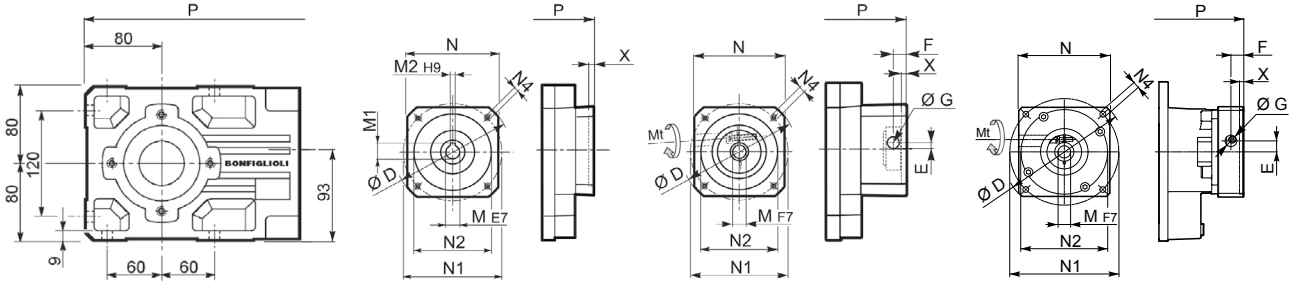

		D	M	M1	M2	N	N1	N2	N4	X	P 2x	P 3x	Kg
A 20 2/3	**SK60A**	102	11	12.8	4	82	75	60	M5x10	3.5	277.5	333	11/12
A 20 2/3	**SK60B**	102	14	16.3	5	82	75	60	M5x10	4	284.5	340	12/13
A 20 2/3	**SK80A**	115	14	16.3	5	90	100	80	M6x12	4	284.5	340	12/13
A 20 2/3	**SK80C**	120	19	21.8	6	96	100	80	M6x12	4	325.5	381	13/14
A 20 2/3	**SK95A**	130	14	16.3	5	102	115	95	M8x12	4	325.5	381	13/14
A 20 2/3	**SK95B**	130	19	21.8	6	102	115	95	M8x12	4	325.5	381	13/14
A 20 2/3	**SK95C**	130	24	27.3	8	102	115	95	M8x12	4	325.5	381	13/14
A 20 2/3	**SK110A**	150	19	21.8	6	120	130	110	M8x12	5	325.5	381	13/14
A 20 2/3	**SK110B**	150	24	27.3	8	120	130	110	M8x12	5	325.5	381	13/14

			Mt [Nm]	D	E	F	G	M	N	N1	N2	N4	X	P 2x	P 3x	Kg
A 20 2/3	**SC60A**	M6	15	102	7	12.5	12.5	11	82	75	60	M5x10	4	304.5	360	12/13
A 20 2/3	**SC60B**	M6	15	102	7	12.5	12.5	14	82	75	60	M5x10	4	304.5	360	13/14
A 20 2/3	**SC80A**	M6	15	115	6	12.5	12.5	14	90	100	80	M6x12	4	304.5	360	13/14
A 20 2/3	**SC80C**	M6	15	120	15.5	14.5	17.75	19	96	100	80	M6x12	4	349	404.5	14/15
A 20 2/3	**SC95A**	M6	15	130	16.5	15	17.75	14	102	115	95	M8x16	4	349	404.5	14/15
A 20 2/3	**SC95B**	M6	15	130	16.5	15	17.75	19	102	115	95	M8x16	4	349	404.5	14/15
A 20 2/3	**SC95C**	M6	15	130	16.5	15	17.75	24	102	115	95	M8x16	4	349	404.5	14/15
A 20 2/3	**SC110A**	M6	15	150	16.5	16	17.75	19	120	130	110	M8x16	5	349	404.5	15/16
A 20 2/3	**SC110B**	M6	15	150	16.5	16	17.75	24	120	130	110	M8x16	5	349	404.5	15/16

			Mt [Nm]	D	E	F	G	M	N	N1	N2	N4	X	P 2x	P 3x	Kg
A 20 2/3	**S11F60A2**	M6	11	135	16.3	15.5	13.75	11	100	75	60	M5x14	6.5	351	406.5	14/15
A 20 2/3	**S14F60A2**	M6	11	135	15.5	16.3	13.75	14	100	75	60	M5x14	6.5	351	406.5	14/15
A 20 2/3	**S14F80A1**	M6	11	135	15.5	16.3	13.75	14	100	100	80	M6x16	6.5	351	406.5	14/15
A 20 2/3	**S19F80A1**	M6	11	135	15.5	16.3	13.75	19	100	100	80	M6x16	6.5	351	406.5	14/15
A 20 2/3	**S16F80A1**	M6	11	135	15.5	16.3	17.75	16	100	100	80	M6x16	6.5	351	406.5	14/15
A 20 2/3	**S19F70B1**	M6	11	135	15.5	16.3	17.75	19	100	90	70	M5x12	6.5	351	406.5	14/15
A 20 2/3	**S19F95A**	M6	11	135	15.5	16.3	17.75	19	100	115	95	M8x18	6.5	351	406.5	14/15
A 20 2/3	**S24F110A**	M6	14	155	15.5	16.3	17.75	24	115	130	110	M8x18	6.5	351	406.5	14/15
A 20 2/3	**S24F95A**	M6	14	135	15.5	16.3	17.75	24	100	115	95	M8x18	6.5	351	406.5	14/15

A 20...F...

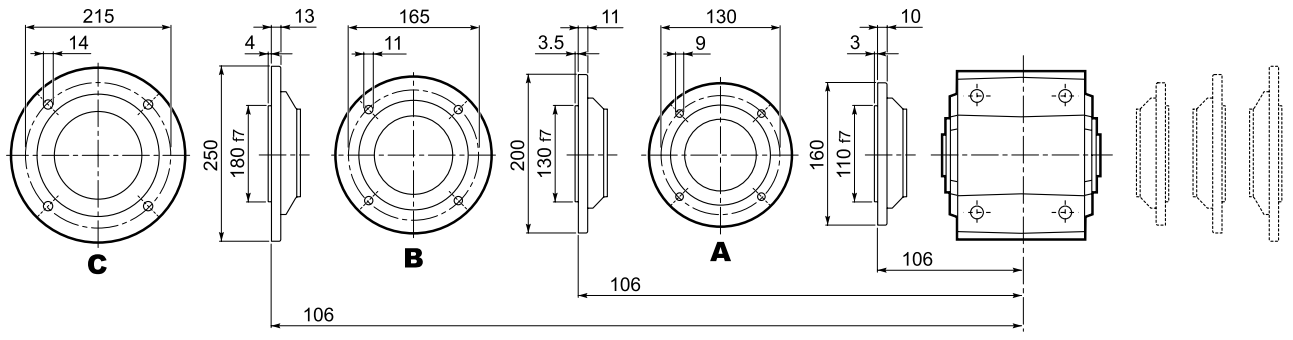

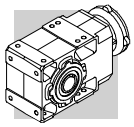

A 20

A 20...UR

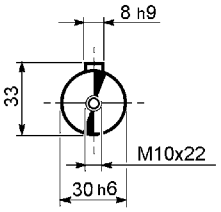

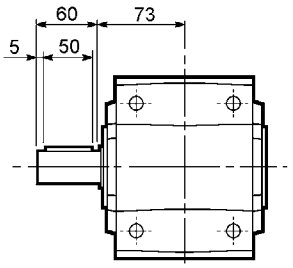

A 20...UD

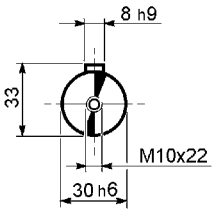

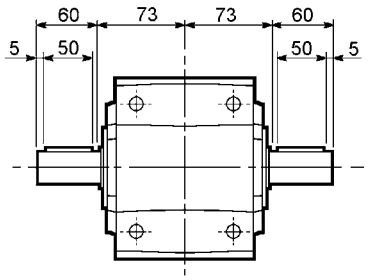

A 20...UH

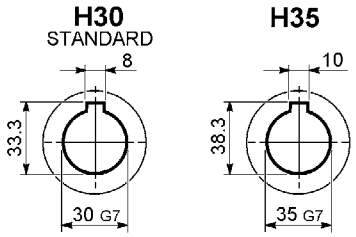

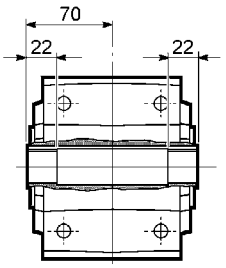

A 20...US

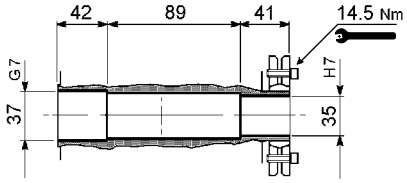

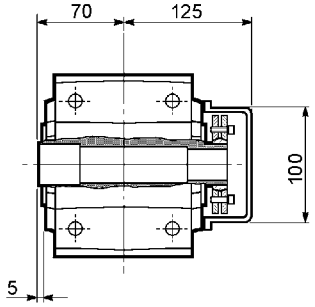

A 20...QF

	Ø
QF25	25
QF30	30

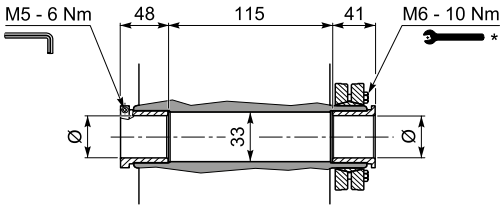

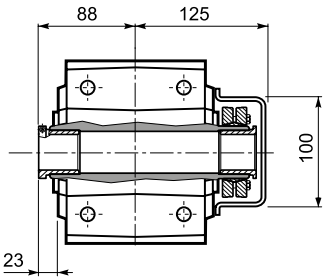

A 20...UV

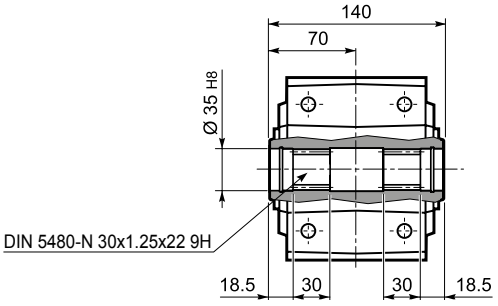

* Follow the MOUNTING INSTRUCTIONS supplied with the gearbox.

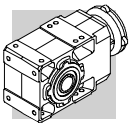

A 30...M/ME/MX/MXN

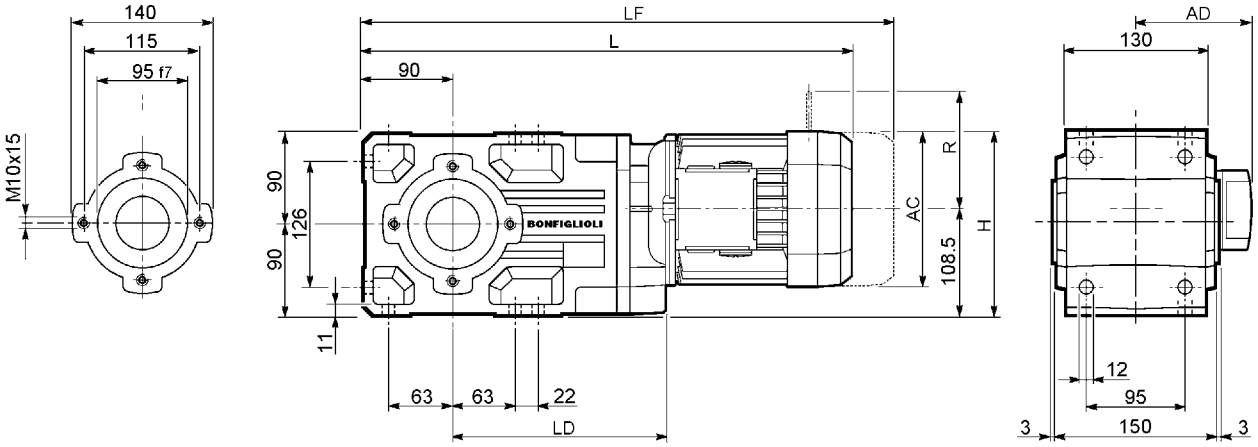

			Gearmotor - Without brake							Gearmotor - With brake								
										M...FD				M...FDD				
			AC	H	L		LD	AD	Kg	LF	Kg	R	AD	LF		Kg	R	AD
					plastic	metal								plastic	metal			
A 30 2	S1	M1	138	177.5	—	488	201	108	22	549	24	103	135	—	—	—	—	—
		ME1	138	177.5	—	488	201	108	22	549	24	103	135	—	—	—	—	—
		MX1	138	177.5	—	488	201	108	22	549	24	103	135	—	—	—	—	—
	SX10	MXN10	138	177.5	517	497.5	201	123.3	24.4	—	—	—	—	553	518.1	26.8	—	—
	S2	ME2S	156	186.5	—	517	213	119	25	587	27.1	129	143	—	—	—	—	—
		MX2S	156	186.5	—	561	213	119	30.1	633	34.6	129	143	—	—	—	—	—
	S3	ME3S	195	206	—	560	223	142	31.5	656	37.5	160	155	—	—	—	—	—
		MX3S	195	206	—	592	223	142	34.5	682	41.5	160	155	—	—	—	—	—
		ME3L	195	206	—	592	223	142	38	683	44	160	155	—	—	—	—	—
		MX3L	195	206	—	636	223	142	44	728	51	160	155	—	—	—	—	—
A 30 3	S05	M05	121	169	—	516.5	—	95	21	582.5	22	96	122	—	—	—	—	—
		ME05	121	169	—	516.5	—	95	21	582.5	22	96	119	—	—	—	—	—
		MX05	121	169	—	516.5	—	95	21	582.5	22	96	119	—	—	—	—	—
	SX05	MXN05	123	170	563	541	—	122.3	22.8	—	—	—	—	590	555.7	23.9	106	136
	S1	M1	138	177.5	—	545.5	—	108	23	606.5	26	103	135	—	—	—	—	—
		ME1	138	177.5	—	545.5	—	108	23	606.5	26	103	135	—	—	—	—	—
		MX1	138	177.5	—	545.5	—	108	23	606.5	26	103	135	—	—	—	—	—
	SX10	MXN10	138	177.5	574.5	555	—	123.3	25.4	—	—	—	—	610.5	575.6	27.8	106	138
	S2	ME2S	156	186.5	—	574.5	—	119	25	644.5	29.1	129	143	—	—	—	—	—
		MX2S	156	186.5	—	618.5	—	119	30.1	690.5	36.6	129	143	—	—	—	—	—
	SX20	MXN20	158	187.5	672	655.7	—	132.8	32.3	—	—	—	—	713	674.8	34.5	115	148
	S3	ME3S	195	206	—	617.5	—	142	31.5	713.5	38.4	160	155	—	—	—	—	—
		MX3S	195	206	—	649.5	—	142	34.5	739.5	41.5	160	155	—	—	—	—	—
		ME3L	195	206	—	649.5	—	142	38	740.5	44	160	155	—	—	—	—	—
		MX3L	195	206	—	693.5	—	142	44	785.5	51	160	155	—	—	—	—	—

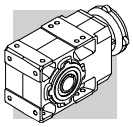

A 30...P(IEC)

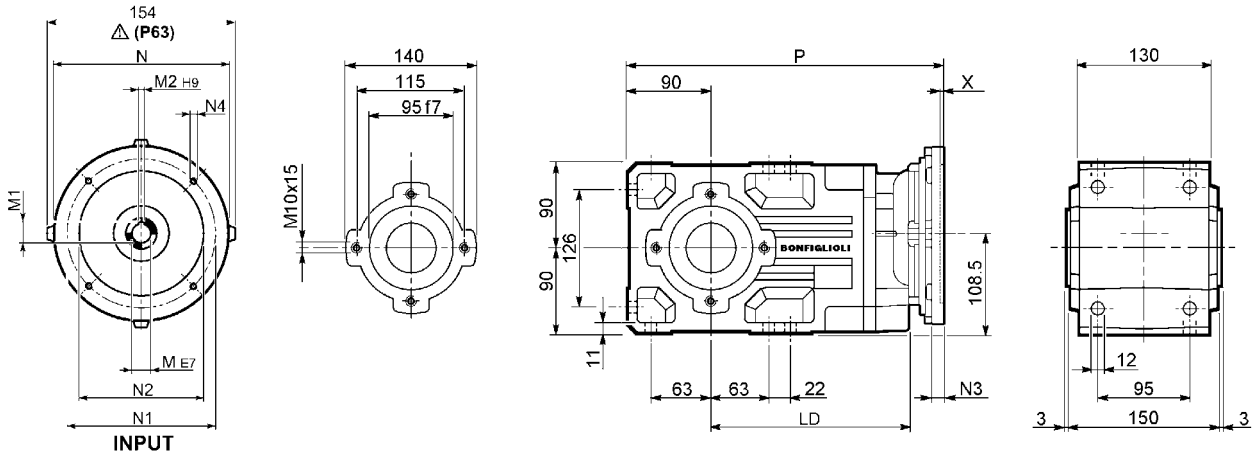

		LD	M	M1	M2	N	N1	N2	N3	N4	X	P	Kg
A 30 2	**P63**	213	11	12.8	4	140	115	95	—	M8x19	4	333	16
A 30 2	**P71**	213	14	16.3	5	160	130	110	—	M8x16	4.5	333	16
A 30 2	**P80**	223	19	21.8	6	200	165	130	—	M10x14.5	4	352.5	17
A 30 2	**P90**	223	24	27.3	8	200	165	130	—	M10x14.5	4	352.5	17
A 30 2	**P100**	223	28	31.3	8	250	215	180	—	M12x16	4.5	362.5	20
A 30 2	**P112**	223	28	31.3	8	250	215	180	—	M12x16	4.5	362.5	20
A 30 3	**P63**	—	11	12.8	4	140	115	95	—	M8x19	4	390.5	17
A 30 3	**P71**	—	14	16.3	5	160	130	110	—	M8x16	4.5	390.5	17
A 30 3	**P80**	—	19	21.8	6	200	165	130	—	M10x14.5	4	410	18
A 30 3	**P90**	—	24	27.3	8	200	165	130	—	M10x14.5	4	410	18
A 30 3	**P100**	—	28	31.3	8	250	215	180	—	M12x16	4.5	420	22
A 30 3	**P112**	—	28	31.3	8	250	215	180	—	M12x16	4.5	420	22

A 30...HS

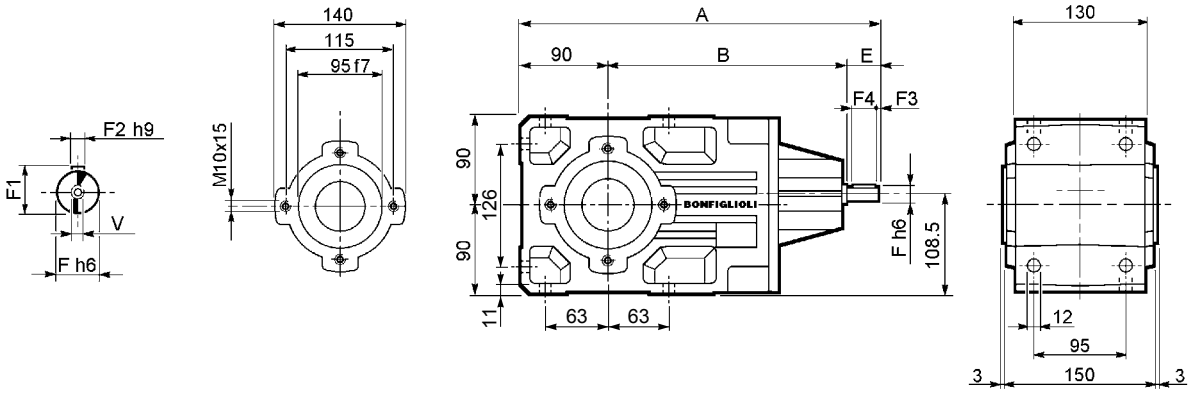

		A	B	E	F	F1	F2	F3	F4	V	Kg
A 30 2	**HS**	383	253	40	19	21.5	6	2.5	35	M6x16	16.7
A 30 3		397.5	267.5	40	16	18	5	2.5	35	M6x16	16.5

A 30...F...

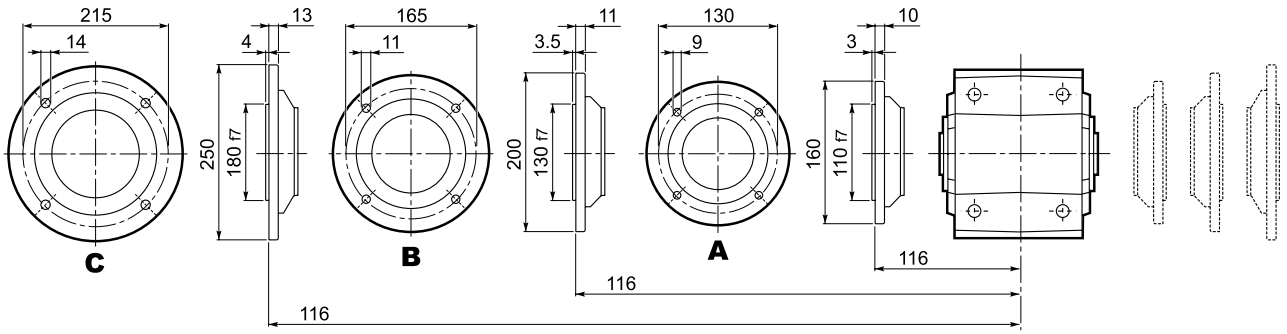

Bonfiglioli Riduttori

A 30...SK / SC / S

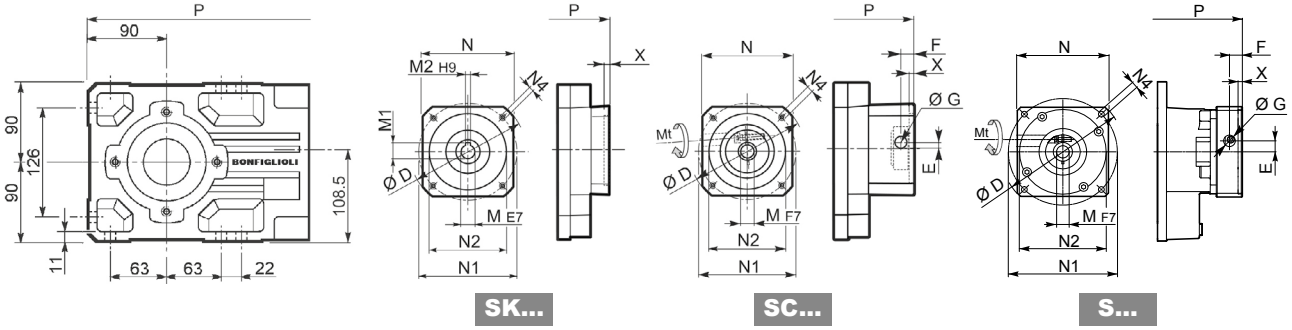

		D	M	M1	M2	N	N1	N2	N4	X	P 2x	P 3x	Kg
A 30 2/3	**SK60A**	102	11	12.8	4	82	75	60	M5x10	3.5	304.5	362	15/16
A 30 2/3	**SK60B**	102	14	16.3	5	82	75	60	M5x10	4	311.5	369	16/17
A 30 2/3	**SK80A**	115	14	16.3	5	90	100	80	M6x12	4	311.5	369	16/17
A 30 2/3	**SK80C**	120	19	21.8	6	96	100	80	M6x12	4	352.5	410	17/18
A 30 2/3	**SK95A**	130	14	16.3	5	102	115	95	M8x12	4	352.5	410	17/18
A 30 2/3	**SK95B**	130	19	21.8	6	102	115	95	M8x12	4	352.5	410	17/18
A 30 2/3	**SK95C**	130	24	27.3	8	102	115	95	M8x12	4	352.5	410	17/18
A 30 2/3	**SK110A**	150	19	21.8	6	120	130	110	M8x12	5	352.5	410	17/18
A 30 2/3	**SK110B**	150	24	27.3	8	120	130	110	M8x12	5	352.5	410	17/18
A 30 2	**SK130A**	188	24	27.3	8	142	165	130	M10x20	5	352.5	—	18

			Mt [Nm]	D	E	F	G	M	N	N1	N2	N4	X	P 2x	P 3x	Kg
A 30 2/3	**SC60A**	M6	15	102	7	12.5	12.5	11	82	75	60	M5x10	4	331.5	389	16/17
A 30 2/3	**SC60B**	M6	15	102	7	12.5	12.5	14	82	75	60	M5x10	4	331.5	389	17/18
A 30 2/3	**SC80A**	M6	15	115	6	12.5	12.5	14	90	100	80	M6x12	4	331.5	389	17/18
A 30 2/3	**SC80C**	M6	15	120	15.5	14.5	17.75	19	96	100	80	M6x12	4	376	433.5	18/19
A 30 2/3	**SC95A**	M6	15	130	16.5	15	17.75	14	102	115	95	M8x16	4	376	433.5	18/19
A 30 2/3	**SC95B**	M6	15	130	16.5	15	17.75	19	102	115	95	M8x16	4	376	433.5	18/19
A 30 2/3	**SC95C**	M6	15	130	16.5	15	17.75	24	102	115	95	M8x16	4	376	433.5	18/19
A 30 2/3	**SC 110A**	M6	15	150	16.5	16	17.75	19	120	130	110	M8x16	5	376	433.5	19/20
A 30 2/3	**SC 110B**	M6	15	150	16.5	16	17.75	24	120	130	110	M8x16	5	376	433.5	19/20
A 30 2	**SC 130A**	M6	15	188	19	16	17.75	24	142	165	130	M10x20	5	376	—	20

			Mt [Nm]	D	E	F	G	M	N	N1	N2	N4	X	P 2x	P 3x	Kg
A 30 2	**S14F80A2**	M6	11	165	17	19.5	17.75	14	130	100	80	M6x15	4	382	—	19
A 30 2	**S16F80A2**	M6	11	165	17	19.5	17.75	16	130	100	80	M6x15	4	382	—	19
A 30 2	**S19F110B1**	M6	11	165	17	29.5	17.75	19	130	145	110	M8x20	6.5	392	—	19
A 30 2	**S22F110B1**	M6	14	165	17	29.5	17.75	22	130	145	110	M8x20	6.5	392	—	19
A 30 2	**S24F110B1**	M6	14	165	17	29.5	17.75	24	130	145	110	M8x20	6.5	392	—	19
A 30 2	**S19F80A2**	M6	11	165	17	19.5	17.75	19	130	100	80	M6x15	4	382	—	19
A 30 2	**S19F95A1**	M6	11	165	17	19.5	17.75	19	130	115	95	M8x20	6.5	382	—	19
A 30 2	**S24F110A1**	M6	14	165	17	19.5	17.75	24	130	130	110	M8x20	4	382	—	19
A 30 2	**S24F130A**	M6	14	190	17	19.5	17.75	24	140	165	130	M10x20	6.5	382	—	19
A 30 2	**S24F95A1**	M6	14	165	17	19.5	17.75	24	130	115	95	M8x20	6.5	382	—	19
A 30 2	**S28F130A**	M8	20	190	17	19.5	17.75	28	140	165	130	M10x20	6.5	382	—	19
A 30 2	**S28F180A**	M8	20	205	21.5	29.5	17.75	28	190	215	180	M14x25	5.5	392	—	19

			Mt [Nm]	D	E	F	G	M	N	N1	N2	N4	X	P 2x	P 3x	Kg
A 30 3	**S11F60A2**	M6	11	135	16.3	15.5	13.75	11	100	75	60	M5x14	6.5	—	435.5	19
A 30 3	**S14F60A2**	M6	11	135	15.5	16.3	13.75	14	100	75	60	M5x14	6.5	—	435.5	19
A 30 3	**S14F80A1**	M6	11	135	15.5	16.3	13.75	14	100	100	80	M6x16	6.5	—	435.5	19
A 30 3	**S19F80A1**	M6	11	135	15.5	16.3	13.75	19	100	100	80	M6x16	6.5	—	435.5	19
A 30 3	**S16F80A1**	M6	11	135	15.5	16.3	17.75	16	100	100	80	M6x16	6.5	—	435.5	19
A 30 3	**S19F70B1**	M6	11	135	15.5	16.3	17.75	19	100	90	70	M5x12	6.5	—	435.5	19
A 30 3	**S19F95A**	M6	11	135	15.5	16.3	17.75	19	100	115	95	M8x18	6.5	—	435.5	19
A 30 3	**S24F110A**	M6	14	155	15.5	16.3	17.75	24	115	130	110	M8x18	6.5	—	435.5	19
A 30 3	**S24F95A**	M6	14	135	15.5	16.3	17.75	24	100	115	95	M8x18	6.5	—	435.5	19

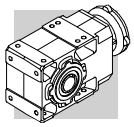

A 30

A 30...UR

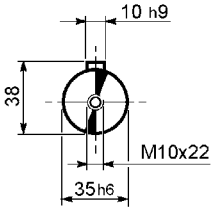

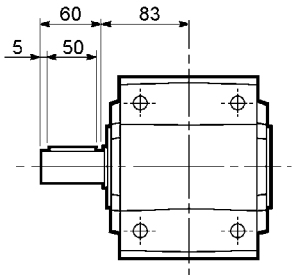

A 30...UD

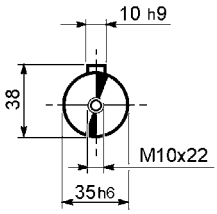

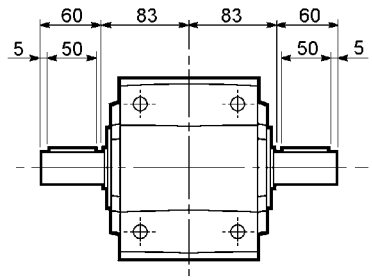

A 30...UH

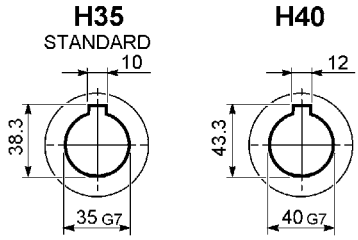

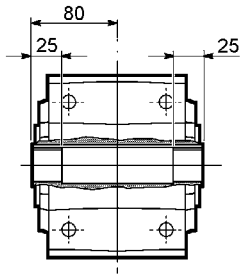

A 30...US

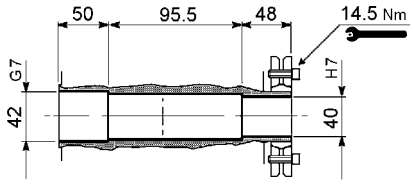

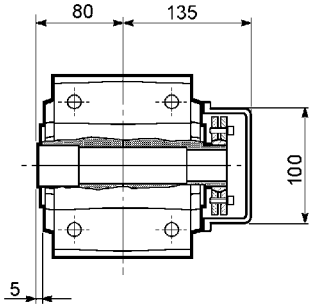

A 30...QF

	Ø
QF35	35
QF40	40

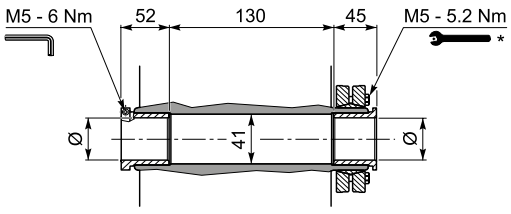

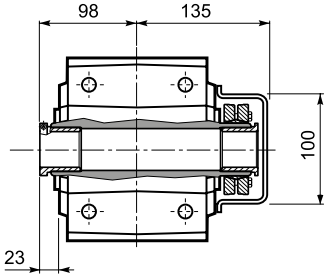

A 30...UV

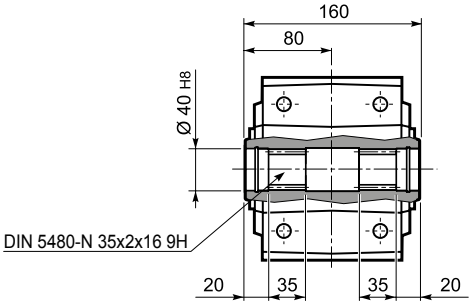

* Follow the MOUNTING INSTRUCTIONS supplied with the gearbox.

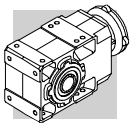

A 35...M/ME/MX/MXN

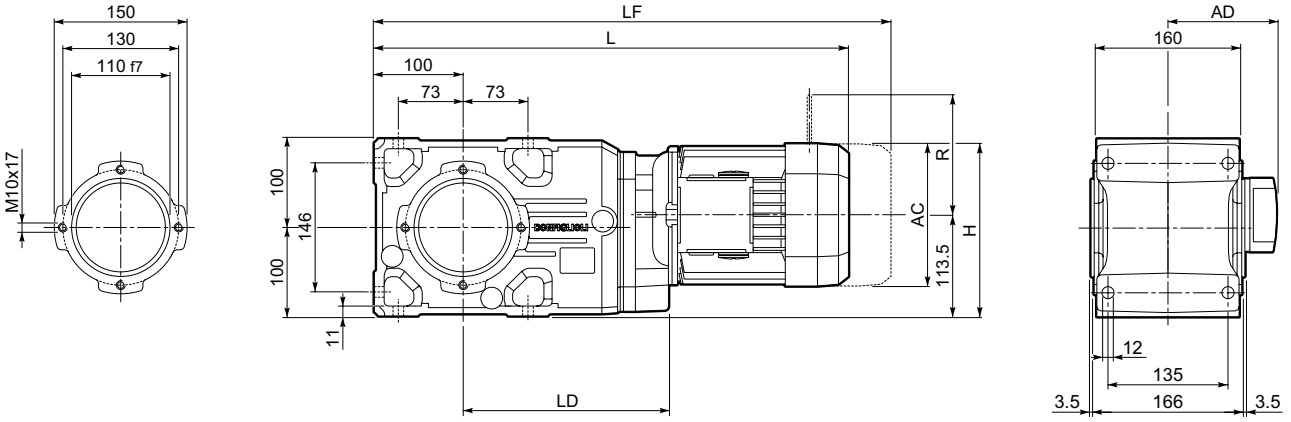

				Gearmotor - Without brake							Gearmotor - With brake								
											M...FD				M...FDD				
				AC	H	L		LD	AD	Kg	LF	Kg	R	AD	LF		Kg	R	AD
						plastic	metal								plastic	metal			
A 35 2	S1	M1		138	182.5	—	514.5	217.5	108	34	575.5	36	103	135	—	—	—	—	—
		ME1		138	182.5	—	514.5	217.5	108	34	575.5	36	103	135	—	—	—	—	—
		MX1		138	182.5	—	514.5	217.5	108	34	575.5	36	103	135	—	—	—	—	—
	SX10	MXN10		138	182.5	543.5	524.5	217.5	123.3	36.4	—	—	—	—	579.5	544.6	38.8	106	138
	S2	ME2S		156	191.5	—	543.5	229.5	119	37	613.5	39.1	129	143	—	—	—	—	—
		MX2S		156	191.5	—	587.5	229.5	119	37	659.5	46.3	129	143	—	—	—	—	—
	S3	ME3S		195	211	—	586.5	239.5	142	43.5	682.5	49.5	160	155	—	—	—	—	—
		MX3S		195	211	—	618.5	239.5	142	43.5	708.5	50.5	160	155	—	—	—	—	—
		ME3L		195	211	—	618.5	239.5	142	50	709.5	56	160	155	—	—	—	—	—
		MX3L		195	211	—	652.5	239.5	142	50	744.5	57	160	155	—	—	—	—	—
	S4	ME4	MX4	258	242.5	—	726.5	—	193	89	835.5	102	204	210	—	—	—	—	—
		ME4LB	MX4LA	258	242.5	—	761.5	—	193	97	860.5	113	226	210	—	—	—	—	—
A 35 3	S05	M05S		121	174	—	543	—	95	33	609	34	96	122	—	—	—	—	—
		ME05S		121	174	—	543	—	95	33	609	34	96	119	—	—	—	—	—
	SX05	MXN05		123	175	589.5	567.5	—	122.3	34.8	—	—	—	—	637	602.1	35.9	106	136
	S1	M1		138	182.5	—	572	—	108	35	633	38	103	135	—	—	—	—	—
		ME1		138	182.5	—	572	—	108	35	633	38	103	135	—	—	—	—	—
		MX1		138	182.5	—	572	—	108	35	633	38	103	135	—	—	—	—	—
	SX10	MXN10		138	182.5	601	581.5	—	123.3	37.4	—	—	—	—	739.5	701.3	39.8	106	138
	S2	ME2S		156	191.5	—	601	—	119	37	671	41.1	129	143	—	—	—	—	—
		MX2S		156	191.5	—	645	—	119	37	717	48.3	129	143	—	—	—	—	—
	SX20	MXN20		158	192.5	698.5	682.2	—	132.8	39.2	—	—	—	—	713	674.8	41.4	115	148
	S3	ME3S		195	211	—	644	—	142	43.5	740	50.4	160	155	—	—	—	—	—
		MX3S		195	211	—	676	—	142	43.5	766	52.4	160	155	—	—	—	—	—
		ME3L		195	211	—	676	—	142	50	767	53.6	160	155	—	—	—	—	—
		MX3L		195	211	—	720	—	142	50	812	59.4	160	155	—	—	—	—	—

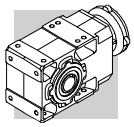

A 35...P(IEC)

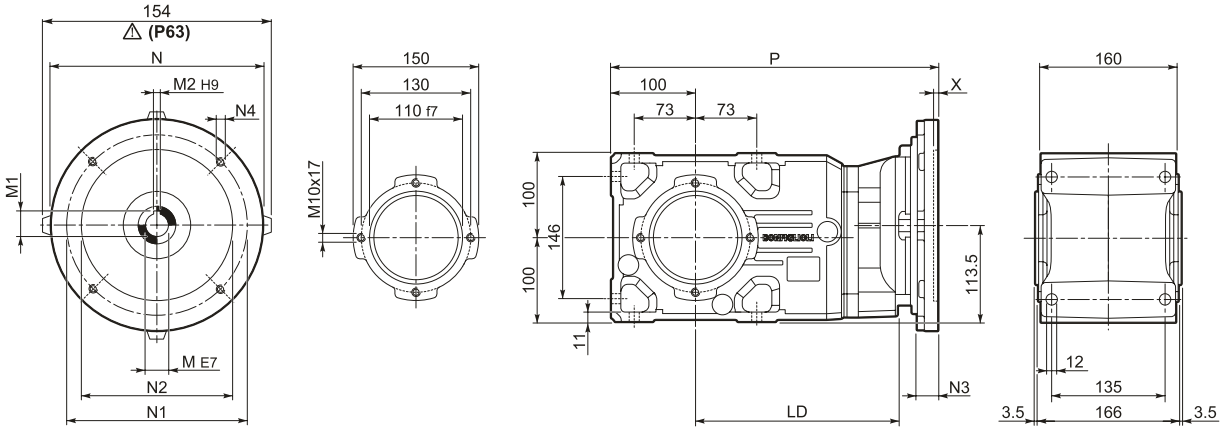

		LD	M	M1	M2	N	N1	N2	N3	N4	X	P	Kg
A 35 2	**P63**	229.5	11	12.8	4	140	115	95	—	M8x19	4	359.5	28
A 35 2	**P71**	229.5	14	16.3	5	160	130	110	—	M8x16	4.5	359.5	28
A 35 2	**P80**	239.5	19	21.8	6	200	165	130	—	M10x14.5	4	379	29
A 35 2	**P90**	239.5	24	27.3	8	200	165	130	—	M10x14.5	4	379	29
A 35 2	**P100**	239.5	28	31.3	8	250	215	180	—	M12x16	4.5	389	32
A 35 2	**P112**	239.5	28	31.3	8	250	215	180	—	M12x16	4.5	389	32
A 35 2	**P132**	—	38	41.3	10	300	265	230	16	14	5	425.5	40
A 35 3	**P63**	—	11	12.8	4	140	115	95	—	M8x19	4	417	29
A 35 3	**P71**	—	14	16.3	5	160	130	110	—	M8x16	4.5	417	29
A 35 3	**P80**	—	19	21.8	6	200	165	130	—	M10x14.5	4	436.5	30
A 35 3	**P90**	—	24	27.3	8	200	165	130	—	M10x14.5	4	436.5	30
A 35 3	**P100**	—	28	31.3	8	250	215	180	—	M12x16	4.5	446.5	34
A 35 3	**P112**	—	28	31.3	8	250	215	180	—	M12x16	4.5	446.5	34

A 35...HS

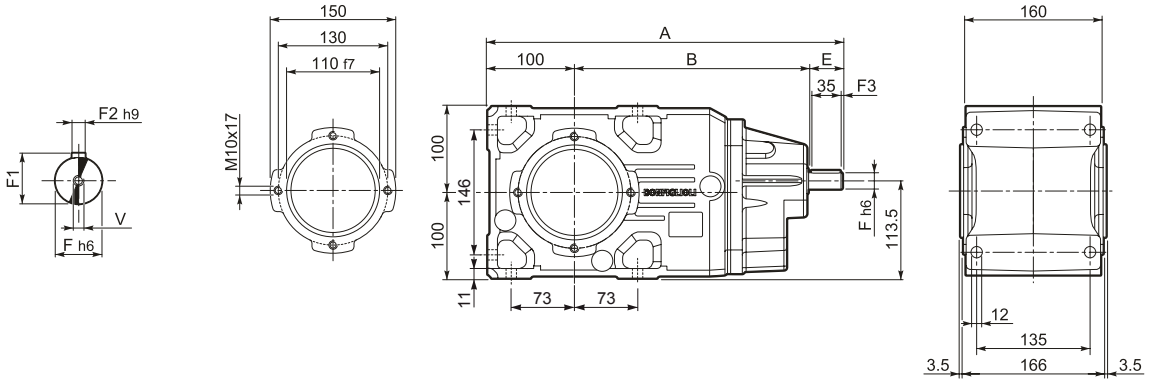

		A	B	E	F	F1	F2	F3	F4	V	Kg
A 35 2	**HS**	409.5	269.5	40	19	21.5	6	2.5	35	M6x16	29
A 35 3		424	284	40	16	18	5	2.5	35	M6x16	29

A 35...F...

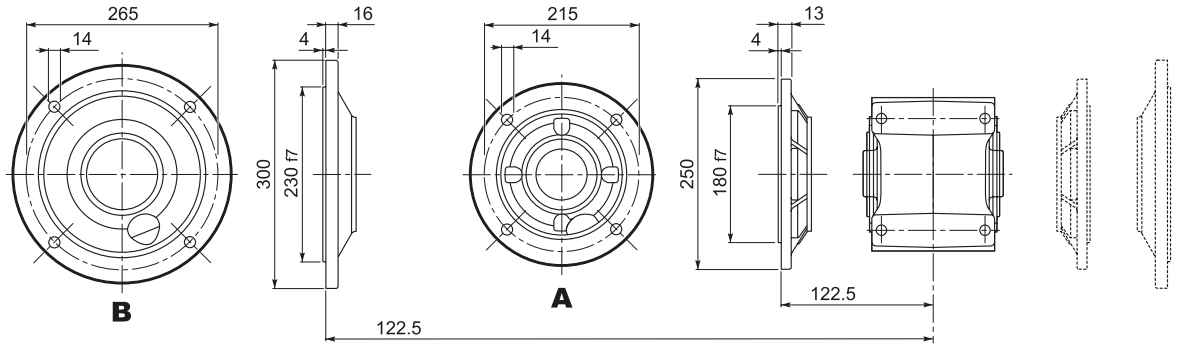

A 35...SK / SC / S

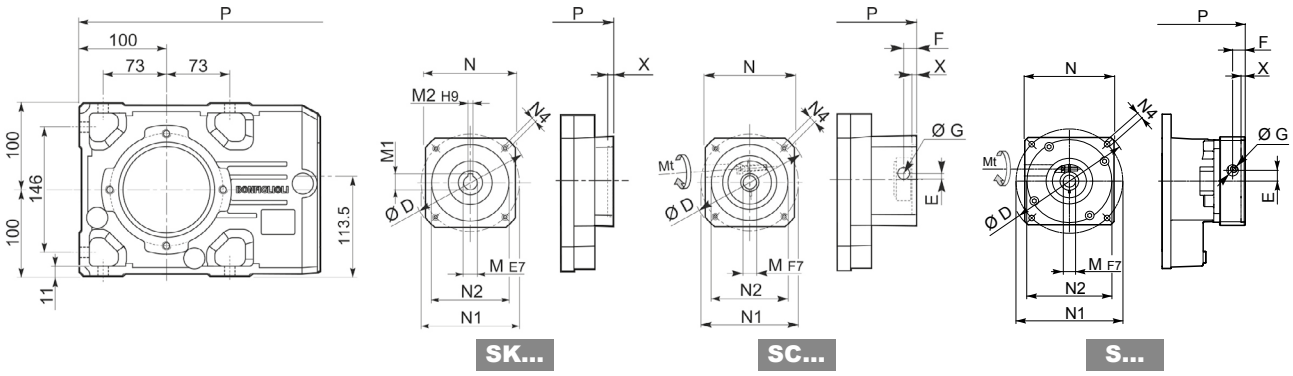

		D	M	M1	M2	N	N1	N2	N4	X	P 2x	P 3x	Kg
A 35 2/3	**SK60A**	102	11	12.8	4	82	75	60	M5x10	3.5	331	388.5	27/28
A 35 2/3	**SK60B**	102	14	16.3	5	82	75	60	M5x10	4	338	395.5	28/29
A 35 2/3	**SK80A**	115	14	16.3	5	90	100	80	M6x12	4	338	395.5	28/29
A 35 2/3	**SK80C**	120	19	21.8	6	96	100	80	M6x12	4	379	436.5	29/30
A 35 2/3	**SK95A**	130	14	16.3	5	102	115	95	M8x12	4	379	436.5	29/30
A 35 2/3	**SK95B**	130	19	21.8	6	102	115	95	M8x12	4	379	436.5	29/30
A 35 2/3	**SK95C**	130	24	27.3	8	102	115	95	M8x12	4	379	436.5	29/30
A 35 2/3	**SK110A**	150	19	21.8	6	120	130	110	M8x12	5	379	436.5	29/30
A 35 2/3	**SK110B**	150	24	27.3	8	120	130	110	M8x12	5	379	436.5	29/30
A 35 2	**SK130A**	188	24	27.3	8	142	165	130	M10x20	5	379	—	30

		Mt [Nm]		D	E	F	G	M	N	N1	N2	N4	X	P 2x	P 3x	Kg
A 35 2/3	**SC60A**	M6	15	102	7	12.5	12.5	11	82	75	60	M5x10	4	358	415.5	28/29
A 35 2/3	**SC60B**	M6	15	102	7	12.5	12.5	14	82	75	60	M5x10	4	358	415.5	29/30
A 35 2/3	**SC80A**	M6	15	115	6	12.5	12.5	14	90	100	80	M6x12	4	358	415.5	29/30
A 35 2/3	**SC80C**	M6	15	120	15.5	14.5	17.75	19	96	100	80	M6x12	4	402.5	460	30/31
A 35 2/3	**SC95A**	M6	15	130	16.5	15	17.75	14	102	115	95	M8x16	4	402.5	460	30/31
A 35 2/3	**SC95B**	M6	15	130	16.5	15	17.75	19	102	115	95	M8x16	4	402.5	460	30/31
A 35 2/3	**SC95C**	M6	15	130	16.5	15	17.75	24	102	115	95	M8x16	4	402.5	460	30/31
A 35 2/3	**SC110A**	M6	15	150	16.5	16	17.75	19	120	130	110	M8x16	5	402.5	460	32/33
A 35 2/3	**SC110B**	M6	15	150	16.5	16	17.75	24	120	130	110	M8x16	5	402.5	460	32/33
A 35 2	**SC130A**	M6	15	188	19	16	17.75	24	142	165	130	M10x20	5	402.5	—	33

		Mt [Nm]		D	E	F	G	M	N	N1	N2	N4	X	P 2x	P 3x	Kg
A 35 2	**S14F80A2**	M6	11	165	17	19.5	17.75	14	130	100	80	M6x15	4	408.5	—	31
A 35 2	**S16F80A2**	M6	11	165	17	19.5	17.75	16	130	100	80	M6x15	4	408.5	—	31
A 35 2	**S19F110B1**	M6	11	165	17	29.5	17.75	19	130	145	110	M8x20	6.5	408.5	—	31
A 35 2	**S22F110B1**	M6	14	165	17	29.5	17.75	22	130	145	110	M8x20	6.5	418.5	—	31
A 35 2	**S24F110B1**	M6	14	165	17	29.5	17.75	24	130	145	110	M8x20	6.5	418.5	—	31
A 35 2	**S19F80A2**	M6	11	165	17	19.5	17.75	19	130	100	80	M6x15	4	408.5	—	31
A 35 2	**S19F95A1**	M6	11	165	17	19.5	17.75	19	130	115	95	M8x20	6.5	408.5	—	31
A 35 2	**S24F110A1**	M6	14	165	17	19.5	17.75	24	130	130	110	M8x20	4	408.5	—	31
A 35 2	**S24F130A**	M6	14	190	17	19.5	17.75	24	140	165	130	M10x20	6.5	408.5	—	31
A 35 2	**S24F95A1**	M6	14	165	17	19.5	17.75	24	130	115	95	M8x20	6.5	408.5	—	31
A 35 2	**S28F130A**	M8	20	190	17	19.5	17.75	28	140	165	130	M10x20	6.5	408.5	—	31
A 35 2	**S28F180A**	M8	20	205	21.5	29.5	17.75	28	190	215	180	M14x25	5.5	418.5	—	31

		Mt [Nm]		D	E	F	G	M	N	N1	N2	N4	X	P 2x	P 3x	Kg
A 35 3	**S11F60A2**	M6	11	135	16.3	15.5	13.75	11	100	75	60	M5x14	6.5	—	462	32
A 35 3	**S14F60A2**	M6	11	135	15.5	16.3	13.75	14	100	75	60	M5x14	6.5	—	462	32
A 35 3	**S14F80A1**	M6	11	135	15.5	16.3	13.75	14	100	100	80	M6x16	6.5	—	462	32
A 35 3	**S19F80A1**	M6	11	135	15.5	16.3	13.75	19	100	100	80	M6x16	6.5	—	462	32
A 35 3	**S16F80A1**	M6	11	135	15.5	16.3	17.75	16	100	100	80	M6x16	6.5	—	462	32
A 35 3	**S19F70B1**	M6	11	135	15.5	16.3	17.75	19	100	90	70	M5x12	6.5	—	462	32
A 35 3	**S19F95A**	M6	11	135	15.5	16.3	17.75	19	100	115	95	M8x18	6.5	—	462	32
A 35 3	**S24F110A**	M6	14	155	15.5	16.3	17.75	24	115	130	110	M8x18	6.5	—	462	32
A 35 3	**S24F95A**	M6	14	135	15.5	16.3	17.75	24	100	115	95	M8x18	6.5	—	462	32

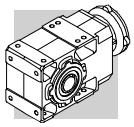

A 35

A 35...UR

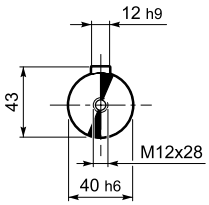

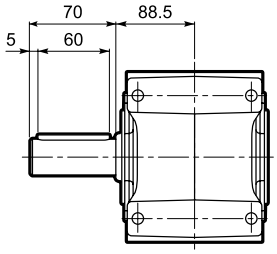

A 35...UD

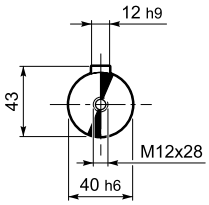

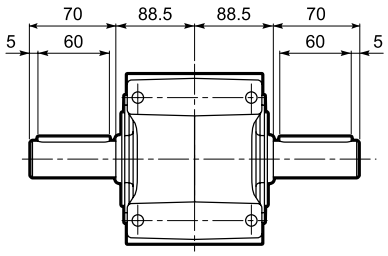

A 35...UH

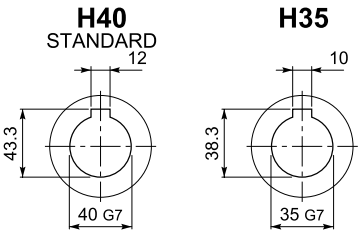

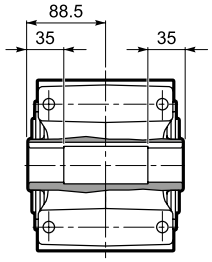

A 35...US

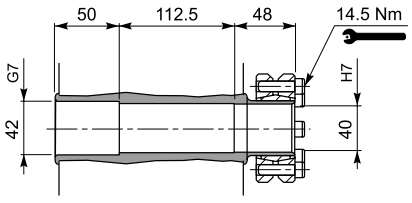

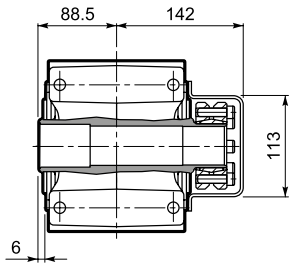

A 35...QF

	Ø
QF35	35
QF40	40

$M_{n2\ max}$ [Nm]	
A 35 QF35	550

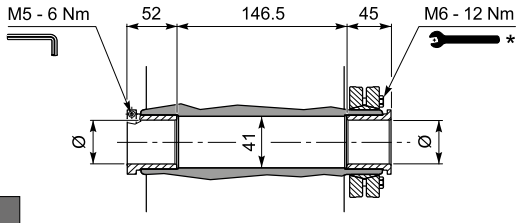

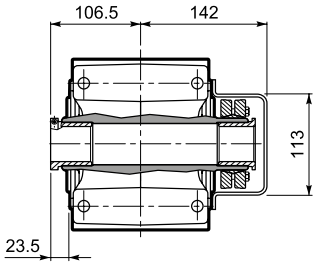

A 35...UV

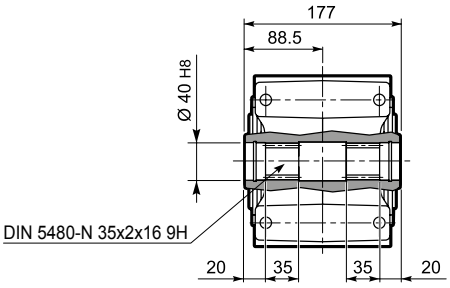

* Follow the MOUNTING INSTRUCTIONS supplied with the gearbox.

A 41...M/ME/MX/MXN

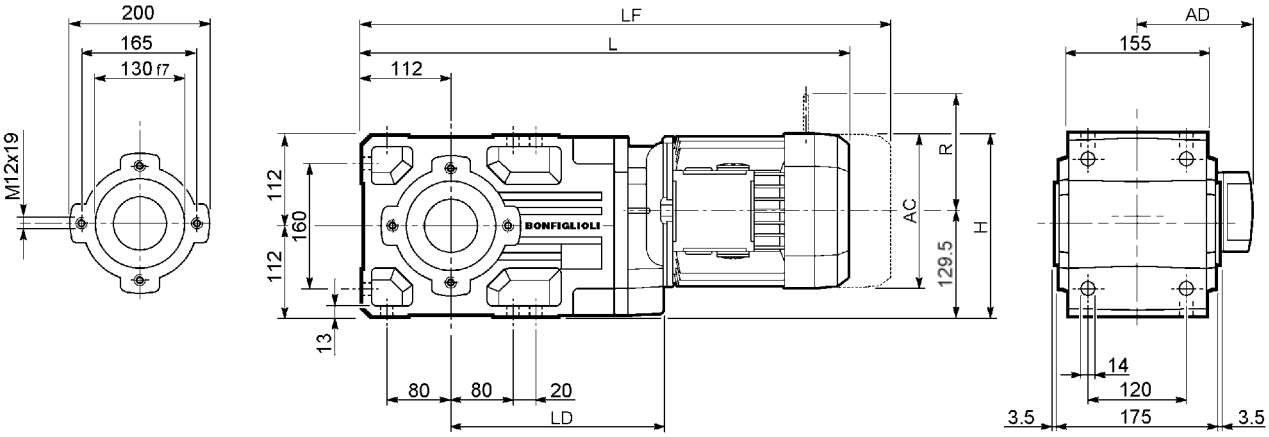

				Gearmotor - Without brake							Gearmotor - With brake								
											M...FD				M...FDD				
				AC	H	L		LD	AD	Kg	LF	Kg	R	AD	LF		Kg	R	AD
						plastic	metal								plastic	metal			
A 41 2	S1	M1		138	198.5	—	530	216.5	108	41	591	44	103	135	—	—	—	—	—
		ME1		138	198.5	—	530	216.5	108	41	591	44	103	135	—	—	—	—	—
		MX1		138	198.5	—	530	216.5	108	41	591	44	103	135	—	—	—	—	—
	S2	ME2S		156	207.5	—	559	232	119	45	629	46.8	129	143	—	—	—	—	—
		MX2S		156	207.5	—	603	232	119	50.1	675	53.7	129	143	—	—	—	—	—
	S3	ME3S		195	227	—	602	248	142	51.5	698	57.5	160	155	—	—	—	—	—
		MX3S		195	227	—	634	248	142	54.5	692	61.5	160	155	—	—	—	—	—
		ME3L		195	227	—	634	248	142	58	725	64.3	160	155	—	—	—	—	—
		MX3L		195	227	—	678	248	142	64	770	71	160	155	—	—	—	—	—
	S4	ME4	MX4	258	258.5	—	742	—	193	92	851	105	204	210	—	—	—	—	—
		ME4LB	MX4LA	258	258.5	—	777	—	193	100	876	116	226	210	—	—	—	—	—
A 41 3	S05	M05		121	245	—	562.5	—	95	44	628.5	46	96	122	—	—	—	—	—
		ME05		121	245	—	562.5	—	95	44	628.5	46	96	119	—	—	—	—	—
		MX05		121	245	—	562.5	—	95	44	628.5	46	96	119	—	—	—	—	—
	SX05	MXN05		123	246	609	587	—	122.3	45.8	—	—	—	—	636	601.7	46.9	106	136
	S1	M1		138	198.5	—	591.5	—	108	46	652.5	49	103	135	—	—	—	—	—
		ME1		138	198.5	—	591.5	—	108	46	652.5	49	103	135	—	—	—	—	—
		MX1		138	198.5	—	591.5	—	108	46	652.5	49	103	135	—	—	—	—	—
	SX10	MXN10		138	198.5	620.5	601	—	123.3	48.4	—	—	—	—	656.5	621.6	50.8	106	138
	S2	ME2S		156	207.5	—	620.5	—	119	50	690.5	51.6	129	143	—	—	—	—	—
		MX2S		156	207.5	—	664.5	—	119	55.1	736.5	58.9	129	143	—	—	—	—	—
	SX20	MXN20		158	208.5	718	701.7	—	132.8	57.3	—	—	—	—	759	720.8	59.5	115	148
	S3	ME3S		195	227	—	663.5	—	142	56.5	759.5	62.5	160	155	—	—	—	—	—
		MX3S		195	227	—	695.5	—	142	59.5	785.5	66.5	160	155	—	—	—	—	—
		ME3L		195	227	—	695.5	—	142	61	786.5	67.3	160	155	—	—	—	—	—
		MX3L		195	227	—	739.5	—	142	67	831.5	74.8	160	155	—	—	—	—	—

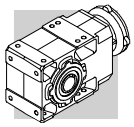

A 41...P(IEC)

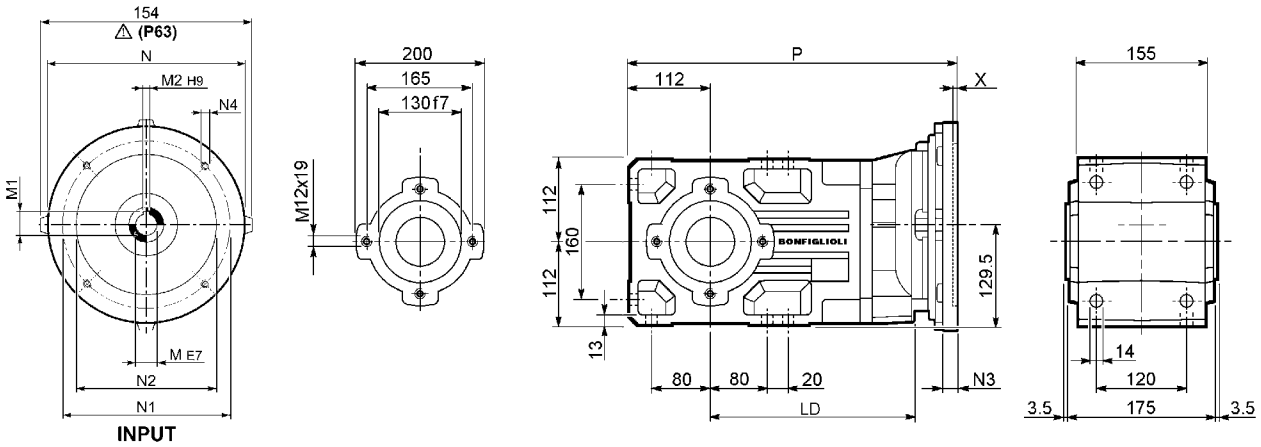

		LD	M	M1	M2	N	N1	N2	N3	N4	X	P	Kg
A 41 2	**P63**	232	11	12.8	4	140	115	95	—	M8x19	4	375	37
A 41 2	**P71**	232	14	16.3	5	160	130	110	—	M8x16	4.5	375	38
A 41 2	**P80**	248	19	21.8	6	200	165	130	—	M10x14.5	4	394.5	39
A 41 2	**P90**	248	24	27.3	8	200	165	130	—	M10x14.5	4	394.5	39
A 41 2	**P100**	—	28	31.3	8	250	215	180	—	M12x16	4.5	404.5	43
A 41 2	**P112**	—	28	31.3	8	250	215	180	—	M12x16	4.5	404.5	43
A 41 2	**P132**	—	38	41.3	10	300	265	230	16	14	5	441	46
A 41 3	**P63**	—	11	12.8	4	140	115	95	—	M8x19	4	436.5	39
A 41 3	**P71**	—	14	16.3	5	160	130	110	—	M8x16	4.5	436.5	39
A 41 3	**P80**	—	19	21.8	6	200	165	130	—	M10x14.5	4	456	40
A 41 3	**P90**	—	24	27.3	8	200	165	130	—	M10x14.5	4	456	40
A 41 3	**P100**	—	28	31.3	8	250	215	180	—	M12x16	4.5	466	44
A 41 3	**P112**	—	28	31.3	8	250	215	180	—	M12x16	4.5	466	44

A 41...HS

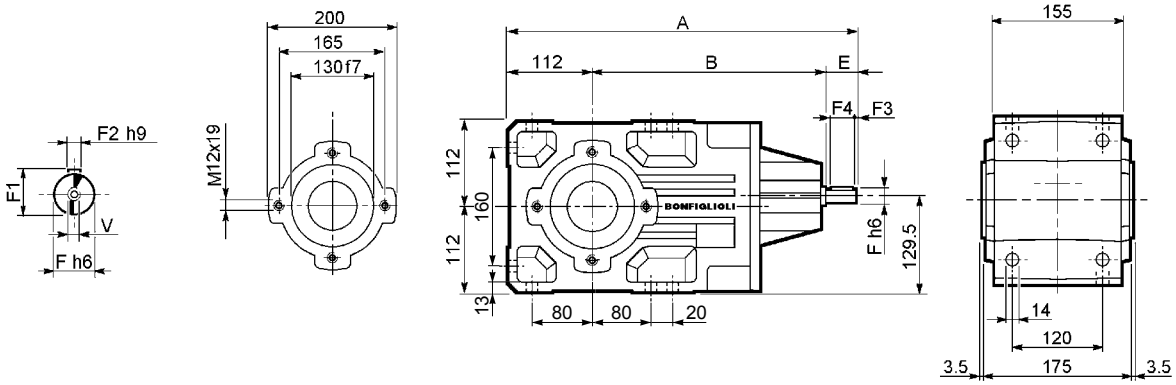

		A	B	E	F	F1	F2	F3	F4	V	Kg
A 41 2	**HS**	464	302.5	50	24	27	8	2.5	45	M8x19	40.7
A 41 3		486.5	334.5	40	19	21.5	6	2.5	35	M6x16	39.5

A 41...F...

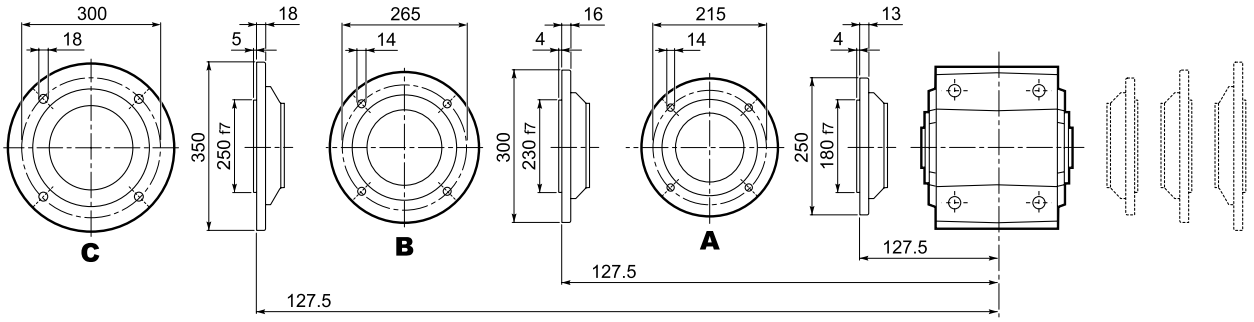

A 41...SK / SC / S

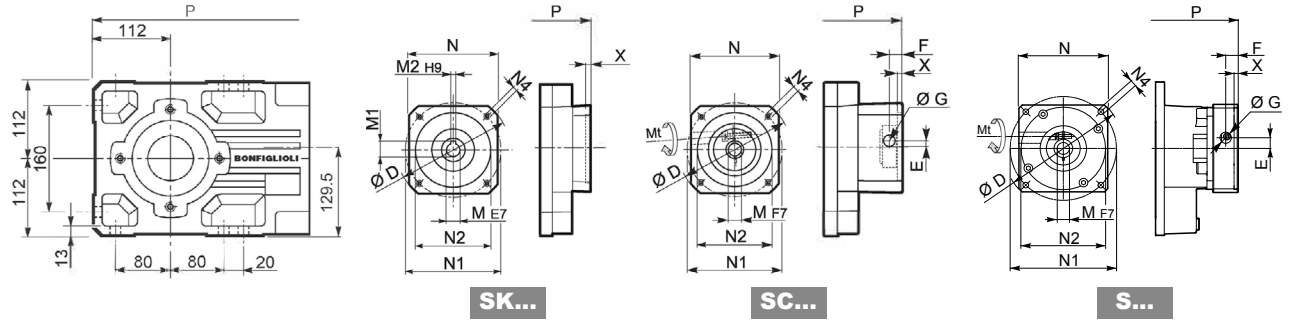

		D	M	M1	M2	N	N1	N2	N4	X	P 2x	P 3x	Kg
A41 3	**SK60A**	102	11	12.8	4	82	75	60	M5x10	3.5	—	408	40
A41 3	**SK60B**	102	14	16.3	5	82	75	60	M5x10	4	—	415	40
A41 3	**SK80A**	115	14	16.3	5	90	100	80	M6x12	4	—	415	40
A41 2	**SK80B**	120	14	16.3	5	96	100	80	M6x12	4	394.5	—	39
A41 2/3	**SK80C**	120	19	21.8	6	96	100	80	M6x12	4	394.5	456	39/40
A41 2/3	**SK95A**	130	14	16.3	5	102	115	95	M8x12	4	394.5	456	39/40
A41 2/3	**SK95B**	130	19	21.8	6	102	115	95	M8x12	4	394.5	456	39/41
A41 2/3	**SK95C**	130	24	27.3	8	102	115	95	M8x12	4	394.5	456	39/44
A41 2/3	**SK110A**	150	19	21.8	6	120	130	110	M8x12	5	394.5	456	39/44
A41 2/3	**SK110B**	150	24	27.3	8	120	130	110	M8x12	5	394.5	456	39/44
A41 2	**SK130A**	188	24	27.3	8	142	165	130	M10x20	5	394.5	—	41
A41 2	**SK130B**	189	32	35.3	10	160	165	130	M10x20	5	441	—	43
A41 2	**SK180A**	240	32	35.3	10	192	215	180	M12x19	5	441	—	43
A41 2	**SK180B**	240	38	41.3	10	192	215	180	M12x19	5	441	—	43

			Mt [Nm]	D	E	F	G	M	N	N1	N2	N4	X	P 2x	P 3x	Kg
A41 3	**SC60A**	M6	15	102	7	12.5	12.5	11	82	75	60	M5x10	4	—	435	41
A41 3	**SC60B**	M6	15	102	7	12.5	12.5	14	82	75	60	M5x10	4	—	435	41
A41 3	**SC80A**	M6	15	115	6	12.5	12.5	14	90	100	80	M6x12	4	—	435	41
A41 2	**SC80B**	M6	15	120	15.5	14.5	17.75	14	96	100	80	M6x12	4	418	—	40
A41 2/3	**SC80C**	M6	15	120	15.5	14.5	17.75	19	96	100	80	M6x12	4	418	479.5	40/41
A41 2/3	**SC95A**	M6	15	130	16.5	15	17.75	14	102	115	95	M8x16	4	418	479.5	40/42
A41 2/3	**SC95B**	M6	15	130	16.5	15	17.75	19	102	115	95	M8x16	4	418	479.5	40/42
A41 2/3	**SC95C**	M6	15	130	16.5	15	17.75	24	102	115	95	M8x16	4	418	479.5	40/43
A41 2/3	**SC110A**	M6	15	150	16.5	16	17.75	19	120	130	110	M8x16	5	418	479.5	41/47
A41 2/3	**SC110B**	M6	15	150	16.5	16	17.75	24	120	130	110	M8x16	5	418	479.5	41/47
A41 2	**SC130A**	M6	15	188	19	16	17.75	24	142	165	130	M10x20	5	418	—	42
A41 2	**SC130B**	M8	36	189	20	17	17.75	32	160	165	130	M10x20	5	464	—	46
A41 2	**SC180A**	M8	36	240	20	17.5	17.75	32	192	215	180	M12x24	5	468	—	46
A41 2	**SC180B**	M8	36	240	20	17.5	17.75	38	192	215	180	M12x24	5	468	—	46

			Mt [Nm]	D	E	F	G	M	N	N1	N2	N4	X	P 2x	P 3x	Kg
A 41 2	**S19F80A2**	M6	11	165	17	19.5	17.75	19	140	100	80	M6x15	5	466.5	—	44
A 41 2	**S19F95A1**	M6	11	165	17	19.5	17.75	19	140	115	95	M8x20	6.5	466.5	—	44
A 41 2	**S24F110A1**	M6	14	165	17	19.5	17.75	24	140	130	110	M8x20	5	466.5	—	44
A 41 2	**S24F130A**	M6	14	190	17	19.5	17.75	24	140	165	130	M10x20	6.5	466.5	—	44
A 41 2	**S24F95A1**	M6	14	165	17	19.5	17.75	24	140	115	95	M8x20	6.5	466.5	—	44
A 41 2	**S28F130A**	M8	20	190	17	19.5	17.75	28	140	165	130	M10x20	6.5	466.5	—	44
A 41 2	**S28F180A**	M8	20	250	21.5	29.5	17.75	28	190	215	180	M14x25	6.5	476.5	—	44
A 41 2	**S32F130A**	M8	20	190	17	19.5	17.75	32	140	165	130	M10x20	6.5	466.5	—	44
A 41 2	**S32F180A**	M8	20	250	21.5	29.5	17.75	32	190	215	180	M14x25	6.5	476.5	—	44
A 41 2	**S38F180A1**	M8	25	250	29.5	44.5	17.75	38	190	215	180	M14x25	6.5	496.5	—	44

			Mt [Nm]	D	E	F	G	M	N	N1	N2	N4	X	P 2x	P 3x	Kg
A 41 3	**S11F60A2**	M6	11	135	16.3	15.5	13.75	11	100	75	60	M5x14	6.5	—	481.5	43
A 41 3	**S14F60A2**	M6	11	135	15.5	16.3	13.75	14	100	75	60	M5x14	6.5	—	481.5	43
A 41 3	**S14F80A1**	M6	11	135	15.5	16.3	13.75	14	100	100	80	M6x16	6.5	—	481.5	43
A 41 3	**S19F80A1**	M6	11	135	15.5	16.3	13.75	19	100	100	80	M6x16	6.5	—	481.5	43
A 41 3	**S16F80A1**	M6	11	135	15.5	16.3	17.75	16	100	100	80	M6x16	6.5	—	481.5	43
A 41 3	**S19F70B1**	M6	11	135	15.5	16.3	17.75	19	100	90	70	M5x12	6.5	—	481.5	43
A 41 3	**S19F95A**	M6	11	135	15.5	16.3	17.75	19	100	115	95	M8x18	6.5	—	481.5	43
A 41 3	**S24F110A**	M6	14	155	15.5	16.3	17.75	24	115	130	110	M8x18	6.5	—	481.5	43
A 41 3	**S24F95A**	M6	14	135	15.5	16.3	17.75	24	100	115	95	M8x18	6.5	—	481.5	43

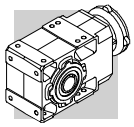

A 41

A 41...UR

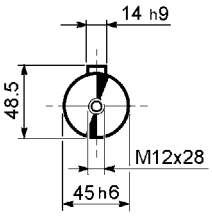

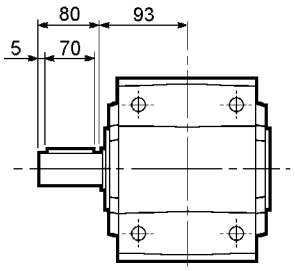

A 41...UD

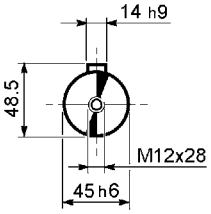

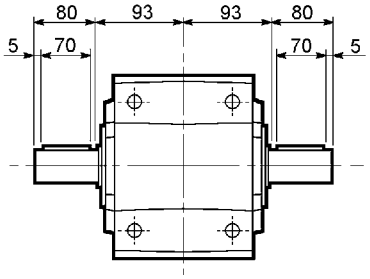

A 41...UH

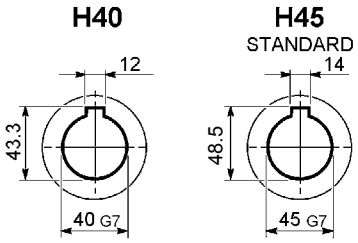

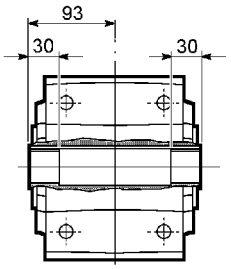

A 41...US

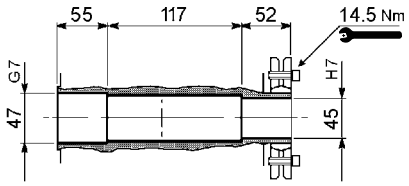

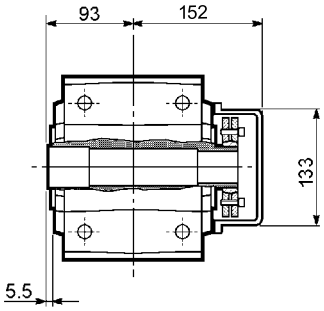

A 41...QF

	Ø
QF40	40
QF45	45

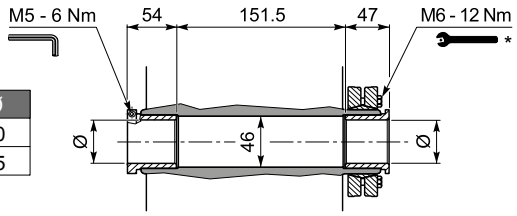

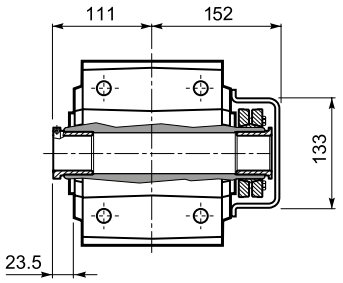

A 41...UV

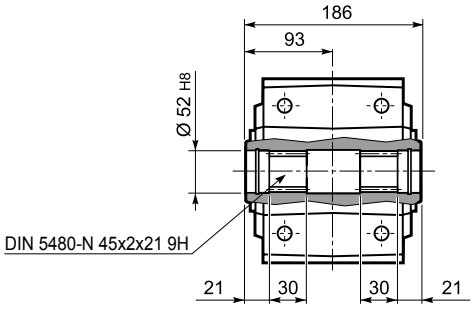

* Follow the MOUNTING INSTRUCTIONS supplied with the gearbox.

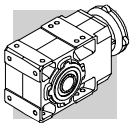

A 50...M/ME/MX/MXN

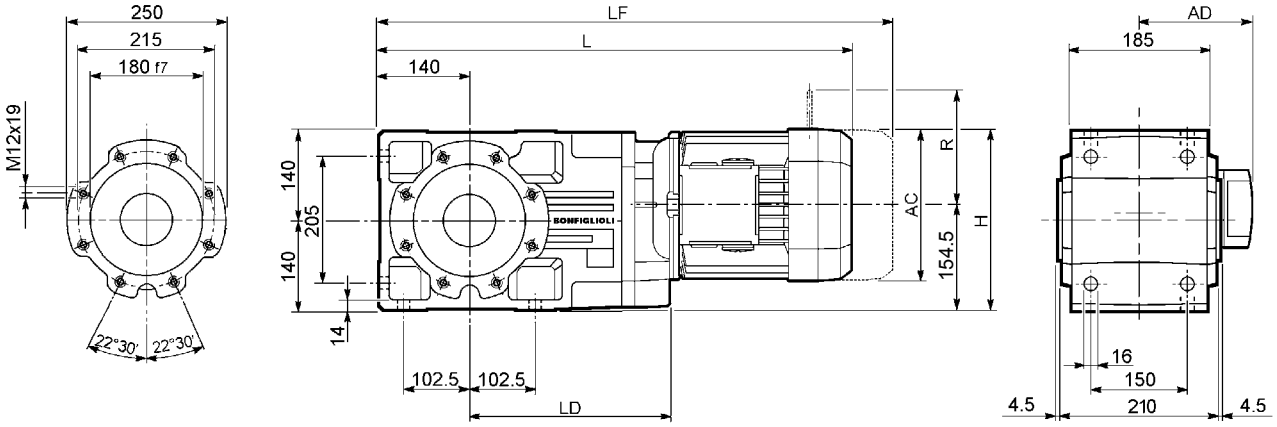

				Gearmotor - Without brake							Gearmotor - With brake								
											M...FD				M...FDD				
				AC	H	L plastic	L metal	LD	AD	Kg	LF	Kg	R	AD	LF plastic	LF metal	Kg	R	AD
A 50 2/3	S1	M1		138	223	—	609.5	—	108	66	670.5	69	103	135	—	—	—	—	—
		ME1		138	223	—	609.5	—	108	66	670.5	69	103	135	—	—	—	—	—
		MX1		138	223	—	609.5	—	108	66	670.5	69	103	135	—	—	—	—	—
	S2	ME2S		156	232	—	638.5	284.5	119	68	708.5	72.1	129	143	—	—	—	—	—
		MX2S		156	232	—	682.5	284.5	119	73.1	754.5	79.3	129	143	—	—	—	—	—
	S3	ME3S		195	251.5	—	681.5	299.5	142	74.5	777.5	81.4	160	155	—	—	—	—	—
		MX3S		195	251.5	—	713.5	299.5	142	77.5	803.5	86.4	160	155	—	—	—	—	—
		ME3L		195	251.5	—	713.5	299.5	142	81	804.5	87.9	160	155	—	—	—	—	—
		MX3L		195	251.5	—	757.5	299.5	142	87	849.5	95.4	160	155	—	—	—	—	—
	S4	ME4	MX4	258	283	—	821.5	284.5	193	115	930.5	128	204	210	—	—	—	—	—
		ME4LB	MX4LA	258	283	—	856.5	284.5	193	123	955.5	139.4	226	210	—	—	—	—	—
	S5	ME5S	MX5S	310	309	—	908	—	245	143	1048.5	184.4	266	245	—	—	—	—	—
		ME5L	MX5L	310	309	—	952	—	245	159	1092.5	210.4	266	245	—	—	—	—	—
A 50 4	S1	M1		138	223	—	681	—	108	67	742	70	103	135	—	—	—	—	—
		ME1		138	223	—	681	—	108	67	742	70	103	135	—	—	—	—	—
		MX1		138	223	—	681	—	108	67	742	70	103	135	—	—	—	—	—
	SX10	MXN10		138	223	710	690.5	—	123.3	69.4	—	—	—	—	746	711.1	71.8	106	138
	S2	ME2S		156	232	—	710	—	119	71	780	73.1	129	143	—	—	—	—	—
		MX2S		156	232	—	754	—	119	76.1	826	80.3	129	143	—	—	—	—	—
	S3	ME3S		195	251.5	—	753	—	142	77.5	849	83.5	160	155	—	—	—	—	—
		MX3S		195	251.5	—	785	—	142	80.5	875	87.4	160	155	—	—	—	—	—
		ME3L		195	251.5	—	785	—	142	83	876	89	160	155	—	—	—	—	—
		MX3L		195	251.5	—	829	—	142	89	921	96.4	160	155	—	—	—	—	—

A 50...P(IEC)

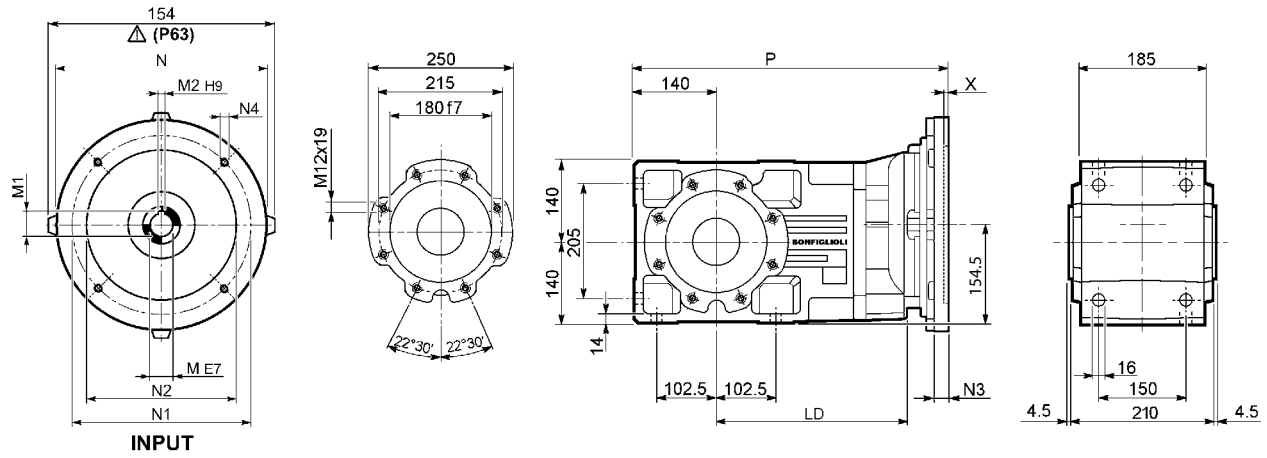

		LD	M	M1	M2	N	N1	N2	N3	N4	X	P	Kg
A 50 2/3	**P63**	284.5	11	12.8	4	140	115	95	—	M8x19	4	454.5	60
A 50 2/3	**P71**	284.5	14	16.3	5	160	130	110	—	M8x16	4.5	454.5	60
A 50 2/3	**P80**	299.5	19	21.8	6	200	165	130	—	M10x14.5	4	474	61
A 50 2/3	**P90**	299.5	24	27.3	8	200	165	130	—	M10x14.5	4	474	61
A 50 2/3	**P100**	284.5	28	31.3	8	250	215	180	—	M12x16	4.5	484	65
A 50 2/3	**P112**	284.5	28	31.3	8	250	215	180	—	M12x16	4.5	484	65
A 50 2/3	**P132**	284.5	38	41.3	10	300	265	230	16	14	5	520.5	68
A 50 2/3	**P160**	—	42	45.3	12	350	300	250	23	18	5.5	571	72
A 50 2/3	**P180**	—	48	51.8	14	350	300	250	23	18	5.5	571	72
A 50 4	**P63**	—	11	12.8	4	140	115	95	—	M8x19	4	526	62
A 50 4	**P71**	—	14	16.3	5	160	130	110	—	M8x16	4.5	526	62
A 50 4	**P80**	—	19	21.8	6	200	165	130	—	M10x14.5	4	545.5	63
A 50 4	**P90**	—	24	27.3	8	200	165	130	—	M10x14.5	4	545.5	63
A 50 4	**P100**	—	28	31.3	8	250	215	180	—	M12x16	4.5	555.5	67
A 50 4	**P112**	—	28	31.3	8	250	215	180	—	M12x16	4.5	555.5	67

A 50...HS

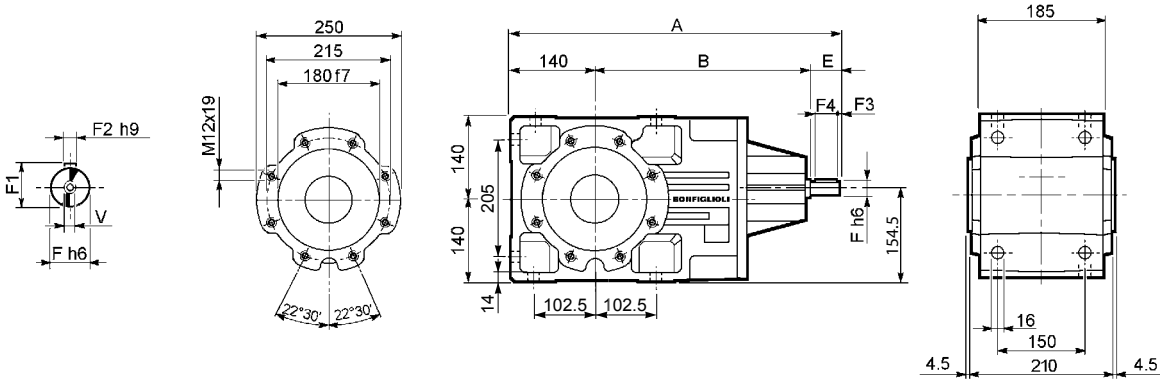

		A	B	E	F	F1	F2	F3	F4	V	Kg
A 50 2		543.5	353.5	50	24	27	8	2.5	45	M8x19	72
A 50 3	**HS**	543.5	353.5	50	24	27	8	2.5	45	M8x19	76
A 50 4		576	396	40	19	21.5	6	2.5	35	M6x16	77

A 50...SK / SC

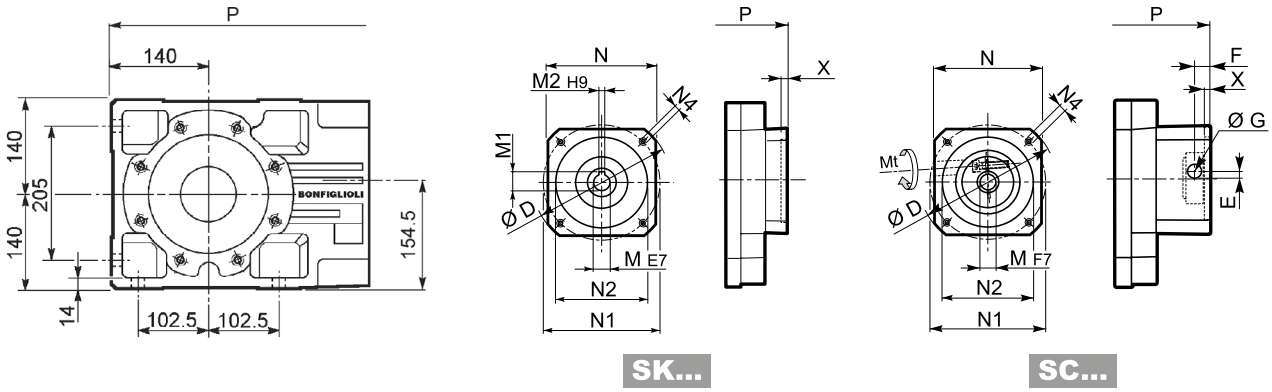

		D	M	M1	M2	N	N1	N2	N4	X	P 2/3x	P 4x	Kg
A 50 2/3	**SK80B**	120	14	16.3	5	96	100	80	M6x12	4	474	—	61/61
A 50 2/3/4	**SK80C**	120	19	21.8	6	96	100	80	M6x12	4	474	545.5	61/61/63
A 50 2/3/4	**SK95A**	130	14	16.3	5	102	115	95	M8x12	4	474	545.5	61/61/63
A 50 2/3/4	**SK95B**	130	19	21.8	6	102	115	95	M8x12	4	474	545.5	61/61/63
A 50 2/3/4	**SK95C**	130	24	27.3	8	102	115	95	M8x12	4	474	545.5	61/61/63
A 50 2/3/4	**SK110A**	150	19	21.8	6	120	130	110	M8x12	5	474	545.5	61/61/65
A 50 2/3/4	**SK110B**	150	24	27.3	8	120	130	110	M8x12	5	474	575	61/61/65
A 50 2/3/4	**SK130A**	188	24	27.3	8	142	165	130	M10x20	5	474	575	63/63/66
A 50 2/3	**SK130B**	189	32	35.3	10	160	165	130	M10x20	5	520.5	—	69/69
A 50 2/3	**SK180A**	240	32	35.3	10	192	215	180	M12x19	5	520.5	—	69/69
A 50 2/3	**SK180B**	240	38	41.3	10	192	215	180	M12x19	5	520.5	—	69/69

		Mt [Nm]	D	E	F	G	M	N	N1	N2	N4	X	P 2/3x	P 3x	Kg
A 50 2/3	**SC80B**	M6 15	120	15.5	14.5	17.75	14	96	100	80	M6x12	4	497.5	—	62/62
A 50 2/3/4	**SC80C**	M6 15	120	15.5	14.5	17.75	19	96	100	80	M6x12	4	497.5	569	62/62/64
A 50 2/3/4	**SC95A**	M6 15	130	16.5	15	17.75	14	102	115	95	M8x16	4	497.5	569	62/62/64
A 50 2/3/4	**SC95B**	M6 15	130	16.5	15	17.75	19	102	115	95	M8x16	4	497.5	569	62/62/64
A 50 2/3/4	**SC95C**	M6 15	130	16.5	15	17.75	24	102	115	95	M8x16	4	497.5	569	62/62/64
A 50 2/3/4	**SC110A**	M6 15	150	16.5	16	17.75	19	120	130	110	M8x16	5	497.5	569	63/63/66
A 50 2/3/4	**SC110B**	M6 15	150	16.5	16	17.75	24	120	130	110	M8x16	5	497.5	569	63/63/66
A 50 2/3/4	**SC130A**	M6 15	188	19	16	17.75	24	142	165	130	M10x20	5	497.5	569	64/64/67
A 50 2/3	**SC130B**	M8 36	189	20	17	17.75	32	160	165	130	M10x20	5	543.5	—	68/68
A 50 2/3	**SC180A**	M8 36	240	20	17.5	17.75	32	192	215	180	M12x24	5	547.5	—	68/68
A 50 2/3	**SC180B**	M8 36	240	20	17.5	17.75	38	192	215	180	M12x24	5	547.5	—	68/68

A 50...F...

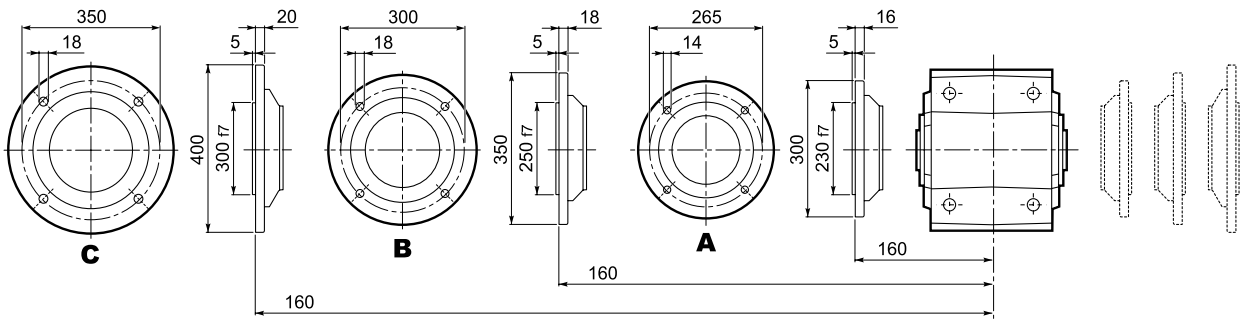

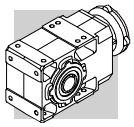

A 50

A 50...UR

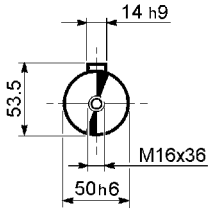

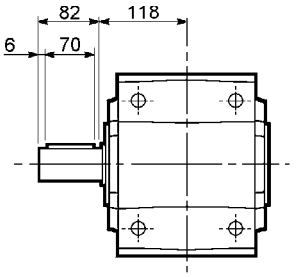

A 50...UD

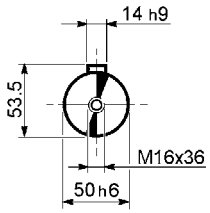

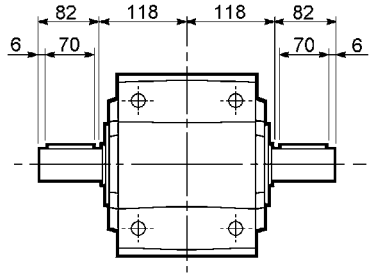

A 50...UH

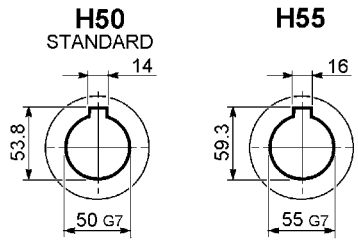

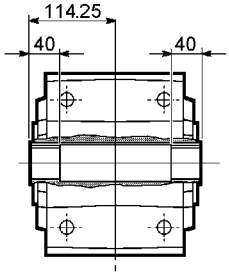

A 50...US

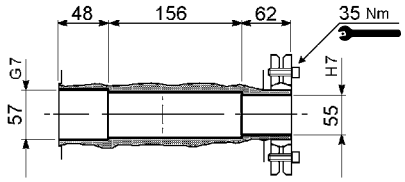

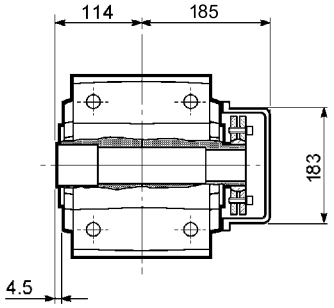

A 50...QF

	Ø
QF50	50
QF55	55

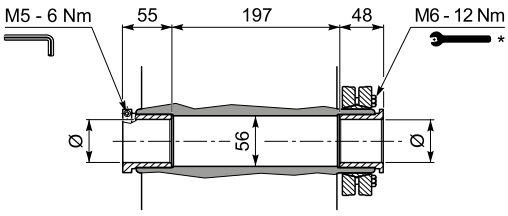

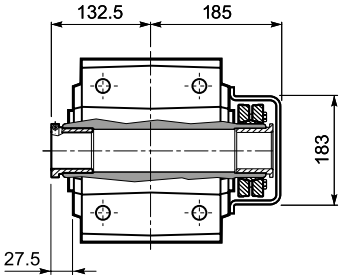

A 50...UV

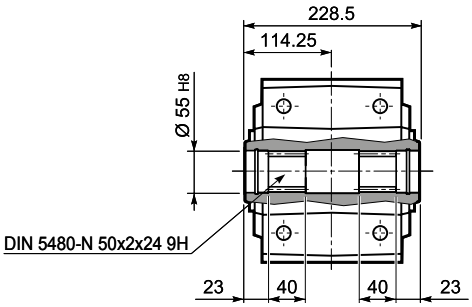

* Follow the MOUNTING INSTRUCTIONS supplied with the gearbox.

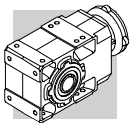

A 55...M/ME/MX/MXN

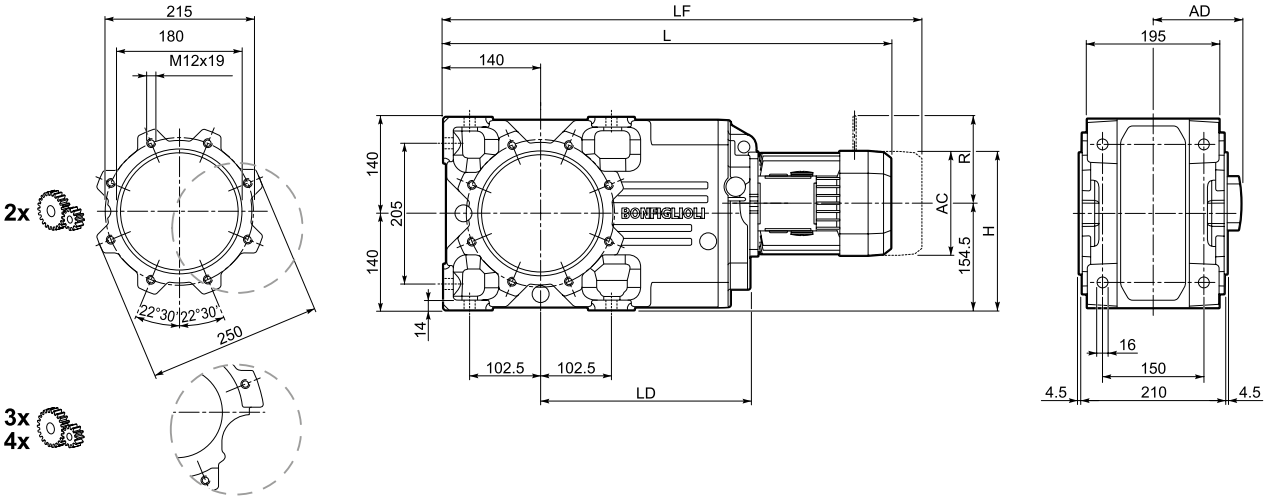

				Gearmotor - Without brake							Gearmotor - With brake								
											M...FD				M...FDD				
				AC	H	L plastic	L metal	LD	AD	Kg	LF	Kg	R	AD	LF plastic	LF metal	Kg	R	AD
A 55 3	S1	M1		138	198.5	—	627.5	—	108	81	688.5	84	103	135	—	—	—	—	—
		ME1		138	198.5	—	627.5	—	108	81	688.5	84	103	135	—	—	—	—	—
		MX1		138	198.5	—	627.5	—	108	81	688.5	84	103	135	—	—	—	—	—
A 55 2/3	S2	ME2S		156	232	—	656.5	302.5	119	88	726.5	89.6	129	143	—	—	—	—	—
		MX2S		156	232	—	700.5	302.5	119	93.1	787.5	96.9	129	143	—	—	—	—	—
	S3	ME3S		195	251	—	699.5	317.5	142	94.5	795.5	100.5	160	155	—	—	—	—	—
		MX3S		195	251	—	731.5	317.5	142	97.5	823.5	104.5	160	155	—	—	—	—	—
		ME3L		195	251	—	731.5	317.5	142	101	822.5	107	160	155	—	—	—	—	—
		MX3L		195	251	—	775.5	317.5	142	107	867.5	114	160	155	—	—	—	—	—
	S4	ME4	MX4	258	283	—	839.5	302.5	193	135	979.5	148	204	210	—	—	—	—	—
		ME4LB	MX4LA	258	283	—	874.5	302.5	193	143	973.5	156	226	210	—	—	—	—	—
	S5	ME5S	MX5S	310	309.5	—	926	—	245	163	1066.5	275	266	245	—	—	—	—	—
		ME5L	MX5L	310	309.5	—	970	—	245	179	1110.5	275	266	245	—	—	—	—	—
A 55 4	S1	M1		138	223	—	699	—	108	82	760	85	103	135	—	—	—	—	—
		ME1		138	223	—	699	—	108	82	760	85	103	135	—	—	—	—	—
		MX1		138	223	—	699	—	108	82	760	85	103	135	—	—	—	—	—
	SX10	MXN10		138	223	728	708.5	—	123.3	84.4	—	—	—	—	764	729.1	86.8	106	138
	S2	ME2S		156	232	—	728	—	119	86	798	88.1	129	143	—	—	—	—	—
		MX2S		156	232	—	772	—	119	91.1	859	95.3	129	143	—	—	—	—	—
	S3	ME3S		195	251.5	—	771	—	142	92.5	867	98.5	160	155	—	—	—	—	—
		MX3S		195	251.5	—	803	—	142	95.5	893	102.5	160	155	—	—	—	—	—
		ME3L		195	251.5	—	803	—	142	98	894	104	160	155	—	—	—	—	—
		MX3L		195	251.5	—	847	—	142	104	939	111.4	160	155	—	—	—	—	—

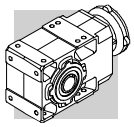

A 55...P(IEC)

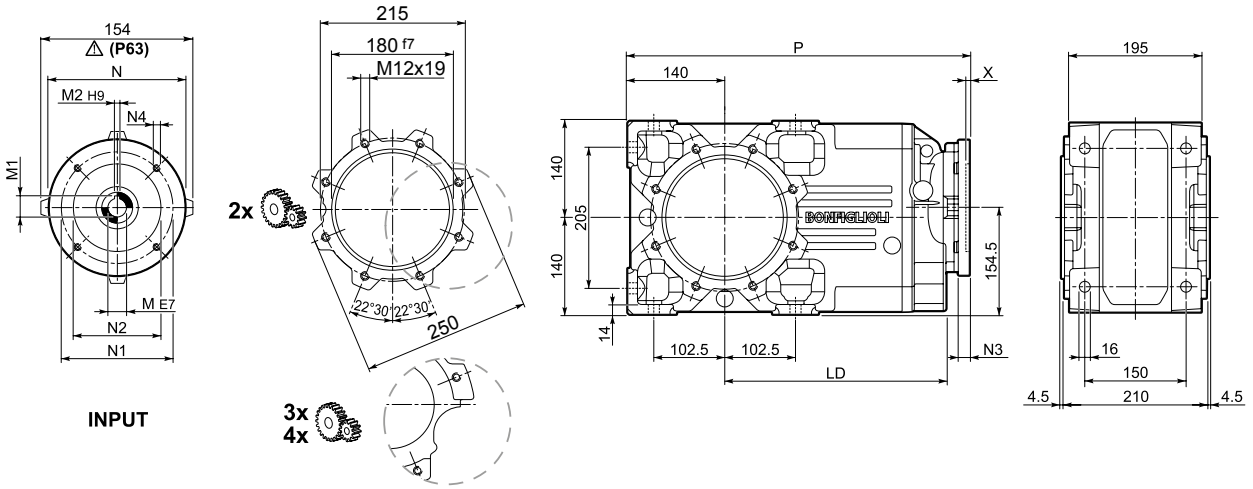

		LD	M	M1	M2	N	N1	N2	N3	N4	X	P	Kg
A 55 3	**P63**	302.5	11	12.8	4	140	115	95	—	M8x19	4	472.5	75
A 55 3	**P71**	302.5	14	16.3	5	160	130	110	—	M8x16	4.5	472.5	75
A 55 2/3	**P80**	317.5	19	21.8	6	200	165	130	—	M10x14.5	4	492	81
A 55 2/3	**P90**	317.5	24	27.3	8	200	165	130	—	M10x14.5	4	492	81
A 55 2/3	**P100**	302.5	28	31.3	8	250	215	180	—	M12x16	4.5	502	85
A 55 2/3	**P112**	302.5	28	31.3	8	250	215	180	—	M12x16	4.5	502	85
A 55 2/3	**P132**	302.5	38	41.3	10	300	265	230	16	14	5	538.5	93
A 55 2/3	**P160**	—	42	45.3	12	350	300	250	23	18	5.5	589	110
A 55 2/3	**P180**	—	48	51.8	14	350	300	250	23	18	5.5	589	110
A 55 4	**P63**	—	11	12.8	4	140	115	95	—	M8x19	4	544	77
A 55 4	**P71**	—	14	16.3	5	160	130	110	—	M8x16	4.5	544	77
A 55 4	**P80**	—	19	21.8	6	200	165	130	—	M10x14.5	4	563.5	78
A 55 4	**P90**	—	24	27.3	8	200	165	130	—	M10x14.5	4	563.5	78
A 55 4	**P100**	—	28	31.3	8	250	215	180	—	M12x16	4.5	573.5	82
A 55 4	**P112**	—	28	31.3	8	250	215	180	—	M12x16	4.5	573.5	82

A 55...HS

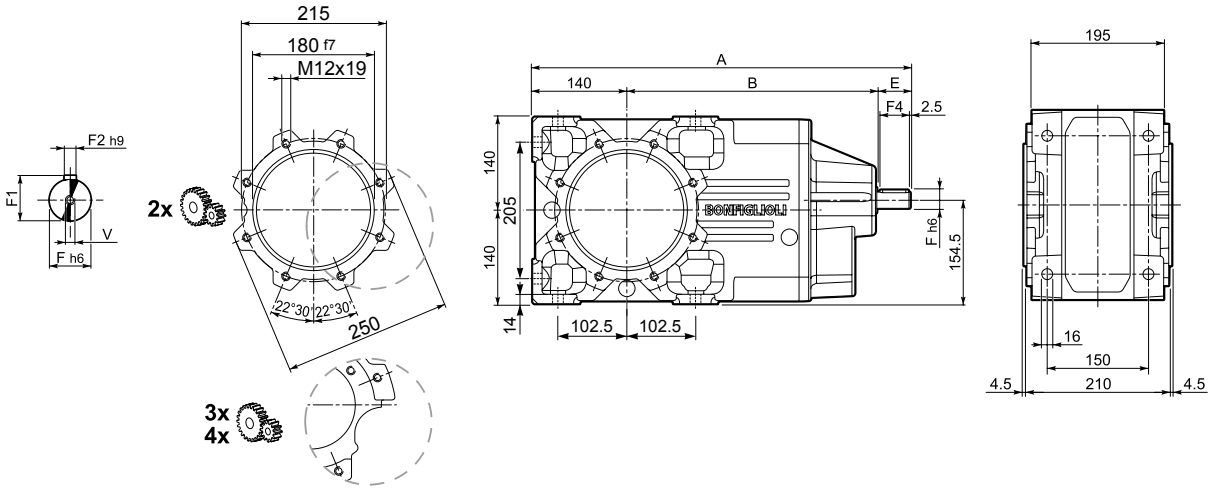

		A	B	E	F	F1	F2	F3	F4	V	Kg
A 55 2		561.5	371.5	50	24	27	8	2.5	45	M8x19	96
A 55 3	**HS**	561.5	371.5	50	24	27	8	2.5	45	M8x19	91
A 55 4		594	414	40	19	21.5	6	2.5	35	M6x16	92

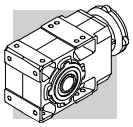

A 55...SK / SC

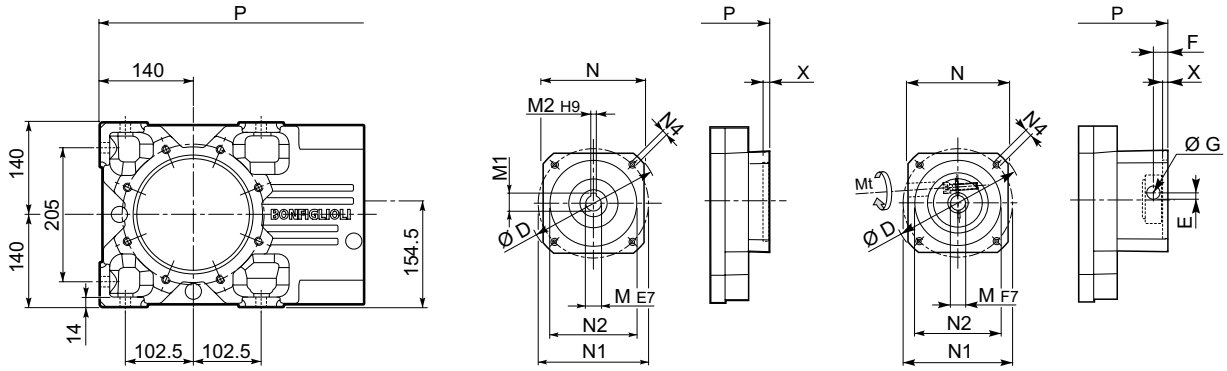

SK...

SC...

		D	M	M1	M2	N	N1	N2	N4	X	P 2/3x	P 4x	Kg
A 55 3	**SK80B**	120	14	16.3	5	96	100	80	M6x12	4	492	—	81
A 55 2/3/4	**SK80C**	120	19	21.8	6	96	100	80	M6x12	4	492	563.5	81/81/77
A 55 3/4	**SK95A**	130	14	16.3	5	102	115	95	M8x12	4	492	563.5	81/81/77
A 55 2/3/4	**SK95B**	130	19	21.8	6	102	115	95	M8x12	4	492	563.5	81/81/77
A 55 2/3/4	**SK95C**	130	24	27.3	8	102	115	95	M8x12	4	492	563.5	81/81/77
A 55 2/3/4	**SK110A**	150	19	21.8	6	120	130	110	M8x12	5	492	593	81/81/78
A 55 2/3/4	**SK110B**	150	24	27.3	8	120	130	110	M8x12	5	492	593	81/81/78
A 55 2/3/4	**SK130A**	188	24	27.3	8	142	165	130	M10x20	5	492	593	83/83/79
A 55 2/3	**SK130B**	189	32	35.3	10	160	165	130	M10x20	5	538.5	—	90/90
A 55 2/3	**SK180A**	240	32	35.3	10	192	215	180	M12x19	5	538.5	—	90/90
A 55 2/3	**SK180B**	240	38	41.3	10	192	215	180	M12x19	5	538.5	—	90/90

		Mt [Nm]	D	E	F	G	M	N	N1	N2	N4	X	P 2/3x	P 3x	Kg
A 55 3	**SC80B**	M6	15	120	15.5	14.5	17.75	14	96	100	80	M6x12	4	515.5	—	82
A 55 2/3/4	**SC80C**	M6	15	120	15.5	14.5	17.75	19	96	100	80	M6x12	4	515.5	587	82/82/78
A 55 3/4	**SC95A**	M6	15	130	16.5	15	17.75	14	102	115	95	M8x16	4	515.5	587	82/82/78
A 55 2/3/4	**SC95B**	M6	15	130	16.5	15	17.75	19	102	115	95	M8x16	4	515.5	587	82/82/78
A 55 2/3/4	**SC95C**	M6	15	130	16.5	15	17.75	24	102	115	95	M8x16	4	515.5	587	82/82/78
A 55 2/3/4	**SC110A**	M6	15	150	16.5	16	17.75	19	120	130	110	M8x16	5	515.5	587	83/83/79
A 55 2/3/4	**SC110B**	M6	15	150	16.5	16	17.75	24	120	130	110	M8x16	5	515.5	587	83/83/79
A 55 2/3/4	**SC130A**	M6	15	188	19	16	17.75	24	142	165	130	M10x20	5	515.5	587	84/84/80
A 55 2/3	**SC130B**	M8	36	189	20	17	17.75	32	160	165	130	M10x20	5	561.5	—	93/93
A 55 2/3	**SC180A**	M8	36	240	20	17.5	17.75	32	192	215	180	M12x24	5	565.5	—	93/93
A 55 2/3	**SC180B**	M8	36	240	20	17.5	17.75	38	192	215	180	M12x24	5	565.5	—	93/93

A 55...F...

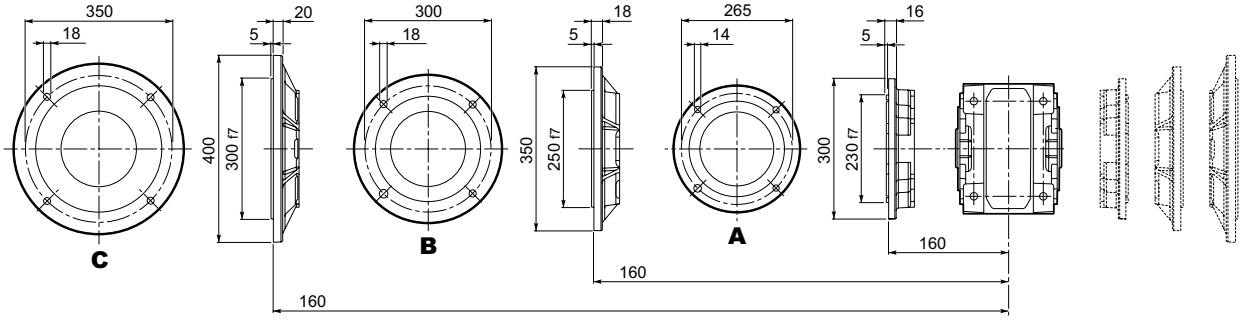

A 55

A 55...UR

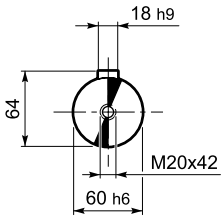

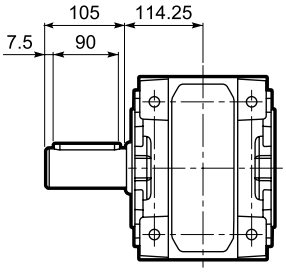

A 55...UD

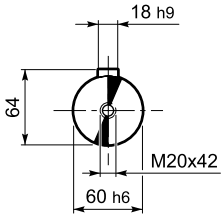

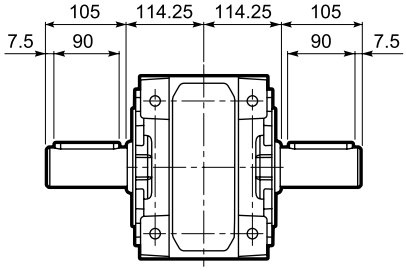

A 55...UH

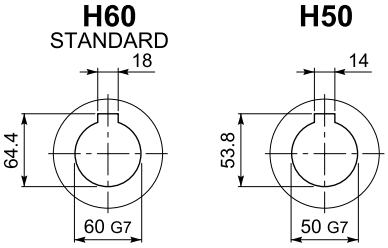

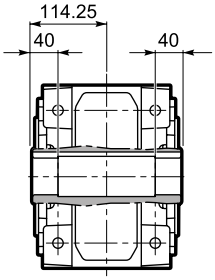

A 55...US

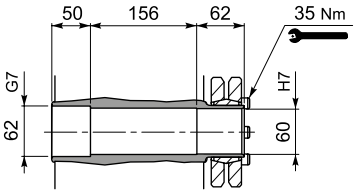

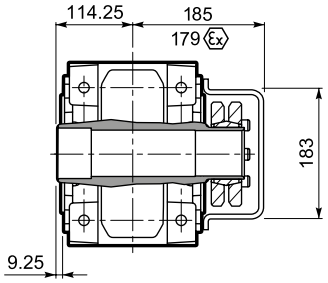

A 55...QF

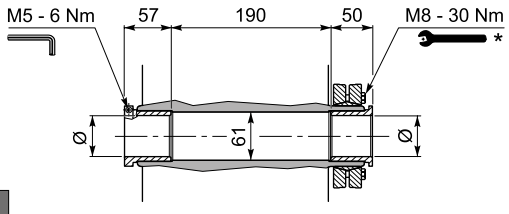

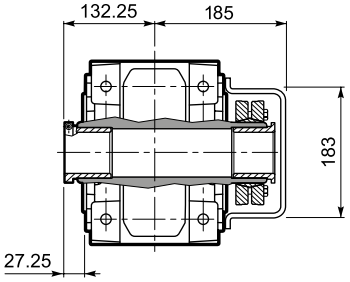

	Ø
QF55	55
QF60	60

$M_{n2\ max}$ [Nm]	
A 55 QF55	1900

A 55...UV

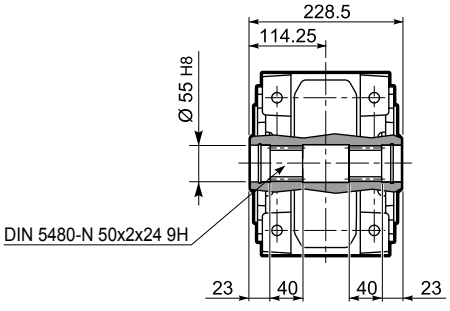

* Follow the MOUNTING INSTRUCTIONS supplied with the gearbox.

A 60...M/ME/MX

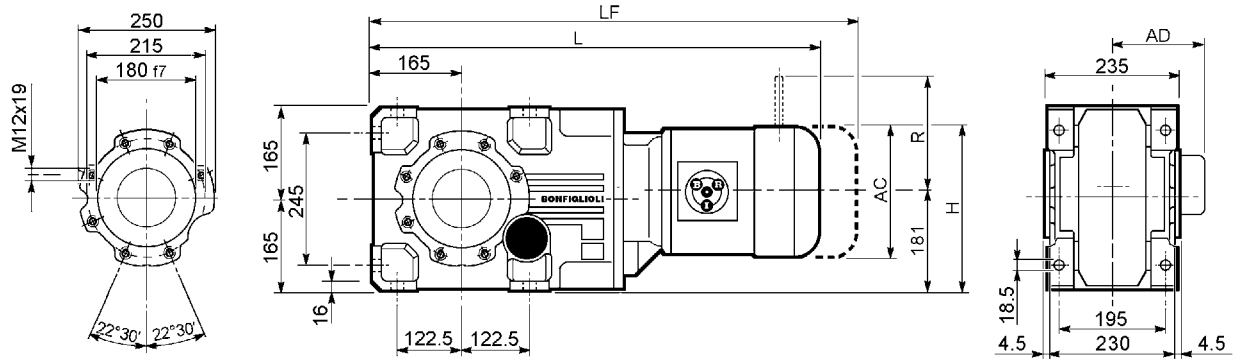

				Gearmotor - Without brake					Gearmotor - With brake			
									M...FD			
				AC	H	L	AD	Kg	LF	Kg	R	AD
A 60 2/3	S2	ME2S		156	256.5	700.5	119	98	770.5	99.6	129	143
		MX2S		156	256.5	744.5	119	103.1	816.5	106.9	129	143
	S3	ME3S		195	276	743.5	142	103	839.5	109	160	155
		MX3S		195	276	775.5	142	106	865.5	113	160	155
		ME3L		195	276	775.5	142	111	866.5	117	160	155
		MX3L		195	276	819.5	142	117	911.5	124	160	155
	S4	ME4	MX4	258	307.5	883.5	193	145	992.5	158	204	210
		ME4LB	MX4LA	258	307.5	918.5	193	153	1017.5	169	226	210
	S5	ME5S	MX5S	310	333.5	970	245	173	1110.5	224.5	266	245
		ME5L	MX5L	310	333.5	1014	245	189	1154.5	235.5	266	245
A 60 4	S1	M1		138	247.5	742	108	100	803	103	103	135
		ME1		138	247.5	742	108	100	803	103	103	135
		MX1		138	247.5	742	108	100	803	103	103	135
	S2	ME2S		156	256.5	771	119	104	841	107.5	129	143
		MX2S		156	256.5	815	119	109.1	887	114.7	129	143
	S3	ME3S		195	276	814	142	109	910	116.8	160	155
		MX3S		195	276	846	142	112	936	121.8	160	155
		ME3L		195	276	846	142	117	937	123.3	160	155
		MX3L		195	276	890	142	123	982	130.8	160	155

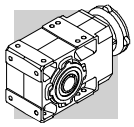

A 60...P(IEC)

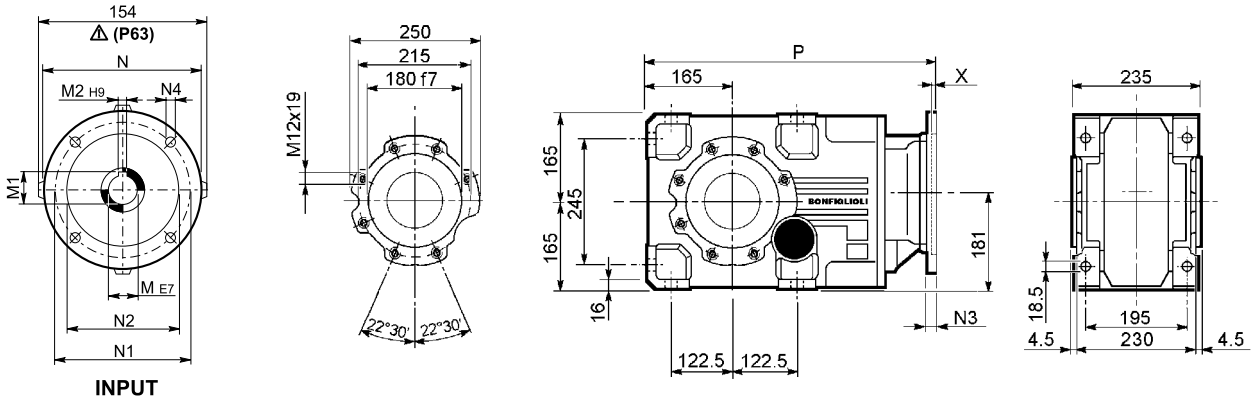

		M	M1	M2	N	N1	N2	N3	N4	X	P	Kg
A 60 3	**P63**	11	12.8	4	140	115	95	—	M8x19	4	516.5	90
A 60 3	**P71**	14	16.3	5	160	130	110	—	M8x16	4.5	516.5	90
A 60 2/3	**P80**	19	21.8	6	200	165	130	—	M10x14.5	4	536	91
A 60 2/3	**P90**	24	27.3	8	200	165	130	—	M10x14.5	4	536	91
A 60 2/3	**P100**	28	31.3	8	250	215	180	—	M12x16	4.5	546	95
A 60 2/3	**P112**	28	31.3	8	250	215	180	—	M12x16	4.5	546	95
A 60 2/3	**P132**	38	41.3	10	300	265	230	16	14	5	582.5	104
A 60 2/3	**P160**	42	45.3	12	350	300	250	23	18	5.5	633	121
A 60 2/3	**P180**	48	51.8	14	350	300	250	23	18	5.5	633	121
A 60 4	**P63**	11	12.8	4	140	115	95	—	M8x19	4	587	88
A 60 4	**P71**	14	16.3	5	160	130	110	—	M8x16	4.5	587	88
A 60 4	**P80**	19	21.8	6	200	165	130	—	M10x14.5	4	606.5	90
A 60 4	**P90**	24	27.3	8	200	165	130	—	M10x14.5	4	606.5	90
A 60 4	**P100**	28	31.3	8	250	215	180	—	M12x16	4.5	616.5	94
A 60 4	**P112**	28	31.3	8	250	215	180	—	M12x16	4.5	616.5	94

A 60...HS

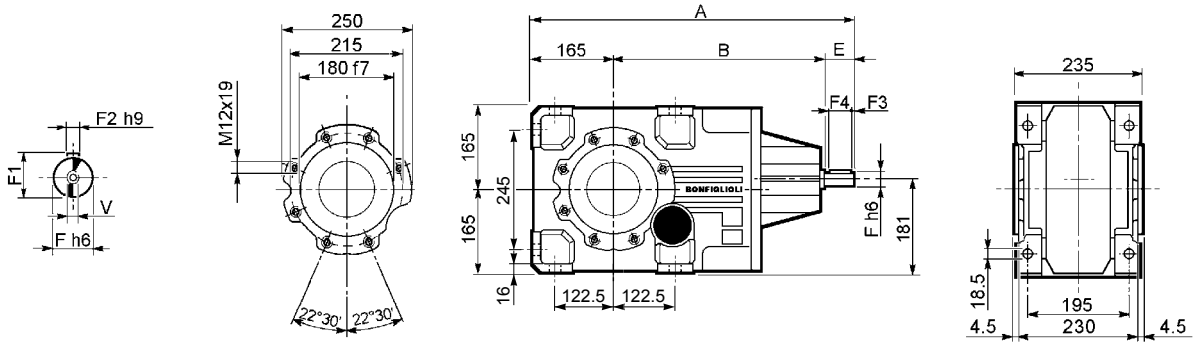

		A	B	E	F	F1	F2	F3	F4	V	Kg
A 60 2		633	408	60	28	31	8	5.0	50	M10x22	106
A 60 3	**HS**	633	408	60	28	31	8	5.0	50	M10x22	106
A 60 4		676	461	50	24	27	8	2.5	45	M8x19	112

A 60...SK / SC

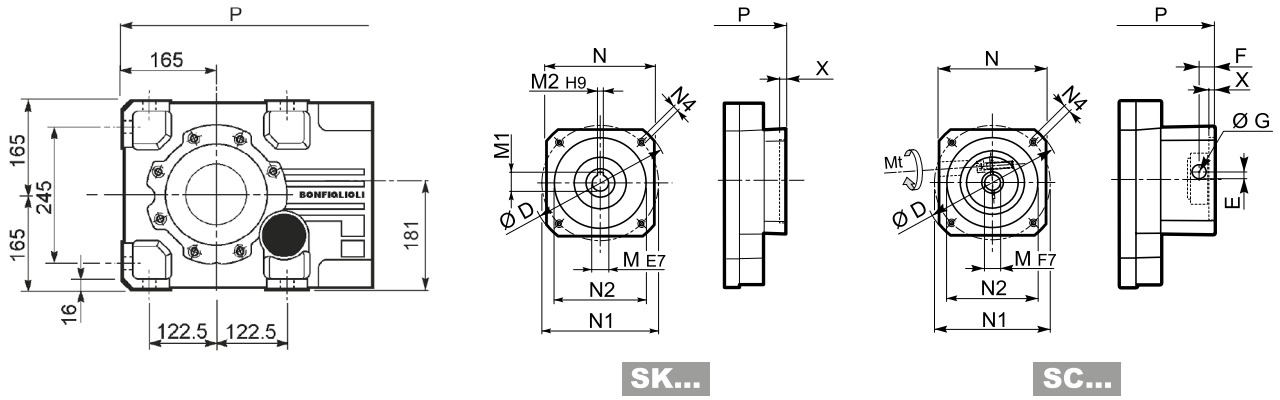

		D	M	M1	M2	N	N1	N2	N4	X	P 2/3x	P 4x	Kg
A 60 4	**SK80B**	120	14	16.3	5	96	100	80	M6x12	4	—	606.5	89
A 60 2/3/4	**SK80C**	120	19	21.8	6	96	100	80	M6x12	4	536	606.5	93/93/92
A 60 2/3/4	**SK95A**	130	14	16.3	5	102	115	95	M8x12	4	536	606.5	93/93/92
A 60 2/3/4	**SK95B**	130	19	21.8	6	102	115	95	M8x12	4	536	606.5	93/93/92
A 60 2/3/4	**SK95C**	130	24	27.3	8	102	115	95	M8x12	4	536	606.5	93/93/92
A 60 2/3/4	**SK110A**	140	19	21.8	6	120	130	110	M8x12	5	536	606.5	93/93/92
A 60 2/3/4	**SK110B**	140	24	27.3	8	120	130	110	M8x12	5	536	606.5	93/93/92
A 60 2/3/4	**SK130A**	188	24	27.3	8	142	165	130	M10x20	5	536	606.5	97/97/103
A 60 2/3	**SK130B**	189	32	35.3	10	160	165	130	M10x20	5	582.5	—	102/102
A 60 2/3	**SK180A**	240	32	35.3	10	192	215	180	M12x19	5	582.5	—	102/102
A 60 2/3	**SK180B**	240	38	41.3	10	192	215	180	M12x19	5	582.5	—	102/102

			Mt [Nm]	D	E	F	G	M	N	N1	N2	N4	X	P 2/3x	P 3x	Kg
A 60 4	**SC80B**	M6	15	120	15.5	14.5	17.75	14	96	100	80	M6x12	4	—	630	90
A 60 2/3/4	**SC80C**	M6	15	120	15.5	14.5	17.75	19	96	100	80	M6x12	4	559.5	630	94/94/93
A 60 2/3/4	**SC95A**	M6	15	130	16.5	15	17.75	14	102	115	95	M8x16	4	559.5	630	94/94/93
A 60 2/3/4	**SC95B**	M6	15	130	16.5	15	17.75	19	102	115	95	M8x16	4	559.5	630	94/94/93
A 60 2/3/4	**SC95C**	M6	15	130	16.5	15	17.75	24	102	115	95	M8x16	4	559.5	630	94/94/93
A 60 2/3/4	**SC110A**	M6	15	140	16.5	16	17.75	19	120	130	110	M8x16	5	559.5	630	95/95/93
A 60 2/3/4	**SC110B**	M6	15	140	16.5	16	17.75	24	120	130	110	M8x16	5	559.5	630	95/95/93
A 60 2/3/4	**SC130A**	M6	15	188	19	16	17.75	24	142	165	130	M10x20	5	559.5	630	96/96/104
A 60 2/3	**SC130B**	M8	36	189	20	17	17.75	32	160	165	130	M10x20	5	605.5	—	105/105
A 60 2/3	**SC180A**	M8	36	240	20	17.5	17.75	32	192	215	180	M12x24	5	609.5	—	105/105
A 60 2/3	**SC180B**	M8	36	240	20	17.5	17.75	38	192	215	180	M12x24	5	609.5	—	105/105

A 60...F...

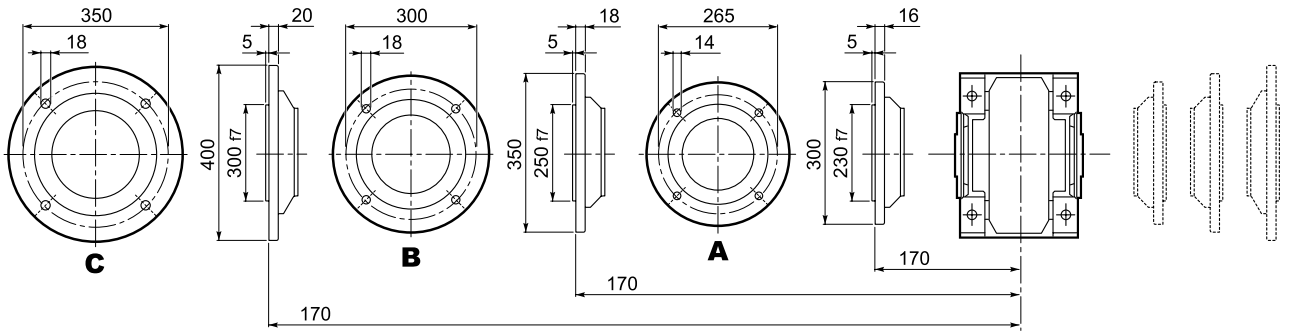

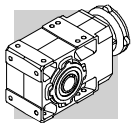

A 60

A 60...UR

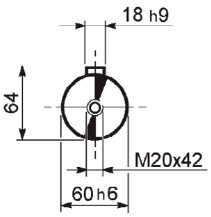

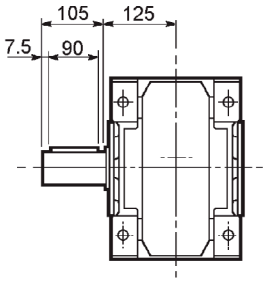

A 60...UD

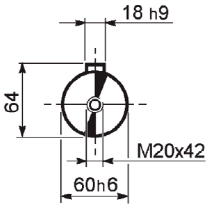

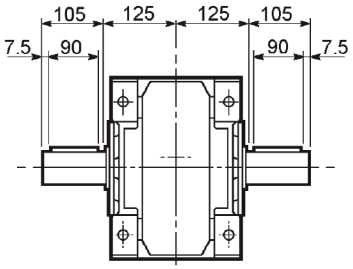

A 60...UH

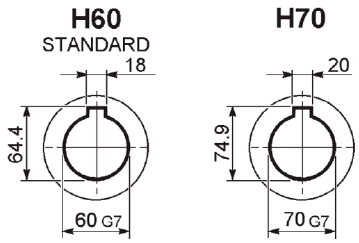

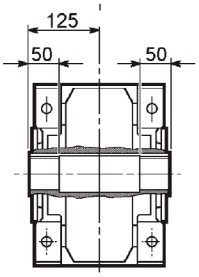

A 60...US

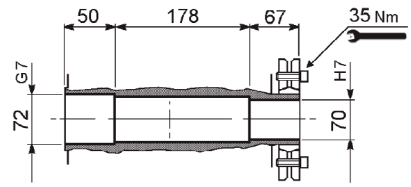

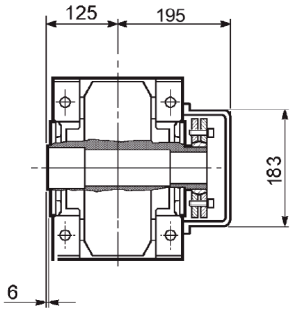

A 60...QF

	Ø
QF60	60
QF65	65
QF70	70

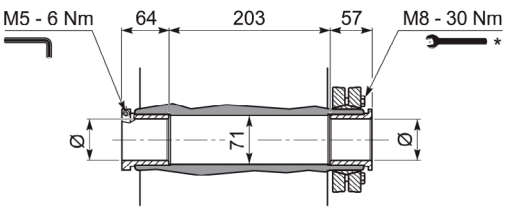

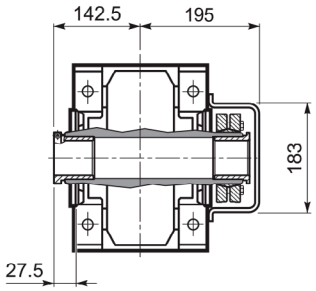

A 60...UV

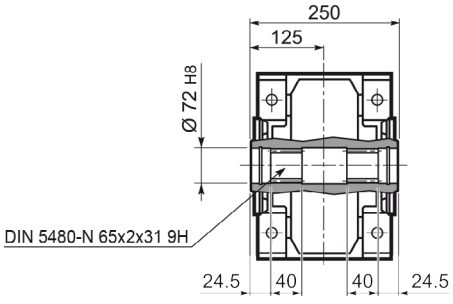

* Follow the MOUNTING INSTRUCTIONS supplied with the gearbox.

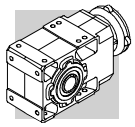

A 70...M/ME/MX

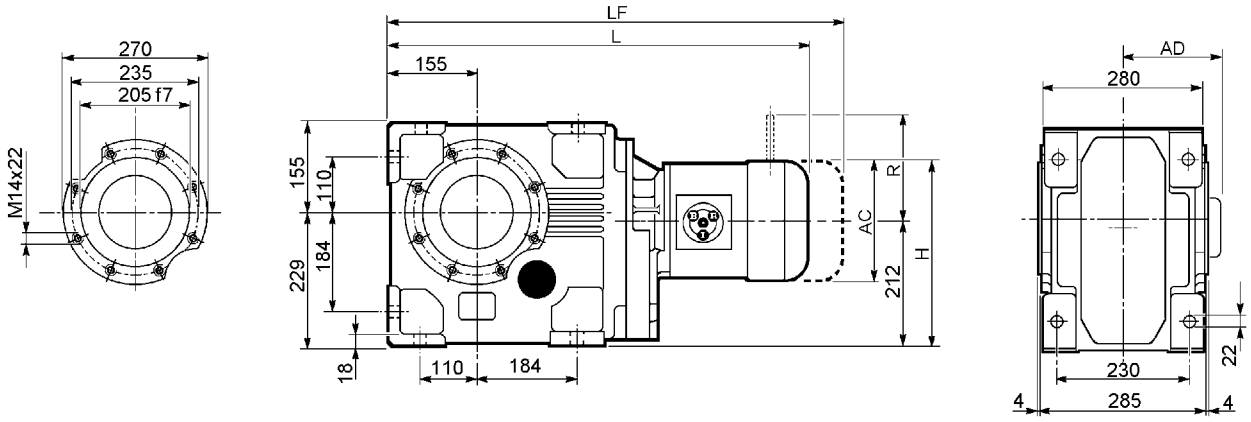

				Gearmotor - Without brake					Gearmotor - With brake			
									M...FD			
				AC	H	L	AD	Kg	LF	Kg	R	AD
A 70 3	S2	ME2S		156	290	688.5	119	152	758.5	155.9	129	143
		MX2S		156	290	732.5	119	157.1	804.5	163.1	129	143
	S3	ME3S		195	309.5	731.5	142	158.5	827.5	165.2	160	155
		MX3S		195	309.5	763.5	142	161.5	853.5	170.2	160	155
		ME3L		195	309.5	763.5	142	164	854.5	171.7	160	155
		MX3L		195	309.5	807.5	142	170	899.5	179.2	160	155
	S4	ME4	MX4	258	341	872.5	193	198	1012.5	211	204	210
		ME4LB	MX4LA	258	341	907.5	193	206	1006.5	223.2	226	210
	S5	ME5S	MX5S	310	367	958	245	226	1098.5	283.2	266	245
		ME5L	MX5L	310	367	1002	245	242	1142.5	294.2	266	245
A 70 4	S1	M1		138	281	710.5	108	152	771.5	155	103	135
		ME1		138	281	710.5	108	152	771.5	155	103	135
		MX1		138	281	710.5	108	152	771.5	155	103	135
	S2	ME2S		156	290	739.5	119	156	809.5	159.5	129	143
		MX2S		156	290	783.5	119	161.1	855.5	166.7	129	143
	S3	ME3S		195	309.5	782.5	142	162.5	878.5	168.8	160	155
		MX3S		195	309.5	814.5	142	165.5	904.5	173.8	160	155
		ME3L		195	309.5	814.5	142	168	905.5	175.5	160	155
		MX3L		195	309.5	858.5	142	174	950.5	182.8	160	155
	S4	ME4	MX4	258	341	922.5	193	202	1031.5	215	204	210
		ME4LB	MX4LA	258	341	957.5	193	210	1056.5	226.8	226	210

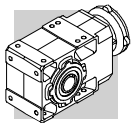

A 70...P (IEC)

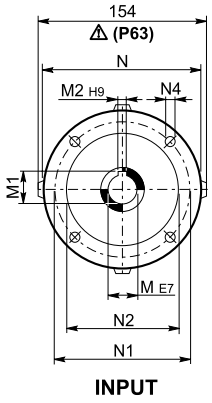

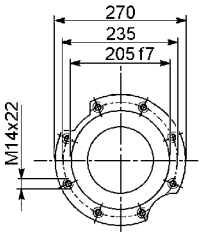

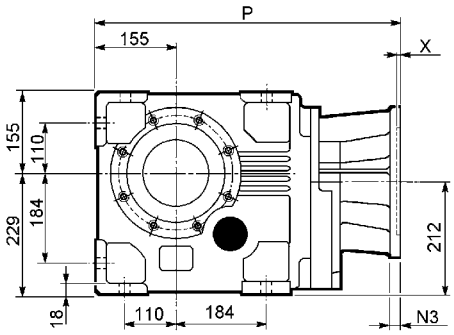

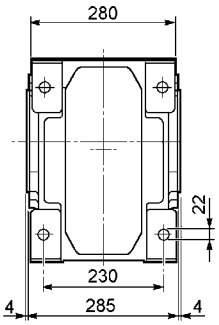

		M	M1	M2	N	N1	N2	N3	N4	X	P	Kg
A 70 3	**P80**	19	21.8	6	200	165	130	—	M10x14.5	4	524	144
A 70 3	**P90**	24	27.3	8	200	165	130	—	M10x14.5	4	524	144
A 70 3	**P100**	28	31.3	8	250	215	180	—	M12x16	4.5	534	146
A 70 3	**P112**	28	31.3	8	250	215	180	—	M12x16	4.5	534	146
A 70 3	**P132**	38	41.3	10	300	265	230	16	14	5	570.5	154
A 70 3	**P160**	42	45.3	12	350	300	250	23	18	6	626	169
A 70 3	**P180**	48	51.8	14	350	300	250	23	18	6	626	169
A 70 3	**P200**	55	59.3	16	400	350	300	—	M16x25	7	651	179
A 70 4	**P63**	11	12.8	4	140	115	95	—	M8x19	4	555.5	146
A 70 4	**P71**	14	16.3	5	160	130	110	—	M8x16	4.5	555.5	146
A 70 4	**P80**	19	21.8	6	200	165	130	—	M10x14.5	4	575	147
A 70 4	**P90**	24	27.3	8	200	165	130	—	M10x14.5	4	575	147
A 70 4	**P100**	28	31.3	8	250	215	180	—	M12x16	4.5	585	148
A 70 4	**P112**	28	31.3	8	250	215	180	—	M12x16	4.5	585	148
A 70 4	**P132**	38	41.3	10	300	265	230	16	14	5	618.5	157

A 70...HS

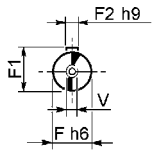

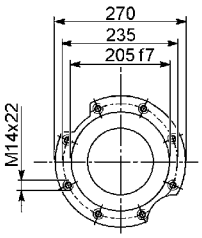

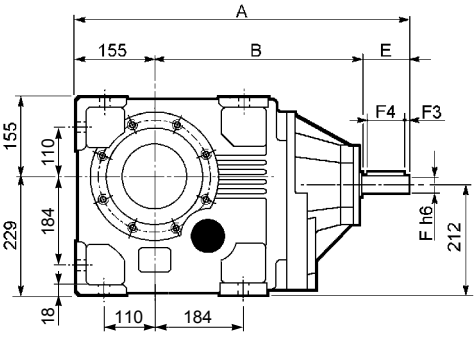

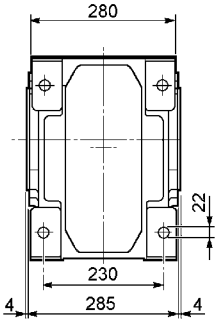

		A	B	E	F	F1	F2	F3	F4	V	Kg
A 70 3	**HS**	708.5	443.5	110	42	45	12	10	90	M12x28	165
A 70 4		644.5	439.5	50	24	27	8	2.5	45	M8x19	149

A 70

A 70...UR

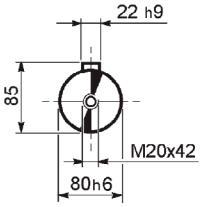

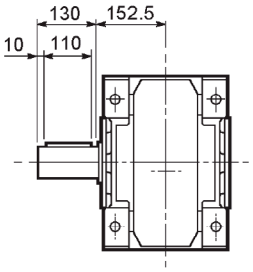

A 70...UD

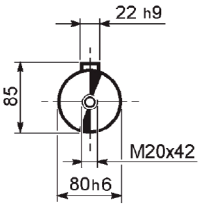

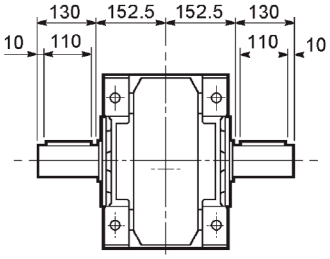

A 70...UH

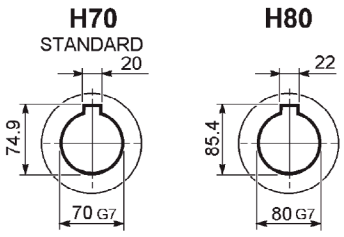

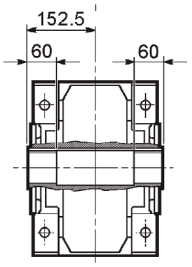

A 70...US

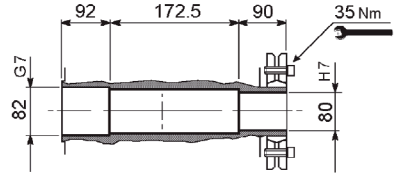

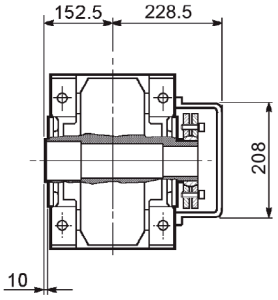

A 70...F...

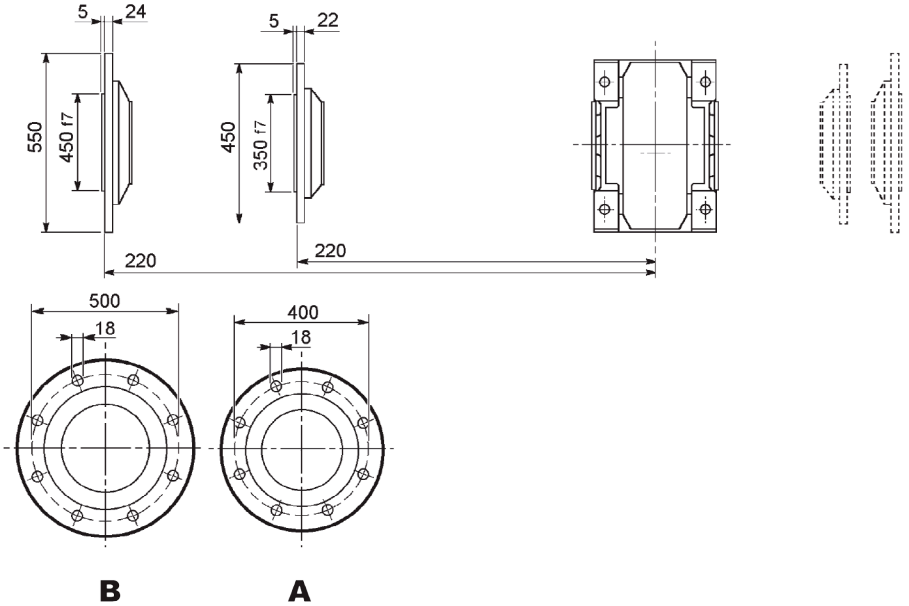

A 80...M/ME/MX

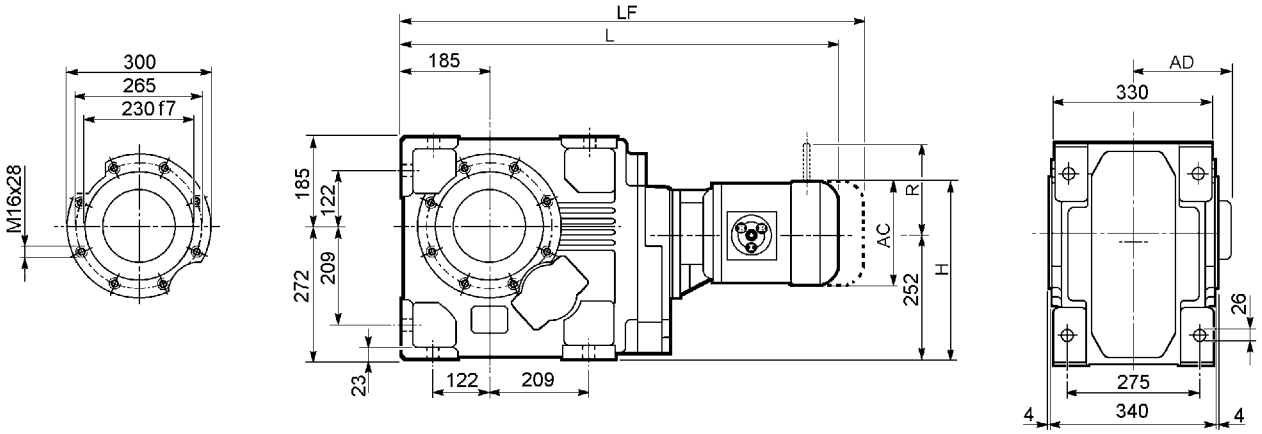

				Gearmotor - Without brake					Gearmotor - With brake			
									M...FD			
				AC	H	L	AD	Kg	LF	Kg	R	AD
A 80 3	S3	ME3S		195	349.5	809.5	142	257.5	905.5	264	160	155
		MX3S		195	349.5	841.5	142	260.5	934.5	269	160	155
		ME3L		195	349.5	841.5	142	264	932.5	270.5	160	155
		MX3L		195	349.5	885.5	142	270	976.5	278	160	155
	S4	ME4	MX4	258	381	949.5	193	298	1058.5	311	204	210
		ME4LB	MX4LA	258	381	984.5	193	306	1083.5	322	226	210
	S5	ME5S	MX5S	310	407	1036	245	326	1176.5	382	266	245
		ME5L	MX5L	310	407	1080	245	342	1220.5	393	266	245
A 80 4	S1	M1		138	321	800.5	108	246	861.5	249	103	135
		ME1		138	321	800.5	108	246	851.5	249	103	135
		MX1		138	321	800.5	108	246	851.5	249	103	135
	S2	ME2S		156	330	829.5	119	250	946.5	253.7	129	143
		MX2S		156	330	873.5	119	255.1	992.5	260.9	129	143
	S3	ME3S		195	349.5	872.5	142	256.5	1000.5	263	160	155
		MX3S		195	349.5	904.5	142	259.5	1029.5	268	160	155
		ME3L		195	349.5	904.5	142	262	1027.5	269.5	160	155
		MX3L		195	349.5	948.5	142	268	1071.5	277	160	155
	S4	ME4	MX4	258	381	1012.5	193	296	1144.5	309	204	210
		ME4LB	MX4LA	258	381	1047.5	193	304	1169.5	321	226	210

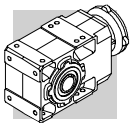

A 80...P(IEC)

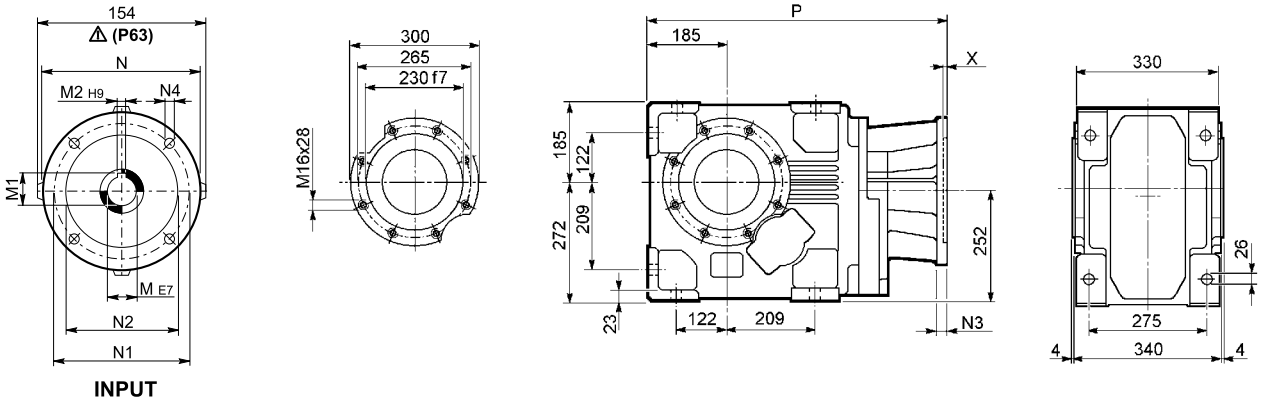

		M	M1	M2	N	N1	N2	N3	N4	X	P	Kg
A 80 3	**P80**	19	21.8	6	200	165	130	—	M10x14.5	4	602	243
A 80 3	**P90**	24	27.3	8	200	165	130	—	M10x14.5	4	602	243
A 80 3	**P100**	28	31.3	8	250	215	180	—	M12x16	4.5	612	245
A 80 3	**P112**	28	31.3	8	250	215	180	—	M12x16	4.5	612	245
A 80 3	**P132**	38	41.3	10	300	265	230	16	14	5	648.5	253
A 80 3	**P160**	42	45.3	12	350	300	250	23	18	6	704	268
A 80 3	**P180**	48	51.8	14	350	300	250	23	18	6	704	268
A 80 3	**P200**	55	59.3	16	400	350	300	—	M16x25	7	729	279
A 80 3	**P225**	60	64.4	18	450	400	350	25	18	6	774.5	298
A 80 4	**P63**	11	12.8	4	140	115	95	—	M8x19	4	645.5	248
A 80 4	**P71**	14	16.3	5	160	130	110	—	M8x16	4.5	645.5	248
A 80 4	**P80**	19	21.8	6	200	165	130	—	M10x14.5	4	665	249
A 80 4	**P90**	24	27.3	8	200	165	130	—	M10x14.5	4	665	249
A 80 4	**P100**	28	31.3	8	250	215	180	—	M12x16	4.5	675	250
A 80 4	**P112**	28	31.3	8	250	215	180	—	M12x16	4.5	675	250
A 80 4	**P132**	38	41.3	10	300	265	230	16	M12x16	5	711.5	259

A 80...HS

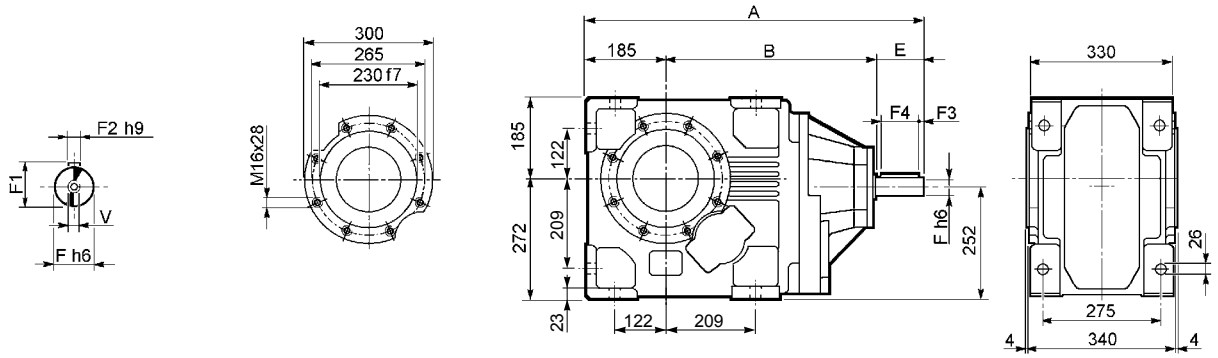

		A	B	E	F	F1	F2	F3	F4	V	Kg
A 80 3	**HS**	786.5	491.5	110	42	45	12	10	90	M12x28	265
A 80 4		735	500	50	24	27	8	2.5	45	M8x19	250

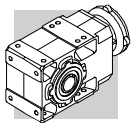

A 80

A 80...UR

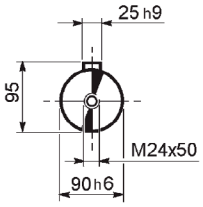

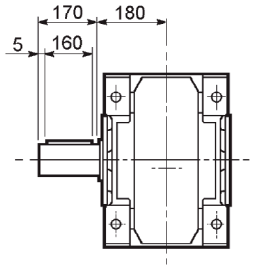

A 80...UD

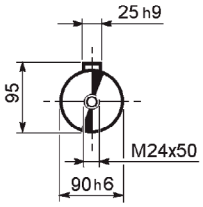

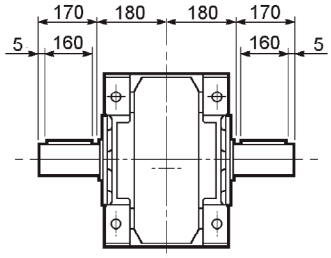

A 80...UH

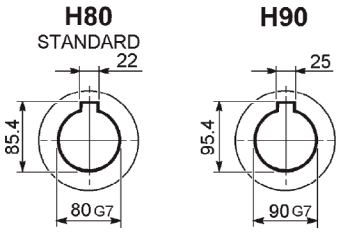

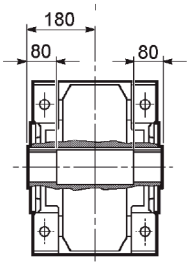

A 80...US

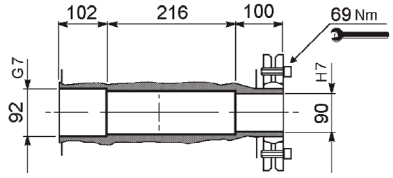

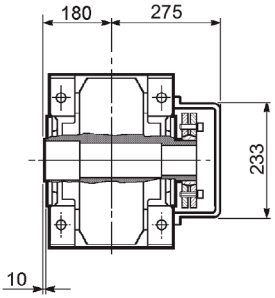

A 80...F...

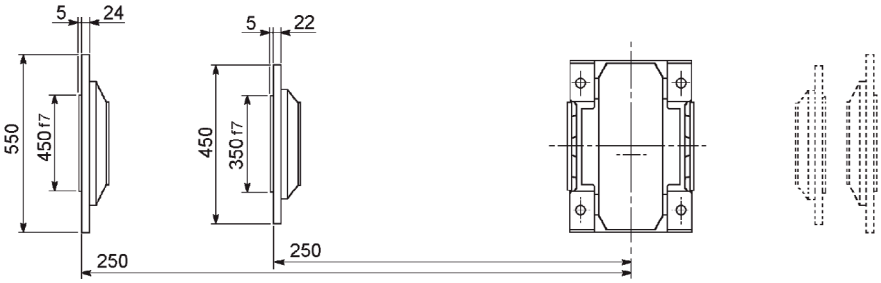

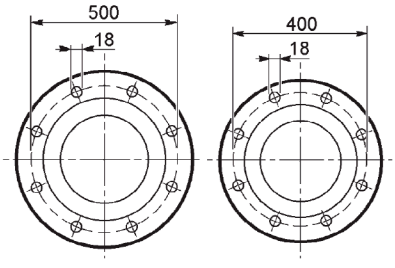

A 90...M/ME/MX

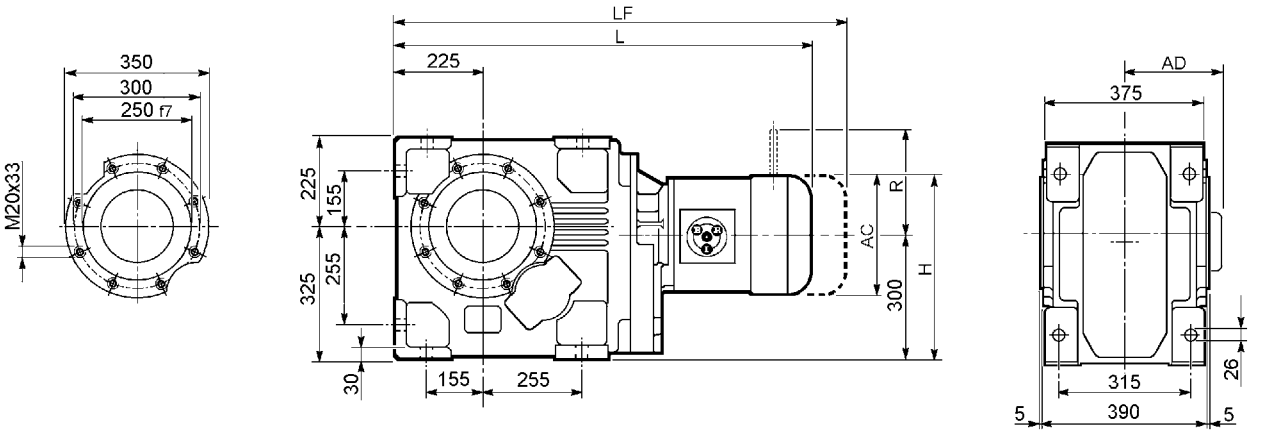

				Gearmotor - Without brake					Gearmotor - With brake			
									M...FD			
				AC	H	L	AD	Kg	LF	Kg	R	AD
A 90 3	S3	ME3S		195	397.5	930.5	142	414.5	1026.5	420.5	160	155
		MX3S		195	397.5	962.5	142	413.5	1055.5	420.5	160	155
		ME3L		195	397.5	962.5	142	420	1053.5	426	160	155
		MX3L		195	397.5	1006.5	142	426	1097.5	433	160	155
	S4	ME4	MX4	258	429	1070.5	193	454	1179.5	467	204	210
		ME4LB	MX4LA	258	429	1105.5	193	462	1204.5	478	226	210
	S5	ME5S	MX5S	310	455	1157	245	482	1297.5	532.5	266	245
		ME5L	MX5L	310	455	1201	245	498	1341.5	543.5	226	245
A 90 4	S1	M1		138	369	941.5	108	412	1002.5	414,7	103	135
		ME1		138	369	941.5	108	412	1002.5	414.7	103	135
		MX1		138	369	941.5	108	412	1002.5	414.7	103	135
	S2	ME2S		156	378	970.5	119	422	1055.5	423.6	129	143
		MX2S		156	378	1014.5	119	427.1	1101.5	430.8	129	143
	S3	ME3S		195	397.5	1013.5	142	428.5	1109.5	434.5	160	155
		MX3S		195	397.5	1045.5	142	431.5	1138.5	438.5	160	155
		ME3L		195	397.5	1045.5	142	434	1136.5	440	160	155
		MX3L		195	397.5	1089.5	142	440	1181.5	447	160	155
	S4	ME4	MX4	258	429	1153.5	193	468	1262.5	481	204	210
		ME4LB	MX4LA	258	429	1188.5	193	476	1287.5	489	226	210

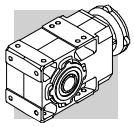

A 90...P (IEC)

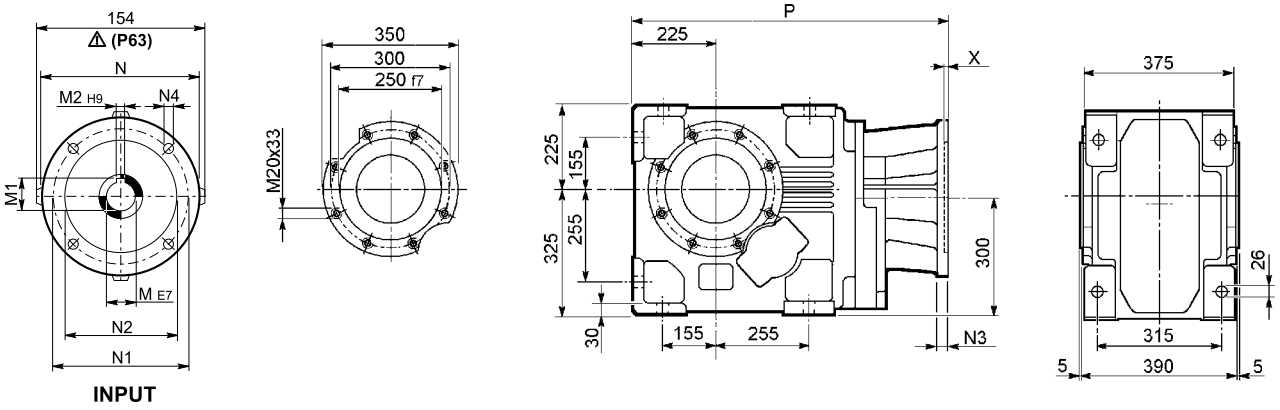

		M	M1	M2	N	N1	N2	N3	N4	X	P	Kg
A 90 3	**P80**	19	21.8	6	200	165	130	—	M10x14.5	4	723	400
A 90 3	**P90**	24	27.3	8	200	165	130	—	M10x14.5	4	723	400
A 90 3	**P100**	28	31.3	8	250	215	180	—	M12x16	4.5	733	401
A 90 3	**P112**	28	31.3	8	250	215	180	—	M12x16	4.5	733	401
A 90 3	**P132**	38	41.3	10	300	265	230	16	14	5	769.5	409
A 90 3	**P160**	42	45.3	12	350	300	250	23	18	6	825	428
A 90 3	**P180**	48	51.8	14	350	300	250	23	18	6	825	429
A 90 3	**P200**	55	59.3	16	400	350	300	—	M16x25	7	850	436
A 90 3	**P225**	60	64.4	18	450	400	350	30	18	6	895.5	472
A 90 3	**P250**	65	69.4	18	550	500	450	30	18	6	925.5	475
A 90 4	**P63**	11	12.8	4	140	115	95	—	M8x19	4	786.5	411
A 90 4	**P71**	14	16.3	5	160	130	110	—	M8x16	4.5	786.5	412
A 90 4	**P80**	19	21.8	6	200	165	130	—	M10x14.5	4	806	413
A 90 4	**P90**	24	27.3	8	200	165	130	—	M10x14.5	4	806	413
A 90 4	**P100**	28	31.3	8	250	215	180	—	M12x16	4.5	816	415
A 90 4	**P112**	28	31.3	8	250	215	180	—	M12x16	4.5	816	415
A 90 4	**P132**	38	41.3	10	300	265	230	16	14	5	852.5	423
A 90 4	**P160**	42	45.3	12	350	300	250	23	18	5.5	903	434
A 90 4	**P180**	48	51.8	14	350	300	250	23	18	5.5	903	434

A 90...HS

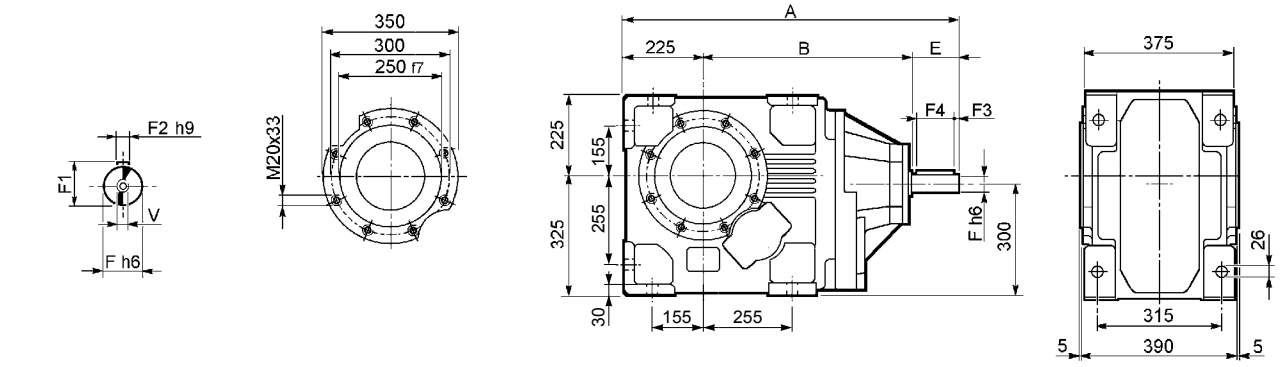

		A	B	E	F	F1	F2	F3	F4	V	Kg
A 90 3	**HS**	1009	644	140	60	64	18	10	120	M16x36	465
A 90 4		875.5	600.5	50	24	27	8	2.5	45	M8x19	415

A 90...UR

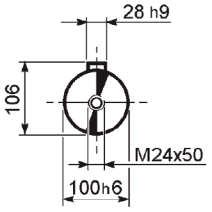

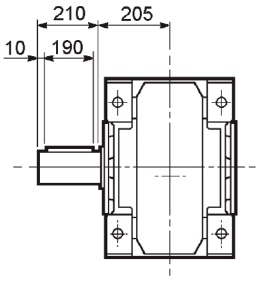

A 90...UD

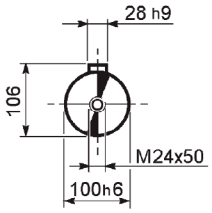

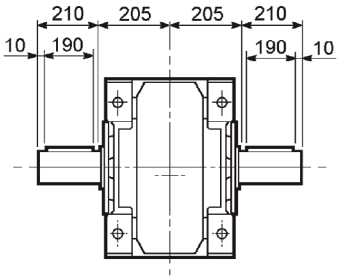

A 90...UH

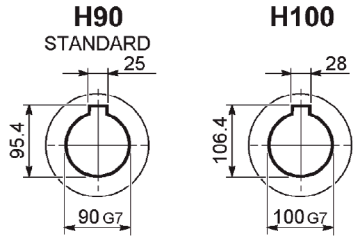

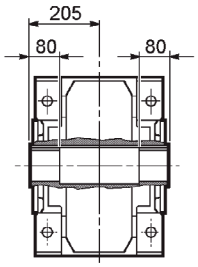

A 90...US

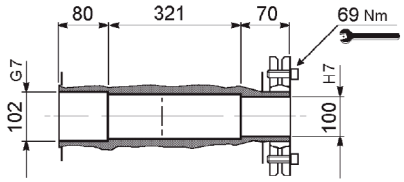

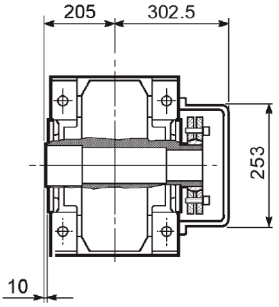

A 90...F...

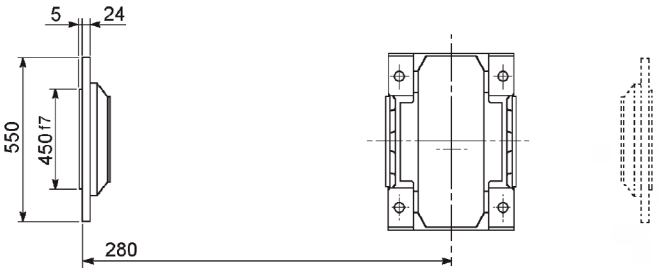

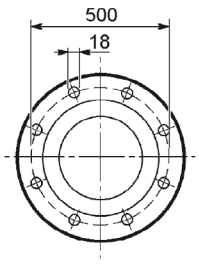

A

44 GEARBOXES DIMENSIONS WITH TORQUE ARM

A 05 ... A 60

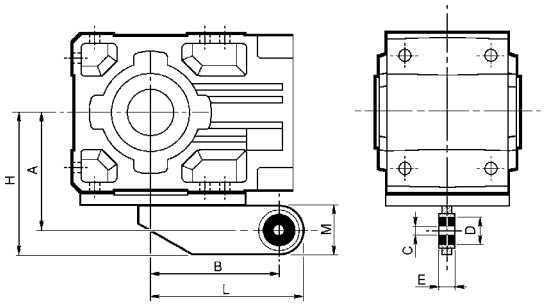

A 70 ... A 90

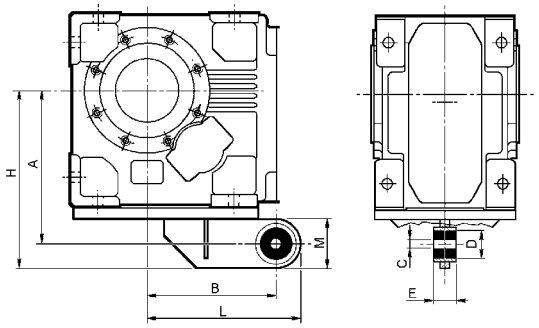

	A	B	C	D	E	H	L	M
A05	90.5	80	10	30	20	115.5	105	50
A10	108	118	10	30	20	138	148	60
A20	118	137	10	30	20	148	167	60
A30	135	150	20	40	25	170	185	70
A35	145	165	20	40	25	180	200	70
A41	157	200	20	40	25	192	235	70
A50	200	250	32	56	40	245	295	90
A55	200	250	32	56	40	245	295	90
A60	225	300	32	56	40	270	345	90
A70	289	250	32	56	40	334	295	90
A80	357	300	42	78	60	422	365	130
A90	410	350	42	78	60	475	415	130

45 GEARBOXES DIMENSIONS WITH PROTECTION CAP

A 05 ... A 90

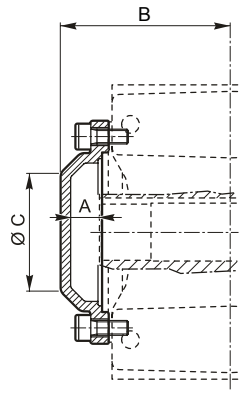

	A	Ø C	B
A 05	17.5	36	73.5
A 10	20.5	60	84.5
A 20	20	75	94
A 30	20	75	104
A 35	19.5	80	114
A 41	21	110	120
A 50	26	100	148.5
A 55	27	100	149
A 60	25	100	158
A 70	33.5	120	193.5
A 80	38	140	228
A 90	43	152	258

Dimensions common to the other configurations are provided from page 299 to page 342

46 CUSTOMER' SHAFT

Make the driven shaft to be coupled to the gear unit's output shaft from a good quality steel, respecting the dimensions given in the table.

A device such as that illustrated below should also be installed to secure the shaft axially. Take care to verify and dimension the various components to suit the needs of the application.

UH_

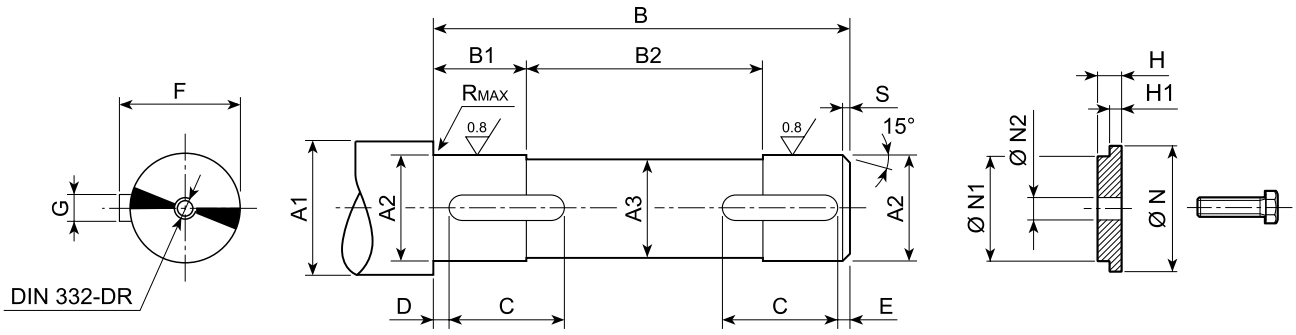

	A1	A2	A3	B	B1	B2	C	D	E	F	G	R	S	UNI 6604	N	N1	N2	H	H1	UNI 5739
A05 UH25	≥ 30	25 h7	24	102	21	62	20	2	2	28	8 h9	0.5	1.5	8x7x20 A	35	25 d9	9	7	5.5	M8x25
A10 UH30	≥ 35	30 h7	29	118	16	87	20	2	2	33	8 h9	0.5	1.5	8x7x20 A	35	30 d9	11	8.5	7	M10x30
A10 UH25	≥ 30	25 h7	24	118	16	87	20	2	2	28	8 h9	0.5	1.5	8x7x20 A	30÷35	25 d9	9	7	5.5	M8x25
A20 UH35	≥ 42	35 h7	34	138	20	98	20	2	2	38	10 h9	0.5	1.5	10x8x20 A	42	35 d9	11	8.5	7	M10x30
A20 UH30	≥ 35	30 h7	29	138	20	98	25	2	2	33	8 h9	0.5	1.5	8x7x25 A	35÷42	30 d9	11	8.5	7	M10x30
A30 UH40	≥ 47	40 h7	39	158	23	112	30	2	2	43	12 h9	0.5	1.5	12x8x30 A	47	40 d9	14	8.5	7	M12x35
A30 UH35	≥ 42	35 h7	34	158	23	112	30	2	2	38	10 h9	0.5	1.5	10x8x30 A	42÷47	35 d9	11	8.5	7	M10x30
A35 UH40	≥ 47	40 h7	39	175	33	109	40	2	2	43	12 h9	1	1.5	12x8x40 A	47	40 d9	14	8.5	7	M12x35
A35 UH35	≥ 42	35 h7	34	175	33	109	40	2	2	38	10 h9	1	1.5	10x8x40 A	42÷47	35 d9	11	8.5	7	M10x30
A41 UH45	≥ 52	45 h7	44	184	28	128	45	2.5	2.5	48.5	14 h9	1	2	14x9x45 A	52	45 d9	14	8.5	7	M12x35
A41 UH40	≥ 47	40 h7	39	184	28	128	50	2.5	2.5	43	12 h9	1	2	12x8x50 A	47÷52	40 d9	14	8.5	7	M12x35
A50 UH55	≥ 63	55 h7	54	226	37.5	151	55	2.5	2.5	59	16 h9	1	2	16x10x55 A	63	55 d9	22	10	8	M20x50
A50 UH50	≥ 57	50 h7	49	226	37.5	151	65	2.5	2.5	53.5	14 h9	1	2	14x9x65 A	57÷63	50 d9	18	10	8	M16x45
A55 UH60	≥ 70	60 h7	59	226	37.5	151	65	2.5	2.5	64	18 h9	2	2	18x11x65 A	70	60 d9	22	10	8	M20x50
A55 UH50	≥ 60	50 h7	49	226	37.5	151	75	2.5	2.5	53.5	14 h9	2	2	14x9x75 A	60÷70	50 d9	18	10	8	M16x45
A60 UH70	≥ 78	70 h7	69	248	48	152	70	2.5	2.5	74.5	20 h9	2.5	2	20x12x70 A	78	70 d9	22	10	8.5	M20x50
A60 UH60	≥ 68	60 h7	59	248	48	152	80	2.5	2.5	64	18 h9	2.5	2	18x11x80 A	68÷78	60 d9	22	10	8.5	M20x50
A70 UH80	v89	80 h7	79	303	58	187	90	3	3	85	22 h9	2.5	2.5	22x14x90 A	89	80 d9	22	10	8.5	M20x50
A70 UH70	≥ 78	70 h7	69	303	58	187	110	3	3	74.5	20 h9	2.5	2.5	20x12x110 A	78÷89	70 d9	22	10	8.5	M20x50
A80 UH90	≥ 99	90 h7	89	358	78	202	120	3	3	95	25 h9	2.5	2.5	25x14x120 A	99	90 d9	26	22	20.5	M24x70
A80 UH80	≥ 89	80 h7	79	358	78	202	130	3	3	85	22 h9	2.5	2.5	22x14x130 A	89÷99	80 d9	22	10	8.5	M20x50
A90 UH100	≥ 111	100 h7	99	408	78	252	160	3	3	106	28 h9	2.5	2.5	28x16x160 A	111	100 d9	26	22	20.5	M24x70
A90 UH90	≥ 99	90 h7	89	408	78	252	190	3	3	95	25 h9	2.5	2.5	25x14x190 A	99÷111	90 d9	26	22	20.5	M24x70

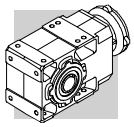

US

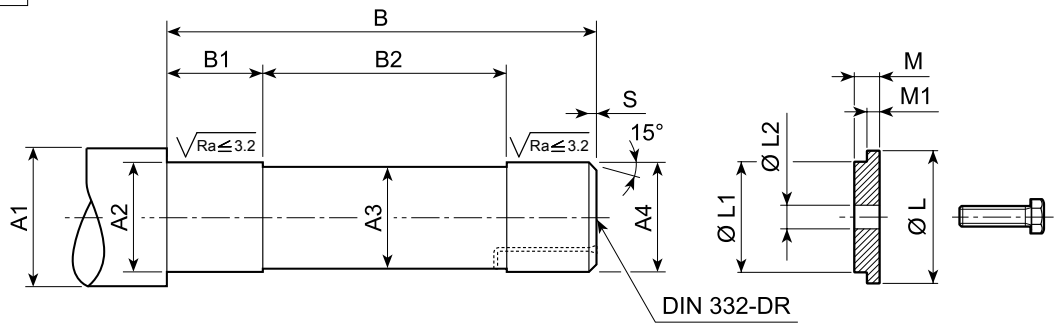

	A1	A2	A3	A4	B	B1	B2	R	S	L	L1	L2	M	M1	UNI 5739
A 05	≥ 35	27 h7	24	25 h6	129.5	32	63.5	0.5	1.5	29.5	25 d9	11	8.5	7	M10x30
A 10	≥ 42	32 h7	29	30 h6	147.5	34	77.5	0.5	1.5	35.5	30 d9	11	8.5	7	M10x30
A 20	≥ 48	37 h7	34	35 h6	170	40	89	0.5	1.5	43	35 d9	14	8.5	7	M12x35
A 30	≥ 54	42 h7	39	40 h6	191.5	48	95.5	0.5	1.5	49	40 d9	18	10	8.5	M16x45
A 35	≥ 54	42 h7	39	40 h6	208.5	48	112.5	0.5	1.5	49	40 d9	18	10	8.5	M16x45
A 41	≥ 60	47 h7	44	45 h6	222	53	117	1	2	54	45 d9	18	10	8.5	M16x45
A 50	≥ 72	57 h7	54	55 g6	264	46	156	1	2	72	55 d9	22	10	8.5	M20x50
A 55	≥ 72	62 h7	59	60 g6	266	46	158	2.5	2	72	60 d9	22	10	8.5	M20x50
A 60	≥ 90	72 h7	69	70 g6	293	48	178	2.5	2.5	85	70 d9	22	10	8.5	M20x50
A 70	≥ 104	82 h7	79	80 g6	352.5	90	172.5	2.5	2.5	95	80 d9	22	10	8.5	M20x50
A 80	≥ 114	92 h7	89	90 g6	416	100	216	2.5	2.5	105	90 d9	26	22	20.5	M24x70
A 90	≥ 126	102 h7	99	100 g6	469	78	321	2.5	2.5	120	100 d9	26	22	20.5	M24x70

UV

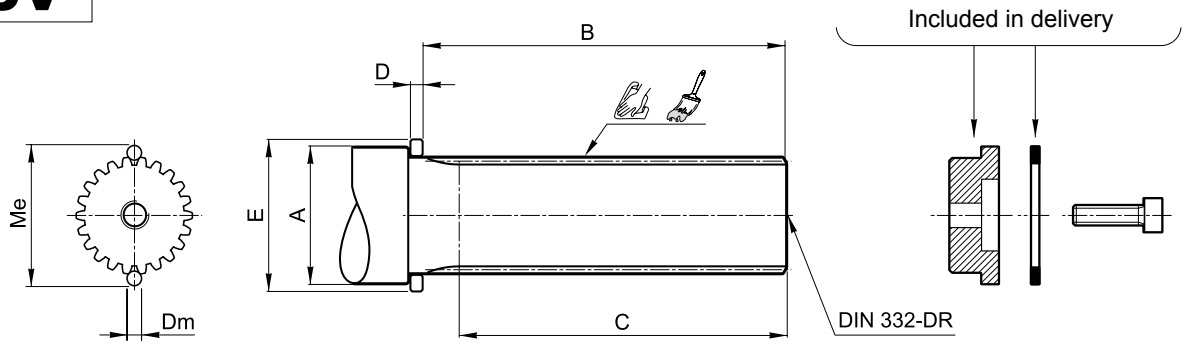

	DIN 5480	Me	Dm	A	B	C	D	E	ISO 4762
A 20	30x1.25x22	33.04 +0/-0.04	2.75	≥ 40	111.5	≥ 95	7	45	M10x35
A 30	35x2x16	38.93 +0/-0.04	4	≥ 45	130.5	≥ 112	7	50	M12x40
A 35	35x2x16	38.93 +0/-0.04	4	≥ 45	147.5	≥ 129	7	50	M12x40
A 41	45x2x21	48.86 +0/-0.04	4	≥ 55	155.5	≥ 136	7	60	M16x45
A 50	50x2x24	54.14 +0/-0.05	4	≥ 60	196	≥ 175	7	65	M16x45
A 55	50x2x24	54.14 +0/-0.05	4	≥ 60	196	≥ 175	7	65	M16x45
A 60	65x2x31	68.97 +0 /-0.05	4	≥ 75	213.5	≥ 191	7	80	M20x55

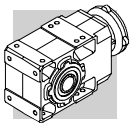

QF

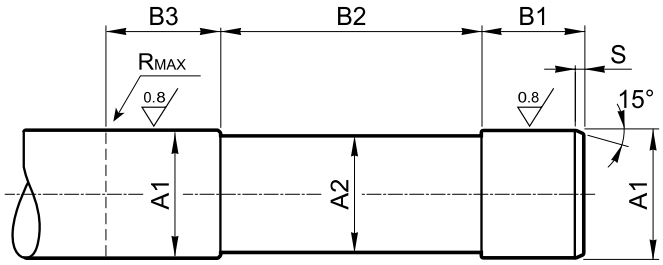

		A1	A2	B1	B2	B3	S
A 10	**QF25**	25 h6	24	41	95	≥ 50	1.5
	QF30	30 h6	29				
A 20	**QF25**	25 h6	24	41	115	≥ 50	1.5
	QF30	30 h6	29				
A 30	**QF35**	35 h6	34	45	130	≥ 54	1.5
	QF40	40 h6	39				
A 35	**QF35**	35 h6	34	45	146.5	≥ 54	1.5
	QF40	40 h6	39				
A 41	**QF40**	40 h6	39	47	151.5	≥ 56	2
	QF45	45 h6	44				
A 50	**QF50**	50 h6	49	48	197	≥ 57	2
	QF55	55 h6	54				
A 55	**QF55**	55 h6	54	50	190	≥ 59	2
	QF60	60 h6	59				
A 60	**QF60**	60 h6	59	57	203	≥ 66	2.5
	QF65	65 h6	64				
	QF70	70 h6	69				

47 INTRODUCTION TO THE ATEX DIRECTIVES

47,1 Explosive atmosphere

An **explosive atmosphere** for the purposes of Directive 2014/34/EU is defined as a mixture:

a. of **flammable substances**, in the form of gases, vapours, mists or dusts;
b. with **air**;
c. under atmospheric conditions;
d. in which, after ignition, the combustion spreads to the entire unburned mixture (it has to be noted that sometimes, mainly with dust, not always the whole quantity of the combustible material is consumed by the combustion).

An atmosphere, which could become explosive due to local and/or operational conditions is called a **potentially explosive atmosphere**.
It is only in this kind of potentially explosive atmosphere which products falling under the Directive 2014/34/EU are designed for.

47,2 European harmonised atex standards

Directive 2014/34/EU stipulates the minimum safety requirements for products intended for use in explosion risk areas within the member countries of the European Union. The directive also assigns such equipment to **categories,** which are defined by the directive itself.

The following table describes the **zones** into which the user of a plant, in which an explosive atmosphere may occur,is required to divide the equipment application areas.

(C 1)

Zones		Formation frequency of a potentially xplosive atmosphere	Type of danger
Gaseous atmosphere G	Dusty atmosphere D		
0	20	Present continuously or for long periods	Permanent
1	21	Likely to occur in normal operation occasionally	Potential
2	22	Not likely to occur in normal operation but if it does occur will persist for short period only	Minimal

BONFIGLIOLI RIDUTTORI gear units selected from this catalog are marked for installation in zones 1, 21, highlighted in light gray in the above diagram and are also suitable for installation in areas with a lower level of protection (zones 2 and 22).

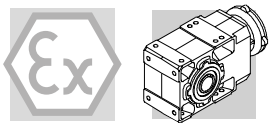

As from 20 April 2016 the ATEX directive 2014/34/EU come into force throughout the entire European Union, and replace existing conflicting national and European laws on explosive atmospheres and the previous directive 94/9/EC.
It should be emphasised that, for the first time, the directives also govern mechanical, hydraulic and pneumatic equipment, and not only electrical equipment as has been the case so far.
With regard to the Machinery Directive 2006/42/EC it should be noted that directive 2014/34/EU is a set of extremely specific requirements dedicated to the dangers deriving from potentially explosive atmospheres, whereas the Machinery Directive contains only very general explosion safety requirements (Annex I).
Consequently, as regards protection against explosion in potentially explosive atmospheres, Directive 2014/34/EU takes precedence over the Machinery Directive.
The requirements of the Machinery Directive apply to all other risks regarding machinery.

47,3 Levels of protection for the various categories of equipment

The various categories of equipment must be able to operate in conformity witht he Manufacturer's operational specifications, at certain defined levels of protection.
The availability of BONFIGLIOLI RIDUTTORI products is highlighted in grey.

(C 2)

Protection level	Category		Type of protection	Operating conditions
	Group I	Group II		
Very high	M1		Two independent means of protection or safety capable of operating even when two independent faults occur.	The equipment remains powered and operational even in the presence of an explosive atmosphere.
Very high		**1**	Two independent means of protection or safety capable of operating even when two independent faults occur.	The equipment remains powered and operational in zones 0, 1, 2 (G) and/or zones 20, 21, 22 (D).
High	M2		Protection suitable for normal operation and heavy duty conditions.	Power to the equipment is shut off in the presence of a potentially explosive atmosphere.
High		**2**	Protection suitable for normal operation and frequent faults or equipment in which malfunction is normal.	The equipment remains powered and operational in zones 1, 2 (G) and/or zones 21, 22 (D).
Normal		**3**	Protection suitable for normal operation.	The equipment remains powered and operational in zones 2 (G) and/or zones 22 (D).

47,4 Definition of groups

Group I Applies to equipment intended for use underground in parts of mines and those parts of surface installations of such mines, liable to been dangered by fire damp and/or combustible dust.

Group II Applies to equipment intended for use in other places liable to been dangered by explosive atmospheres.

BONFIGLIOLI RIDUTTORI products may not therefore be installed in mines, classified in **Group I** and in **Group II**, category 1.

To summarise, the classification of equipment in to groups, categories and zones is illustrated in the table below, where by the availability of BONFIGLIOLI RIDUTTORI products is highlighted in grey.

(C 3)

Group	**I** **Mines, firedamp**		**II** **Other potentially explosive areas (gas, dust)**					
Category	M1	M2	1		2		3	
Atmosphere(1)			G	D	G	D	G	D
Zone			0	20	1	21	2	22
Type of protection gear unit					Ex h Gb	Ex h Db	Ex h Gc	Ex h Dc

(1) **G** = gas **D = dust**

The products described here in conform to the minimum safety requirements of European Directive 2014/34/EU, which is part of the directives known as ATEX (ATmosphères EXplosibles).

47,5 Declaration of conformity

The Declaration of Conformity, is the document which attests to the conformity of the product to Directive 2014/34/EU.
The validity of the Declaration is bound to observance of the instructions given in the User, Installation and Service Manual for safe use of the product throughout its service life.
This can be downloaded from www.bonfiglioli.com where the manual is available in PDF format in a number of languages.
The instructions regarding ambient conditions are of particular importance inasmuch as failure to observe them during operation of the product renders the certificate null and void. In case of doubt regarding the validity of the certificate of conformity, contact the BONFIGLIOLI RIDUTTORI technical department.

48 SELECTION

In order to perform a correct selection of a gearbox or gear unit with IEC motor interface in ATEX version, it is mandatory to check the gearbox with mechanical verification (adopting specific service factor named f ATEX) and a thermal verification.

48,1 Mechanical Verification

Starting from the nominal output torque M_{n2} valid for input speed n_1 = 1400 min^{-1}, apply the following service factor:

For HS configuration, refer to the nominal output torque M_{n2} valid for input speed n_1 = 1400 min^{-1} and apply **f ATEX = 1.25**, except the configuration listed in the following table where **f ATEX = 1.4**

SIZE	N° of stage	Gear ratio
A 10	2	10.6 ≤ i ≤ 32.2
A 30	2	10.5 ≤ i ≤ 66
A 35	2	13.1 ≤ i ≤ 82.5
A 41	2	13.8 ≤ i ≤ 79.2

As consequence, $\mathbf{M_2\ ATEX = M_{n2} / f\ ATEX}$

For IEC configuration, select only gearmotor that has got service factor ≥ 1.4

In case of input speed higher than 1400 min^{-1}, please refer to Bonfiglioli Technical Service

Permissible radial load on input shaft: $\mathbf{R_1\ ATEX = R_{n1} / 1.5}$

Permissible radial load on output shaft: $\mathbf{R_2\ ATEX = R_{n2}}$

48,2 Thermal Verification (valid also for standard selection)

Total thermal power $\mathbf{P_t}$ can be calculated using the following formula:

$$P_t = P_{tB} \times f_{Ta} \times f_{ratio} \times f_{POS} \times f_{INT} \times f_{AIR}$$

Base thermal capacities values $\mathbf{P_{tB}}$, are listed in the flowing table and valid in the following operating conditions:

- Mounting position B3
- Input speed 1400 min^{-1} and 2800 min^{-1}
- Ambient temperature 20°C
- Confined space (air velocity ≤ 1.4 m/s)
- Altitude ≤ 1000 m.

P_{tB} [kW] @ T_a 20 °C		
	n_1 = 1400 min^{-1}	n_1 = 2800 min^{-1}
A 05	2.0	1.5
A 10	2.1	1.5
A 20	6.0	5.4
A 30	8.0	6.6
A 35	9.5	8.2

A 41	11.5	9.6
A 50	20	18
A 55	21	18
A 60	27	23
A 70	31	24
A 80	44	33
A 90	64	48

f_{Ta} = factor for ambient temperature

T_{amb}	f_{Ta}
20	1.0
30	0.88
40	0.76

f_{ratio} = factor for gear ratio

SIZE	f_{ratio}	
A05 - A60	0.8 se i ≤ 17	1 se i > 17
A70 - A90	0.8 se i ≤ 13	1 se i > 13

f_{POS} = factor for mounting position

Mounting Position	f_{POS}
B3	1.00
B8	1.00
B6	0.9
B7	0.9
VA	0.8
VB	0.8

f_{INT} = factor for intermittent duty

Degree of duty %	f_{INT}
100	1.00
80	1.05
70	1.15
40	1.35
20	1.80

f_{AIR} = factor for ambient type

Ambient air velocity [m/s]	f_{AIR}
Air velocity ≤ 0.5 m/s, small indoor space	0.75
Air velocity ≤ 1.4 m/s, large indoor space	1.00

Please refer to Bonfiglioli Technical Service for specific configuration or application data different from the standard.

The condition to be verified is: **Pr1 ≤ Pt**

49 INSTALLATION, USE AND MAINTENANCE

All the instructions for installation, use and maintenance of the product are given in the unit's Manual. This can be downloaded from www.bonfiglioli.com where the manual is available in PDF format in a number of languages.
This document must be kept in a suitable place, in the vicinity of the installed gear unit, as a reference for all persons authorised to work with or on the product throughout its service life.

50 CONSTRUCTION OF ATEX-SPECIFIED EQUIPMENT

- Equipped with service plugs for periodic lubricant level checks.
- Equipped with vent caps with anti-intrusion valve.
- Factory-charged with lubricant (synthetic oil), depending on the mounting position specified in the order.
- Fluoro elastomer seal rings as standard.
- No plastic component parts..
- Nameplate indication of the product category and type of protection.
- Components operable at above the operating temperature.
- Temperature indicator supplied along with each unit.

(C 4)

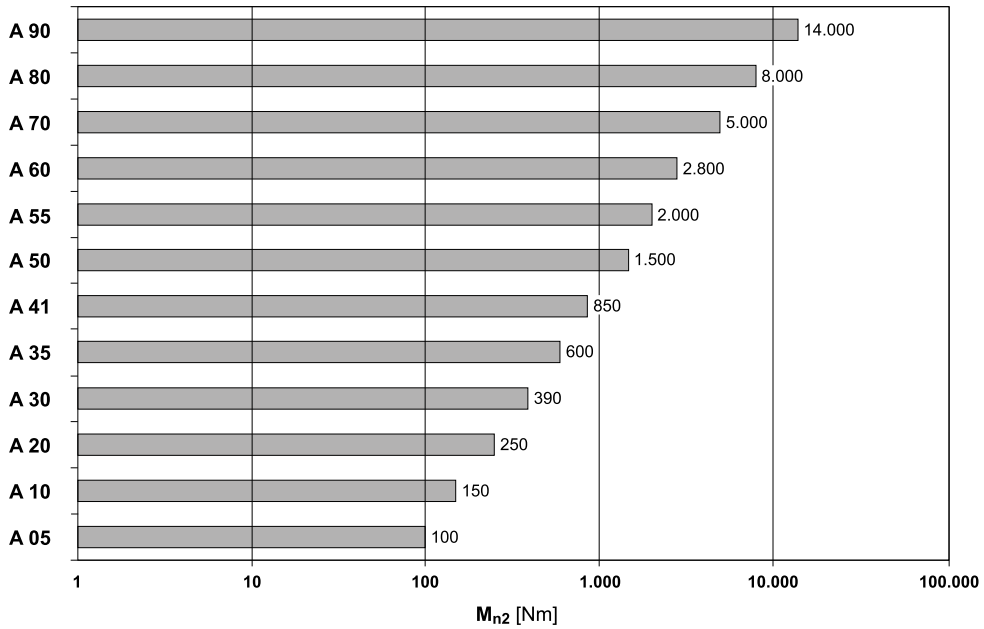

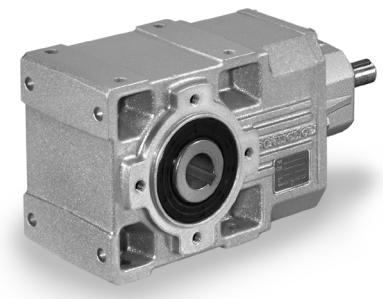

51 VERSIONS

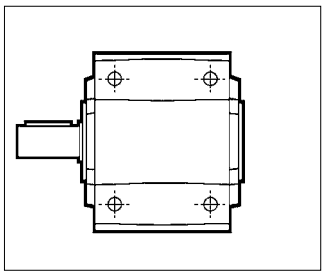

UR

Single extension output shaft

A 10 ... A 90

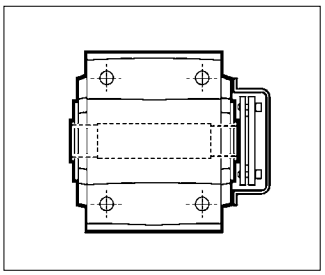

US

Hollow output shaft and shrink disc

A 05 ... A 90

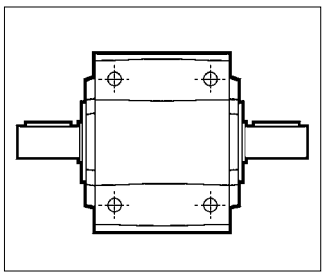

UD

Double extended output shaft

A 10 ... A 90

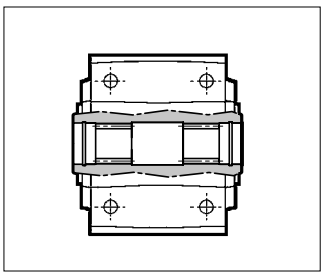

UV

Splined hollow shaft DIN 5480

A 20 ... A 60

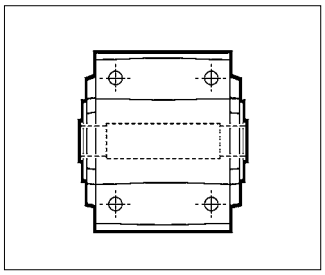

UH

Hollow output shaft and keyway

A 05 ... A 90

Basic versions with bolted flange

The sketches show the applicable flanges to the basic versions and their positions, designated with either ① or ② .

UR F1... **UR F2...**

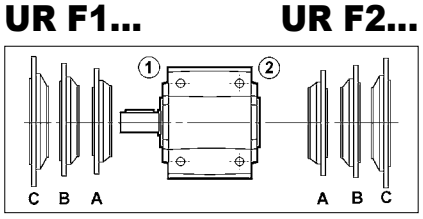

UD F1... **UD F2...**

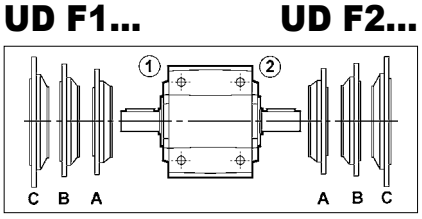

UH... F1... **UH... F2...**

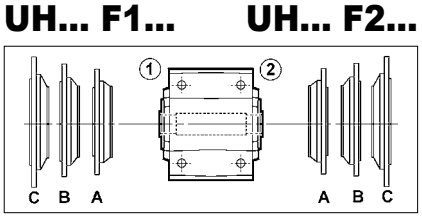

US F1... **US F2...**

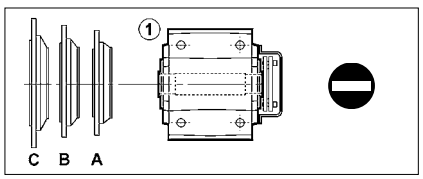

UV F1... **UV F2...**

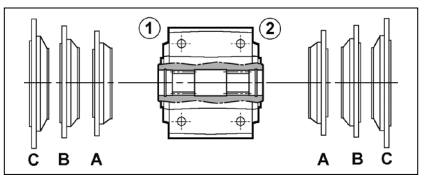

52 DESIGNATION

GEAR UNIT

A 50 3 UH50 F1A 99.5 P90 B3 EX

OPTIONS

MOUNTING POSITION
B3 (Standard), **B6**, **B7**, **B8**, **VA**, **VB**

INPUT CONFIGURATION

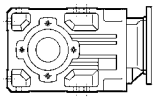
IEC_ **P63 ... P250**
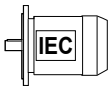

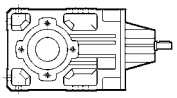
HS

GEAR RATIO

OUTPUT FLANGE SIZE AND POSITION
(specify only if requested)
F = Flanged version
1, **2** = Flange position
A, **B**, **C** = Flange size

VERSION

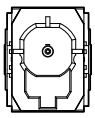
UH_

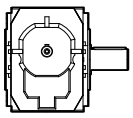
UR
(A 10...A 90)

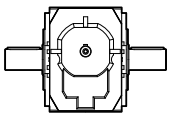
UD
(A 10...A 90)

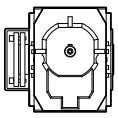
US
(A 05...A 90)

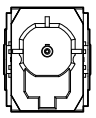
UV
(A 20...A 60)

A 05	A 10	A 20	A 30	A 35	A 41	A 50	A 55	A 60	A 70	A 80	A 90
UH25	**UH25**	**UH30**	**UH35**	**UH40**	**UH45**	**UH50**	**UH60**	**UH60**	**UH70**	**UH80**	**UH90**
—	UH30	UH35	UH40	UH35	UH40	UH55	UH50	UH70	UH80	UH90	UH100

REDUCTIONS
2 (A 05...A 60), **3** (A 20...A 90), **4** (A 50...A 90)

GEAR FRAME SIZE
05, **10**, **20**, **30**, **35**, **41**, **50**, **55**, **60**, **70**, **80**, **90**

TYPE: **A** = Helical bevel gear units

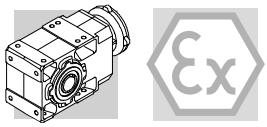

Gearbox options

EX

The gear unit can be installed in zones 1 and 21 (categories 2G and 2D).
The temperature class is T4 (max. 135 °C).

CERTIFICATES

AC - Certificate of compliance

The document certifies the compliance of the product with the purchase order and the construction in conformity with the applicable procedures of the Bonfiglioli Quality System.

CC - Inspection certificate

The document entails checking on order compliance, the visual inspection of external conditions and of mating dimensions. Checking on main functional parameters in unloaded conditions is also performed along with oil seal proofing, both in static and in running conditions. Units inspected are sampled within the shipping batch and marked individually.

53 OTHERS INFORMATION ABOUT GEARBOX AND GEARMOTOR

Mounting positions, technical data, motor availability,moments of inertia and dimensions of **A-EX (Atex)** series don’t change among equivalent **A** product series. All of these information can be obtained in the related chapters of this catalogue.

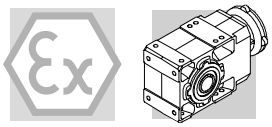

54 DESIGN FEATURES

The main design characteristics are:
- modularity
- space effectiveness
- universal mounting
- high efficiency
- quite operation
- gears in hardened and case-hardened steel
- bare aluminium housing for sizes 10, 20 and 25, high strength painted cast-iron housings for larger frame sizes.

(D 44)

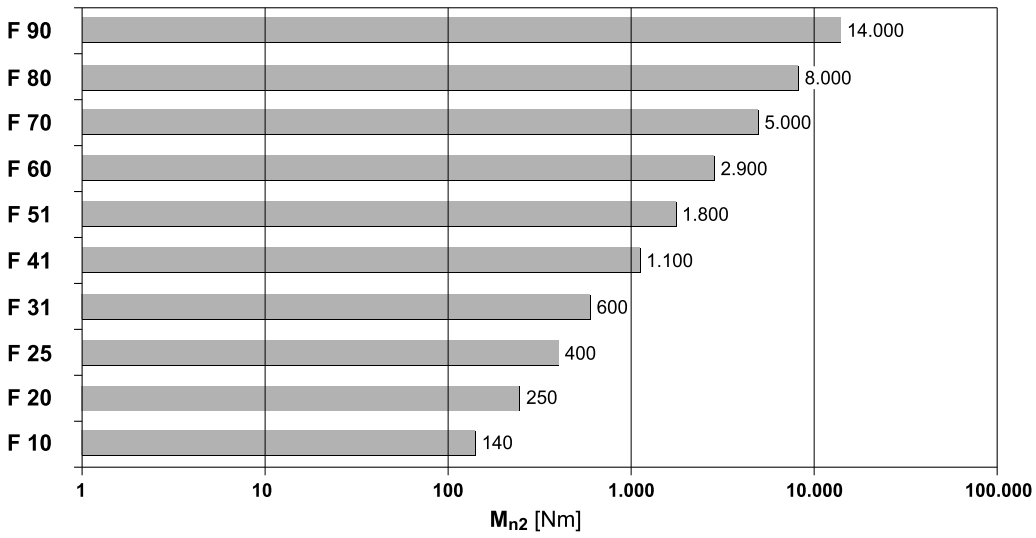

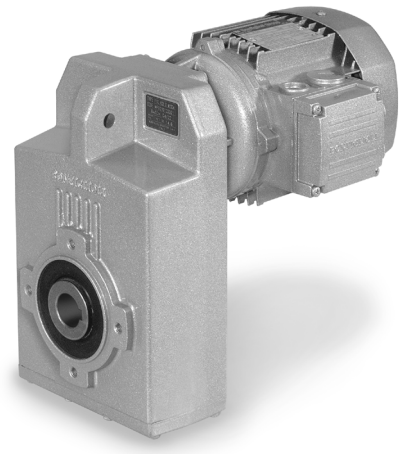

55 VERSIONS

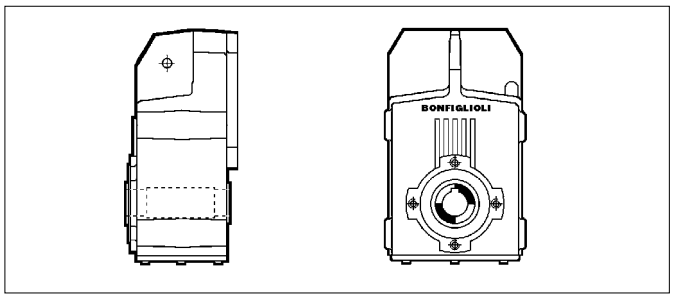

H

Hollow output shaft and keyway

F 10 ... F 90

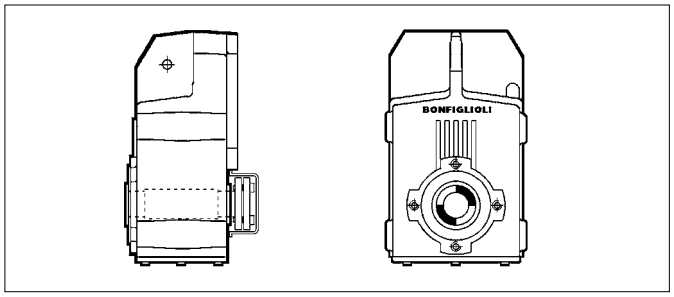

S

Hollow output shaft and shrink disc

F 10 ... F 90

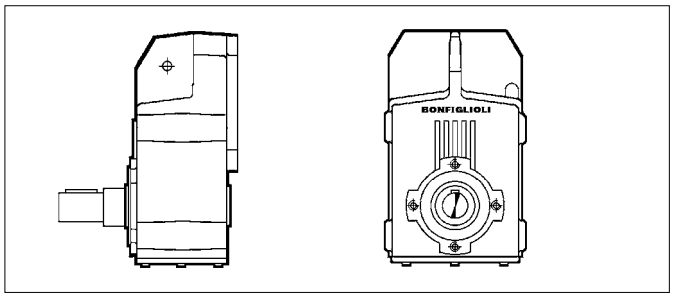

R

Solid output shaft

F 10 ... F 90

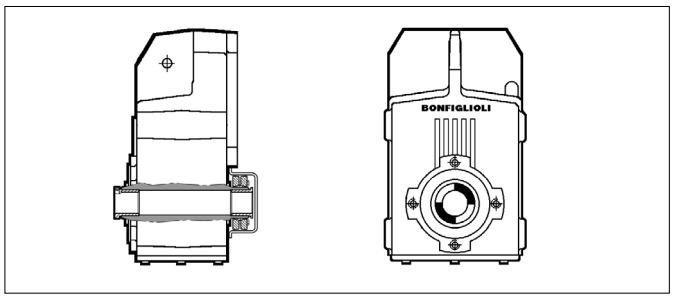

QF (Quick-fit)

Hollow shaft with adapter bushings and shrink disc

F 10 ... F 60

$M_{n2\ max}$ [Nm]	
F 25 QF30	350
F 41 QF42	850
F 41 QF45	1000
F 51 QF50	1750

Basic versions with bolted flange

The sketches show the applicable flanges to the basic versions.

H... F...

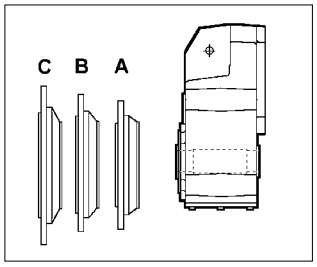

S F...

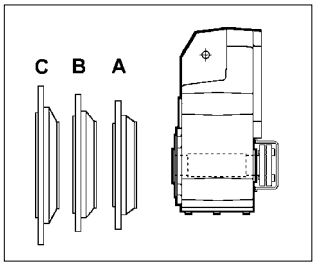

R F...

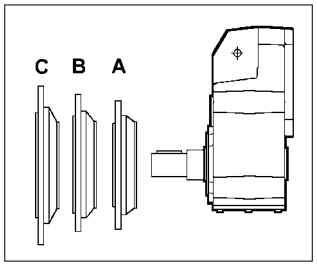

QF...

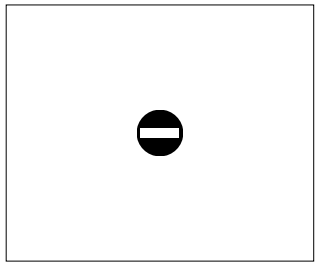

56 DESIGNATION

GEAR UNIT

F 10 2 H30 FA 9.8 S2 H5 .....

OPTIONS

MOUNTING POSITION
H1 (Default), **H2**, **H3**, **H4**, **H5**, **H6**

INPUT CONFIGURATION

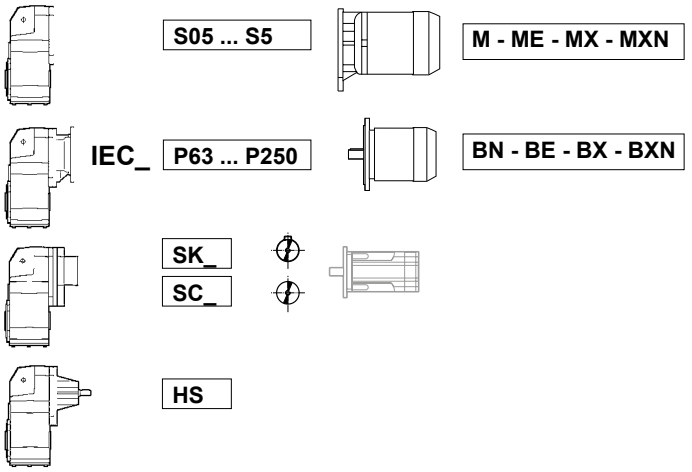

GEAR RATIO

OUTPUT FLANGE SIZE AND POSITION (specify only if requested)
F = Flanged version
A, **B**, **C** = Flange size

VERSION

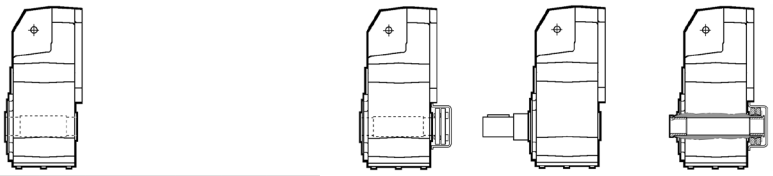

H										
	F 10	F 20	F 25	F 31	F 41	F 51	F 60	F 70	F 80	F 90
Standard	**H25**	**H30**	**H35**	**H35**	**H40**	**H50**	**H60**	**H80**	**H90**	**H100**
Alternative	H30	H35	H40	H40	H45	H55	H70	H70	H80	H90

S (F 10...F 90)

R (F 10...F 90)

QF (F 10...F 60)

← Alternative diameters available on request

REDUCTIONS
2 (F 10...F 51), **3** (F 20...F 90), **4** (F 31...F 90)

GEAR FRAME SIZE
10, **20**, **25**, **31**, **41**, **51**, **60**, **70**, **80**, **90**

TYPE **F** = helical shaft-mounted gear unit

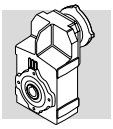

MOTOR BRAKE

M 1LA 4 230/400-50 IP54 CLF ..... **W FD** 7.5 R SB 220 SA .....

OPTIONS

BRAKE SUPPLY

RECTIFIER TYPE
AC/DC
NB, SB, NBR, SBR, NR, SR

BRAKE HAND RELEASE
R, **RM**

BRAKE TORQUE

BRAKE TYPE
FD (d.c. brake)
FDD (high performance d.c. brake)

TERMINAL BOX POSITION
W (default), **N**, **E**, **S**

MOTOR MOUNTING
— (compact motor)
B5 (IEC - motor)

INSULATION CLASS
CL F standard
CL H option

DEGREE OF PROTECTION
IP54, IP55, IP56

VOLTAGE - FREQUENCY
For BXN/MXN see the “Voltage & frequency” section on EVOX catalogue

POLE NUMBER
2, **4**, **6**

MOTOR SIZE
0B ... 5LA (compact motor)
63A ... 280SBK (IEC motor)

MOTOR TYPE
MX - MXN = compact 3-phase, class IE3
BX - BXN = IEC 3-phase, class IE3
ME = compact 3-phase, class IE2
BE = IEC 3-phase, class IE2
M = compact 3-phase, class IE1
BN = IEC 3-phase, class IE1

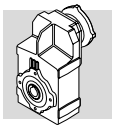

56.1 Gearbox options

LUBRICATION

Gearboxes F10, F20, 25, F31 and F41, are usually factory filled with oil in the standard version.
Gearboxes F51, F60, F70, F80 and F90, are usually supplied unlubricated in the standard version.

However, for all sizes of gearbox factory filled with oil, it is possible to request the supply with more types of oil, selectable according to what is defined in the following table.
The option is not available for gearboxes F51, F60, F70, F80 e F90 in mounting position H6.

LUBRICATION	Type	Designation	Producer
LU	PolyAlfaOlefine (PAO)	OMALA S4 GX 150	
LY	PolyAlfaOlefine (PAO)	OMALA S4 GX 220	
LV	PolyAlfaOlefine (PAO)	OMALA S4 GX 320	
LW	PolyAlfaOlefine (PAO)	OMALA S4 GX 460	
LH	PolyGlicole (PAG)	OMALA S4 WE 150	
LS	PolyGlicole (PAG)	OMALA S4 WE 220	
LO*	PolyGlicole (PAG)	OMALA S4 WE 320	
LK	PolyGlicole (PAG)	OMALA S4 WE 460	
LN [1]	Mineral Base EP	OMALA S2 G 150	
LZ [1]	Mineral Base EP	OMALA S2 G 220	
LI [1]	Mineral Base EP	OMALA S2 G 320	
LJ [1]	Mineral Base EP	OMALA S2 G 460	
LA	Food grade	KLUBERSYNTH UH1 6-150	
LB	Food grade	KLUBERSYNTH UH1 6-220	
LC	Food grade	KLUBERSYNTH UH1 6-320	
LD	Food grade	KLUBERSYNTH UH1 6-460	

* unless otherwise specified, the gearboxes F10, F20, F25, F31 and F41 supplied with lubricant use OMALA S4 WE 320 oil.

[1] The use of mineral oil is permitted on gearmotors with service factor fs ≥ 1.30

SO

Gear units F 10 through F 41 usually factory filled with oil, to be supplied unlubricated.

DV

Dual oil seals on input shaft. (Only available for integral gearmotors).

VV

Oil seal in Fluoro elastomer compound on input shaft.

PV

Both input and output shafts feature oil seal in Fluoro elastomer compound.

AL, AR

On request the gear unit can be provided complete with a backstop device allowing the output shaft to rotate only in the direction specified at the time of ordering.
Alternatively, for compact gearmotors, the backstop device is available as an option of the motor (see Motor Options).
When ordering the gear unit, the direction of free rotation must be specified through either the AR or the AL option. The following table (D46) shows the gearboxes in which the anti-run back device can be installed and supports the selection of AR or AL option, based on the desired direction of free rotation at the gearbox output shaft (clockwise or counter-clockwise).

(D 45)

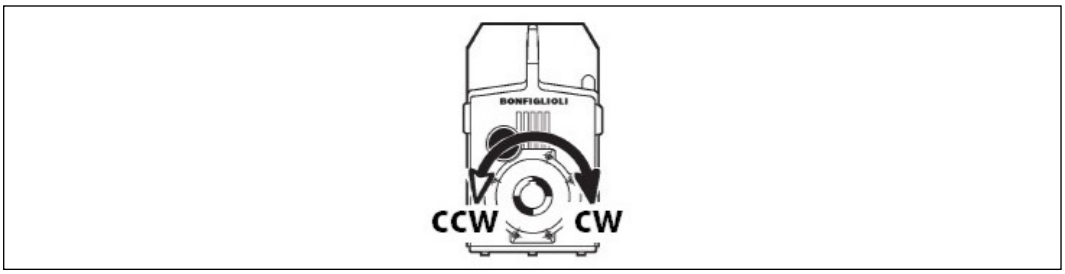

(D 46)

	Option to select based on the required direction of free rotation at gearbox output shaft The table refers to mounting position H1. (CW: clockwise, CCW: counterclockwise)					
	CW			**CCW**		
	2x	**3x**	**4x**	**2x**	**3x**	**4x**
10						
20						
25						
31	AR 1)	AR 1)		AL 1)	AL 1)	
41	AR 2)	AR		AL 2)	AL	
51		AR	AR		AL	AL
60		AR	AR		AL	AL
70		AR	AR		AL	AL
80		AR	AR		AL	AL
90		AR	AR		AL	AL

1) F 31 2 and A 31 3: backstop not compatible with servomotor adapters type S_60A, S_ 60B, S_80A
2) F 41 2: backstop not available for ratios 6.7 ... 10.8

⚠ N.B. When the anti-run back device operates very frequently make sure that the torque backdriving the gearbox does not exceed 70% of the rated torque M_{n2} for the captioned gear unit.

FL

Gear units F 10...F 41 can be side machined and tapped by specifying the FL option.
Mounting dimensions relevant to the FL option are given in the following chart. Gear units type F 51 through F 90 are side machined and tapped as standard.

(D 47)

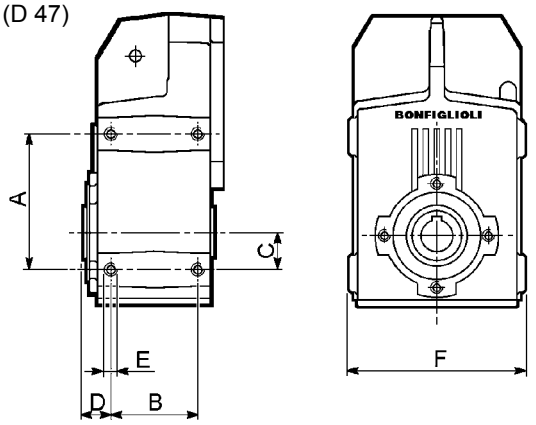

	A	B	C	D	E	F
F 10	115	60	35	21.25	M8x16	163
F 20	130	70	40	26.5	M10x20	181
F 25	130	70	40	27.5	M10x20	181
F 31	147	80	45	30	M12x20	203
F 41	190	95	60	32.5	M12x22	235

IHB

For applications where the Rated torque M_{n2} - Torque demand M_{r2} gearbox's ratio:

$$\frac{M_{n2}}{M_{r2}} \leq 1.5$$

some gearboxes can be requested with bearings with increased load ratings by specifying the **IHB** option in the order.
The **IHB** option is available for all gearboxes supplied with IEC motor adaptor: P160 - P180 - P200.
It is advisable to contact the Bonfiglioli Technical Service to verify the application.

BP

Gearboxes, usually supplied with open breather plug, are supplied with a valve breather plug. The calibration of the valve can vary from 0,10 to 0,15 bar depending on the plug type. The valve opens at intervals and allows venting of internal pressure keeping out foreign bodies.
For option availability see chapter "Mounting positions and service plugs" of the Installation, Operation and Maintenance Manual (available at: www.bonfiglioli.com).

If needed contact Bonfiglioli Technical Service.

LONG TERM STOCK

In presence of Long Term Stock option the configured product is supplied without the standard lubricant oil but with an anticorrosive protective liquid to grant the integrity and full functionality of the gear unit in those cases where the unit will not be installed immediately but it has to be stocked for a long period of time (installation later than 6 months from delivery).
The warranty conditions are valid 12 months from commissioning (with commissioning within 24 months from delivery) or 24 months from delivery without commissioning.
After 2 years of stock, the unit with SL option needs to be checked by Bonfiglioli assistance center. In case of a product that is not properly preserved, an offer by Bonfiglioli will be issued for a complete restore. With the recovery activity successfully concluded, the warranty conditions restart from the 12 months of commissioning (with commissioning within 24 months from restore date) or 24 months from restore date
Applicability of Long Term Stock option:

Gearbox size	Applicability of SL option
F10 ... F31	Only when oil lubrication options are not active (SO option is active)
F41 ... F90	Only when oil lubrication options are not active (LO, LH, LS, LK, LA, LB, LC, LD)

The Long Term Stock option can be requested in 2 versions:
- SLM Long Term Stock_Mineral Oil: option having anti-corrosive protective oil compatible with all mineral-based oil lubricants listed in the “Installation, operation and maintenance” Bonfiglioli manual (MUM).
- SLP Long Term Stock_Polyglycol Oil: option having anti-corrosive protective oil compatible with all polyglycol-based oil lubricants listed in the “Installation, operation and maintenance” Bonfiglioli manual (MUM).

Note: only one version can be selected. SLM and SLP can’t coexist.

When configuring a gear unit or gearmotor with Long Term Stock option, it is necessary to know the type of lubricating oil that will be used by the customer during the operating period (mineral or polyglycol oil). Before commissioning a Bonfiglioli product with Long Term Stock option, make sure that the lubricating oil filling activity takes place through the specific filling plug determined by the mounting position indicated on the plate. With regards to gear units with lifetime lubrication (see table below), the quantity of lubricating oil to top up is not indicated in the relevant “installation, use and maintenance” Bonfiglioli manual. In this case, if the Long Term Stock option is active, it is therefore necessary to contact the Bonfiglioli assistance center to receive this information.

Gearbox size	Lubricant charge quantity
F10 ... F41	BONFIGLIOLI TECHNICAL SERVICE
F51 ... F90	

SURFACE PROTECTION

When no specific protection class is requested, the painted (ferrous) surfaces of gearboxes are protected to at least corrosivity class C2 (UNI EN ISO 12944-2). For improved resistance to atmospheric corrosion, gearboxes can be delivered with **C3** and **C4** surface protection, obtained by painting the complete gearbox.

(D 48)

SURFACE PROTECTION	Typical environments	Maximum surface temperature	Corrosivity class according to UNI EN ISO 12944-2
C3	Urban and industrial environments with up to 100% relative humidity (medium air pollution)	120°C	C3
C4	Industrial areas, coastal areas, chemical plant, with up to 100% relative humidity (high air pollution)	120°C	C4

Gearboxes with optional protection to class **C3** or **C4** are available in a choice of colours.
If no specific colour is requested (see the “PAINTING” option) gearboxes are finished in RAL 7042.
Gearboxes can also be supplied with surface protection for corrosivity class **C5** according to UNI EN ISO 12944-2. Contact our Technical Service for further details.

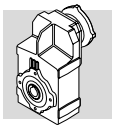

PAINTING

Gearboxes with optional protection to class C3 or C4 are available in the colours listed in the following table.

(D 49)

PAINTING	Colour	RAL number
RAL7042*	Traffik Grey A	7042
RAL5010	Gentian Blue	5010
RAL9005	Jet Black	9005
RAL9006	White Aluminium	9006
RAL9010	Pure White	9010
RAL7035	Light Grey	7035
RAL7001	Silver Grey	7001
RAL5015	Sky Blue	5015
RAL7037	Dusty Grey	7037
RAL5024	Pastel Blue	5024

* Gearboxes are supplied in this standard colour if no other colour is specified.

NOTE – “PAINTING” options can only be specified in conjunction with “SURFACE PROTECTION” options.

CERTIFICATES

AC - Certificate of compliance
The document certifies the compliance of the product with the purchase order and the construction in conformity with the applicable procedures of the Bonfiglioli Quality System.

CC - Inspection certificate
The document entails checking on order compliance, the visual inspection of external conditions and of mating dimensions. Checking on main functional parameters in unloaded conditions is also performed along with oil seal proofing, both in static and in running conditions. Units inspected are sampled within the shipping batch and marked individually.

56.2 Accessories

See chapter 66 of this catalogue.

56.3 Motor options

AL, AR

The backstop option is available for gearmotors with M, ME and MX motors and it is not compatible with the corresponding gearbox option.

When ordering the gear unit, the direction of free rotation must be specified through either the AR or the AL option. The following table (D50) supports the selection of AR or AL option, based on the desired direction of free rotation at the gearbox output shaft (clockwise or counter-clockwise).

(D 50)



Option to select based on the required direction of free rotation at gearbox output shaft
Valid for all Sizes. The table refers to the gearbox in mounting position H1.
(CW: clockwise, CCW: counterclockwise)

CW			CCW		
2x	3x	4x	2x	3x	4x
AR	AL	AR	AL	AR	AL

For further information on this option, consult the electric motors section.

57 MOUNTING POSITION AND TERMINAL BOX ANGULAR LOCATION

Location of motor terminal box can be specified by viewing the motor from the fan side; standard location is shown in black (W).

Angular location of the brake release lever.

Unless otherwise specified, brake motors have the manual device side located, 90° apart from terminal box. Different angles can be specified through the relevant options available.

(D 51)

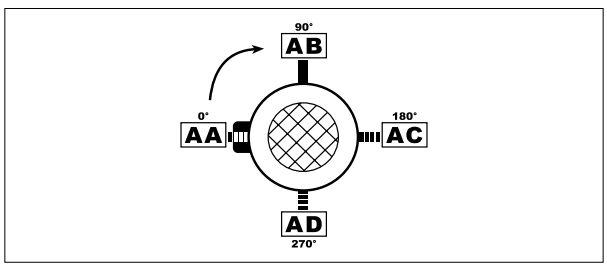

F ...

H1

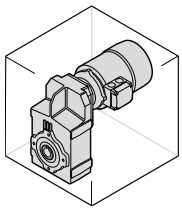
_S

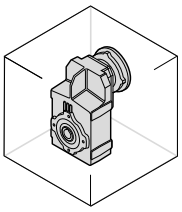
_P(IEC) _SK / _SC

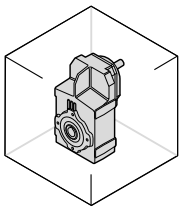
_HS

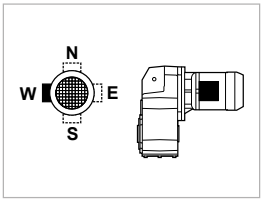

H2

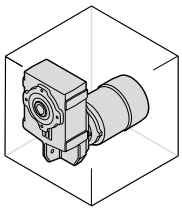
_S

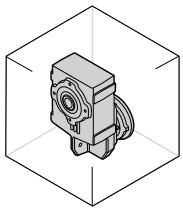
_P(IEC) _SK / _SC

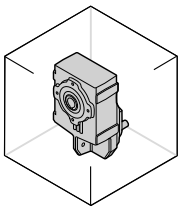
_HS

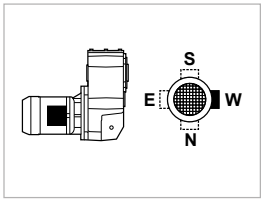

H3

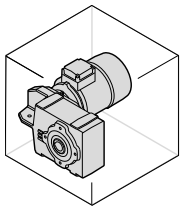
_S

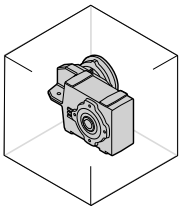
_P(IEC) _SK / _SC

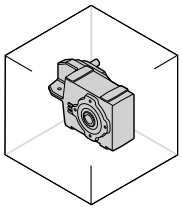
_HS

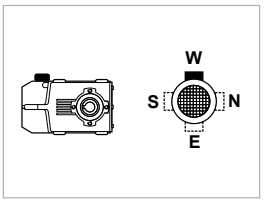

H4

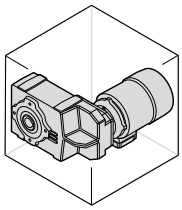
_S

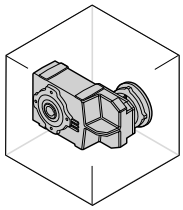
_P(IEC) _SK / _SC

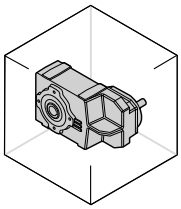
_HS

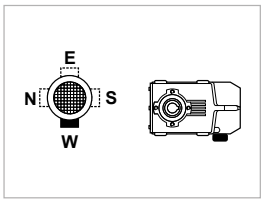

H5

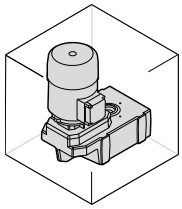
_S

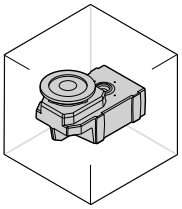
_P(IEC) _SK / _SC

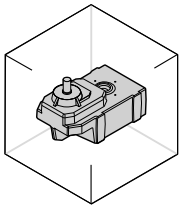
_HS

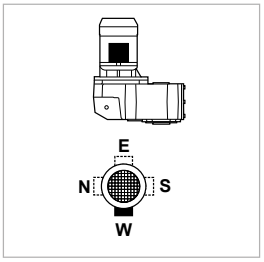

H6

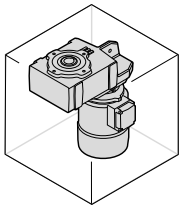
_S

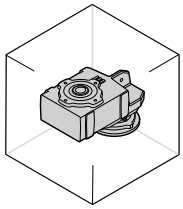
_P(IEC) _SK / _SC

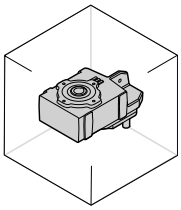
_HS

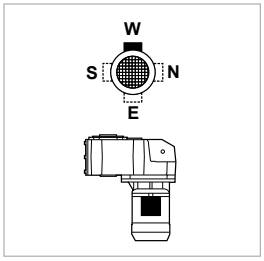

W = Default

58 OVERHUNG LOADS

External transmissions keyed onto input and/or output shaft generate loads that act radially onto same shaft.
Resulting shaft loading must be compatible with both the bearing and the shaft capacity. Namely shaft loading (R_{c1} for input shaft, R_{c2} for output shaft), must be equal or lower than admissible overhung load capacity for shaft under study (R_{n1} for input shaft, R_{n2} for output shaft). OHL capability listed in the rating chart section.
In the formulas given below, index (1) applies to parameters relating to input shaft, whereas index (2) refers to output shaft.
The load generated by an external transmission can be calculated with close approximation by the following equations:

$$R_{c1}\,[N] = \frac{2000 \cdot M_1[Nm] \cdot K_r}{d\,[mm]} \quad ; \quad R_{c2}\,[N] = \frac{2000 \cdot M_2[Nm] \cdot K_r}{d\,[mm]} \qquad (35)$$

(D 52)

M_1 [Nm]	Torque applied to input shaft
M_2 [Nm]	Torque drawn at output shaft
d [mm]	Pitch diameter of element keyed onto shaft
K_r = 1	Chain transmission

K_r = 1,25	Gear transmission
K_r = 1,5	V-belt transmission
K_r = 2,0	Flat belt transmission

Verification of OHL capability varies depending on whether load applies at midpoint of shaft or it is shifted further out:

(D 53)

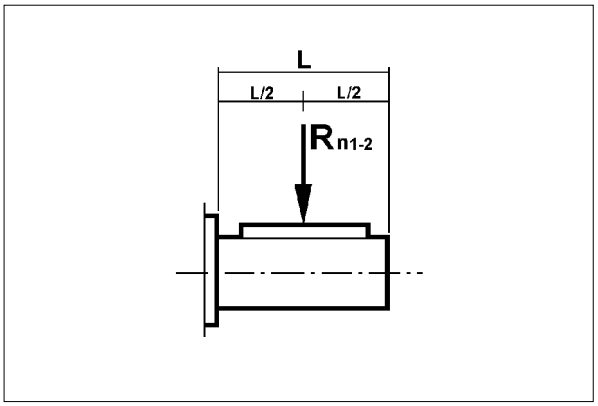

(D 54)

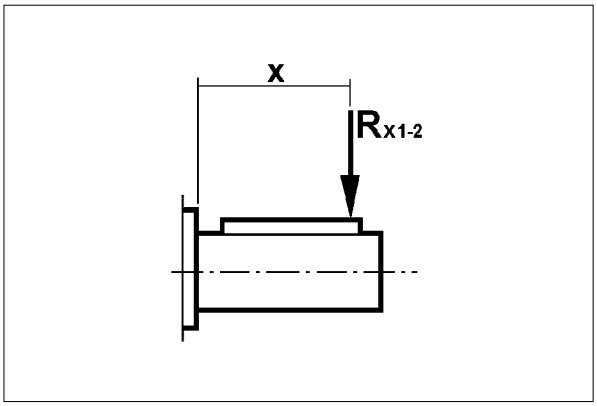

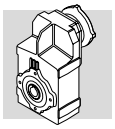

a) Load applied at midpoint of shaft, tab. (D53)

A comparison of shaft loading with catalogue OHL ratings should verify the following condition:

$Rc1 \leq Rn1$ [input shaft]

or

$Rc2 \leq Rn2$ [output shaft]

b) Load off the midpoint tab. (D54)

When load is shifted at an “x” distance from shaft shoulder, permissible load must be calculated for that distance.
Revised permissible overhung loads Rx1 (input) and Rx2 (output) are calculated respectively from original rated values Rn1 and Rn2 through factor:

$$\frac{a}{b+x} \qquad (36)$$

(D 55)

	Load location factors					
	Output shaft			Input shaft		
	a	**b**	**c**	**a**	**b**	**c**
F 10 2	123	100.5	450	21	1	300
F 20 2	145	115	600	40	20	350
F 20 3	145	115	600	21	1	300
F 25 2 - F 25 3	157.5	127.5	800	40	20	350
F 25 4	157.5	127.5	800	21	1	300
F 31 2 - F 31 3	165	135	850	38.5	18.5	350
F 31 4	165	135	850	21	1	300
F 41 2 - F 41 3	191.5	151.5	1000	49.5	24.5	450
F 41 4	191.5	151.5	1000	40	20	350
F 51 2 - F 51 3	233.5	183.5	1300	49.5	24.5	450
F 51 4	233.5	183.5	1300	38.5	18.5	350
F 60 3	258.5	198.5	1100	55.5	25.5	600
F 60 4	258.5	198.5	1100	49.5	24.5	450
F 70 3	342	277	1600	86	31	1000
F 70 4	342	277	1600	49.5	24.5	450
F 80 3	386.5	301.5	1800	86	31	1000
F 80 4	386.5	301.5	1800	49.5	24.5	450
F 90 3	458.5	353.5	2400	116	46	1400
F 90 4	458.5	353.5	2400	49.5	24.5	450

Verification procedure is described here after.

INPUT SHAFT

1. Calculate:

$$R_{x1} = R_{n1} \cdot \frac{a}{b + x} \quad (37)$$

N.B. Subject to condition:

$$\frac{L}{2} \leq x \leq c \quad (38)$$

Finally, the following condition must be verified:

$$R_{c1} \leq R_{x1} \quad (39)$$

OUTPUT SHAFT

1. Calculate:

$$R_{x2} = R_{n2} \cdot \frac{a}{b + x} \quad (40)$$

N.B. Subject to condition:

$$\frac{L}{2} \leq x \leq c \quad (41)$$

Finally, the following condition must be verified:

$$R_{c2} \leq R_{x2} \quad (42)$$

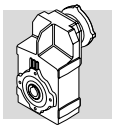

59 THRUST LOADS, A_{n1}, A_{n2}

Permissible thrust loads on input [A_{n1}] and output [A_{n2}] shafts are obtained from the radial loading for the shaft under consideration [R_{n1}] and [R_{n2}] through the following equation:

$$A_{n1} = R_{n1} \cdot 0.2$$
$$A_{n2} = R_{n2} \cdot 0.2 \qquad (43)$$

The thrust loads calculated through these formulas apply to thrust forces occurring at the same time as rated radial loads.
In the only case that no overhung load acts on the shaft the value of the admissible thrust load [A_n] amounts to 50% of rated OHL [R_n] on same shaft.
Where thrust loads exceed permissible value or largely prevail over radial loads, contact Bonfiglioli Riduttori for an in-depth analysis of the application.

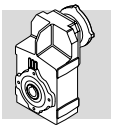

60 GEARMOTOR RATING CHARTS

0.12 kW

n_2	M_2	S	i	R_{n2}	IE2	IE3		IE2 (IEC)	IE3 (IEC)	
min^{-1}	Nm			N						
0.6	1742	2.9	2188	35000				**F704_2188 P63 BE63A4**	**F704_2188 P63 BX63A4**	523
0.7	1607	3.1	2019	35000				**F704_2019 P63 BE63A4**	**F704_2019 P63 BX63A4**	523
1.0	1090	1.0	1411	8500	**F414_1411 S05 ME05A4**	**F414_1411 S05 MX05A4**	510	**F414_1411 P63 BE63A4**	**F414_1411 P63 BX63A4**	511
1.1	938	1.2	1213	8500	**F414_1213 S05 ME05A4**	**F414_1213 S05 MX05A4**	510	**F414_1213 P63 BE63A4**	**F414_1213 P63 BX63A4**	511
1.2	844	1.3	1092	8500	**F414_1092 S05 ME05A4**	**F414_1092 S05 MX05A4**	510	**F414_1092 P63 BE63A4**	**F414_1092 P63 BX63A4**	511
1.4	759	1.4	982.4	8500	**F414_982.4 S05 ME05A4**	**F414_982.4 S05 MX05A4**	510	**F414_982.4 P63 BE63A4**	**F414_982.4 P63 BX63A4**	511
1.5	696	1.6	900.5	8500	**F414_900.5 S05 ME05A4**	**F414_900.5 S05 MX05A4**	510	**F414_900.5 P63 BE63A4**	**F414_900.5 P63 BX63A4**	511
1.6	643	0.9	831.6	6500	**F314_831.6 S05 ME05A4**	**F314_831.6 S05 MX05A4**	506	**F314_831.6 P63 BE63A4**	**F314_831.6 P63 BX63A4**	507
1.7	629	1.7	813.8	8500	**F414_813.8 S05 ME05A4**	**F414_813.8 S05 MX05A4**	510	**F414_813.8 P63 BE63A4**	**F414_813.8 P63 BX63A4**	511
1.8	589	1.0	762.3	6500	**F314_762.3 S05 ME05A4**	**F314_762.3 S05 MX05A4**	506	**F314_762.3 P63 BE63A4**	**F314_762.3 P63 BX63A4**	507
1.8	571	1.9	739.4	8500	**F414_739.4 S05 ME05A4**	**F414_739.4 S05 MX05A4**	510	**F414_739.4 P63 BE63A4**	**F414_739.4 P63 BX63A4**	511
2.0	530	1.1	685.6	6500	**F314_685.6 S05 ME05A4**	**F314_685.6 S05 MX05A4**	506	**F314_685.6 P63 BE63A4**	**F314_685.6 P63 BX63A4**	507
2.0	533	2.1	690.1	8500	**F414_690.1 S05 ME05A4**	**F414_690.1 S05 MX05A4**	510	**F414_690.1 P63 BE63A4**	**F414_690.1 P63 BX63A4**	511
2.2	479	1.3	619.9	6500	**F314_619.9 S05 ME05A4**	**F314_619.9 S05 MX05A4**	506	**F314_619.9 P63 BE63A4**	**F314_619.9 P63 BX63A4**	507
2.3	456	0.9	589.7	6500	**F254_589.7 S05 ME05A4**	**F254_589.7 S05 MX05A4**	502	**F254_589.7 P63 BE63A4**	**F254_589.7 P63 BX63A4**	503
2.3	447	1.3	578.6	6500	**F314_578.6 S05 ME05A4**	**F314_578.6 S05 MX05A4**	506	**F314_578.6 P63 BE63A4**	**F314_578.6 P63 BX63A4**	507
2.5	425	2.6	549.8	8500	**F414_549.8 S05 ME05A4**	**F414_549.8 S05 MX05A4**	510	**F414_549.8 P63 BE63A4**	**F414_549.8 P63 BX63A4**	511
2.6	408	1.0	527.3	6500	**F254_527.3 S05 ME05A4**	**F254_527.3 S05 MX05A4**	502	**F254_527.3 P63 BE63A4**	**F254_527.3 P63 BX63A4**	503
2.6	408	1.5	527.8	6500	**F314_527.8 S05 ME05A4**	**F314_527.8 S05 MX05A4**	506	**F314_527.8 P63 BE63A4**	**F314_527.8 P63 BX63A4**	507
2.9	360	1.1	466.0	6500	**F254_466.0 S05 ME05A4**	**F254_466.0 S05 MX05A4**	502	**F254_466.0 P63 BE63A4**	**F254_466.0 P63 BX63A4**	503
2.9	358	1.7	462.6	6500	**F314_462.6 S05 ME05A4**	**F314_462.6 S05 MX05A4**	506	**F314_462.6 P63 BE63A4**	**F314_462.6 P63 BX63A4**	507
3.1	336	1.2	434.9	6500	**F254_434.9 S05 ME05A4**	**F254_434.9 S05 MX05A4**	502	**F254_434.9 P63 BE63A4**	**F254_434.9 P63 BX63A4**	503
3.1	335	3.3	433.7	8500	**F414_433.7 S05 ME05A4**	**F414_433.7 S05 MX05A4**	510	**F414_433.7 P63 BE63A4**	**F414_433.7 P63 BX63A4**	511
3.2	324	1.9	418.9	6500	**F314_418.9 S05 ME05A4**	**F314_418.9 S05 MX05A4**	506	**F314_418.9 P63 BE63A4**	**F314_418.9 P63 BX63A4**	507
3.4	304	1.3	393.9	6500	**F254_393.9 S05 ME05A4**	**F254_393.9 S05 MX05A4**	502	**F254_393.9 P63 BE63A4**	**F254_393.9 P63 BX63A4**	503
3.6	296	2.0	374.4	6500				**F313_374.4 P63 BE63A4**	**F313_374.4 P63 BX63A4**	507
4.1	263	1.5	333.1	6500	**F253_333.1 S05 ME05A4**	**F253_333.1 S05 MX05A4**	502	**F253_333.1 P63 BE63A4**	**F253_333.1 P63 BX63A4**	503
4.1	263	2.3	332.8	6500				**F313_332.8 P63 BE63A4**	**F313_332.8 P63 BX63A4**	507
4.3	250	1.0	316.9	4000	**F203_316.9 S05 ME05A4**	**F203_316.9 S05 MX05A4**	498	**F203_316.9 P63 BE63A4**	**F203_316.9 P63 BX63A4**	499
4.6	232	2.6	293.8	6500				**F313_293.8 P63 BE63A4**	**F313_293.8 P63 BX63A4**	507
4.7	225	1.1	285.2	4000	**F203_285.2 S05 ME05A4**	**F203_285.2 S05 MX05A4**	498	**F203_285.2 P63 BE63A4**	**F203_285.2 P63 BX63A4**	499
4.7	228	1.8	288.1	6500	**F253_288.1 S05 ME05A4**	**F253_288.1 S05 MX05A4**	502	**F253_288.1 P63 BE63A4**	**F253_288.1 P63 BX63A4**	503
5.3	202	1.2	255.3	4000	**F203_255.3 S05 ME05A4**	**F203_255.3 S05 MX05A4**	498	**F203_255.3 P63 BE63A4**	**F203_255.3 P63 BX63A4**	499
5.3	202	2.0	256.1	6500	**F253_256.1 S05 ME05A4**	**F253_256.1 S05 MX05A4**	502	**F253_256.1 P63 BE63A4**	**F253_256.1 P63 BX63A4**	503
5.3	200	3.0	253.6	6500				**F313_253.6 P63 BE63A4**	**F313_253.6 P63 BX63A4**	507
5.9	180	2.2	227.8	6500	**F253_227.8 S05 ME05A4**	**F253_227.8 S05 MX05A4**	502	**F253_227.8 P63 BE63A4**	**F253_227.8 P63 BX63A4**	503
5.9	180	3.3	228.2	6500				**F313_228.2 P63 BE63A4**	**F313_228.2 P63 BX63A4**	507
6.5	165	1.5	209.3	4000	**F203_209.3 S05 ME05A4**	**F203_209.3 S05 MX05A4**	498	**F203_209.3 P63 BE63A4**	**F203_209.3 P63 BX63A4**	499
7.0	153	2.6	193.6	6500	**F253_193.6 S05 ME05A4**	**F253_193.6 S05 MX05A4**	502	**F253_193.6 P63 BE63A4**	**F253_193.6 P63 BX63A4**	503
7.3	146	1.7	184.9	4000	**F203_184.9 S05 ME05A4**	**F203_184.9 S05 MX05A4**	498	**F203_184.9 P63 BE63A4**	**F203_184.9 P63 BX63A4**	499
7.7	138	2.9	174.2	6500	**F253_174.2 S05 ME05A4**	**F253_174.2 S05 MX05A4**	502	**F253_174.2 P63 BE63A4**	**F253_174.2 P63 BX63A4**	503
7.8	136	1.8	172.6	4000	**F203_172.6 S05 ME05A4**	**F203_172.6 S05 MX05A4**	498	**F203_172.6 P63 BE63A4**	**F203_172.6 P63 BX63A4**	499
8.6	123	2.0	156.3	4000	**F203_156.3 S05 ME05A4**	**F203_156.3 S05 MX05A4**	498	**F203_156.3 P63 BE63A4**	**F203_156.3 P63 BX63A4**	499
8.7	123	3.2	155.9	6500	**F253_155.9 S05 ME05A4**	**F253_155.9 S05 MX05A4**	502	**F253_155.9 P63 BE63A4**	**F253_155.9 P63 BX63A4**	503
9.4	113	3.5	143.0	6500	**F253_143.0 S05 ME05A4**	**F253_143.0 S05 MX05A4**	502	**F253_143.0 P63 BE63A4**	**F253_143.0 P63 BX63A4**	503
10.2	107	2.3	132.2	4000	**F202_132.2 S05 ME05A4**	**F202_132.2 S05 MX05A4**	498	**F202_132.2 P63 BE63A4**	**F202_132.2 P63 BX63A4**	499
10.6	103	1.4	127.1	2800	**F102_127.1 S05 ME05A4**	**F102_127.1 S05 MX05A4**	494	**F102_127.1 P63 BE63A4**	**F102_127.1 P63 BX63A4**	495
11.8	92	2.7	114.3	4000	**F202_114.3 S05 ME05A4**	**F202_114.3 S05 MX05A4**	498	**F202_114.3 P63 BE63A4**	**F202_114.3 P63 BX63A4**	499
12.7	86	1.6	106.0	2800	**F102_106.0 S05 ME05A4**	**F102_106.0 S05 MX05A4**	494	**F102_106.0 P63 BE63A4**	**F102_106.0 P63 BX63A4**	495
13.3	82	3.0	101.6	4000	**F202_101.6 S05 ME05A4**	**F202_101.6 S05 MX05A4**	498	**F202_101.6 P63 BE63A4**	**F202_101.6 P63 BX63A4**	499
14.8	74	1.9	91.5	2800	**F102_91.5 S05 ME05A4**	**F102_91.5 S05 MX05A4**	494	**F102_91.5 P63 BE63A4**	**F102_91.5 P63 BX63A4**	495
14.9	73	3.4	90.4	4000	**F202_90.4 S05 ME05A4**	**F202_90.4 S05 MX05A4**	498	**F202_90.4 P63 BE63A4**	**F202_90.4 P63 BX63A4**	499
16.6	66	2.1	81.3	2800	**F102_81.3 S05 ME05A4**	**F102_81.3 S05 MX05A4**	494	**F102_81.3 P63 BE63A4**	**F102_81.3 P63 BX63A4**	495
19.0	57	2.4	71.1	2800	**F102_71.1 S05 ME05A4**	**F102_71.1 S05 MX05A4**	494	**F102_71.1 P63 BE63A4**	**F102_71.1 P63 BX63A4**	495

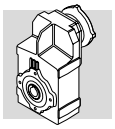

0.12 kW

n_2 min-1	M_2 Nm	S	i	R_{n2} N	IE2	IE3		IE2	IEC IE3	
21.4	51	2.8	63.0	2800	**F102_63.0 S05 ME05A4**	**F102_63.0 S05 MX05A4**	494	**F102_63.0 P63 BE63A4**	**F102_63.0 P63 BX63A4**	495
23.8	46	3.1	56.7	2800	**F102_56.7 S05 ME05A4**	**F102_56.7 S05 MX05A4**	494	**F102_56.7 P63 BE63A4**	**F102_56.7 P63 BX63A4**	495
27.7	39	3.6	48.7	2800	**F102_48.7 S05 ME05A4**	**F102_48.7 S05 MX05A4**	494	**F102_48.7 P63 BE63A4**	**F102_48.7 P63 BX63A4**	495
30.0	36	3.9	44.7	2800	**F102_44.7 S05 ME05A4**	**F102_44.7 S05 MX05A4**	494	**F102_44.7 P63 BE63A4**	**F102_44.7 P63 BX63A4**	495
34.0	32	4.4	39.6	2800	**F102_39.6 S05 ME05A4**	**F102_39.6 S05 MX05A4**	494	**F102_39.6 P63 BE63A4**	**F102_39.6 P63 BX63A4**	495
38.0	29	4.9	35.3	2800	**F102_35.3 S05 ME05A4**	**F102_35.3 S05 MX05A4**	494	**F102_35.3 P63 BE63A4**	**F102_35.3 P63 BX63A4**	495
41.0	27	5.3	33.0	2800	**F102_33.0 S05 ME05A4**	**F102_33.0 S05 MX05A4**	494	**F102_33.0 P63 BE63A4**	**F102_33.0 P63 BX63A4**	495
46.0	24	5.9	29.6	2800	**F102_29.6 S05 ME05A4**	**F102_29.6 S05 MX05A4**	494	**F102_29.6 P63 BE63A4**	**F102_29.6 P63 BX63A4**	495
52.0	21	6.7	25.8	2800	**F102_25.8 S05 ME05A4**	**F102_25.8 S05 MX05A4**	494	**F102_25.8 P63 BE63A4**	**F102_25.8 P63 BX63A4**	495
59.0	18	7.6	22.8	2700	**F102_22.8 S05 ME05A4**	**F102_22.8 S05 MX05A4**	494	**F102_22.8 P63 BE63A4**	**F102_22.8 P63 BX63A4**	495
70.0	16	8.7	19.3	2560	**F102_19.3 S05 ME05A4**	**F102_19.3 S05 MX05A4**	494	**F102_19.3 P63 BE63A4**	**F102_19.3 P63 BX63A4**	495
80.0	14	9.3	17.0	2450	**F102_17.0 S05 ME05A4**	**F102_17.0 S05 MX05A4**	494	**F102_17.0 P63 BE63A4**	**F102_17.0 P63 BX63A4**	495
92.0	12	10.1	14.6	2340	**F102_14.6 S05 ME05A4**	**F102_14.6 S05 MX05A4**	494	**F102_14.6 P63 BE63A4**	**F102_14.6 P63 BX63A4**	495
104.0	11	9.9	13.0	2250	**F102_13.0 S05 ME05A4**	**F102_13.0 S05 MX05A4**	494	**F102_13.0 P63 BE63A4**	**F102_13.0 P63 BX63A4**	495
117.0	9	10.3	11.5	2160	**F102_11.5 S05 ME05A4**	**F102_11.5 S05 MX05A4**	494	**F102_11.5 P63 BE63A4**	**F102_11.5 P63 BX63A4**	495
138.0	8	11.3	9.8	2050	**F102_9.8 S05 ME05A4**	**F102_9.8 S05 MX05A4**	494	**F102_9.8 P63 BE63A4**	**F102_9.8 P63 BX63A4**	495
157.0	7	11.8	8.6	1970	**F102_8.6 S05 ME05A4**	**F102_8.6 S05 MX05A4**	494	**F102_8.6 P63 BE63A4**	**F102_8.6 P63 BX63A4**	495
182.0	6	12.7	7.4	1870	**F102_7.4 S05 ME05A4**	**F102_7.4 S05 MX05A4**	494	**F102_7.4 P63 BE63A4**	**F102_7.4 P63 BX63A4**	495

0.12 kW

n_2 min-1	M_2 Nm	S	i	R_{n2} N	IE3		IEC IE3	
0.6	1742	2.9	2188	35000			**F704_2188 P63 BXN63MA4**	523
0.7	1607	3.1	2019	35000			**F704_2019 P63 BXN63MA4**	523
1.0	1090	1.0	1411	8500	**F414_1411 SX05 MXN05MA4**	510	**F414_1411 P63 BXN63MA4**	511
1.1	938	1.2	1213	8500	**F414_1213 SX05 MXN05MA4**	510	**F414_1213 P63 BXN63MA4**	511
1.2	844	1.3	1092	8500	**F414_1092 SX05 MXN05MA4**	510	**F414_1092 P63 BXN63MA4**	511
1.4	759	1.4	982.4	8500	**F414_982.4 SX05 MXN05MA4**	510	**F414_982.4 P63 BXN63MA4**	511
1.5	696	1.6	900.5	8500	**F414_900.5 SX05 MXN05MA4**	510	**F414_900.5 P63 BXN63MA4**	511
1.6	643	0.9	831.6	6500	**F314_831.6 SX05 MXN05MA4**	506	**F314_831.6 P63 BXN63MA4**	507
1.7	629	1.7	813.8	8500	**F414_813.8 SX05 MXN05MA4**	510	**F414_813.8 P63 BXN63MA4**	511
1.8	589	1.0	762.3	6500	**F314_762.3 SX05 MXN05MA4**	506	**F314_762.3 P63 BXN63MA4**	507
1.8	571	1.9	739.4	8500	**F414_739.4 SX05 MXN05MA4**	510	**F414_739.4 P63 BXN63MA4**	511
2.0	530	1.1	685.6	6500	**F314_685.6 SX05 MXN05MA4**	506	**F314_685.6 P63 BXN63MA4**	507
2.0	533	2.1	690.1	8500	**F414_690.1 SX05 MXN05MA4**	510	**F414_690.1 P63 BXN63MA4**	511
2.2	479	1.3	619.9	6500	**F314_619.9 SX05 MXN05MA4**	506	**F314_619.9 P63 BXN63MA4**	507
2.3	456	0.9	589.7	6500	**F254_589.7 SX05 MXN05MA4**	502	**F254_589.7 P63 BXN63MA4**	503
2.3	447	1.3	578.6	6500	**F314_578.6 SX05 MXN05MA4**	506	**F314_578.6 P63 BXN63MA4**	507
2.5	425	2.6	549.8	8500	**F414_549.8 SX05 MXN05MA4**	510	**F414_549.8 P63 BXN63MA4**	511
2.6	408	1.0	527.3	6500	**F254_527.3 SX05 MXN05MA4**	502	**F254_527.3 P63 BXN63MA4**	503
2.6	408	1.5	527.8	6500	**F314_527.8 SX05 MXN05MA4**	506	**F314_527.8 P63 BXN63MA4**	507
2.9	360	1.1	466.0	6500	**F254_466.0 SX05 MXN05MA4**	502	**F254_466.0 P63 BXN63MA4**	503
2.9	358	1.7	462.6	6500	**F314_462.6 SX05 MXN05MA4**	506	**F314_462.6 P63 BXN63MA4**	507
3.1	336	1.2	434.9	6500	**F254_434.9 SX05 MXN05MA4**	502	**F254_434.9 P63 BXN63MA4**	503
3.1	335	3.3	433.7	8500	**F414_433.7 SX05 MXN05MA4**	510	**F414_433.7 P63 BXN63MA4**	511
3.2	324	1.9	418.9	6500	**F314_418.9 SX05 MXN05MA4**	506	**F314_418.9 P63 BXN63MA4**	507
3.4	304	1.3	393.9	6500	**F254_393.9 SX05 MXN05MA4**	502	**F254_393.9 P63 BXN63MA4**	503
3.6	296	2.0	374.4	6500			**F313_374.4 P63 BXN63MA4**	507
4.1	263	1.5	333.1	6500	**F253_333.1 SX05 MXN05MA4**	502	**F253_333.1 P63 BXN63MA4**	503
4.1	263	2.3	332.8	6500			**F313_332.8 P63 BXN63MA4**	507
4.3	250	1.0	316.9	4000	**F203_316.9 SX05 MXN05MA4**	498	**F203_316.9 P63 BXN63MA4**	499
4.6	232	2.6	293.8	6500			**F313_293.8 P63 BXN63MA4**	507
4.7	225	1.1	285.2	4000	**F203_285.2 SX05 MXN05MA4**	498	**F203_285.2 P63 BXN63MA4**	499

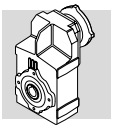

0.12 kW

n_2 min-1	M_2 Nm	S	i	R_{n2} N	IE3		IEC IE3	
4.7	228	1.8	288.1	6500	**F253_288.1 SX05 MXN05MA4**	502	**F253_288.1 P63 BXN63MA4**	503
5.3	202	1.2	255.3	4000	**F203_255.3 SX05 MXN05MA4**	498	**F203_255.3 P63 BXN63MA4**	499
5.3	202	2.0	256.1	6500	**F253_256.1 SX05 MXN05MA4**	502	**F253_256.1 P63 BXN63MA4**	503
5.3	200	3.0	253.6	6500			**F313_253.6 P63 BXN63MA4**	507
5.9	180	2.2	227.8	6500	**F253_227.8 SX05 MXN05MA4**	502	**F253_227.8 P63 BXN63MA4**	503
5.9	180	3.3	228.2	6500			**F313_228.2 P63 BXN63MA4**	507
6.5	165	1.5	209.3	4000	**F203_209.3 SX05 MXN05MA4**	498	**F203_209.3 P63 BXN63MA4**	499
7.0	153	2.6	193.6	6500	**F253_193.6 SX05 MXN05MA4**	502	**F253_193.6 P63 BXN63MA4**	503
7.3	146	1.7	184.9	4000	**F203_184.9 SX05 MXN05MA4**	498	**F203_184.9 P63 BXN63MA4**	499
7.7	138	2.9	174.2	6500	**F253_174.2 SX05 MXN05MA4**	502	**F253_174.2 P63 BXN63MA4**	503
7.8	136	1.8	172.6	4000	**F203_172.6 SX05 MXN05MA4**	498	**F203_172.6 P63 BXN63MA4**	499
8.6	123	2.0	156.3	4000	**F203_156.3 SX05 MXN05MA4**	498	**F203_156.3 P63 BXN63MA4**	499
8.7	123	3.2	155.9	6500	**F253_155.9 SX05 MXN05MA4**	502	**F253_155.9 P63 BXN63MA4**	503
9.4	113	3.5	143.0	6500	**F253_143.0 SX05 MXN05MA4**	502	**F253_143.0 P63 BXN63MA4**	503
10.2	107	2.3	132.2	4000	**F202_132.2 SX05 MXN05MA4**	498	**F202_132.2 P63 BXN63MA4**	499
10.6	103	1.4	127.1	2800	**F102_127.1 SX05 MXN05MA4**	494	**F102_127.1 P63 BXN63MA4**	495
11.8	92	2.7	114.3	4000	**F202_114.3 SX05 MXN05MA4**	498	**F202_114.3 P63 BXN63MA4**	499
12.7	86	1.6	106.0	2800	**F102_106.0 SX05 MXN05MA4**	494	**F102_106.0 P63 BXN63MA4**	495
13.3	82	3.0	101.6	4000	**F202_101.6 SX05 MXN05MA4**	498	**F202_101.6 P63 BXN63MA4**	499
14.8	74	1.9	91.5	2800	**F102_91.5 SX05 MXN05MA4**	494		
14.9	73	3.4	90.4	4000	**F202_90.4 SX05 MXN05MA4**	498		
16.6	66	2.1	81.3	2800	**F102_81.3 SX05 MXN05MA4**	494		
19.0	57	2.4	71.1	2800	**F102_71.1 SX05 MXN05MA4**	494	**F102_71.1 P63 BXN63MA4**	495
21.4	51	2.8	63.0	2800	**F102_63.0 SX05 MXN05MA4**	494	**F102_63.0 P63 BXN63MA4**	495
23.8	46	3.1	56.7	2800	**F102_56.7 SX05 MXN05MA4**	494	**F102_56.7 P63 BXN63MA4**	495
27.7	39	3.6	48.7	2800	**F102_48.7 SX05 MXN05MA4**	494	**F102_48.7 P63 BXN63MA4**	495
30.0	36	3.9	44.7	2800	**F102_44.7 SX05 MXN05MA4**	494	**F102_44.7 P63 BXN63MA4**	495
34.0	32	4.4	39.6	2800	**F102_39.6 SX05 MXN05MA4**	494	**F102_39.6 P63 BXN63MA4**	495
38.0	29	4.9	35.3	2800	**F102_35.3 SX05 MXN05MA4**	494	**F102_35.3 P63 BXN63MA4**	495
41.0	27	5.3	33.0	2800	**F102_33.0 SX05 MXN05MA4**	494	**F102_33.0 P63 BXN63MA4**	495
46.0	24	5.9	29.6	2800	**F102_29.6 SX05 MXN05MA4**	494	**F102_29.6 P63 BXN63MA4**	495
52.0	21	6.7	25.8	2800	**F102_25.8 SX05 MXN05MA4**	494	**F102_25.8 P63 BXN63MA4**	495
59.0	18	7.6	22.8	2700	**F102_22.8 SX05 MXN05MA4**	494	**F102_22.8 P63 BXN63MA4**	495
70.0	16	8.7	19.3	2560	**F102_19.3 SX05 MXN05MA4**	494	**F102_19.3 P63 BXN63MA4**	495
80.0	14	9.3	17.0	2450	**F102_17.0 SX05 MXN05MA4**	494	**F102_17.0 P63 BXN63MA4**	495
92.0	12	10.1	14.6	2340	**F102_14.6 SX05 MXN05MA4**	494	**F102_14.6 P63 BXN63MA4**	495
104.0	11	9.9	13.0	2250	**F102_13.0 SX05 MXN05MA4**	494	**F102_13.0 P63 BXN63MA4**	495
117.0	9	10.3	11.5	2160	**F102_11.5 SX05 MXN05MA4**	494	**F102_11.5 P63 BXN63MA4**	495
138.0	8	11.3	9.8	2050	**F102_9.8 SX05 MXN05MA4**	494	**F102_9.8 P63 BXN63MA4**	495
157.0	7	11.8	8.6	1970	**F102_8.6 SX05 MXN05MA4**	494	**F102_8.6 P63 BXN63MA4**	495
182.0	6	12.7	7.4	1870	**F102_7.4 SX05 MXN05MA4**	494	**F102_7.4 P63 BXN63MA4**	495

0.18 kW

n_2 min-1	M_2 Nm	S	i	R_{n2} N	IE2	IE3		IEC IE2	IE3	
1.3	1165	0.9	982.4	8500	**F414_982.4 S05 ME05B4**	**F414_982.4 S05 MX05B4**	510	**F414_982.4 P63 BE63B4**	**F414_982.4 P63 BX63B4**	511
1.5	1068	1.0	900.5	8500	**F414_900.5 S05 ME05B4**	**F414_900.5 S05 MX05B4**	510	**F414_900.5 P63 BE63B4**	**F414_900.5 P63 BX63B4**	511
1.6	965	1.1	813.8	8500	**F414_813.8 S05 ME05B4**	**F414_813.8 S05 MX05B4**	510	**F414_813.8 P63 BE63B4**	**F414_813.8 P63 BX63B4**	511
1.8	877	1.3	739.4	8500	**F414_739.4 S05 ME05B4**	**F414_739.4 S05 MX05B4**	510	**F414_739.4 P63 BE63B4**	**F414_739.4 P63 BX63B4**	511
1.9	818	1.3	690.1	8500	**F414_690.1 S05 ME05B4**	**F414_690.1 S05 MX05B4**	510	**F414_690.1 P63 BE63B4**	**F414_690.1 P63 BX63B4**	511
2.3	686	0.9	578.6	6500	**F314_578.6 S05 ME05B4**	**F314_578.6 S05 MX05B4**	506	**F314_578.6 P63 BE63B4**	**F314_578.6 P63 BX63B4**	507
2.4	652	1.7	549.8	8500	**F414_549.8 S05 ME05B4**	**F414_549.8 S05 MX05B4**	510	**F414_549.8 P63 BE63B4**	**F414_549.8 P63 BX63B4**	511
2.5	626	1.0	527.8	6500	**F314_527.8 S05 ME05B4**	**F314_527.8 S05 MX05B4**	506	**F314_527.8 P63 BE63B4**	**F314_527.8 P63 BX63B4**	507

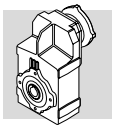

0.18 kW

n_2 min-1	M_2 Nm	S	i	R_{n2} N	IE2	IE3		IEC IE2	IEC IE3	
2.9	549	1.1	462.6	6500	**F314_462.6 S05 ME05B4**	**F314_462.6 S05 MX05B4**	506	**F314_462.6 P63 BE63B4**	**F314_462.6 P63 BX63B4**	507
3.0	514	2.1	433.7	8500	**F414_433.7 S05 ME05B4**	**F414_433.7 S05 MX05B4**	510	**F414_433.7 P63 BE63B4**	**F414_433.7 P63 BX63B4**	511
3.2	497	1.2	418.9	6500	**F314_418.9 S05 ME05B4**	**F314_418.9 S05 MX05B4**	506	**F314_418.9 P63 BE63B4**	**F314_418.9 P63 BX63B4**	507
3.4	467	0.9	393.9	6500	**F254_393.9 S05 ME05B4**	**F254_393.9 S05 MX05B4**	502	**F254_393.9 P63 BE63B4**	**F254_393.9 P63 BX63B4**	503
3.5	454	1.3	374.4	6500				**F313_374.4 P63 BE63B4**	**F313_374.4 P63 BX63B4**	507
3.8	418	2.6	344.8	8500				**F413_344.8 P63 BE63B4**	**F413_344.8 P63 BX63B4**	511
4.0	404	1.0	333.1	6500	**F253_333.1 S05 ME05B4**	**F253_333.1 S05 MX05B4**	502	**F253_333.1 P63 BE63B4**	**F253_333.1 P63 BX63B4**	503
4.0	403	1.5	332.8	6500				**F313_332.8 P63 BE63B4**	**F313_332.8 P63 BX63B4**	507
4.5	356	1.7	293.8	6500				**F313_293.8 P63 BE63B4**	**F313_293.8 P63 BX63B4**	507
4.5	359	3.1	296.6	8500				**F413_296.6 P63 BE63B4**	**F413_296.6 P63 BX63B4**	511
4.6	349	1.1	288.1	6500	**F253_288.1 S05 ME05B4**	**F253_288.1 S05 MX05B4**	502	**F253_288.1 P63 BE63B4**	**F253_288.1 P63 BX63B4**	503
4.9	323	3.4	266.9	8500				**F413_266.9 P63 BE63B4**	**F413_266.9 P63 BX63B4**	511
5.2	310	1.3	256.1	6500	**F253_256.1 S05 ME05B4**	**F253_256.1 S05 MX05B4**	502	**F253_256.1 P63 BE63B4**	**F253_256.1 P63 BX63B4**	503
5.2	307	2.0	253.6	6500				**F313_253.6 P63 BE63B4**	**F313_253.6 P63 BX63B4**	507
5.8	276	1.4	227.8	6500	**F253_227.8 S05 ME05B4**	**F253_227.8 S05 MX05B4**	502	**F253_227.8 P63 BE63B4**	**F253_227.8 P63 BX63B4**	503
5.8	277	2.2	228.2	6500				**F313_228.2 P63 BE63B4**	**F313_228.2 P63 BX63B4**	507
6.3	254	1.0	209.3	4000	**F203_209.3 S05 ME05B4**	**F203_209.3 S05 MX05B4**	498	**F203_209.3 P63 BE63B4**	**F203_209.3 P63 BX63B4**	499
6.5	245	2.4	202.3	6500				**F313_202.3 P63 BE63B4**	**F313_202.3 P63 BX63B4**	507
6.8	235	1.7	193.6	6500	**F253_193.6 S05 ME05B4**	**F253_193.6 S05 MX05B4**	502	**F253_193.6 P63 BE63B4**	**F253_193.6 P63 BX63B4**	503
7.1	224	1.1	184.9	4000	**F203_184.9 S05 ME05B4**	**F203_184.9 S05 MX05B4**	498	**F203_184.9 P63 BE63B4**	**F203_184.9 P63 BX63B4**	499
7.1	225	2.7	185.4	6500				**F313_185.4 P63 BE63B4**	**F313_185.4 P63 BX63B4**	507
7.6	209	1.2	172.6	4000	**F203_172.6 S05 ME05B4**	**F203_172.6 S05 MX05B4**	498	**F203_172.6 P63 BE63B4**	**F203_172.6 P63 BX63B4**	499
7.6	211	1.9	174.2	6500	**F253_174.2 S05 ME05B4**	**F253_174.2 S05 MX05B4**	502	**F253_174.2 P63 BE63B4**	**F253_174.2 P63 BX63B4**	503
7.9	202	3.0	166.8	6500				**F313_166.8 P63 BE63B4**	**F313_166.8 P63 BX63B4**	507
8.4	189	1.3	156.3	4000	**F203_156.3 S05 ME05B4**	**F203_156.3 S05 MX05B4**	498	**F203_156.3 P63 BE63B4**	**F203_156.3 P63 BX63B4**	499
8.5	189	2.1	155.9	6500	**F253_155.9 S05 ME05B4**	**F253_155.9 S05 MX05B4**	502	**F253_155.9 P63 BE63B4**	**F253_155.9 P63 BX63B4**	503
8.8	183	3.3	150.8	6500				**F313_150.8 P63 BE63B4**	**F313_150.8 P63 BX63B4**	507
9.2	173	2.3	143.0	6500	**F253_143.0 S05 ME05B4**	**F253_143.0 S05 MX05B4**	502	**F253_143.0 P63 BE63B4**	**F253_143.0 P63 BX63B4**	503
9.4	171	3.5	140.7	6500				**F313_140.7 P63 BE63B4**	**F313_140.7 P63 BX63B4**	507
10.0	164	1.5	132.2	4000	**F202_132.2 S05 ME05B4**	**F202_132.2 S05 MX05B4**	498	**F202_132.2 P63 BE63B4**	**F202_132.2 P63 BX63B4**	499
10.3	155	2.6	127.8	6500	**F253_127.8 S05 ME05B4**	**F253_127.8 S05 MX05B4**	502	**F253_127.8 P63 BE63B4**	**F253_127.8 P63 BX63B4**	503
10.4	157	0.9	127.1	2800	**F102_127.1 S05 ME05B4**	**F102_127.1 S05 MX05B4**	494	**F102_127.1 P63 BE63B4**	**F102_127.1 P63 BX63B4**	495
11.5	142	1.8	114.3	4000	**F202_114.3 S05 ME05B4**	**F202_114.3 S05 MX05B4**	498	**F202_114.3 P63 BE63B4**	**F202_114.3 P63 BX63B4**	499
11.7	137	2.9	113.0	6500	**F253_113.0 S05 ME05B4**	**F253_113.0 S05 MX05B4**	502	**F253_113.0 P63 BE63B4**	**F253_113.0 P63 BX63B4**	503
12.5	131	1.1	106.0	2800	**F102_106.0 S05 ME05B4**	**F102_106.0 S05 MX05B4**	494	**F102_106.0 P63 BE63B4**	**F102_106.0 P63 BX63B4**	495
12.5	128	3.1	105.4	6500	**F253_105.4 S05 ME05B4**	**F253_105.4 S05 MX05B4**	502	**F253_105.4 P63 BE63B4**	**F253_105.4 P63 BX63B4**	503
13.0	126	2.0	101.6	4000	**F202_101.6 S05 ME05B4**	**F202_101.6 S05 MX05B4**	498	**F202_101.6 P63 BE63B4**	**F202_101.6 P63 BX63B4**	499
13.8	116	3.5	95.5	6500	**F253_95.5 S05 ME05B4**	**F253_95.5 S05 MX05B4**	502	**F253_95.5 P63 BE63B4**	**F253_95.5 P63 BX63B4**	503
14.4	113	1.2	91.5	2800	**F102_91.5 S05 ME05B4**	**F102_91.5 S05 MX05B4**	494	**F102_91.5 P63 BE63B4**	**F102_91.5 P63 BX63B4**	495
14.6	112	2.2	90.4	4000	**F202_90.4 S05 ME05B4**	**F202_90.4 S05 MX05B4**	498	**F202_90.4 P63 BE63B4**	**F202_90.4 P63 BX63B4**	499
16.2	101	1.4	81.3	2800	**F102_81.3 S05 ME05B4**	**F102_81.3 S05 MX05B4**	494	**F102_81.3 P63 BE63B4**	**F102_81.3 P63 BX63B4**	495
17.2	95	2.6	76.8	4000	**F202_76.8 S05 ME05B4**	**F202_76.8 S05 MX05B4**	498	**F202_76.8 P63 BE63B4**	**F202_76.8 P63 BX63B4**	499
18.6	88	1.6	71.1	2800	**F102_71.1 S05 ME05B4**	**F102_71.1 S05 MX05B4**	494	**F102_71.1 P63 BE63B4**	**F102_71.1 P63 BX63B4**	495
19.1	86	2.9	69.1	4000	**F202_69.1 S05 ME05B4**	**F202_69.1 S05 MX05B4**	498	**F202_69.1 P63 BE63B4**	**F202_69.1 P63 BX63B4**	499
21.0	78	1.8	63.0	2800	**F102_63.0 S05 ME05B4**	**F102_63.0 S05 MX05B4**	494	**F102_63.0 P63 BE63B4**	**F102_63.0 P63 BX63B4**	495
21.3	77	3.3	61.9	4000	**F202_61.9 S05 ME05B4**	**F202_61.9 S05 MX05B4**	498	**F202_61.9 P63 BE63B4**	**F202_61.9 P63 BX63B4**	499
23.3	70	2.0	56.7	2800	**F102_56.7 S05 ME05B4**	**F102_56.7 S05 MX05B4**	494	**F102_56.7 P63 BE63B4**	**F102_56.7 P63 BX63B4**	495
27.1	60	2.3	48.7	2800	**F102_48.7 S05 ME05B4**	**F102_48.7 S05 MX05B4**	494	**F102_48.7 P63 BE63B4**	**F102_48.7 P63 BX63B4**	495
29.6	55	2.5	44.7	2800	**F102_44.7 S05 ME05B4**	**F102_44.7 S05 MX05B4**	494	**F102_44.7 P63 BE63B4**	**F102_44.7 P63 BX63B4**	495
33.0	49	2.9	39.6	2800	**F102_39.6 S05 ME05B4**	**F102_39.6 S05 MX05B4**	494	**F102_39.6 P63 BE63B4**	**F102_39.6 P63 BX63B4**	495
37.0	44	3.2	35.3	2800	**F102_35.3 S05 ME05B4**	**F102_35.3 S05 MX05B4**	494	**F102_35.3 P63 BE63B4**	**F102_35.3 P63 BX63B4**	495
40.0	41	3.4	33.0	2800	**F102_33.0 S05 ME05B4**	**F102_33.0 S05 MX05B4**	494	**F102_33.0 P63 BE63B4**	**F102_33.0 P63 BX63B4**	495
45.0	37	3.8	29.6	2800	**F102_29.6 S05 ME05B4**	**F102_29.6 S05 MX05B4**	494	**F102_29.6 P63 BE63B4**	**F102_29.6 P63 BX63B4**	495
51.0	32	4.4	25.8	2780	**F102_25.8 S05 ME05B4**	**F102_25.8 S05 MX05B4**	494	**F102_25.8 P63 BE63B4**	**F102_25.8 P63 BX63B4**	495
58.0	28	5.0	22.8	2680	**F102_22.8 S05 ME05B4**	**F102_22.8 S05 MX05B4**	494	**F102_22.8 P63 BE63B4**	**F102_22.8 P63 BX63B4**	495
68.0	24	5.7	19.3	2540	**F102_19.3 S05 ME05B4**	**F102_19.3 S05 MX05B4**	494	**F102_19.3 P63 BE63B4**	**F102_19.3 P63 BX63B4**	495
78.0	21	6.1	17.0	2440	**F102_17.0 S05 ME05B4**	**F102_17.0 S05 MX05B4**	494	**F102_17.0 P63 BE63B4**	**F102_17.0 P63 BX63B4**	495

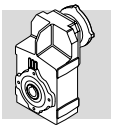

0.18 kW

n_2 min-1	M_2 Nm	S	i	R_{n2} N	IE2	IE3		IE2	IEC IE3	
90.0	18	6.6	14.6	2330	**F102_14.6 S05 ME05B4**	**F102_14.6 S05 MX05B4**	494	**F102_14.6 P63 BE63B4**	**F102_14.6 P63 BX63B4**	495
101.0	16	6.4	13.0	2240	**F102_13.0 S05 ME05B4**	**F102_13.0 S05 MX05B4**	494	**F102_13.0 P63 BE63B4**	**F102_13.0 P63 BX63B4**	495
114.0	14	6.7	11.5	2150	**F102_11.5 S05 ME05B4**	**F102_11.5 S05 MX05B4**	494	**F102_11.5 P63 BE63B4**	**F102_11.5 P63 BX63B4**	495
135.0	12	7.4	9.8	2040	**F102_9.8 S05 ME05B4**	**F102_9.8 S05 MX05B4**	494	**F102_9.8 P63 BE63B4**	**F102_9.8 P63 BX63B4**	495
154.0	11	7.7	8.6	1960	**F102_8.6 S05 ME05B4**	**F102_8.6 S05 MX05B4**	494	**F102_8.6 P63 BE63B4**	**F102_8.6 P63 BX63B4**	495
178.0	9	8.3	7.4	1870	**F102_7.4 S05 ME05B4**	**F102_7.4 S05 MX05B4**	494	**F102_7.4 P63 BE63B4**	**F102_7.4 P63 BX63B4**	495

0.18 kW

n_2 min-1	M_2 Nm	S	i	R_{n2} N	IE3		IEC IE3	
1.3	1165	0.9	982.4	8500	**F414_982.4 SX05 MXN05MB4**	510	**F414_982.4 P63 BXN63MB4**	511
1.5	1068	1.0	900.5	8500	**F414_900.5 SX05 MXN05MB4**	510	**F414_900.5 P63 BXN63MB4**	511
1.6	965	1.1	813.8	8500	**F414_813.8 SX05 MXN05MB4**	510	**F414_813.8 P63 BXN63MB4**	511
1.8	877	1.3	739.4	8500	**F414_739.4 SX05 MXN05MB4**	510	**F414_739.4 P63 BXN63MB4**	511
1.9	818	1.3	690.1	8500	**F414_690.1 SX05 MXN05MB4**	510	**F414_690.1 P63 BXN63MB4**	511
2.3	686	0.9	578.6	6500	**F314_578.6 SX05 MXN05MB4**	506	**F314_578.6 P63 BXN63MB4**	507
2.4	652	1.7	549.8	8500	**F414_549.8 SX05 MXN05MB4**	510	**F414_549.8 P63 BXN63MB4**	511
2.5	626	1.0	527.8	6500	**F314_527.8 SX05 MXN05MB4**	506	**F314_527.8 P63 BXN63MB4**	507
2.9	549	1.1	462.6	6500	**F314_462.6 SX05 MXN05MB4**	506	**F314_462.6 P63 BXN63MB4**	507
3.0	514	2.1	433.7	8500	**F414_433.7 SX05 MXN05MB4**	510	**F414_433.7 P63 BXN63MB4**	511
3.2	497	1.2	418.9	6500	**F314_418.9 SX05 MXN05MB4**	506	**F314_418.9 P63 BXN63MB4**	507
3.4	467	0.9	393.9	6500	**F254_393.9 SX05 MXN05MB4**	502	**F254_393.9 P63 BXN63MB4**	503
3.5	454	1.3	374.4	6500			**F313_374.4 P63 BXN63MB4**	507
3.8	418	2.6	344.8	8500			**F413_344.8 P63 BXN63MB4**	511
4.0	404	1.0	333.1	6500	**F253_333.1 SX05 MXN05MB4**	502	**F253_333.1 P63 BXN63MB4**	503
4.0	403	1.5	332.8	6500			**F313_332.8 P63 BXN63MB4**	507
4.5	356	1.7	293.8	6500			**F313_293.8 P63 BXN63MB4**	507
4.5	359	3.1	296.6	8500			**F413_296.6 P63 BXN63MB4**	511
4.6	349	1.1	288.1	6500	**F253_288.1 SX05 MXN05MB4**	502	**F253_288.1 P63 BXN63MB4**	503
4.9	323	3.4	266.9	8500			**F413_266.9 P63 BXN63MB4**	511
5.2	310	1.3	256.1	6500	**F253_256.1 SX05 MXN05MB4**	502	**F253_256.1 P63 BXN63MB4**	503
5.2	307	2.0	253.6	6500			**F313_253.6 P63 BXN63MB4**	507
5.8	276	1.4	227.8	6500	**F253_227.8 SX05 MXN05MB4**	502	**F253_227.8 P63 BXN63MB4**	503
5.8	277	2.2	228.2	6500			**F313_228.2 P63 BXN63MB4**	507
6.3	254	1.0	209.3	4000	**F203_209.3 SX05 MXN05MB4**	498	**F203_209.3 P63 BXN63MB4**	499
6.5	245	2.4	202.3	6500			**F313_202.3 P63 BXN63MB4**	507
6.8	235	1.7	193.6	6500	**F253_193.6 SX05 MXN05MB4**	502	**F253_193.6 P63 BXN63MB4**	503
7.1	224	1.1	184.9	4000	**F203_184.9 SX05 MXN05MB4**	498	**F203_184.9 P63 BXN63MB4**	499
7.1	225	2.7	185.4	6500			**F313_185.4 P63 BXN63MB4**	507
7.6	209	1.2	172.6	4000	**F203_172.6 SX05 MXN05MB4**	498	**F203_172.6 P63 BXN63MB4**	499
7.6	211	1.9	174.2	6500	**F253_174.2 SX05 MXN05MB4**	502	**F253_174.2 P63 BXN63MB4**	503
7.9	202	3.0	166.8	6500			**F313_166.8 P63 BXN63MB4**	507
8.4	189	1.3	156.3	4000	**F203_156.3 SX05 MXN05MB4**	498	**F203_156.3 P63 BXN63MB4**	499
8.5	189	2.1	155.9	6500	**F253_155.9 SX05 MXN05MB4**	502	**F253_155.9 P63 BXN63MB4**	503
8.8	183	3.3	150.8	6500			**F313_150.8 P63 BXN63MB4**	507
9.2	173	2.3	143.0	6500	**F253_143.0 SX05 MXN05MB4**	502	**F253_143.0 P63 BXN63MB4**	503
9.4	171	3.5	140.7	6500			**F313_140.7 P63 BXN63MB4**	507
10.0	164	1.5	132.2	4000	**F202_132.2 SX05 MXN05MB4**	498	**F202_132.2 P63 BXN63MB4**	499
10.3	155	2.6	127.8	6500	**F253_127.8 SX05 MXN05MB4**	502	**F253_127.8 P63 BXN63MB4**	503
10.4	157	0.9	127.1	2800	**F102_127.1 SX05 MXN05MB4**	494	**F102_127.1 P63 BXN63MB4**	495
11.5	142	1.8	114.3	4000	**F202_114.3 SX05 MXN05MB4**	498	**F202_114.3 P63 BXN63MB4**	499
11.7	137	2.9	113.0	6500	**F253_113.0 SX05 MXN05MB4**	502	**F253_113.0 P63 BXN63MB4**	503
12.5	131	1.1	106.0	2800	**F102_106.0 SX05 MXN05MB4**	494	**F102_106.0 P63 BXN63MB4**	495

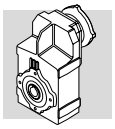

0.18 kW

n_2 min-1	M_2 Nm	S	i	R_{n2} N	IE3		IEC IE3	
12.5	128	3.1	105.4	6500	**F253_105.4 SX05 MXN05MB4**	502	**F253_105.4 P63 BXN63MB4**	503
13.0	126	2.0	101.6	4000	**F202_101.6 SX05 MXN05MB4**	498	**F202_101.6 P63 BXN63MB4**	499
13.8	116	3.5	95.5	6500	**F253_95.5 SX05 MXN05MB4**	502	**F253_95.5 P63 BXN63MB4**	503
14.4	113	1.2	91.5	2800	**F102_91.5 SX05 MXN05MB4**	494	**F102_91.5 P63 BXN63MB4**	495
14.6	112	2.2	90.4	4000	**F202_90.4 SX05 MXN05MB4**	498	**F202_90.4 P63 BXN63MB4**	499
16.2	101	1.4	81.3	2800	**F102_81.3 SX05 MXN05MB4**	494	**F102_81.3 P63 BXN63MB4**	495
17.2	95	2.6	76.8	4000	**F202_76.8 SX05 MXN05MB4**	498	**F202_76.8 P63 BXN63MB4**	499
18.6	88	1.6	71.1	2800	**F102_71.1 SX05 MXN05MB4**	494	**F102_71.1 P63 BXN63MB4**	495
19.1	86	2.9	69.1	4000	**F202_69.1 SX05 MXN05MB4**	498	**F202_69.1 P63 BXN63MB4**	499
21.0	78	1.8	63.0	2800	**F102_63.0 SX05 MXN05MB4**	494	**F102_63.0 P63 BXN63MB4**	495
21.3	77	3.3	61.9	4000	**F202_61.9 SX05 MXN05MB4**	498	**F202_61.9 P63 BXN63MB4**	499
23.3	70	2.0	56.7	2800	**F102_56.7 SX05 MXN05MB4**	494	**F102_56.7 P63 BXN63MB4**	495
27.1	60	2.3	48.7	2800	**F102_48.7 SX05 MXN05MB4**	494	**F102_48.7 P63 BXN63MB4**	495
29.6	55	2.5	44.7	2800	**F102_44.7 SX05 MXN05MB4**	494	**F102_44.7 P63 BXN63MB4**	495
33.0	49	2.9	39.6	2800	**F102_39.6 SX05 MXN05MB4**	494	**F102_39.6 P63 BXN63MB4**	495
37.0	44	3.2	35.3	2800	**F102_35.3 SX05 MXN05MB4**	494	**F102_35.3 P63 BXN63MB4**	495
40.0	41	3.4	33.0	2800	**F102_33.0 SX05 MXN05MB4**	494	**F102_33.0 P63 BXN63MB4**	495
45.0	37	3.8	29.6	2800	**F102_29.6 SX05 MXN05MB4**	494	**F102_29.6 P63 BXN63MB4**	495
51.0	32	4.4	25.8	2780	**F102_25.8 SX05 MXN05MB4**	494	**F102_25.8 P63 BXN63MB4**	495
58.0	28	5.0	22.8	2680	**F102_22.8 SX05 MXN05MB4**	494	**F102_22.8 P63 BXN63MB4**	495
68.0	24	5.7	19.3	2540	**F102_19.3 SX05 MXN05MB4**	494	**F102_19.3 P63 BXN63MB4**	495
78.0	21	6.1	17.0	2440	**F102_17.0 SX05 MXN05MB4**	494	**F102_17.0 P63 BXN63MB4**	495
90.0	18	6.6	14.6	2330	**F102_14.6 SX05 MXN05MB4**	494	**F102_14.6 P63 BXN63MB4**	495
101.0	16	6.4	13.0	2240	**F102_13.0 SX05 MXN05MB4**	494	**F102_13.0 P63 BXN63MB4**	495
114.0	14	6.7	11.5	2150	**F102_11.5 SX05 MXN05MB4**	494	**F102_11.5 P63 BXN63MB4**	495
135.0	12	7.4	9.8	2040	**F102_9.8 SX05 MXN05MB4**	494	**F102_9.8 P63 BXN63MB4**	495
154.0	11	7.7	8.6	1960	**F102_8.6 SX05 MXN05MB4**	494	**F102_8.6 P63 BXN63MB4**	495
178.0	9	8.3	7.4	1870	**F102_7.4 SX05 MXN05MB4**	494	**F102_7.4 P63 BXN63MB4**	495

0.25 kW

n_2 min-1	M_2 Nm	S	i	R_{n2} N	IE2	IE3		IEC IE2	IE3	
1.7	1282	0.9	813.8	8500	**F414_813.8 S1 ME1SA4**	**F414_813.8 S1 MX1SA4**	510	**F414_813.8 P71 BE71A4**	**F414_813.8 P71 BX71A4**	511
1.8	1199	0.9	739.4	8500	**F414_739.4 S1 ME1SA4**	**F414_739.4 S1 MX1SA4**	510	**F414_739.4 P71 BE71A4**	**F414_739.4 P71 BX71A4**	511
1.9	1119	1.0	690.1	8500	**F414_690.1 S1 ME1SA4**	**F414_690.1 S1 MX1SA4**	510	**F414_690.1 P71 BE71A4**	**F414_690.1 P71 BX71A4**	511
2.4	892	1.2	549.8	8500	**F414_549.8 S1 ME1SA4**	**F414_549.8 S1 MX1SA4**	510	**F414_549.8 P71 BE71A4**	**F414_549.8 P71 BX71A4**	511
3.1	704	1.6	433.7	8500	**F414_433.7 S1 ME1SA4**	**F414_433.7 S1 MX1SA4**	510	**F414_433.7 P71 BE71A4**	**F414_433.7 P71 BX71A4**	511
3.2	679	0.9	418.9	6500	**F314_418.9 S1 ME1SA4**	**F314_418.9 S1 MX1SA4**	506	**F314_418.9 P71 BE71A4**	**F314_418.9 P71 BX71A4**	507
3.7	603	1.0	374.4	6500	**F313_374.4 S1 ME1SA4**	**F313_374.4 S1 MX1SA4**	506	**F313_374.4 P71 BE71A4**	**F313_374.4 P71 BX71A4**	507
4.0	555	2.0	344.8	8500				**F413_344.8 P71 BE71A4**	**F413_344.8 P71 BX71A4**	511
4.1	536	1.1	332.8	6500	**F313_332.8 S1 ME1SA4**	**F313_332.8 S1 MX1SA4**	506	**F313_332.8 P71 BE71A4**	**F313_332.8 P71 BX71A4**	507
4.7	473	1.3	293.8	6500	**F313_293.8 S1 ME1SA4**	**F313_293.8 S1 MX1SA4**	506	**F313_293.8 P71 BE71A4**	**F313_293.8 P71 BX71A4**	507
4.7	477	2.3	296.6	8500				**F413_296.6 P71 BE71A4**	**F413_296.6 P71 BX71A4**	511
5.2	425	0.9	256.1	6500	**F253_256.1 S1 ME1SA4**	**F253_256.1 S1 MX1SA4**	502	**F253_256.1 P71 BE71A4**	**F253_256.1 P71 BX71A4**	503
5.2	430	2.6	266.9	8500				**F413_266.9 P71 BE71A4**	**F413_266.9 P71 BX71A4**	511
5.4	408	1.5	253.6	6500	**F313_253.6 S1 ME1SA4**	**F313_253.6 S1 MX1SA4**	506	**F313_253.6 P71 BE71A4**	**F313_253.6 P71 BX71A4**	507
5.7	387	2.8	240.1	8500				**F413_240.1 P71 BE71A4**	**F413_240.1 P71 BX71A4**	511
5.9	378	1.1	227.8	6500	**F253_227.8 S1 ME1SA4**	**F253_227.8 S1 MX1SA4**	502	**F253_227.8 P71 BE71A4**	**F253_227.8 P71 BX71A4**	503
6.0	367	1.6	228.2	6500	**F313_228.2 S1 ME1SA4**	**F313_228.2 S1 MX1SA4**	506	**F313_228.2 P71 BE71A4**	**F313_228.2 P71 BX71A4**	507
6.3	354	3.1	220.1	8500				**F413_220.1 P71 BE71A4**	**F413_220.1 P71 BX71A4**	511
6.8	326	1.8	202.3	6500	**F313_202.3 S1 ME1SA4**	**F313_202.3 S1 MX1SA4**	506	**F313_202.3 P71 BE71A4**	**F313_202.3 P71 BX71A4**	507
6.9	321	1.2	193.6	6500	**F253_193.6 S1 ME1SA4**	**F253_193.6 S1 MX1SA4**	502	**F253_193.6 P71 BE71A4**	**F253_193.6 P71 BX71A4**	503
6.9	320	3.4	198.9	8500				**F413_198.9 P71 BE71A4**	**F413_198.9 P71 BX71A4**	511

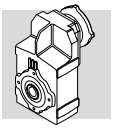

0.25 kW

n_2 min-1	M_2 Nm	S	i	R_{n2} N	IE2	IE3		IEC IE2	IEC IE3	
7.4	299	2.0	185.4	6500	**F313_185.4 S1 ME1SA4**	**F313_185.4 S1 MX1SA4**	506	**F313_185.4 P71 BE71A4**	**F313_185.4 P71 BX71A4**	507
7.7	289	1.4	174.2	6500	**F253_174.2 S1 ME1SA4**	**F253_174.2 S1 MX1SA4**	502	**F253_174.2 P71 BE71A4**	**F253_174.2 P71 BX71A4**	503
8.0	278	0.9	172.6	4000	**F203_172.6 S1 ME1SA4**	**F203_172.6 S1 MX1SA4**	498	**F203_172.6 P71 BE71A4**	**F203_172.6 P71 BX71A4**	499
8.3	268	2.2	166.8	6500	**F313_166.8 S1 ME1SA4**	**F313_166.8 S1 MX1SA4**	506	**F313_166.8 P71 BE71A4**	**F313_166.8 P71 BX71A4**	507
8.6	259	1.0	156.3	4000	**F203_156.3 S1 ME1SA4**	**F203_156.3 S1 MX1SA4**	498	**F203_156.3 P71 BE71A4**	**F203_156.3 P71 BX71A4**	499
8.6	259	1.5	155.9	6500	**F253_155.9 S1 ME1SA4**	**F253_155.9 S1 MX1SA4**	502	**F253_155.9 P71 BE71A4**	**F253_155.9 P71 BX71A4**	503
9.2	243	2.5	150.8	6500	**F313_150.8 S1 ME1SA4**	**F313_150.8 S1 MX1SA4**	506	**F313_150.8 P71 BE71A4**	**F313_150.8 P71 BX71A4**	507
9.7	230	1.7	143.0	6500	**F253_143.0 S1 ME1SA4**	**F253_143.0 S1 MX1SA4**	502	**F253_143.0 P71 BE71A4**	**F253_143.0 P71 BX71A4**	503
9.8	227	2.6	140.7	6500	**F313_140.7 S1 ME1SA4**	**F313_140.7 S1 MX1SA4**	506	**F313_140.7 P71 BE71A4**	**F313_140.7 P71 BX71A4**	507
10.1	224	1.1	132.2	4000	**F202_132.2 S1 ME1SA4**	**F202_132.2 S1 MX1SA4**	498	**F202_132.2 P71 BE71A4**	**F202_132.2 P71 BX71A4**	499
10.5	212	1.9	127.8	6500	**F253_127.8 S1 ME1SA4**	**F253_127.8 S1 MX1SA4**	502	**F253_127.8 P71 BE71A4**	**F253_127.8 P71 BX71A4**	503
10.7	207	2.9	128.4	6500	**F313_128.4 S1 ME1SA4**	**F313_128.4 S1 MX1SA4**	506	**F313_128.4 P71 BE71A4**	**F313_128.4 P71 BX71A4**	507
11.7	194	1.3	114.3	4000	**F202_114.3 S1 ME1SA4**	**F202_114.3 S1 MX1SA4**	498	**F202_114.3 P71 BE71A4**	**F202_114.3 P71 BX71A4**	499
12.2	182	2.2	113.0	6500	**F253_113.0 S1 ME1SA4**	**F253_113.0 S1 MX1SA4**	502	**F253_113.0 P71 BE71A4**	**F253_113.0 P71 BX71A4**	503
12.3	181	3.3	112.5	6500	**F313_112.5 S1 ME1SA4**	**F313_112.5 S1 MX1SA4**	506	**F313_112.5 P71 BE71A4**	**F313_112.5 P71 BX71A4**	507
12.7	175	2.3	105.4	6500	**F253_105.4 S1 ME1SA4**	**F253_105.4 S1 MX1SA4**	502	**F253_105.4 P71 BE71A4**	**F253_105.4 P71 BX71A4**	503
13.2	172	1.5	101.6	4000	**F202_101.6 S1 ME1SA4**	**F202_101.6 S1 MX1SA4**	498	**F202_101.6 P71 BE71A4**	**F202_101.6 P71 BX71A4**	499
14.0	158	2.5	95.5	6500	**F253_95.5 S1 ME1SA4**	**F253_95.5 S1 MX1SA4**	502	**F253_95.5 P71 BE71A4**	**F253_95.5 P71 BX71A4**	503
14.6	155	0.9	91.5	2800	**F102_91.5 S1 ME1SA4**	**F102_91.5 S1 MX1SA4**	494	**F102_91.5 P71 BE71A4**	**F102_91.5 P71 BX71A4**	495
14.8	153	1.6	90.4	4000	**F202_90.4 S1 ME1SA4**	**F202_90.4 S1 MX1SA4**	498	**F202_90.4 P71 BE71A4**	**F202_90.4 P71 BX71A4**	499
16.1	138	2.9	83.4	6500	**F253_83.4 S1 ME1SA4**	**F253_83.4 S1 MX1SA4**	502	**F253_83.4 P71 BE71A4**	**F253_83.4 P71 BX71A4**	503
16.5	138	1.0	81.3	2800	**F102_81.3 S1 ME1SA4**	**F102_81.3 S1 MX1SA4**	494	**F102_81.3 P71 BE71A4**	**F102_81.3 P71 BX71A4**	495
17.4	130	1.9	76.8	4000	**F202_76.8 S1 ME1SA4**	**F202_76.8 S1 MX1SA4**	498	**F202_76.8 P71 BE71A4**	**F202_76.8 P71 BX71A4**	499
17.5	127	3.2	76.6	6420	**F253_76.6 S1 ME1SA4**	**F253_76.6 S1 MX1SA4**	502	**F253_76.6 P71 BE71A4**	**F253_76.6 P71 BX71A4**	503
18.8	120	1.2	71.1	2800	**F102_71.1 S1 ME1SA4**	**F102_71.1 S1 MX1SA4**	494	**F102_71.1 P71 BE71A4**	**F102_71.1 P71 BX71A4**	495
19.4	117	2.1	69.1	4000	**F202_69.1 S1 ME1SA4**	**F202_69.1 S1 MX1SA4**	498	**F202_69.1 P71 BE71A4**	**F202_69.1 P71 BX71A4**	499
21.3	107	1.3	63.0	2800	**F102_63.0 S1 ME1SA4**	**F102_63.0 S1 MX1SA4**	494	**F102_63.0 P71 BE71A4**	**F102_63.0 P71 BX71A4**	495
21.7	105	2.4	61.9	4000	**F202_61.9 S1 ME1SA4**	**F202_61.9 S1 MX1SA4**	498	**F202_61.9 P71 BE71A4**	**F202_61.9 P71 BX71A4**	499
23.6	96	1.5	56.7	2800	**F102_56.7 S1 ME1SA4**	**F102_56.7 S1 MX1SA4**	494	**F102_56.7 P71 BE71A4**	**F102_56.7 P71 BX71A4**	495
23.6	96	2.6	56.7	4000	**F202_56.7 S1 ME1SA4**	**F202_56.7 S1 MX1SA4**	498	**F202_56.7 P71 BE71A4**	**F202_56.7 P71 BX71A4**	499
26.4	86	2.9	50.7	4000	**F202_50.7 S1 ME1SA4**	**F202_50.7 S1 MX1SA4**	498	**F202_50.7 P71 BE71A4**	**F202_50.7 P71 BX71A4**	499
27.5	83	1.7	48.7	2800	**F102_48.7 S1 ME1SA4**	**F102_48.7 S1 MX1SA4**	494	**F102_48.7 P71 BE71A4**	**F102_48.7 P71 BX71A4**	495
29.9	76	3.3	44.8	3870	**F202_44.8 S1 ME1SA4**	**F202_44.8 S1 MX1SA4**	498	**F202_44.8 P71 BE71A4**	**F202_44.8 P71 BX71A4**	499
30.0	76	1.9	44.7	2800	**F102_44.7 S1 ME1SA4**	**F102_44.7 S1 MX1SA4**	494	**F102_44.7 P71 BE71A4**	**F102_44.7 P71 BX71A4**	495
34.0	67	2.1	39.6	2800	**F102_39.6 S1 ME1SA4**	**F102_39.6 S1 MX1SA4**	494	**F102_39.6 P71 BE71A4**	**F102_39.6 P71 BX71A4**	495
38.0	60	2.3	35.3	2800	**F102_35.3 S1 ME1SA4**	**F102_35.3 S1 MX1SA4**	494	**F102_35.3 P71 BE71A4**	**F102_35.3 P71 BX71A4**	495
41.0	56	2.5	33.0	2800	**F102_33.0 S1 ME1SA4**	**F102_33.0 S1 MX1SA4**	494	**F102_33.0 P71 BE71A4**	**F102_33.0 P71 BX71A4**	495
45.0	50	2.8	29.6	2800	**F102_29.6 S1 ME1SA4**	**F102_29.6 S1 MX1SA4**	494	**F102_29.6 P71 BE71A4**	**F102_29.6 P71 BX71A4**	495
52.0	44	3.2	25.8	2750	**F102_25.8 S1 ME1SA4**	**F102_25.8 S1 MX1SA4**	494	**F102_25.8 P71 BE71A4**	**F102_25.8 P71 BX71A4**	495
59.0	39	3.6	22.8	2650	**F102_22.8 S1 ME1SA4**	**F102_22.8 S1 MX1SA4**	494	**F102_22.8 P71 BE71A4**	**F102_22.8 P71 BX71A4**	495
69.0	33	4.2	19.3	2520	**F102_19.3 S1 ME1SA4**	**F102_19.3 S1 MX1SA4**	494	**F102_19.3 P71 BE71A4**	**F102_19.3 P71 BX71A4**	495
81.0	28	4.6	17.0	2420	**F102_17.0 S1 ME1SA4**	**F102_17.0 S1 MX1SA4**	494	**F102_17.0 P71 BE71A4**	**F102_17.0 P71 BX71A4**	495
91.0	25	4.8	14.6	2310	**F102_14.6 S1 ME1SA4**	**F102_14.6 S1 MX1SA4**	494	**F102_14.6 P71 BE71A4**	**F102_14.6 P71 BX71A4**	495
103.0	22	4.7	13.0	2230	**F102_13.0 S1 ME1SA4**	**F102_13.0 S1 MX1SA4**	494	**F102_13.0 P71 BE71A4**	**F102_13.0 P71 BX71A4**	495
120.0	19	5.1	11.5	2140	**F102_11.5 S1 ME1SA4**	**F102_11.5 S1 MX1SA4**	494	**F102_11.5 P71 BE71A4**	**F102_11.5 P71 BX71A4**	495
137.0	17	5.4	9.8	2030	**F102_9.8 S1 ME1SA4**	**F102_9.8 S1 MX1SA4**	494	**F102_9.8 P71 BE71A4**	**F102_9.8 P71 BX71A4**	495
161.0	14	5.8	8.6	1950	**F102_8.6 S1 ME1SA4**	**F102_8.6 S1 MX1SA4**	494	**F102_8.6 P71 BE71A4**	**F102_8.6 P71 BX71A4**	495
181.0	13	6.1	7.4	1860	**F102_7.4 S1 ME1SA4**	**F102_7.4 S1 MX1SA4**	494	**F102_7.4 P71 BE71A4**	**F102_7.4 P71 BX71A4**	495

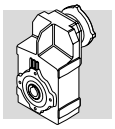

0.25 kW

n_2 min^{-1}	M_2 Nm	S	i	R_{n2} N	IE3		IEC IE3	
1.7	1282	0.9	813.8	8500	**F414_813.8 SX10 MXN10MA4**	510	**F414_813.8 P71 BXN71MA4**	511
1.8	1199	0.9	739.4	8500	**F414_739.4 SX10 MXN10MA4**	510	**F414_739.4 P71 BXN71MA4**	511
1.9	1119	1.0	690.1	8500	**F414_690.1 SX10 MXN10MA4**	510	**F414_690.1 P71 BXN71MA4**	511
2.4	892	1.2	549.8	8500	**F414_549.8 SX10 MXN10MA4**	510	**F414_549.8 P71 BXN71MA4**	511
3.1	704	1.6	433.7	8500	**F414_433.7 SX10 MXN10MA4**	510	**F414_433.7 P71 BXN71MA4**	511
3.2	679	0.9	418.9	6500	**F314_418.9 SX10 MXN10MA4**	506	**F314_418.9 P71 BXN71MA4**	507
3.7	603	1.0	374.4	6500	**F313_374.4 SX10 MXN10MA4**	506	**F313_374.4 P71 BXN71MA4**	507
4.0	555	2.0	344.8	8500			**F413_344.8 P71 BXN71MA4**	511
4.1	536	1.1	332.8	6500	**F313_332.8 SX10 MXN10MA4**	506	**F313_332.8 P71 BXN71MA4**	507
4.7	473	1.3	293.8	6500	**F313_293.8 SX10 MXN10MA4**	506	**F313_293.8 P71 BXN71MA4**	507
4.7	477	2.3	296.6	8500			**F413_296.6 P71 BXN71MA4**	511
5.2	425	0.9	256.1	6500	**F253_256.1 SX10 MXN10MA4**	502	**F253_256.1 P71 BXN71MA4**	503
5.2	430	2.6	266.9	8500			**F413_266.9 P71 BXN71MA4**	511
5.4	408	1.5	253.6	6500	**F313_253.6 SX10 MXN10MA4**	506	**F313_253.6 P71 BXN71MA4**	507
5.7	387	2.8	240.1	8500			**F413_240.1 P71 BXN71MA4**	511
5.9	378	1.1	227.8	6500	**F253_227.8 SX10 MXN10MA4**	502	**F253_227.8 P71 BXN71MA4**	503
6.0	367	1.6	228.2	6500	**F313_228.2 SX10 MXN10MA4**	506	**F313_228.2 P71 BXN71MA4**	507
6.3	354	3.1	220.1	8500			**F413_220.1 P71 BXN71MA4**	511
6.8	326	1.8	202.3	6500	**F313_202.3 SX10 MXN10MA4**	506	**F313_202.3 P71 BXN71MA4**	507
6.9	321	1.2	193.6	6500	**F253_193.6 SX10 MXN10MA4**	502	**F253_193.6 P71 BXN71MA4**	503
6.9	320	3.4	198.9	8500			**F413_198.9 P71 BXN71MA4**	511
7.4	299	2.0	185.4	6500	**F313_185.4 SX10 MXN10MA4**	506	**F313_185.4 P71 BXN71MA4**	507
7.7	289	1.4	174.2	6500	**F253_174.2 SX10 MXN10MA4**	502	**F253_174.2 P71 BXN71MA4**	503
8.0	278	0.9	172.6	4000	**F203_172.6 SX10 MXN10MA4**	498	**F203_172.6 P71 BXN71MA4**	499
8.3	268	2.2	166.8	6500	**F313_166.8 SX10 MXN10MA4**	506	**F313_166.8 P71 BXN71MA4**	507
8.6	259	1.0	156.3	4000	**F203_156.3 SX10 MXN10MA4**	498	**F203_156.3 P71 BXN71MA4**	499
8.6	259	1.5	155.9	6500	**F253_155.9 SX10 MXN10MA4**	502	**F253_155.9 P71 BXN71MA4**	503
9.2	243	2.5	150.8	6500	**F313_150.8 SX10 MXN10MA4**	506	**F313_150.8 P71 BXN71MA4**	507
9.7	230	1.7	143.0	6500	**F253_143.0 SX10 MXN10MA4**	502	**F253_143.0 P71 BXN71MA4**	503
9.8	227	2.6	140.7	6500	**F313_140.7 SX10 MXN10MA4**	506	**F313_140.7 P71 BXN71MA4**	507
10.1	224	1.1	132.2	4000	**F202_132.2 SX10 MXN10MA4**	498	**F202_132.2 P71 BXN71MA4**	499
10.5	212	1.9	127.8	6500	**F253_127.8 SX10 MXN10MA4**	502	**F253_127.8 P71 BXN71MA4**	503
10.7	207	2.9	128.4	6500	**F313_128.4 SX10 MXN10MA4**	506	**F313_128.4 P71 BXN71MA4**	507
11.7	194	1.3	114.3	4000	**F202_114.3 SX10 MXN10MA4**	498	**F202_114.3 P71 BXN71MA4**	499
12.2	182	2.2	113.0	6500	**F253_113.0 SX10 MXN10MA4**	502	**F253_113.0 P71 BXN71MA4**	503
12.3	181	3.3	112.5	6500	**F313_112.5 SX10 MXN10MA4**	506	**F313_112.5 P71 BXN71MA4**	507
12.7	175	2.3	105.4	6500	**F253_105.4 SX10 MXN10MA4**	502	**F253_105.4 P71 BXN71MA4**	503
13.2	172	1.5	101.6	4000	**F202_101.6 SX10 MXN10MA4**	498	**F202_101.6 P71 BXN71MA4**	499
14.0	158	2.5	95.5	6500	**F253_95.5 SX10 MXN10MA4**	502	**F253_95.5 P71 BXN71MA4**	503
14.6	155	0.9	91.5	2800	**F102_91.5 SX10 MXN10MA4**	494	**F102_91.5 P71 BXN71MA4**	495
14.8	153	1.6	90.4	4000	**F202_90.4 SX10 MXN10MA4**	498	**F202_90.4 P71 BXN71MA4**	499
16.1	138	2.9	83.4	6500	**F253_83.4 SX10 MXN10MA4**	502	**F253_83.4 P71 BXN71MA4**	503
16.5	138	1.0	81.3	2800	**F102_81.3 SX10 MXN10MA4**	494	**F102_81.3 P71 BXN71MA4**	495
17.4	130	1.9	76.8	4000	**F202_76.8 SX10 MXN10MA4**	498	**F202_76.8 P71 BXN71MA4**	499
17.5	127	3.2	76.6	6420	**F253_76.6 SX10 MXN10MA4**	502	**F253_76.6 P71 BXN71MA4**	503
18.8	120	1.2	71.1	2800	**F102_71.1 SX10 MXN10MA4**	494	**F102_71.1 P71 BXN71MA4**	495
19.4	117	2.1	69.1	4000	**F202_69.1 SX10 MXN10MA4**	498	**F202_69.1 P71 BXN71MA4**	499
21.3	107	1.3	63.0	2800	**F102_63.0 SX10 MXN10MA4**	494	**F102_63.0 P71 BXN71MA4**	495
21.7	105	2.4	61.9	4000	**F202_61.9 SX10 MXN10MA4**	498	**F202_61.9 P71 BXN71MA4**	499
23.6	96	1.5	56.7	2800	**F102_56.7 SX10 MXN10MA4**	494	**F102_56.7 P71 BXN71MA4**	495
23.6	96	2.6	56.7	4000	**F202_56.7 SX10 MXN10MA4**	498	**F202_56.7 P71 BXN71MA4**	499
26.4	86	2.9	50.7	4000	**F202_50.7 SX10 MXN10MA4**	498	**F202_50.7 P71 BXN71MA4**	499
27.5	83	1.7	48.7	2800	**F102_48.7 SX10 MXN10MA4**	494	**F102_48.7 P71 BXN71MA4**	495
29.9	76	3.3	44.8	3870	**F202_44.8 SX10 MXN10MA4**	498	**F202_44.8 P71 BXN71MA4**	499
30.0	76	1.9	44.7	2800	**F102_44.7 SX10 MXN10MA4**	494	**F102_44.7 P71 BXN71MA4**	495
34.0	67	2.1	39.6	2800	**F102_39.6 SX10 MXN10MA4**	494	**F102_39.6 P71 BXN71MA4**	495
38.0	60	2.3	35.3	2800	**F102_35.3 SX10 MXN10MA4**	494	**F102_35.3 P71 BXN71MA4**	495

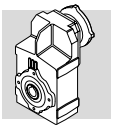

0.25 kW

n_2 min^{-1}	M_2 Nm	S	i	R_{n2} N	 IE3		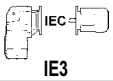 IEC IE3	
41.0	56	2.5	33.0	2800	**F102_33.0 SX10 MXN10MA4**	494	**F102_33.0 P71 BXN71MA4**	495
45.0	50	2.8	29.6	2800	**F102_29.6 SX10 MXN10MA4**	494	**F102_29.6 P71 BXN71MA4**	495
52.0	44	3.2	25.8	2750	**F102_25.8 SX10 MXN10MA4**	494	**F102_25.8 P71 BXN71MA4**	495
59.0	39	3.6	22.8	2650	**F102_22.8 SX10 MXN10MA4**	494	**F102_22.8 P71 BXN71MA4**	495
69.0	33	4.2	19.3	2520	**F102_19.3 SX10 MXN10MA4**	494	**F102_19.3 P71 BXN71MA4**	495
81.0	28	4.6	17.0	2420	**F102_17.0 SX10 MXN10MA4**	494	**F102_17.0 P71 BXN71MA4**	495
91.0	25	4.8	14.6	2310	**F102_14.6 SX10 MXN10MA4**	494	**F102_14.6 P71 BXN71MA4**	495
103.0	22	4.7	13.0	2230	**F102_13.0 SX10 MXN10MA4**	494	**F102_13.0 P71 BXN71MA4**	495
120.0	19	5.1	11.5	2140	**F102_11.5 SX10 MXN10MA4**	494	**F102_11.5 P71 BXN71MA4**	495
137.0	17	5.4	9.8	2030	**F102_9.8 SX10 MXN10MA4**	494	**F102_9.8 P71 BXN71MA4**	495
161.0	14	5.8	8.6	1950	**F102_8.6 SX10 MXN10MA4**	494	**F102_8.6 P71 BXN71MA4**	495
181.0	13	6.1	7.4	1860	**F102_7.4 SX10 MXN10MA4**	494	**F102_7.4 P71 BXN71MA4**	495

0.37 kW

n_2 min^{-1}	M_2 Nm	S	i	R_{n2} N	 IE2	IE3		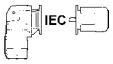 IEC IE2	IE3	
0.6	5137	1.0	2188.0	35000	**F704_2188 S1 ME1SB4**	**F704_2188 S1 MX1SB4**	522	**F704_2188 P71 BE71B4**	**F704_2188 P71 BX71B4**	523
0.7	4742	1.1	2019.0	35000	**F704_2019 S1 ME1SB4**	**F704_2019 S1 MX1SB4**	522	**F704_2019 P71 BE71B4**	**F704_2019 P71 BX71B4**	523
0.7	4666	1.7	1987.0	45000	**F804_1987 S1 ME1SB4**	**F804_1987 S1 MX1SB4**	525	**F804_1987 P71 BE71B4**	**F804_1987 P71 BX71B4**	526
0.8	4307	1.9	1834.0	45000	**F804_1834 S1 ME1SB4**	**F804_1834 S1 MX1SB4**	525	**F804_1834 P71 BE71B4**	**F804_1834 P71 BX71B4**	526
0.8	4031	1.2	1717.0	35000	**F704_1717 S1 ME1SB4**	**F704_1717 S1 MX1SB4**	522	**F704_1717 P71 BE71B4**	**F704_1717 P71 BX71B4**	523
0.8	4013	2.0	1709.0	45000	**F804_1709 S1 ME1SB4**	**F804_1709 S1 MX1SB4**	525	**F804_1709 P71 BE71B4**	**F804_1709 P71 BX71B4**	526
0.9	3721	1.3	1585.0	35000	**F704_1585 S1 ME1SB4**	**F704_1585 S1 MX1SB4**	522	**F704_1585 P71 BE71B4**	**F704_1585 P71 BX71B4**	523
0.9	3705	2.2	1578.0	45000	**F804_1578 S1 ME1SB4**	**F804_1578 S1 MX1SB4**	525	**F804_1578 P71 BE71B4**	**F804_1578 P71 BX71B4**	526
0.9	3479	1.4	1481.0	35000	**F704_1481 S1 ME1SB4**	**F704_1481 S1 MX1SB4**	522	**F704_1481 P71 BE71B4**	**F704_1481 P71 BX71B4**	523
1.0	3250	2.5	1384.0	45000	**F804_1384 S1 ME1SB4**	**F804_1384 S1 MX1SB4**	525	**F804_1384 P71 BE71B4**	**F804_1384 P71 BX71B4**	526
1.0	3211	1.6	1368.0	35000	**F704_1368 S1 ME1SB4**	**F704_1368 S1 MX1SB4**	522	**F704_1368 P71 BE71B4**	**F704_1368 P71 BX71B4**	523
1.1	3000	2.7	1277.0	45000	**F804_1277 S1 ME1SB4**	**F804_1277 S1 MX1SB4**	525	**F804_1277 P71 BE71B4**	**F804_1277 P71 BX71B4**	526
1.2	2680	1.1	1141.0	20000	**F604_1141 S1 ME1SB4**	**F604_1141 S1 MX1SB4**	518	**F604_1141 P71 BE71B4**	**F604_1141 P71 BX71B4**	519
1.2	2775	1.8	1182.0	35000	**F704_1182 S1 ME1SB4**	**F704_1182 S1 MX1SB4**	522	**F704_1182 P71 BE71B4**	**F704_1182 P71 BX71B4**	523
1.2	2692	3.0	1146.0	45000	**F804_1146 S1 ME1SB4**	**F804_1146 S1 MX1SB4**	525	**F804_1146 P71 BE71B4**	**F804_1146 P71 BX71B4**	526
1.3	2474	1.2	1054.0	20000	**F604_1054 S1 ME1SB4**	**F604_1054 S1 MX1SB4**	518	**F604_1054 P71 BE71B4**	**F604_1054 P71 BX71B4**	519
1.3	2562	2.0	1091.0	35000	**F704_1091 S1 ME1SB4**	**F704_1091 S1 MX1SB4**	522	**F704_1091 P71 BE71B4**	**F704_1091 P71 BX71B4**	523
1.3	2485	3.2	1058.0	45000	**F804_1058 S1 ME1SB4**	**F804_1058 S1 MX1SB4**	525	**F804_1058 P71 BE71B4**	**F804_1058 P71 BX71B4**	526
1.4	2252	1.3	958.9	20000	**F604_958.9 S1 ME1SB4**	**F604_958.9 S1 MX1SB4**	518	**F604_958.9 P71 BE71B4**	**F604_958.9 P71 BX71B4**	519
1.4	2288	2.2	974.4	35000	**F704_974.4 S1 ME1SB4**	**F704_974.4 S1 MX1SB4**	522	**F704_974.4 P71 BE71B4**	**F704_974.4 P71 BX71B4**	523
1.5	2079	0.9	885.5	12000	**F514_885.5 S1 ME1SB4**	**F514_885.5 S1 MX1SB4**	514	**F514_885.5 P71 BE71B4**	**F514_885.5 P71 BX71B4**	515
1.5	2078	1.4	885.1	20000	**F604_885.1 S1 ME1SB4**	**F604_885.1 S1 MX1SB4**	518	**F604_885.1 P71 BE71B4**	**F604_885.1 P71 BX71B4**	519
1.5	2112	2.4	899.4	35000	**F704_899.4 S1 ME1SB4**	**F704_899.4 S1 MX1SB4**	522	**F704_899.4 P71 BE71B4**	**F704_899.4 P71 BX71B4**	523
1.7	1941	0.9	826.4	12000	**F514_826.4 S1 ME1SB4**	**F514_826.4 S1 MX1SB4**	514	**F514_826.4 P71 BE71B4**	**F514_826.4 P71 BX71B4**	515
1.7	1931	2.6	822.2	35000	**F704_822.2 S1 ME1SB4**	**F704_822.2 S1 MX1SB4**	522	**F704_822.2 P71 BE71B4**	**F704_822.2 P71 BX71B4**	523
2.0	1588	1.1	676.3	12000	**F514_676.3 S1 ME1SB4**	**F514_676.3 S1 MX1SB4**	514	**F514_676.3 P71 BE71B4**	**F514_676.3 P71 BX71B4**	515
2.1	1556	1.9	662.4	20000	**F604_662.4 S1 ME1SB4**	**F604_662.4 S1 MX1SB4**	518	**F604_662.4 P71 BE71B4**	**F604_662.4 P71 BX71B4**	519
2.1	1544	3.2	657.4	35000	**F704_657.4 S1 ME1SB4**	**F704_657.4 S1 MX1SB4**	522	**F704_657.4 P71 BE71B4**	**F704_657.4 P71 BX71B4**	523
2.2	1436	2.0	611.4	20000	**F604_611.4 S1 ME1SB4**	**F604_611.4 S1 MX1SB4**	518	**F604_611.4 P71 BE71B4**	**F604_611.4 P71 BX71B4**	519
2.3	1425	3.5	606.8	35000	**F704_606.8 S1 ME1SB4**	**F704_606.8 S1 MX1SB4**	522	**F704_606.8 P71 BE71B4**	**F704_606.8 P71 BX71B4**	523
2.5	1291	0.9	549.8	8500	**F414_549.8 S1 ME1SB4**	**F414_549.8 S1 MX1SB4**	510	**F414_549.8 P71 BE71B4**	**F414_549.8 P71 BX71B4**	511
2.6	1246	1.4	530.5	12000	**F514_530.5 S1 ME1SB4**	**F514_530.5 S1 MX1SB4**	514	**F514_530.5 P71 BE71B4**	**F514_530.5 P71 BX71B4**	515
2.6	1246	2.3	530.7	20000	**F604_530.7 S1 ME1SB4**	**F604_530.7 S1 MX1SB4**	518	**F604_530.7 P71 BE71B4**	**F604_530.7 P71 BX71B4**	519
2.8	1150	2.5	489.8	20000	**F604_489.8 S1 ME1SB4**	**F604_489.8 S1 MX1SB4**	518	**F604_489.8 P71 BE71B4**	**F604_489.8 P71 BX71B4**	519
3.2	1018	1.1	433.7	8500	**F414_433.7 S1 ME1SB4**	**F414_433.7 S1 MX1SB4**	510	**F414_433.7 P71 BE71B4**	**F414_433.7 P71 BX71B4**	511
3.2	1008	1.8	429.1	12000	**F514_429.1 S1 ME1SB4**	**F514_429.1 S1 MX1SB4**	514	**F514_429.1 P71 BE71B4**	**F514_429.1 P71 BX71B4**	515
3.2	1016	2.9	432.6	20000	**F604_432.6 S1 ME1SB4**	**F604_432.6 S1 MX1SB4**	518	**F604_432.6 P71 BE71B4**	**F604_432.6 P71 BX71B4**	519

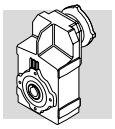

0.37 kW

n_2 min-1	M_2 Nm	S	i	R_{n2} N	IE2	IE3		IEC IE2	IEC IE3	
3.4	938	3.1	399.3	20000	**F604_399.3 S1 ME1SB4**	**F604_399.3 S1 MX1SB4**	518	**F604_399.3 P71 BE71B4**	**F604_399.3 P71 BX71B4**	519
3.9	846	2.1	352.5	12000	**F513_352.5 S1 ME1SB4**	**F513_352.5 S1 MX1SB4**	514	**F513_352.5 P71 BE71B4**	**F513_352.5 P71 BX71B4**	515
4.0	827	1.3	344.8	8500	**F413_344.8 S1 ME1SB4**	**F413_344.8 S1 MX1SB4**	510	**F413_344.8 P71 BE71B4**	**F413_344.8 P71 BX71B4**	511
4.3	761	2.4	317.3	12000	**F513_317.3 S1 ME1SB4**	**F513_317.3 S1 MX1SB4**	514	**F513_317.3 P71 BE71B4**	**F513_317.3 P71 BX71B4**	515
4.6	712	1.5	296.6	8500	**F413_296.6 S1 ME1SB4**	**F413_296.6 S1 MX1SB4**	510	**F413_296.6 P71 BE71B4**	**F413_296.6 P71 BX71B4**	511
4.8	686	2.6	285.9	12000	**F513_285.9 S1 ME1SB4**	**F513_285.9 S1 MX1SB4**	514	**F513_285.9 P71 BE71B4**	**F513_285.9 P71 BX71B4**	515
5.1	641	1.7	266.9	8500	**F413_266.9 S1 ME1SB4**	**F413_266.9 S1 MX1SB4**	510	**F413_266.9 P71 BE71B4**	**F413_266.9 P71 BX71B4**	511
5.2	629	2.9	262.1	12000	**F513_262.1 S1 ME1SB4**	**F513_262.1 S1 MX1SB4**	514	**F513_262.1 P71 BE71B4**	**F513_262.1 P71 BX71B4**	515
5.4	609	1.0	253.6	6500	**F313_253.6 S1 ME1SB4**	**F313_253.6 S1 MX1SB4**	506	**F313_253.6 P71 BE71B4**	**F313_253.6 P71 BX71B4**	507
5.7	576	1.9	240.1	8500	**F413_240.1 S1 ME1SB4**	**F413_240.1 S1 MX1SB4**	510	**F413_240.1 P71 BE71B4**	**F413_240.1 P71 BX71B4**	511
5.7	576	3.1	239.8	12000	**F513_239.8 S1 ME1SB4**	**F513_239.8 S1 MX1SB4**	514	**F513_239.8 P71 BE71B4**	**F513_239.8 P71 BX71B4**	515
6.0	548	1.1	228.2	6500	**F313_228.2 S1 ME1SB4**	**F313_228.2 S1 MX1SB4**	506	**F313_228.2 P71 BE71B4**	**F313_228.2 P71 BX71B4**	507
6.2	528	2.1	220.1	8500	**F413_220.1 S1 ME1SB4**	**F413_220.1 S1 MX1SB4**	510	**F413_220.1 P71 BE71B4**	**F413_220.1 P71 BX71B4**	511
6.3	520	3.5	216.9	12000	**F513_216.9 S1 ME1SB4**	**F513_216.9 S1 MX1SB4**	514	**F513_216.9 P71 BE71B4**	**F513_216.9 P71 BX71B4**	515
6.8	485	1.2	202.3	6500	**F313_202.3 S1 ME1SB4**	**F313_202.3 S1 MX1SB4**	506	**F313_202.3 P71 BE71B4**	**F313_202.3 P71 BX71B4**	507
6.9	477	2.3	198.9	8500	**F413_198.9 S1 ME1SB4**	**F413_198.9 S1 MX1SB4**	510	**F413_198.9 P71 BE71B4**	**F413_198.9 P71 BX71B4**	511
7.4	445	1.3	185.4	6500	**F313_185.4 S1 ME1SB4**	**F313_185.4 S1 MX1SB4**	506	**F313_185.4 P71 BE71B4**	**F313_185.4 P71 BX71B4**	507
7.6	434	2.5	180.7	8500	**F413_180.7 S1 ME1SB4**	**F413_180.7 S1 MX1SB4**	510	**F413_180.7 P71 BE71B4**	**F413_180.7 P71 BX71B4**	511
7.9	418	1.0	174.2	6500	**F253_174.2 S1 ME1SB4**	**F253_174.2 S1 MX1SB4**	502	**F253_174.2 P71 BE71B4**	**F253_174.2 P71 BX71B4**	503
8.1	405	2.7	168.7	8500	**F413_168.7 S1 ME1SB4**	**F413_168.7 S1 MX1SB4**	510	**F413_168.7 P71 BE71B4**	**F413_168.7 P71 BX71B4**	511
8.2	400	1.5	166.8	6500	**F313_166.8 S1 ME1SB4**	**F313_166.8 S1 MX1SB4**	506	**F313_166.8 P71 BE71B4**	**F313_166.8 P71 BX71B4**	507
8.8	374	1.1	155.9	6500	**F253_155.9 S1 ME1SB4**	**F253_155.9 S1 MX1SB4**	502	**F253_155.9 P71 BE71B4**	**F253_155.9 P71 BX71B4**	503
9.1	362	1.7	150.8	6500	**F313_150.8 S1 ME1SB4**	**F313_150.8 S1 MX1SB4**	506	**F313_150.8 P71 BE71B4**	**F313_150.8 P71 BX71B4**	507
9.6	343	1.2	143.0	6500	**F253_143.0 S1 ME1SB4**	**F253_143.0 S1 MX1SB4**	502	**F253_143.0 P71 BE71B4**	**F253_143.0 P71 BX71B4**	503
9.7	338	1.8	140.7	6500	**F313_140.7 S1 ME1SB4**	**F313_140.7 S1 MX1SB4**	506	**F313_140.7 P71 BE71B4**	**F313_140.7 P71 BX71B4**	507
10.2	323	3.4	134.4	8500	**F413_134.4 S1 ME1SB4**	**F413_134.4 S1 MX1SB4**	510	**F413_134.4 P71 BE71B4**	**F413_134.4 P71 BX71B4**	511
10.7	307	1.3	127.8	6500	**F253_127.8 S1 ME1SB4**	**F253_127.8 S1 MX1SB4**	502	**F253_127.8 P71 BE71B4**	**F253_127.8 P71 BX71B4**	503
10.7	308	1.9	128.4	6500	**F313_128.4 S1 ME1SB4**	**F313_128.4 S1 MX1SB4**	506	**F313_128.4 P71 BE71B4**	**F313_128.4 P71 BX71B4**	507
12.1	271	1.5	113.0	6500	**F253_113.0 S1 ME1SB4**	**F253_113.0 S1 MX1SB4**	502	**F253_113.0 P71 BE71B4**	**F253_113.0 P71 BX71B4**	503
12.2	270	2.2	112.5	6500	**F313_112.5 S1 ME1SB4**	**F313_112.5 S1 MX1SB4**	506	**F313_112.5 P71 BE71B4**	**F313_112.5 P71 BX71B4**	507
13.0	253	1.6	105.4	6500	**F253_105.4 S1 ME1SB4**	**F253_105.4 S1 MX1SB4**	502	**F253_105.4 P71 BE71B4**	**F253_105.4 P71 BX71B4**	503
13.4	245	2.5	101.9	6500	**F313_101.9 S1 ME1SB4**	**F313_101.9 S1 MX1SB4**	506	**F313_101.9 P71 BE71B4**	**F313_101.9 P71 BX71B4**	507
13.5	249	1.0	101.6	4000	**F202_101.6 S1 ME1SB4**	**F202_101.6 S1 MX1SB4**	498	**F202_101.6 P71 BE71B4**	**F202_101.6 P71 BX71B4**	499
14.3	229	1.7	95.5	6490	**F253_95.5 S1 ME1SB4**	**F253_95.5 S1 MX1SB4**	502	**F253_95.5 P71 BE71B4**	**F253_95.5 P71 BX71B4**	503
15.2	222	1.1	90.4	4000	**F202_90.4 S1 ME1SB4**	**F202_90.4 S1 MX1SB4**	498	**F202_90.4 P71 BE71B4**	**F202_90.4 P71 BX71B4**	499
15.7	210	2.9	87.4	6500	**F313_87.4 S1 ME1SB4**	**F313_87.4 S1 MX1SB4**	506	**F313_87.4 P71 BE71B4**	**F313_87.4 P71 BX71B4**	507
16.4	200	2.0	83.4	6280	**F253_83.4 S1 ME1SB4**	**F253_83.4 S1 MX1SB4**	502	**F253_83.4 P71 BE71B4**	**F253_83.4 P71 BX71B4**	503
17.4	189	3.2	78.9	6500	**F313_78.9 S1 ME1SB4**	**F313_78.9 S1 MX1SB4**	506	**F313_78.9 P71 BE71B4**	**F313_78.9 P71 BX71B4**	507
17.8	188	1.3	76.8	4000	**F202_76.8 S1 ME1SB4**	**F202_76.8 S1 MX1SB4**	498	**F202_76.8 P71 BE71B4**	**F202_76.8 P71 BX71B4**	499
17.9	184	2.2	76.6	6160	**F253_76.6 S1 ME1SB4**	**F253_76.6 S1 MX1SB4**	502	**F253_76.6 P71 BE71B4**	**F253_76.6 P71 BX71B4**	503
19.8	169	1.5	69.1	4000	**F202_69.1 S1 ME1SB4**	**F202_69.1 S1 MX1SB4**	498	**F202_69.1 P71 BE71B4**	**F202_69.1 P71 BX71B4**	499
21.0	157	2.6	65.3	5920	**F253_65.3 S1 ME1SB4**	**F253_65.3 S1 MX1SB4**	502	**F253_65.3 P71 BE71B4**	**F253_65.3 P71 BX71B4**	503
21.7	154	0.9	63.0	2800	**F102_63.0 S1 ME1SB4**	**F102_63.0 S1 MX1SB4**	494	**F102_63.0 P71 BE71B4**	**F102_63.0 P71 BX71B4**	495
22.1	152	1.6	61.9	4000	**F202_61.9 S1 ME1SB4**	**F202_61.9 S1 MX1SB4**	498	**F202_61.9 P71 BE71B4**	**F202_61.9 P71 BX71B4**	499
23.5	140	2.9	58.3	5750	**F253_58.3 S1 ME1SB4**	**F253_58.3 S1 MX1SB4**	502	**F253_58.3 P71 BE71B4**	**F253_58.3 P71 BX71B4**	503
24.2	139	1.0	56.7	2800	**F102_56.7 S1 ME1SB4**	**F102_56.7 S1 MX1SB4**	494	**F102_56.7 P71 BE71B4**	**F102_56.7 P71 BX71B4**	495
24.2	139	1.8	56.7	4000	**F202_56.7 S1 ME1SB4**	**F202_56.7 S1 MX1SB4**	498	**F202_56.7 P71 BE71B4**	**F202_56.7 P71 BX71B4**	499
27.0	124	2.0	50.7	3900	**F202_50.7 S1 ME1SB4**	**F202_50.7 S1 MX1SB4**	498	**F202_50.7 P71 BE71B4**	**F202_50.7 P71 BX71B4**	499
27.0	122	3.3	50.8	5540	**F253_50.8 S1 ME1SB4**	**F253_50.8 S1 MX1SB4**	502	**F253_50.8 P71 BE71B4**	**F253_50.8 P71 BX71B4**	503
28.1	119	1.2	48.7	2800	**F102_48.7 S1 ME1SB4**	**F102_48.7 S1 MX1SB4**	494	**F102_48.7 P71 BE71B4**	**F102_48.7 P71 BX71B4**	495
31.0	110	1.3	44.7	2800	**F102_44.7 S1 ME1SB4**	**F102_44.7 S1 MX1SB4**	494	**F102_44.7 P71 BE71B4**	**F102_44.7 P71 BX71B4**	495
31.0	110	2.3	44.8	3770	**F202_44.8 S1 ME1SB4**	**F202_44.8 S1 MX1SB4**	498	**F202_44.8 P71 BE71B4**	**F202_44.8 P71 BX71B4**	499
31.0	109	3.5	44.4	5370	**F252_44.4 S1 ME1SB4**	**F252_44.4 S1 MX1SB4**	502	**F252_44.4 P71 BE71B4**	**F252_44.4 P71 BX71B4**	503
33.0	103	2.4	41.8	3700	**F202_41.8 S1 ME1SB4**	**F202_41.8 S1 MX1SB4**	498	**F202_41.8 P71 BE71B4**	**F202_41.8 P71 BX71B4**	499
35.0	97	1.4	39.6	2800	**F102_39.6 S1 ME1SB4**	**F102_39.6 S1 MX1SB4**	494	**F102_39.6 P71 BE71B4**	**F102_39.6 P71 BX71B4**	495
36.0	93	2.7	37.9	3600	**F202_37.9 S1 ME1SB4**	**F202_37.9 S1 MX1SB4**	498	**F202_37.9 P71 BE71B4**	**F202_37.9 P71 BX71B4**	499
39.0	87	1.6	35.3	2800	**F102_35.3 S1 ME1SB4**	**F102_35.3 S1 MX1SB4**	494	**F102_35.3 P71 BE71B4**	**F102_35.3 P71 BX71B4**	495

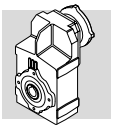

0.37 kW

n_2 min-1	M_2 Nm	S	i	R_{n2} N	IE2	IE3		IE2	IEC IE3	
41.0	81	3.1	33.1	3460	**F202_33.1 S1 ME1SB4**	**F202_33.1 S1 MX1SB4**	498	**F202_33.1 P71 BE71B4**	**F202_33.1 P71 BX71B4**	499
42.0	81	1.7	33.0	2800	**F102_33.0 S1 ME1SB4**	**F102_33.0 S1 MX1SB4**	494	**F102_33.0 P71 BE71B4**	**F102_33.0 P71 BX71B4**	495
45.0	75	3.4	30.4	3380	**F202_30.4 S1 ME1SB4**	**F202_30.4 S1 MX1SB4**	498	**F202_30.4 P71 BE71B4**	**F202_30.4 P71 BX71B4**	499
46.0	73	1.9	29.6	2800	**F102_29.6 S1 ME1SB4**	**F102_29.6 S1 MX1SB4**	494	**F102_29.6 P71 BE71B4**	**F102_29.6 P71 BX71B4**	495
53.0	63	2.2	25.8	2690	**F102_25.8 S1 ME1SB4**	**F102_25.8 S1 MX1SB4**	494	**F102_25.8 P71 BE71B4**	**F102_25.8 P71 BX71B4**	495
60.0	56	2.5	22.8	2600	**F102_22.8 S1 ME1SB4**	**F102_22.8 S1 MX1SB4**	494	**F102_22.8 P71 BE71B4**	**F102_22.8 P71 BX71B4**	495
71.0	47	2.9	19.3	2470	**F102_19.3 S1 ME1SB4**	**F102_19.3 S1 MX1SB4**	494	**F102_19.3 P71 BE71B4**	**F102_19.3 P71 BX71B4**	495
81.0	42	3.1	17.0	2380	**F102_17.0 S1 ME1SB4**	**F102_17.0 S1 MX1SB4**	494	**F102_17.0 P71 BE71B4**	**F102_17.0 P71 BX71B4**	495
94.0	36	3.3	14.6	2280	**F102_14.6 S1 ME1SB4**	**F102_14.6 S1 MX1SB4**	494	**F102_14.6 P71 BE71B4**	**F102_14.6 P71 BX71B4**	495
105.0	32	3.3	13.0	2200	**F102_13.0 S1 ME1SB4**	**F102_13.0 S1 MX1SB4**	494	**F102_13.0 P71 BE71B4**	**F102_13.0 P71 BX71B4**	495
119.0	28	3.4	11.5	2120	**F102_11.5 S1 ME1SB4**	**F102_11.5 S1 MX1SB4**	494	**F102_11.5 P71 BE71B4**	**F102_11.5 P71 BX71B4**	495
140.0	24	3.7	9.8	2010	**F102_9.8 S1 ME1SB4**	**F102_9.8 S1 MX1SB4**	494	**F102_9.8 P71 BE71B4**	**F102_9.8 P71 BX71B4**	495
160.0	21	3.9	8.6	1930	**F102_8.6 S1 ME1SB4**	**F102_8.6 S1 MX1SB4**	494	**F102_8.6 P71 BE71B4**	**F102_8.6 P71 BX71B4**	495
185.0	18	4.2	7.4	1850	**F102_7.4 S1 ME1SB4**	**F102_7.4 S1 MX1SB4**	494	**F102_7.4 P71 BE71B4**	**F102_7.4 P71 BX71B4**	495

0.37 kW

n_2 min-1	M_2 Nm	S	i	R_{n2} N	IE3		IEC IE3	
0.6	5137	1.0	2188.0	35000			**F704_2188 P71 BXN71MB4**	523
0.7	4742	1.1	2019.0	35000			**F704_2019 P71 BXN71MB4**	523
0.7	4666	1.7	1987.0	45000			**F804_1987 P71 BXN71MB4**	526
0.8	4307	1.9	1834.0	45000			**F804_1834 P71 BXN71MB4**	526
0.8	4031	1.2	1717.0	35000			**F704_1717 P71 BXN71MB4**	523
0.8	4013	2.0	1709.0	45000			**F804_1709 P71 BXN71MB4**	526
0.9	3721	1.3	1585.0	35000			**F704_1585 P71 BXN71MB4**	523
0.9	3705	2.2	1578.0	45000			**F804_1578 P71 BXN71MB4**	526
0.9	3479	1.4	1481.0	35000			**F704_1481 P71 BXN71MB4**	523
1.0	3250	2.5	1384.0	45000			**F804_1384 P71 BXN71MB4**	526
1.0	3211	1.6	1368.0	35000			**F704_1368 P71 BXN71MB4**	523
1.1	3000	2.7	1277.0	45000			**F804_1277 P71 BXN71MB4**	526
1.2	2680	1.1	1141.0	20000			**F604_1141 P71 BXN71MB4**	519
1.2	2775	1.8	1182.0	35000			**F704_1182 P71 BXN71MB4**	523
1.2	2692	3.0	1146.0	45000			**F804_1146 P71 BXN71MB4**	526
1.3	2474	1.2	1054.0	20000			**F604_1054 P71 BXN71MB4**	519
1.3	2562	2.0	1091.0	35000			**F704_1091 P71 BXN71MB4**	523
1.3	2485	3.2	1058.0	45000			**F804_1058 P71 BXN71MB4**	526
1.4	2252	1.3	958.9	20000			**F604_958.9 P71 BXN71MB4**	519
1.4	2288	2.2	974.4	35000			**F704_974.4 P71 BXN71MB4**	523
1.5	2079	0.9	885.5	12000	**F514_885.5 SX10 MXN10MB4**	514	**F514_885.5 P71 BXN71MB4**	515
1.5	2078	1.4	885.1	20000			**F604_885.1 P71 BXN71MB4**	519
1.5	2112	2.4	899.4	35000			**F704_899.4 P71 BXN71MB4**	523
1.7	1941	0.9	826.4	12000	**F514_826.4 SX10 MXN10MB4**	514	**F514_826.4 P71 BXN71MB4**	515
1.7	1931	2.6	822.2	35000			**F704_822.2 P71 BXN71MB4**	523
2.0	1588	1.1	676.3	12000	**F514_676.3 SX10 MXN10MB4**	514	**F514_676.3 P71 BXN71MB4**	515
2.1	1556	1.9	662.4	20000			**F604_662.4 P71 BXN71MB4**	519
2.1	1544	3.2	657.4	35000			**F704_657.4 P71 BXN71MB4**	523
2.2	1436	2.0	611.4	20000			**F604_611.4 P71 BXN71MB4**	519
2.3	1425	3.5	606.8	35000			**F704_606.8 P71 BXN71MB4**	523
2.5	1291	0.9	549.8	8500	**F414_549.8 SX10 MXN10MB4**	510	**F414_549.8 P71 BXN71MB4**	511
2.6	1246	1.4	530.5	12000	**F514_530.5 SX10 MXN10MB4**	514	**F514_530.5 P71 BXN71MB4**	515
2.6	1246	2.3	530.7	20000			**F604_530.7 P71 BXN71MB4**	519
2.8	1150	2.5	489.8	20000			**F604_489.8 P71 BXN71MB4**	519
3.2	1018	1.1	433.7	8500	**F414_433.7 SX10 MXN10MB4**	510	**F414_433.7 P71 BXN71MB4**	511
3.2	1008	1.8	429.1	12000	**F514_429.1 SX10 MXN10MB4**	514	**F514_429.1 P71 BXN71MB4**	515

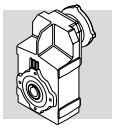

0.37 kW

n_2 min^{-1}	M_2 Nm	S	i	R_{n2} N	IE3		IEC IE3	
3.2	1016	2.9	432.6	20000			**F604_432.6 P71 BXN71MB4**	519
3.4	938	3.1	399.3	20000			**F604_399.3 P71 BXN71MB4**	519
3.9	846	2.1	352.5	12000			**F513_352.5 P71 BXN71MB4**	515
4.0	827	1.3	344.8	8500			**F413_344.8 P71 BXN71MB4**	511
4.3	761	2.4	317.3	12000			**F513_317.3 P71 BXN71MB4**	515
4.6	712	1.5	296.6	8500			**F413_296.6 P71 BXN71MB4**	511
4.8	686	2.6	285.9	12000			**F513_285.9 P71 BXN71MB4**	515
5.1	641	1.7	266.9	8500			**F413_266.9 P71 BXN71MB4**	511
5.2	629	2.9	262.1	12000			**F513_262.1 P71 BXN71MB4**	515
5.4	609	1.0	253.6	6500	**F313_253.6 SX10 MXN10MB4**	506	**F313_253.6 P71 BXN71MB4**	507
5.7	576	1.9	240.1	8500			**F413_240.1 P71 BXN71MB4**	511
5.7	576	3.1	239.8	12000			**F513_239.8 P71 BXN71MB4**	515
6.0	548	1.1	228.2	6500	**F313_228.2 SX10 MXN10MB4**	506	**F313_228.2 P71 BXN71MB4**	507
6.2	528	2.1	220.1	8500			**F413_220.1 P71 BXN71MB4**	511
6.3	520	3.5	216.9	12000			**F513_216.9 P71 BXN71MB4**	515
6.8	485	1.2	202.3	6500	**F313_202.3 SX10 MXN10MB4**	506	**F313_202.3 P71 BXN71MB4**	507
6.9	477	2.3	198.9	8500			**F413_198.9 P71 BXN71MB4**	511
7.4	445	1.3	185.4	6500	**F313_185.4 SX10 MXN10MB4**	506	**F313_185.4 P71 BXN71MB4**	507
7.6	434	2.5	180.7	8500			**F413_180.7 P71 BXN71MB4**	511
7.9	418	1.0	174.2	6500	**F253_174.2 SX10 MXN10MB4**	502	**F253_174.2 P71 BXN71MB4**	503
8.1	405	2.7	168.7	8500			**F413_168.7 P71 BXN71MB4**	511
8.2	400	1.5	166.8	6500	**F313_166.8 SX10 MXN10MB4**	506	**F313_166.8 P71 BXN71MB4**	507
8.8	374	1.1	155.9	6500	**F253_155.9 SX10 MXN10MB4**	502	**F253_155.9 P71 BXN71MB4**	503
9.1	362	1.7	150.8	6500	**F313_150.8 SX10 MXN10MB4**	506	**F313_150.8 P71 BXN71MB4**	507
9.6	343	1.2	143.0	6500	**F253_143.0 SX10 MXN10MB4**	502	**F253_143.0 P71 BXN71MB4**	503
9.7	338	1.8	140.7	6500	**F313_140.7 SX10 MXN10MB4**	506	**F313_140.7 P71 BXN71MB4**	507
10.2	323	3.4	134.4	8500			**F413_134.4 P71 BXN71MB4**	511
10.7	307	1.3	127.8	6500	**F253_127.8 SX10 MXN10MB4**	502	**F253_127.8 P71 BXN71MB4**	503
10.7	308	1.9	128.4	6500	**F313_128.4 SX10 MXN10MB4**	506	**F313_128.4 P71 BXN71MB4**	507
12.1	271	1.5	113.0	6500	**F253_113.0 SX10 MXN10MB4**	502	**F253_113.0 P71 BXN71MB4**	503
12.2	270	2.2	112.5	6500	**F313_112.5 SX10 MXN10MB4**	506	**F313_112.5 P71 BXN71MB4**	507
13.0	253	1.6	105.4	6500	**F253_105.4 SX10 MXN10MB4**	502	**F253_105.4 P71 BXN71MB4**	503
13.4	245	2.5	101.9	6500	**F313_101.9 SX10 MXN10MB4**	506	**F313_101.9 P71 BXN71MB4**	507
13.5	249	1.0	101.6	4000	**F202_101.6 SX10 MXN10MB4**	498	**F202_101.6 P71 BXN71MB4**	499
14.3	229	1.7	95.5	6490	**F253_95.5 SX10 MXN10MB4**	502	**F253_95.5 P71 BXN71MB4**	503
15.2	222	1.1	90.4	4000	**F202_90.4 SX10 MXN10MB4**	498	**F202_90.4 P71 BXN71MB4**	499
15.7	210	2.9	87.4	6500	**F313_87.4 SX10 MXN10MB4**	506	**F313_87.4 P71 BXN71MB4**	507
16.4	200	2.0	83.4	6280	**F253_83.4 SX10 MXN10MB4**	502	**F253_83.4 P71 BXN71MB4**	503
17.4	189	3.2	78.9	6500	**F313_78.9 SX10 MXN10MB4**	506	**F313_78.9 P71 BXN71MB4**	507
17.8	188	1.3	76.8	4000	**F202_76.8 SX10 MXN10MB4**	498	**F202_76.8 P71 BXN71MB4**	499
17.9	184	2.2	76.6	6160	**F253_76.6 SX10 MXN10MB4**	502	**F253_76.6 P71 BXN71MB4**	503
19.8	169	1.5	69.1	4000	**F202_69.1 SX10 MXN10MB4**	498	**F202_69.1 P71 BXN71MB4**	499
21.0	157	2.6	65.3	5920	**F253_65.3 SX10 MXN10MB4**	502	**F253_65.3 P71 BXN71MB4**	503
21.7	154	0.9	63.0	2800	**F102_63.0 SX10 MXN10MB4**	494	**F102_63.0 P71 BXN71MB4**	495
22.1	152	1.6	61.9	4000	**F202_61.9 SX10 MXN10MB4**	498	**F202_61.9 P71 BXN71MB4**	499
23.5	140	2.9	58.3	5750	**F253_58.3 SX10 MXN10MB4**	502	**F253_58.3 P71 BXN71MB4**	503
24.2	139	1.0	56.7	2800	**F102_56.7 SX10 MXN10MB4**	494	**F102_56.7 P71 BXN71MB4**	495
24.2	139	1.8	56.7	4000	**F202_56.7 SX10 MXN10MB4**	498	**F202_56.7 P71 BXN71MB4**	499
27.0	124	2.0	50.7	3900	**F202_50.7 SX10 MXN10MB4**	498	**F202_50.7 P71 BXN71MB4**	499
27.0	122	3.3	50.8	5540	**F253_50.8 SX10 MXN10MB4**	502	**F253_50.8 P71 BXN71MB4**	503
28.1	119	1.2	48.7	2800	**F102_48.7 SX10 MXN10MB4**	494	**F102_48.7 P71 BXN71MB4**	495
31.0	110	1.3	44.7	2800	**F102_44.7 SX10 MXN10MB4**	494	**F102_44.7 P71 BXN71MB4**	495
31.0	110	2.3	44.8	3770	**F202_44.8 SX10 MXN10MB4**	498	**F202_44.8 P71 BXN71MB4**	499
31.0	109	3.5	44.4	5370	**F252_44.4 SX10 MXN10MB4**	502	**F252_44.4 P71 BXN71MB4**	503
33.0	103	2.4	41.8	3700	**F202_41.8 SX10 MXN10MB4**	498	**F202_41.8 P71 BXN71MB4**	499
35.0	97	1.4	39.6	2800	**F102_39.6 SX10 MXN10MB4**	494	**F102_39.6 P71 BXN71MB4**	495
36.0	93	2.7	37.9	3600	**F202_37.9 SX10 MXN10MB4**	498	**F202_37.9 P71 BXN71MB4**	499

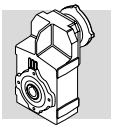

0.37 kW

n_2 min-1	M_2 Nm	S	i	R_{n2} N	IE3		IEC IE3	
39.0	87	1.6	35.3	2800	**F102_35.3 SX10 MXN10MB4**	494	**F102_35.3 P71 BXN71MB4**	495
41.0	81	3.1	33.1	3460	**F202_33.1 SX10 MXN10MB4**	498	**F202_33.1 P71 BXN71MB4**	499
42.0	81	1.7	33.0	2800	**F102_33.0 SX10 MXN10MB4**	494	**F102_33.0 P71 BXN71MB4**	495
45.0	75	3.4	30.4	3380	**F202_30.4 SX10 MXN10MB4**	498	**F202_30.4 P71 BXN71MB4**	499
46.0	73	1.9	29.6	2800	**F102_29.6 SX10 MXN10MB4**	494	**F102_29.6 P71 BXN71MB4**	495
53.0	63	2.2	25.8	2690	**F102_25.8 SX10 MXN10MB4**	494	**F102_25.8 P71 BXN71MB4**	495
60.0	56	2.5	22.8	2600	**F102_22.8 SX10 MXN10MB4**	494	**F102_22.8 P71 BXN71MB4**	495
71.0	47	2.9	19.3	2470	**F102_19.3 SX10 MXN10MB4**	494	**F102_19.3 P71 BXN71MB4**	495
81.0	42	3.1	17.0	2380	**F102_17.0 SX10 MXN10MB4**	494	**F102_17.0 P71 BXN71MB4**	495
94.0	36	3.3	14.6	2280	**F102_14.6 SX10 MXN10MB4**	494	**F102_14.6 P71 BXN71MB4**	495
105.0	32	3.3	13.0	2200	**F102_13.0 SX10 MXN10MB4**	494	**F102_13.0 P71 BXN71MB4**	495
119.0	28	3.4	11.5	2120	**F102_11.5 SX10 MXN10MB4**	494	**F102_11.5 P71 BXN71MB4**	495
140.0	24	3.7	9.8	2010	**F102_9.8 SX10 MXN10MB4**	494	**F102_9.8 P71 BXN71MB4**	495
160.0	21	3.9	8.6	1930	**F102_8.6 SX10 MXN10MB4**	494	**F102_8.6 P71 BXN71MB4**	495
185.0	18	4.2	7.4	1850	**F102_7.4 SX10 MXN10MB4**	494	**F102_7.4 P71 BXN71MB4**	495

0.55 kW

n_2 min-1	M_2 Nm	S	i	R_{n2} N	IE2	IE3		IEC IE2	IE3	
0.7	6885	1.2	1987.0	45000	**F804_1987 S2 ME2SA4**	**F804_1987 S2 MX2SA4**	525	**F804_1987 P80 BE80A4**	**F804_1987 P80 BX80A4**	526
0.8	6356	1.3	1834.0	45000	**F804_1834 S2 ME2SA4**	**F804_1834 S2 MX2SA4**	525	**F804_1834 P80 BE80A4**	**F804_1834 P80 BX80A4**	526
0.8	5923	1.4	1709.0	45000	**F804_1709 S2 ME2SA4**	**F804_1709 S2 MX2SA4**	525	**F804_1709 P80 BE80A4**	**F804_1709 P80 BX80A4**	526
0.9	5491	0.9	1585.0	35000	**F704_1585 S2 ME2SA4**	**F704_1585 S2 MX2SA4**	522	**F704_1585 P80 BE80A4**	**F704_1585 P80 BX80A4**	523
0.9	5467	1.5	1578.0	45000	**F804_1578 S2 ME2SA4**	**F804_1578 S2 MX2SA4**	525	**F804_1578 P80 BE80A4**	**F804_1578 P80 BX80A4**	526
0.9	5134	1.0	1481.0	35000	**F704_1481 S2 ME2SA4**	**F704_1481 S2 MX2SA4**	522	**F704_1481 P80 BE80A4**	**F704_1481 P80 BX80A4**	523
1.0	4739	1.1	1368.0	35000	**F704_1368 S2 ME2SA4**	**F704_1368 S2 MX2SA4**	522	**F704_1368 P80 BE80A4**	**F704_1368 P80 BX80A4**	523
1.0	4795	1.7	1384.0	45000	**F804_1384 S2 ME2SA4**	**F804_1384 S2 MX2SA4**	525	**F804_1384 P80 BE80A4**	**F804_1384 P80 BX80A4**	526
1.1	4427	1.8	1277.0	45000	**F804_1277 S2 ME2SA4**	**F804_1277 S2 MX2SA4**	525	**F804_1277 P80 BE80A4**	**F804_1277 P80 BX80A4**	526
1.2	4095	1.2	1182.0	35000	**F704_1182 S2 ME2SA4**	**F704_1182 S2 MX2SA4**	522	**F704_1182 P80 BE80A4**	**F704_1182 P80 BX80A4**	523
1.2	3972	2.0	1146.0	45000	**F804_1146 S2 ME2SA4**	**F804_1146 S2 MX2SA4**	525	**F804_1146 P80 BE80A4**	**F804_1146 P80 BX80A4**	526
1.3	3780	1.3	1091.0	35000	**F704_1091 S2 ME2SA4**	**F704_1091 S2 MX2SA4**	522	**F704_1091 P80 BE80A4**	**F704_1091 P80 BX80A4**	523
1.3	3667	2.2	1058.0	45000	**F804_1058 S2 ME2SA4**	**F804_1058 S2 MX2SA4**	525	**F804_1058 P80 BE80A4**	**F804_1058 P80 BX80A4**	526
1.4	3323	0.9	958.9	20000	**F604_958.9 S2 ME2SA4**	**F604_958.9 S2 MX2SA4**	518	**F604_958.9 P80 BE80A4**	**F604_958.9 P80 BX80A4**	519
1.4	3377	1.5	974.4	35000	**F704_974.4 S2 ME2SA4**	**F704_974.4 S2 MX2SA4**	522	**F704_974.4 P80 BE80A4**	**F704_974.4 P80 BX80A4**	523
1.5	3117	1.6	899.4	35000	**F704_899.4 S2 ME2SA4**	**F704_899.4 S2 MX2SA4**	522	**F704_899.4 P80 BE80A4**	**F704_899.4 P80 BX80A4**	523
1.5	3109	2.6	897.3	45000	**F804_897.3 S2 ME2SA4**	**F804_897.3 S2 MX2SA4**	525	**F804_897.3 P80 BE80A4**	**F804_897.3 P80 BX80A4**	526
1.6	3067	0.9	885.1	20000	**F604_885.1 S2 ME2SA4**	**F604_885.1 S2 MX2SA4**	518	**F604_885.1 P80 BE80A4**	**F604_885.1 P80 BX80A4**	519
1.7	2849	1.8	822.2	35000	**F704_822.2 S2 ME2SA4**	**F704_822.2 S2 MX2SA4**	522	**F704_822.2 P80 BE80A4**	**F704_822.2 P80 BX80A4**	523
1.8	2684	3.0	774.4	45000	**F804_774.4 S2 ME2SA4**	**F804_774.4 S2 MX2SA4**	525	**F804_774.4 P80 BE80A4**	**F804_774.4 P80 BX80A4**	526
1.9	2477	3.2	714.9	45000	**F804_714.9 S2 ME2SA4**	**F804_714.9 S2 MX2SA4**	525	**F804_714.9 P80 BE80A4**	**F804_714.9 P80 BX80A4**	526
2.1	2295	1.3	662.4	20000	**F604_662.4 S2 ME2SA4**	**F604_662.4 S2 MX2SA4**	518	**F604_662.4 P80 BE80A4**	**F604_662.4 P80 BX80A4**	519
2.1	2278	2.2	657.4	35000	**F704_657.4 S2 ME2SA4**	**F704_657.4 S2 MX2SA4**	522	**F704_657.4 P80 BE80A4**	**F704_657.4 P80 BX80A4**	523
2.3	2119	1.4	611.4	20000	**F604_611.4 S2 ME2SA4**	**F604_611.4 S2 MX2SA4**	518	**F604_611.4 P80 BE80A4**	**F604_611.4 P80 BX80A4**	519
2.3	2103	2.4	606.8	35000	**F704_606.8 S2 ME2SA4**	**F704_606.8 S2 MX2SA4**	522	**F704_606.8 P80 BE80A4**	**F704_606.8 P80 BX80A4**	523
2.6	1838	1.0	530.5	12000	**F514_530.5 S2 ME2SA4**	**F514_530.5 S2 MX2SA4**	514	**F514_530.5 P80 BE80A4**	**F514_530.5 P80 BX80A4**	515
2.6	1839	1.6	530.7	20000	**F604_530.7 S2 ME2SA4**	**F604_530.7 S2 MX2SA4**	518	**F604_530.7 P80 BE80A4**	**F604_530.7 P80 BX80A4**	519
2.7	1769	2.8	510.4	35000	**F704_510.4 S2 ME2SA4**	**F704_510.4 S2 MX2SA4**	522	**F704_510.4 P80 BE80A4**	**F704_510.4 P80 BX80A4**	523
2.8	1698	1.7	489.8	20000	**F604_489.8 S2 ME2SA4**	**F604_489.8 S2 MX2SA4**	518	**F604_489.8 P80 BE80A4**	**F604_489.8 P80 BX80A4**	519
2.9	1633	3.1	471.2	35000	**F704_471.2 S2 ME2SA4**	**F704_471.2 S2 MX2SA4**	522	**F704_471.2 P80 BE80A4**	**F704_471.2 P80 BX80A4**	523
3.2	1487	1.2	429.1	12000	**F514_429.1 S2 ME2SA4**	**F514_429.1 S2 MX2SA4**	514	**F514_429.1 P80 BE80A4**	**F514_429.1 P80 BX80A4**	515
3.2	1499	1.9	432.6	20000	**F604_432.6 S2 ME2SA4**	**F604_432.6 S2 MX2SA4**	518	**F604_432.6 P80 BE80A4**	**F604_432.6 P80 BX80A4**	519
3.5	1384	2.1	399.3	20000	**F604_399.3 S2 ME2SA4**	**F604_399.3 S2 MX2SA4**	518	**F604_399.3 P80 BE80A4**	**F604_399.3 P80 BX80A4**	519
3.9	1248	1.4	352.5	12000	**F513_352.5 S2 ME2SA4**	**F513_352.5 S2 MX2SA4**	514	**F513_352.5 P80 BE80A4**	**F513_352.5 P80 BX80A4**	515
4.0	1221	0.9	344.8	8500	**F413_344.8 S2 ME2SA4**	**F413_344.8 S2 MX2SA4**	510	**F413_344.8 P80 BE80A4**	**F413_344.8 P80 BX80A4**	511

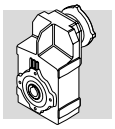

0.55 kW

n_2 min-1	M_2 Nm	S	i	R_{n2} N	IE2	IE3		IEC IE2	IEC IE3	
4.0	1184	2.4	341.7	20000	**F604_341.7 S2 ME2SA4**	**F604_341.7 S2 MX2SA4**	518	**F604_341.7 P80 BE80A4**	**F604_341.7 P80 BX80A4**	519
4.3	1124	1.6	317.3	12000	**F513_317.3 S2 ME2SA4**	**F513_317.3 S2 MX2SA4**	514	**F513_317.3 P80 BE80A4**	**F513_317.3 P80 BX80A4**	515
4.4	1093	2.7	315.4	20000	**F604_315.4 S2 ME2SA4**	**F604_315.4 S2 MX2SA4**	518	**F604_315.4 P80 BE80A4**	**F604_315.4 P80 BX80A4**	519
4.7	1050	1.0	296.6	8500	**F413_296.6 S2 ME2SA4**	**F413_296.6 S2 MX2SA4**	510	**F413_296.6 P80 BE80A4**	**F413_296.6 P80 BX80A4**	511
4.8	1013	1.8	285.9	12000	**F513_285.9 S2 ME2SA4**	**F513_285.9 S2 MX2SA4**	514	**F513_285.9 P80 BE80A4**	**F513_285.9 P80 BX80A4**	515
5.2	945	1.2	266.9	8500	**F413_266.9 S2 ME2SA4**	**F413_266.9 S2 MX2SA4**	510	**F413_266.9 P80 BE80A4**	**F413_266.9 P80 BX80A4**	511
5.3	928	1.9	262.1	12000	**F513_262.1 S2 ME2SA4**	**F513_262.1 S2 MX2SA4**	514	**F513_262.1 P80 BE80A4**	**F513_262.1 P80 BX80A4**	515
5.7	850	1.3	240.1	8500	**F413_240.1 S2 ME2SA4**	**F413_240.1 S2 MX2SA4**	510	**F413_240.1 P80 BE80A4**	**F413_240.1 P80 BX80A4**	511
5.8	849	2.1	239.8	12000	**F513_239.8 S2 ME2SA4**	**F513_239.8 S2 MX2SA4**	514	**F513_239.8 P80 BE80A4**	**F513_239.8 P80 BX80A4**	515
6.3	780	1.4	220.1	8500	**F413_220.1 S2 ME2SA4**	**F413_220.1 S2 MX2SA4**	510	**F413_220.1 P80 BE80A4**	**F413_220.1 P80 BX80A4**	511
6.4	768	2.3	216.9	12000	**F513_216.9 S2 ME2SA4**	**F513_216.9 S2 MX2SA4**	514	**F513_216.9 P80 BE80A4**	**F513_216.9 P80 BX80A4**	515
6.8	717	2.5	202.4	12000	**F513_202.4 S2 ME2SA4**	**F513_202.4 S2 MX2SA4**	514	**F513_202.4 P80 BE80A4**	**F513_202.4 P80 BX80A4**	515
6.9	704	1.6	198.9	8500	**F413_198.9 S2 ME2SA4**	**F413_198.9 S2 MX2SA4**	510	**F413_198.9 P80 BE80A4**	**F413_198.9 P80 BX80A4**	511
7.4	657	0.9	185.4	6500	**F313_185.4 S2 ME2SA4**	**F313_185.4 S2 MX2SA4**	506	**F313_185.4 P80 BE80A4**	**F313_185.4 P80 BX80A4**	507
7.6	640	1.7	180.7	8500	**F413_180.7 S2 ME2SA4**	**F413_180.7 S2 MX2SA4**	510	**F413_180.7 P80 BE80A4**	**F413_180.7 P80 BX80A4**	511
8.2	597	1.8	168.7	8500	**F413_168.7 S2 ME2SA4**	**F413_168.7 S2 MX2SA4**	510	**F413_168.7 P80 BE80A4**	**F413_168.7 P80 BX80A4**	511
8.3	591	1.0	166.8	6500	**F313_166.8 S2 ME2SA4**	**F313_166.8 S2 MX2SA4**	506	**F313_166.8 P80 BE80A4**	**F313_166.8 P80 BX80A4**	507
8.3	587	3.1	165.6	12000	**F513_165.6 S2 ME2SA4**	**F513_165.6 S2 MX2SA4**	514	**F513_165.6 P80 BE80A4**	**F513_165.6 P80 BX80A4**	515
9.2	534	1.1	150.8	6500	**F313_150.8 S2 ME2SA4**	**F313_150.8 S2 MX2SA4**	506	**F313_150.8 P80 BE80A4**	**F313_150.8 P80 BX80A4**	507
9.8	498	1.2	140.7	6500	**F313_140.7 S2 ME2SA4**	**F313_140.7 S2 MX2SA4**	506	**F313_140.7 P80 BE80A4**	**F313_140.7 P80 BX80A4**	507
10.3	476	2.3	134.4	8500	**F413_134.4 S2 ME2SA4**	**F413_134.4 S2 MX2SA4**	510	**F413_134.4 P80 BE80A4**	**F413_134.4 P80 BX80A4**	511
10.7	455	1.3	128.4	6500	**F313_128.4 S2 ME2SA4**	**F313_128.4 S2 MX2SA4**	506	**F313_128.4 P80 BE80A4**	**F313_128.4 P80 BX80A4**	507
12.2	400	1.0	113.0	6130	**F253_113.0 S2 ME2SA4**	**F253_113.0 S2 MX2SA4**	502	**F253_113.0 P80 BE80A4**	**F253_113.0 P80 BX80A4**	503
12.3	399	1.5	112.5	6500	**F313_112.5 S2 ME2SA4**	**F313_112.5 S2 MX2SA4**	506	**F313_112.5 P80 BE80A4**	**F313_112.5 P80 BX80A4**	507
13.0	375	2.9	106.0	8500	**F413_106.0 S2 ME2SA4**	**F413_106.0 S2 MX2SA4**	510	**F413_106.0 P80 BE80A4**	**F413_106.0 P80 BX80A4**	511
13.1	373	1.1	105.4	6070	**F253_105.4 S2 ME2SA4**	**F253_105.4 S2 MX2SA4**	502	**F253_105.4 P80 BE80A4**	**F253_105.4 P80 BX80A4**	503
13.5	361	1.7	101.9	6500	**F313_101.9 S2 ME2SA4**	**F313_101.9 S2 MX2SA4**	506	**F313_101.9 P80 BE80A4**	**F313_101.9 P80 BX80A4**	507
14.5	338	1.2	95.5	5980	**F253_95.5 S2 ME2SA4**	**F253_95.5 S2 MX2SA4**	502	**F253_95.5 P80 BE80A4**	**F253_95.5 P80 BX80A4**	503
15.8	309	1.9	87.4	6500	**F313_87.4 S2 ME2SA4**	**F313_87.4 S2 MX2SA4**	506	**F313_87.4 P80 BE80A4**	**F313_87.4 P80 BX80A4**	507
16.5	295	1.4	83.4	5840	**F253_83.4 S2 ME2SA4**	**F253_83.4 S2 MX2SA4**	502	**F253_83.4 P80 BE80A4**	**F253_83.4 P80 BX80A4**	503
17.5	279	2.1	78.9	6500	**F313_78.9 S2 ME2SA4**	**F313_78.9 S2 MX2SA4**	506	**F313_78.9 P80 BE80A4**	**F313_78.9 P80 BX80A4**	507
18.0	278	0.9	76.8	4000	**F202_76.8 S2 ME2SA4**	**F202_76.8 S2 MX2SA4**	498	**F202_76.8 P80 BE80A4**	**F202_76.8 P80 BX80A4**	499
18.0	271	1.5	76.6	5750	**F253_76.6 S2 ME2SA4**	**F253_76.6 S2 MX2SA4**	502	**F253_76.6 P80 BE80A4**	**F253_76.6 P80 BX80A4**	503
20.0	250	1.0	69.1	3980	**F202_69.1 S2 ME2SA4**	**F202_69.1 S2 MX2SA4**	498	**F202_69.1 P80 BE80A4**	**F202_69.1 P80 BX80A4**	499
20.0	245	2.5	69.1	6500	**F313_69.1 S2 ME2SA4**	**F313_69.1 S2 MX2SA4**	506	**F313_69.1 P80 BE80A4**	**F313_69.1 P80 BX80A4**	507
21.1	231	1.7	65.3	5570	**F253_65.3 S2 ME2SA4**	**F253_65.3 S2 MX2SA4**	502	**F253_65.3 P80 BE80A4**	**F253_65.3 P80 BX80A4**	503
22.1	221	2.7	62.8	6500				**F313_62.8 P80 BE80A4**	**F313_62.8 P80 BX80A4**	507
22.3	224	1.1	61.9	3890	**F202_61.9 S2 ME2SA4**	**F202_61.9 S2 MX2SA4**	498	**F202_61.9 P80 BE80A4**	**F202_61.9 P80 BX80A4**	499
23.7	207	1.9	58.3	5430	**F253_58.3 S2 ME2SA4**	**F253_58.3 S2 MX2SA4**	502	**F253_58.3 P80 BE80A4**	**F253_58.3 P80 BX80A4**	503
24.3	205	1.2	56.7	3810	**F202_56.7 S2 ME2SA4**	**F202_56.7 S2 MX2SA4**	498	**F202_56.7 P80 BE80A4**	**F202_56.7 P80 BX80A4**	499
26.7	183	3.3	52.1	6500				**F313_52.1 P80 BE80A4**	**F313_52.1 P80 BX80A4**	507
27.2	184	1.4	50.7	3720	**F202_50.7 S2 ME2SA4**	**F202_50.7 S2 MX2SA4**	498	**F202_50.7 P80 BE80A4**	**F202_50.7 P80 BX80A4**	499
27.2	180	2.2	50.8	5270	**F253_50.8 S2 ME2SA4**	**F253_50.8 S2 MX2SA4**	502	**F253_50.8 P80 BE80A4**	**F253_50.8 P80 BX80A4**	503
29.2	167	3.5	47.5	6500				**F313_47.5 P80 BE80A4**	**F313_47.5 P80 BX80A4**	507
31.0	162	1.5	44.8	3610	**F202_44.8 S2 ME2SA4**	**F202_44.8 S2 MX2SA4**	498	**F202_44.8 P80 BE80A4**	**F202_44.8 P80 BX80A4**	499
31.0	161	2.4	44.4	5140	**F252_44.4 S2 ME2SA4**	**F252_44.4 S2 MX2SA4**	502	**F252_44.4 P80 BE80A4**	**F252_44.4 P80 BX80A4**	503
31.0	160	2.5	45.6	5130				**F253_45.6 P80 BE80A4**	**F253_45.6 P80 BX80A4**	503
33.0	151	1.7	41.8	3550	**F202_41.8 S2 ME2SA4**	**F202_41.8 S2 MX2SA4**	498	**F202_41.8 P80 BE80A4**	**F202_41.8 P80 BX80A4**	499
34.0	147	2.5	40.7	5030	**F252_40.7 S2 ME2SA4**	**F252_40.7 S2 MX2SA4**	502	**F252_40.7 P80 BE80A4**	**F252_40.7 P80 BX80A4**	503
35.0	143	1.0	39.6	2800	**F102_39.6 S2 ME2SA4**	**F102_39.6 S2 MX2SA4**	494	**F102_39.6 P80 BE80A4**	**F102_39.6 P80 BX80A4**	495
36.0	137	1.8	37.9	3460	**F202_37.9 S2 ME2SA4**	**F202_37.9 S2 MX2SA4**	498	**F202_37.9 P80 BE80A4**	**F202_37.9 P80 BX80A4**	499
38.0	132	3.0	36.4	4890	**F252_36.4 S2 ME2SA4**	**F252_36.4 S2 MX2SA4**	502	**F252_36.4 P80 BE80A4**	**F252_36.4 P80 BX80A4**	503
39.0	128	1.1	35.3	2800	**F102_35.3 S2 ME2SA4**	**F102_35.3 S2 MX2SA4**	494	**F102_35.3 P80 BE80A4**	**F102_35.3 P80 BX80A4**	495
42.0	119	1.2	33.0	2750	**F102_33.0 S2 ME2SA4**	**F102_33.0 S2 MX2SA4**	494	**F102_33.0 P80 BE80A4**	**F102_33.0 P80 BX80A4**	495
42.0	120	2.1	33.1	3340	**F202_33.1 S2 ME2SA4**	**F202_33.1 S2 MX2SA4**	498	**F202_33.1 P80 BE80A4**	**F202_33.1 P80 BX80A4**	499
43.0	116	3.4	32.2	4730	**F252_32.2 S2 ME2SA4**	**F252_32.2 S2 MX2SA4**	502	**F252_32.2 P80 BE80A4**	**F252_32.2 P80 BX80A4**	503
45.0	110	2.3	30.4	3260	**F202_30.4 S2 ME2SA4**	**F202_30.4 S2 MX2SA4**	498	**F202_30.4 P80 BE80A4**	**F202_30.4 P80 BX80A4**	499

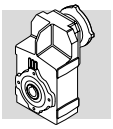

0.55 kW

n_2 min-1	M_2 Nm	S	i	R_{n2} N	IE2	IE3		IE2	IEC IE3	
47.0	107	1.3	29.6	2680	**F102_29.6 S2 ME2SA4**	**F102_29.6 S2 MX2SA4**	494	**F102_29.6 P80 BE80A4**	**F102_29.6 P80 BX80A4**	495
53.0	94	2.6	25.9	3130	**F202_25.9 S2 ME2SA4**	**F202_25.9 S2 MX2SA4**	498	**F202_25.9 P80 BE80A4**	**F202_25.9 P80 BX80A4**	499
54.0	93	1.5	25.8	2590	**F102_25.8 S2 ME2SA4**	**F102_25.8 S2 MX2SA4**	494	**F102_25.8 P80 BE80A4**	**F102_25.8 P80 BX80A4**	495
60	83	1.7	22.8	2510	**F102_22.8 S2 ME2SA4**	**F102_22.8 S2 MX2SA4**	494	**F102_22.8 P80 BE80A4**	**F102_22.8 P80 BX80A4**	495
60	84	2.8	23.1	3030	**F202_23.1 S2 ME2SA4**	**F202_23.1 S2 MX2SA4**	498	**F202_23.1 P80 BE80A4**	**F202_23.1 P80 BX80A4**	499
68	73	3.1	20.2	2910	**F202_20.2 S2 ME2SA4**	**F202_20.2 S2 MX2SA4**	498	**F202_20.2 P80 BE80A4**	**F202_20.2 P80 BX80A4**	499
71	70	1.9	19.3	2400	**F102_19.3 S2 ME2SA4**	**F102_19.3 S2 MX2SA4**	494	**F102_19.3 P80 BE80A4**	**F102_19.3 P80 BX80A4**	495
77	65	3.3	18.1	2820	**F202_18.1 S2 ME2SA4**	**F202_18.1 S2 MX2SA4**	498	**F202_18.1 P80 BE80A4**	**F202_18.1 P80 BX80A4**	499
81	61	2.1	17.0	2310	**F102_17.0 S2 ME2SA4**	**F102_17.0 S2 MX2SA4**	494	**F102_17.0 P80 BE80A4**	**F102_17.0 P80 BX80A4**	495
94	53	2.2	14.6	2220	**F102_14.6 S2 ME2SA4**	**F102_14.6 S2 MX2SA4**	494	**F102_14.6 P80 BE80A4**	**F102_14.6 P80 BX80A4**	495
106	47	2.2	13.0	2140	**F102_13.0 S2 ME2SA4**	**F102_13.0 S2 MX2SA4**	494	**F102_13.0 P80 BE80A4**	**F102_13.0 P80 BX80A4**	495
120	42	2.3	11.5	2070	**F102_11.5 S2 ME2SA4**	**F102_11.5 S2 MX2SA4**	494	**F102_11.5 P80 BE80A4**	**F102_11.5 P80 BX80A4**	495
141	35	2.5	9.8	1970	**F102_9.8 S2 ME2SA4**	**F102_9.8 S2 MX2SA4**	494	**F102_9.8 P80 BE80A4**	**F102_9.8 P80 BX80A4**	495
161	31	2.6	8.6	1890	**F102_8.6 S2 ME2SA4**	**F102_8.6 S2 MX2SA4**	494	**F102_8.6 P80 BE80A4**	**F102_8.6 P80 BX80A4**	495
186	27	2.8	7.4	1810	**F102_7.4 S2 ME2SA4**	**F102_7.4 S2 MX2SA4**	494	**F102_7.4 P80 BE80A4**	**F102_7.4 P80 BX80A4**	495

0.55 kW

n_2 min-1	M_2 Nm	S	i	R_{n2} N	IE3		IEC IE3	
0.7	6885	1.2	1987.0	45000			**F804_1987 P80 BXN80MA4**	526
0.8	6356	1.3	1834.0	45000			**F804_1834 P80 BXN80MA4**	526
0.8	5923	1.4	1709.0	45000			**F804_1709 P80 BXN80MA4**	526
0.9	5491	0.9	1585.0	35000			**F704_1585 P80 BXN80MA4**	523
0.9	5467	1.5	1578.0	45000			**F804_1578 P80 BXN80MA4**	526
0.9	5134	1.0	1481.0	35000			**F704_1481 P80 BXN80MA4**	523
1.0	4739	1.1	1368.0	35000			**F704_1368 P80 BXN80MA4**	523
1.0	4795	1.7	1384.0	45000			**F804_1384 P80 BXN80MA4**	526
1.1	4427	1.8	1277.0	45000			**F804_1277 P80 BXN80MA4**	526
1.2	4095	1.2	1182.0	35000			**F704_1182 P80 BXN80MA4**	523
1.2	3972	2.0	1146.0	45000			**F804_1146 P80 BXN80MA4**	526
1.3	3780	1.3	1091.0	35000			**F704_1091 P80 BXN80MA4**	523
1.3	3667	2.2	1058.0	45000			**F804_1058 P80 BXN80MA4**	526
1.4	3323	0.9	958.9	20000			**F604_958.9 P80 BXN80MA4**	519
1.4	3377	1.5	974.4	35000			**F704_974.4 P80 BXN80MA4**	523
1.5	3117	1.6	899.4	35000			**F704_899.4 P80 BXN80MA4**	523
1.5	3109	2.6	897.3	45000			**F804_897.3 P80 BXN80MA4**	526
1.6	3067	0.9	885.1	20000			**F604_885.1 P80 BXN80MA4**	519
1.7	2849	1.8	822.2	35000			**F704_822.2 P80 BXN80MA4**	523
1.8	2684	3.0	774.4	45000			**F804_774.4 P80 BXN80MA4**	526
1.9	2477	3.2	714.9	45000			**F804_714.9 P80 BXN80MA4**	526
2.1	2295	1.3	662.4	20000			**F604_662.4 P80 BXN80MA4**	519
2.1	2278	2.2	657.4	35000			**F704_657.4 P80 BXN80MA4**	523
2.3	2119	1.4	611.4	20000			**F604_611.4 P80 BXN80MA4**	519
2.3	2103	2.4	606.8	35000			**F704_606.8 P80 BXN80MA4**	523
2.6	1838	1.0	530.5	12000			**F514_530.5 P80 BXN80MA4**	515
2.6	1839	1.6	530.7	20000			**F604_530.7 P80 BXN80MA4**	519
2.7	1769	2.8	510.4	35000			**F704_510.4 P80 BXN80MA4**	523
2.8	1698	1.7	489.8	20000			**F604_489.8 P80 BXN80MA4**	519
2.9	1633	3.1	471.2	35000			**F704_471.2 P80 BXN80MA4**	523
3.2	1487	1.2	429.1	12000			**F514_429.1 P80 BXN80MA4**	515
3.2	1499	1.9	432.6	20000			**F604_432.6 P80 BXN80MA4**	519
3.5	1384	2.1	399.3	20000			**F604_399.3 P80 BXN80MA4**	519
3.9	1248	1.4	352.5	12000			**F513_352.5 P80 BXN80MA4**	515

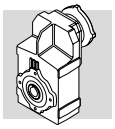

0.55 kW

n_2 min^{-1}	M_2 Nm	S	i	R_{n2} N	IE3		IEC IE3	
4.0	1221	0.9	344.8	8500			**F413_344.8 P80 BXN80MA4**	511
4.0	1184	2.4	341.7	20000			**F604_341.7 P80 BXN80MA4**	519
4.3	1124	1.6	317.3	12000			**F513_317.3 P80 BXN80MA4**	515
4.4	1093	2.7	315.4	20000			**F604_315.4 P80 BXN80MA4**	519
4.7	1050	1.0	296.6	8500			**F413_296.6 P80 BXN80MA4**	511
4.8	1013	1.8	285.9	12000			**F513_285.9 P80 BXN80MA4**	515
5.2	945	1.2	266.9	8500			**F413_266.9 P80 BXN80MA4**	511
5.3	928	1.9	262.1	12000			**F513_262.1 P80 BXN80MA4**	515
5.7	850	1.3	240.1	8500			**F413_240.1 P80 BXN80MA4**	511
5.8	849	2.1	239.8	12000			**F513_239.8 P80 BXN80MA4**	515
6.3	780	1.4	220.1	8500			**F413_220.1 P80 BXN80MA4**	511
6.4	768	2.3	216.9	12000			**F513_216.9 P80 BXN80MA4**	515
6.8	717	2.5	202.4	12000			**F513_202.4 P80 BXN80MA4**	515
6.9	704	1.6	198.9	8500			**F413_198.9 P80 BXN80MA4**	511
7.4	657	0.9	185.4	6500			**F313_185.4 P80 BXN80MA4**	507
7.6	640	1.7	180.7	8500			**F413_180.7 P80 BXN80MA4**	511
8.2	597	1.8	168.7	8500			**F413_168.7 P80 BXN80MA4**	511
8.3	591	1.0	166.8	6500			**F313_166.8 P80 BXN80MA4**	507
8.3	587	3.1	165.6	12000			**F513_165.6 P80 BXN80MA4**	515
9.2	534	1.1	150.8	6500			**F313_150.8 P80 BXN80MA4**	507
9.8	498	1.2	140.7	6500			**F313_140.7 P80 BXN80MA4**	507
10.3	476	2.3	134.4	8500			**F413_134.4 P80 BXN80MA4**	511
10.7	455	1.3	128.4	6500			**F313_128.4 P80 BXN80MA4**	507
12.2	400	1.0	113.0	6130	**F253_113.0 SX20 MXN20MA4**	502	**F253_113.0 P80 BXN80MA4**	503
12.3	399	1.5	112.5	6500			**F313_112.5 P80 BXN80MA4**	507
13.0	375	2.9	106.0	8500			**F413_106.0 P80 BXN80MA4**	511
13.1	373	1.1	105.4	6070	**F253_105.4 SX20 MXN20MA4**	502	**F253_105.4 P80 BXN80MA4**	503
13.5	361	1.7	101.9	6500			**F313_101.9 P80 BXN80MA4**	507
14.5	338	1.2	95.5	5980	**F253_95.5 SX20 MXN20MA4**	502	**F253_95.5 P80 BXN80MA4**	503
15.8	309	1.9	87.4	6500			**F313_87.4 P80 BXN80MA4**	507
16.5	295	1.4	83.4	5840	**F253_83.4 SX20 MXN20MA4**	502	**F253_83.4 P80 BXN80MA4**	503
17.5	279	2.1	78.9	6500			**F313_78.9 P80 BXN80MA4**	507
18.0	278	0.9	76.8	4000	**F202_76.8 SX20 MXN20MA4**	498	**F202_76.8 P80 BXN80MA4**	499
18.0	271	1.5	76.6	5750	**F253_76.6 SX20 MXN20MA4**	502	**F253_76.6 P80 BXN80MA4**	503
20.0	250	1.0	69.1	3980	**F202_69.1 SX20 MXN20MA4**	498	**F202_69.1 P80 BXN80MA4**	499
20.0	245	2.5	69.1	6500			**F313_69.1 P80 BXN80MA4**	507
21.1	231	1.7	65.3	5570	**F253_65.3 SX20 MXN20MA4**	502	**F253_65.3 P80 BXN80MA4**	503
22.1	221	2.7	62.8	6500			**F313_62.8 P80 BXN80MA4**	507
22.3	224	1.1	61.9	3890	**F202_61.9 SX20 MXN20MA4**	498	**F202_61.9 P80 BXN80MA4**	499
23.7	207	1.9	58.3	5430	**F253_58.3 SX20 MXN20MA4**	502	**F253_58.3 P80 BXN80MA4**	503
24.3	205	1.2	56.7	3810	**F202_56.7 SX20 MXN20MA4**	498	**F202_56.7 P80 BXN80MA4**	499
26.7	183	3.3	52.1	6500			**F313_52.1 P80 BXN80MA4**	507
27.2	184	1.4	50.7	3720	**F202_50.7 SX20 MXN20MA4**	498	**F202_50.7 P80 BXN80MA4**	499
27.2	180	2.2	50.8	5270	**F253_50.8 SX20 MXN20MA4**	502	**F253_50.8 P80 BXN80MA4**	503
29.2	167	3.5	47.5	6500			**F313_47.5 P80 BXN80MA4**	507
31.0	162	1.5	44.8	3610	**F202_44.8 SX20 MXN20MA4**	498	**F202_44.8 P80 BXN80MA4**	499
31.0	161	2.4	44.4	5140	**F252_44.4 SX20 MXN20MA4**	502	**F252_44.4 P80 BXN80MA4**	503
31.0	160	2.5	45.6	5130			**F253_45.6 P80 BXN80MA4**	503
33.0	151	1.7	41.8	3550	**F202_41.8 SX20 MXN20MA4**	498	**F202_41.8 P80 BXN80MA4**	499
34.0	147	2.5	40.7	5030	**F252_40.7 SX20 MXN20MA4**	502	**F252_40.7 P80 BXN80MA4**	503
35.0	143	1.0	39.6	2800	**F102_39.6 SX20 MXN20MA4**	494	**F102_39.6 P80 BXN80MA4**	495
36.0	137	1.8	37.9	3460	**F202_37.9 SX20 MXN20MA4**	498	**F202_37.9 P80 BXN80MA4**	499
38.0	132	3.0	36.4	4890	**F252_36.4 SX20 MXN20MA4**	502	**F252_36.4 P80 BXN80MA4**	503
39.0	128	1.1	35.3	2800	**F102_35.3 SX20 MXN20MA4**	494	**F102_35.3 P80 BXN80MA4**	495
42.0	119	1.2	33.0	2750	**F102_33.0 SX20 MXN20MA4**	494	**F102_33.0 P80 BXN80MA4**	495
42.0	120	2.1	33.1	3340	**F202_33.1 SX20 MXN20MA4**	498	**F202_33.1 P80 BXN80MA4**	499
43.0	116	3.4	32.2	4730	**F252_32.2 SX20 MXN20MA4**	502	**F252_32.2 P80 BXN80MA4**	503

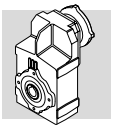

0.55 kW

n_2 min-1	M_2 Nm	S	i	R_{n2} N	IE3		IEC IE3	
45.0	110	2.3	30.4	3260	**F202_30.4 SX20 MXN20MA4**	498	**F202_30.4 P80 BXN80MA4**	499
47.0	107	1.3	29.6	2680	**F102_29.6 SX20 MXN20MA4**	494	**F102_29.6 P80 BXN80MA4**	495
53.0	94	2.6	25.9	3130	**F202_25.9 SX20 MXN20MA4**	498	**F202_25.9 P80 BXN80MA4**	499
54.0	93	1.5	25.8	2590	**F102_25.8 SX20 MXN20MA4**	494	**F102_25.8 P80 BXN80MA4**	495
60.0	83	1.7	22.8	2510	**F102_22.8 SX20 MXN20MA4**	494	**F102_22.8 P80 BXN80MA4**	495
60.0	84	2.8	23.1	3030	**F202_23.1 SX20 MXN20MA4**	498	**F202_23.1 P80 BXN80MA4**	499
68.0	73	3.1	20.2	2910	**F202_20.2 SX20 MXN20MA4**	498	**F202_20.2 P80 BXN80MA4**	499
71.0	70	1.9	19.3	2400	**F102_19.3 SX20 MXN20MA4**	494	**F102_19.3 P80 BXN80MA4**	495
77.0	65	3.3	18.1	2820	**F202_18.1 SX20 MXN20MA4**	498	**F202_18.1 P80 BXN80MA4**	499
81.0	61	2.1	17.0	2310	**F102_17.0 SX20 MXN20MA4**	494	**F102_17.0 P80 BXN80MA4**	495
94.0	53	2.2	14.6	2220	**F102_14.6 SX20 MXN20MA4**	494	**F102_14.6 P80 BXN80MA4**	495
106.0	47	2.2	13.0	2140	**F102_13.0 SX20 MXN20MA4**	494	**F102_13.0 P80 BXN80MA4**	495
120.0	42	2.3	11.5	2070	**F102_11.5 SX20 MXN20MA4**	494	**F102_11.5 P80 BXN80MA4**	495
141.0	35	2.5	9.8	1970	**F102_9.8 SX20 MXN20MA4**	494	**F102_9.8 P80 BXN80MA4**	495
161.0	31	2.6	8.6	1890	**F102_8.6 SX20 MXN20MA4**	494	**F102_8.6 P80 BXN80MA4**	495
186.0	27	2.8	7.4	1810	**F102_7.4 SX20 MXN20MA4**	494	**F102_7.4 P80 BXN80MA4**	495

0.75 kW

n_2 min-1	M_2 Nm	S	i	R_{n2} N	IE2	IE3		IEC IE2	IE3	
0.45	14391	1.0	2098.7	55000	**F904_2099 S3 ME3SA6**		528	**F904_2099 P90 BE90S6**		529
0.49	13284	1.1	1937.3	55000	**F904_1937 S3 ME3SA6**		528	**F904_1937 P90 BE90S6**		529
0.55	11673	1.2	1702.3	55000	**F904_1702 S3 ME3SA6**		528	**F904_1702 P90 BE90S6**		529
0.60	10775	1.3	1571.4	55000	**F904_1571 S3 ME3SA6**		528	**F904_1571 P90 BE90S6**		529
0.66	9791	1.4	1427.9	55000	**F904_1428 S3 ME3SA6**		528	**F904_1428 P90 BE90S6**		529
0.68	9444	1.5	2098.7	55000	**F904_2099 S2 ME2SB4**	**F904_2099 S2 MX2SB4**	528	**F904_2099 P80 BE80B4**	**F904_2099 P80 BX80B4**	529
0.72	8941	0.9	1986.8	45000	**F804_1987 S2 ME2SB4**	**F804_1987 S2 MX2SB4**	525	**F804_1987 P80 BE80B4**	**F804_1987 P80 BX80B4**	526
0.74	8718	1.6	1937.3	55000	**F904_1937 S2 ME2SB4**	**F904_1937 S2 MX2SB4**	528	**F904_1937 P80 BE80B4**	**F904_1937 P80 BX80B4**	529
0.78	8253	1.0	1834.0	45000	**F804_1834 S2 ME2SB4**	**F804_1834 S2 MX2SB4**	525	**F804_1834 P80 BE80B4**	**F804_1834 P80 BX80B4**	526
0.84	7691	1.0	1709.1	45000	**F804_1709 S2 ME2SB4**	**F804_1709 S2 MX2SB4**	525	**F804_1709 P80 BE80B4**	**F804_1709 P80 BX80B4**	526
0.84	7660	1.8	1702.3	55000	**F904_1702 S2 ME2SB4**	**F904_1702 S2 MX2SB4**	528	**F904_1702 P80 BE80B4**	**F904_1702 P80 BX80B4**	529
0.91	7099	1.1	1577.6	45000	**F804_1578 S2 ME2SB4**	**F804_1578 S2 MX2SB4**	525	**F804_1578 P80 BE80B4**	**F804_1578 P80 BX80B4**	526
0.91	7071	2.0	1571.4	55000	**F904_1571 S2 ME2SB4**	**F904_1571 S2 MX2SB4**	528	**F904_1571 P80 BE80B4**	**F904_1571 P80 BX80B4**	529
1.0	6426	2.2	1427.9	55000	**F904_1428 S2 ME2SB4**	**F904_1428 S2 MX2SB4**	528	**F904_1428 P80 BE80B4**	**F904_1428 P80 BX80B4**	529
1.0	6227	1.3	1383.8	45000	**F804_1384 S2 ME2SB4**	**F804_1384 S2 MX2SB4**	525	**F804_1384 P80 BE80B4**	**F804_1384 P80 BX80B4**	526
1.1	5931	2.4	1318.1	55000	**F904_1318 S2 ME2SB4**	**F904_1318 S2 MX2SB4**	528	**F904_1318 P80 BE80B4**	**F904_1318 P80 BX80B4**	529
1.1	5748	1.4	1277.3	45000	**F804_1277 S2 ME2SB4**	**F804_1277 S2 MX2SB4**	525	**F804_1277 P80 BE80B4**	**F804_1277 P80 BX80B4**	526
1.2	5422	2.6	1204.9	55000	**F904_1205 S2 ME2SB4**	**F904_1205 S2 MX2SB4**	528	**F904_1205 P80 BE80B4**	**F904_1205 P80 BX80B4**	529
1.2	5318	0.9	1181.8	35000	**F704_1182 S2 ME2SB4**	**F704_1182 S2 MX2SB4**	522	**F704_1182 P80 BE80B4**	**F704_1182 P80 BX80B4**	523
1.2	5158	1.6	1146.2	45000	**F804_1146 S2 ME2SB4**	**F804_1146 S2 MX2SB4**	525	**F804_1146 P80 BE80B4**	**F804_1146 P80 BX80B4**	526
1.3	5005	2.8	1112.3	55000	**F904_1112 S2 ME2SB4**	**F904_1112 S2 MX2SB4**	528	**F904_1112 P80 BE80B4**	**F904_1112 P80 BX80B4**	529
1.3	4909	1.0	1090.9	35000	**F704_1091 S2 ME2SB4**	**F704_1091 S2 MX2SB4**	522	**F704_1091 P80 BE80B4**	**F704_1091 P80 BX80B4**	523
1.4	4761	1.7	1058.1	45000	**F804_1058 S2 ME2SB4**	**F804_1058 S2 MX2SB4**	525	**F804_1058 P80 BE80B4**	**F804_1058 P80 BX80B4**	526
1.5	4437	3.2	986.0	55000	**F904_986.0 S2 ME2SB4**	**F904_986.0 S2 MX2SB4**	528	**F904_986.0 P80 BE80B4**	**F904_986.0 P80 BX80B4**	529
1.5	4385	1.1	974.4	35000	**F704_974.4 S2 ME2SB4**	**F704_974.4 S2 MX2SB4**	522	**F704_974.4 P80 BE80B4**	**F704_974.4 P80 BX80B4**	523
1.5	4374	1.8	972.0	45000	**F804_972.0 S2 ME2SB4**	**F804_972.0 S2 MX2SB4**	525	**F804_972.0 P80 BE80B4**	**F804_972.0 P80 BX80B4**	526
1.6	4096	3.4	910.2	55000	**F904_910.2 S2 ME2SB4**	**F904_910.2 S2 MX2SB4**	528	**F904_910.2 P80 BE80B4**	**F904_910.2 P80 BX80B4**	529
1.6	4047	1.2	899.4	35000	**F704_899.4 S2 ME2SB4**	**F704_899.4 S2 MX2SB4**	522	**F704_899.4 P80 BE80B4**	**F704_899.4 P80 BX80B4**	523
1.6	4038	2.0	897.3	45000	**F804_897.3 S2 ME2SB4**	**F804_897.3 S2 MX2SB4**	525	**F804_897.3 P80 BE80B4**	**F804_897.3 P80 BX80B4**	526
1.7	3700	1.4	822.2	35000	**F704_822.2 S2 ME2SB4**	**F704_822.2 S2 MX2SB4**	522	**F704_822.2 P80 BE80B4**	**F704_822.2 P80 BX80B4**	523
1.8	3485	2.3	774.4	45000	**F804_774.4 S2 ME2SB4**	**F804_774.4 S2 MX2SB4**	525	**F804_774.4 P80 BE80B4**	**F804_774.4 P80 BX80B4**	526
1.9	3415	1.5	759.0	35000	**F704_759.0 S2 ME2SB4**	**F704_759.0 S2 MX2SB4**	522	**F704_759.0 P80 BE80B4**	**F704_759.0 P80 BX80B4**	523
2.0	3217	2.5	714.9	45000	**F804_714.9 S2 ME2SB4**	**F804_714.9 S2 MX2SB4**	525	**F804_714.9 P80 BE80B4**	**F804_714.9 P80 BX80B4**	526
2.2	2981	1.0	662.4	20000	**F604_662.4 S2 ME2SB4**	**F604_662.4 S2 MX2SB4**	518	**F604_662.4 P80 BE80B4**	**F604_662.4 P80 BX80B4**	519
2.2	2958	1.7	657.4	35000	**F704_657.4 S2 ME2SB4**	**F704_657.4 S2 MX2SB4**	522	**F704_657.4 P80 BE80B4**	**F704_657.4 P80 BX80B4**	523

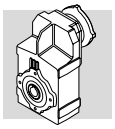

0.75 kW

n_2 min-1	M_2 Nm	S	i	R_{n2} N	IE2	IE3		IE2	IE3	
2.3	2751	1.1	611.4	20000	**F604_611.4 S2 ME2SB4**	**F604_611.4 S2 MX2SB4**	518	**F604_611.4 P80 BE80B4**	**F604_611.4 P80 BX80B4**	519
2.3	2749	2.9	610.9	45000	**F804_610.9 S2 ME2SB4**	**F804_610.9 S2 MX2SB4**	525	**F804_610.9 P80 BE80B4**	**F804_610.9 P80 BX80B4**	526
2.4	2731	1.8	606.8	35000	**F704_606.8 S2 ME2SB4**	**F704_606.8 S2 MX2SB4**	522	**F704_606.8 P80 BE80B4**	**F704_606.8 P80 BX80B4**	523
2.5	2537	3.2	563.9	45000	**F804_563.9 S2 ME2SB4**	**F804_563.9 S2 MX2SB4**	525	**F804_563.9 P80 BE80B4**	**F804_563.9 P80 BX80B4**	526
2.7	2388	1.2	530.7	20000	**F604_530.7 S2 ME2SB4**	**F604_530.7 S2 MX2SB4**	518	**F604_530.7 P80 BE80B4**	**F604_530.7 P80 BX80B4**	519
2.8	2297	2.2	510.4	35000	**F704_510.4 S2 ME2SB4**	**F704_510.4 S2 MX2SB4**	522	**F704_510.4 P80 BE80B4**	**F704_510.4 P80 BX80B4**	523
2.9	2204	1.3	489.8	20000	**F604_489.8 S2 ME2SB4**	**F604_489.8 S2 MX2SB4**	518	**F604_489.8 P80 BE80B4**	**F604_489.8 P80 BX80B4**	519
3.0	2120	2.4	471.2	35000	**F704_471.2 S2 ME2SB4**	**F704_471.2 S2 MX2SB4**	522	**F704_471.2 P80 BE80B4**	**F704_471.2 P80 BX80B4**	523
3.3	1947	1.5	432.6	20000	**F604_432.6 S2 ME2SB4**	**F604_432.6 S2 MX2SB4**	518	**F604_432.6 P80 BE80B4**	**F604_432.6 P80 BX80B4**	519
3.3	1931	0.9	429.1	12000	**F514_429.1 S2 ME2SB4**	**F514_429.1 S2 MX2SB4**	514	**F514_429.1 P80 BE80B4**	**F514_429.1 P80 BX80B4**	515
3.5	1816	2.8	403.5	35000	**F704_403.5 S2 ME2SB4**	**F704_403.5 S2 MX2SB4**	522	**F704_403.5 P80 BE80B4**	**F704_403.5 P80 BX80B4**	523
3.6	1797	1.6	399.3	20000	**F604_399.3 S2 ME2SB4**	**F604_399.3 S2 MX2SB4**	518	**F604_399.3 P80 BE80B4**	**F604_399.3 P80 BX80B4**	519
3.8	1676	3.0	372.5	35000	**F704_372.5 S2 ME2SB4**	**F704_372.5 S2 MX2SB4**	522	**F704_372.5 P80 BE80B4**	**F704_372.5 P80 BX80B4**	523
4.1	1639	1.1	352.5	12000	**F513_352.5 S2 ME2SB4**	**F513_352.5 S2 MX2SB4**	514	**F513_352.5 P80 BE80B4**	**F513_352.5 P80 BX80B4**	515
4.2	1538	1.9	341.7	20000	**F604_341.7 S2 ME2SB4**	**F604_341.7 S2 MX2SB4**	518	**F604_341.7 P80 BE80B4**	**F604_341.7 P80 BX80B4**	519
4.5	1475	1.2	317.3	12000	**F513_317.3 S2 ME2SB4**	**F513_317.3 S2 MX2SB4**	514	**F513_317.3 P80 BE80B4**	**F513_317.3 P80 BX80B4**	515
4.5	1419	2.0	315.4	20000	**F604_315.4 S2 ME2SB4**	**F604_315.4 S2 MX2SB4**	518	**F604_315.4 P80 BE80B4**	**F604_315.4 P80 BX80B4**	519
4.7	1370	3.7	304.3	35000	**F704_304.3 S2 ME2SB4**	**F704_304.3 S2 MX2SB4**	522	**F704_304.3 P80 BE80B4**	**F704_304.3 P80 BX80B4**	523
5.0	1330	1.4	285.9	12000	**F513_285.9 S2 ME2SB4**	**F513_285.9 S2 MX2SB4**	514	**F513_285.9 P80 BE80B4**	**F513_285.9 P80 BX80B4**	515
5.1	1305	2.2	280.7	20000	**F603_280.7 S2 ME2SB4**	**F603_280.7 S2 MX2SB4**	518	**F603_280.7 P80 BE80B4**	**F603_280.7 P80 BX80B4**	519
5.5	1219	1.5	262.1	12000	**F513_262.1 S2 ME2SB4**	**F513_262.1 S2 MX2SB4**	514	**F513_262.1 P80 BE80B4**	**F513_262.1 P80 BX80B4**	515
5.5	1205	2.4	259.1	20000	**F603_259.1 S2 ME2SB4**	**F603_259.1 S2 MX2SB4**	518	**F603_259.1 P80 BE80B4**	**F603_259.1 P80 BX80B4**	519
6.0	1117	1.0	240.1	8500	**F413_240.1 S2 ME2SB4**	**F413_240.1 S2 MX2SB4**	510	**F413_240.1 P80 BE80B4**	**F413_240.1 P80 BX80B4**	511
6.0	1115	1.6	239.8	12000	**F513_239.8 S2 ME2SB4**	**F513_239.8 S2 MX2SB4**	514	**F513_239.8 P80 BE80B4**	**F513_239.8 P80 BX80B4**	515
6.1	1096	2.6	235.8	20000	**F603_235.8 S2 ME2SB4**	**F603_235.8 S2 MX2SB4**	518	**F603_235.8 P80 BE80B4**	**F603_235.8 P80 BX80B4**	519
6.5	1024	1.1	220.1	8500	**F413_220.1 S2 ME2SB4**	**F413_220.1 S2 MX2SB4**	510	**F413_220.1 P80 BE80B4**	**F413_220.1 P80 BX80B4**	511
6.6	1012	2.9	217.6	20000	**F603_217.6 S2 ME2SB4**	**F603_217.6 S2 MX2SB4**	518	**F603_217.6 P80 BE80B4**	**F603_217.6 P80 BX80B4**	519
6.6	1008	1.8	216.9	12000	**F513_216.9 S2 ME2SB4**	**F513_216.9 S2 MX2SB4**	514	**F513_216.9 P80 BE80B4**	**F513_216.9 P80 BX80B4**	515
7.1	941	1.9	202.4	12000	**F513_202.4 S2 ME2SB4**	**F513_202.4 S2 MX2SB4**	514	**F513_202.4 P80 BE80B4**	**F513_202.4 P80 BX80B4**	515
7.1	936	3.1	201.4	20000	**F603_201.4 S2 ME2SB4**	**F603_201.4 S2 MX2SB4**	518	**F603_201.4 P80 BE80B4**	**F603_201.4 P80 BX80B4**	519
7.2	925	1.2	198.9	8500	**F413_198.9 S2 ME2SB4**	**F413_198.9 S2 MX2SB4**	510	**F413_198.9 P80 BE80B4**	**F413_198.9 P80 BX80B4**	511
7.7	864	3.4	185.9	20000	**F603_185.9 S2 ME2SB4**	**F603_185.9 S2 MX2SB4**	518	**F603_185.9 P80 BE80B4**	**F603_185.9 P80 BX80B4**	519
7.9	840	1.3	180.7	8500	**F413_180.7 S2 ME2SB4**	**F413_180.7 S2 MX2SB4**	510	**F413_180.7 P80 BE80B4**	**F413_180.7 P80 BX80B4**	511
8.5	784	1.4	168.7	8500	**F413_168.7 S2 ME2SB4**	**F413_168.7 S2 MX2SB4**	510	**F413_168.7 P80 BE80B4**	**F413_168.7 P80 BX80B4**	511
8.6	770	2.3	165.6	12000	**F513_165.6 S2 ME2SB4**	**F513_165.6 S2 MX2SB4**	514	**F513_165.6 P80 BE80B4**	**F513_165.6 P80 BX80B4**	515
8.8	757	3.8	162.9	20000	**F603_162.9 S2 ME2SB4**	**F603_162.9 S2 MX2SB4**	518	**F603_162.9 P80 BE80B4**	**F603_162.9 P80 BX80B4**	519
10.2	654	0.9	140.7	6500	**F313_140.7 S2 ME2SB4**	**F313_140.7 S2 MX2SB4**	506	**F313_140.7 P80 BE80B4**	**F313_140.7 P80 BX80B4**	507
10.6	625	1.8	134.4	8500	**F413_134.4 S2 ME2SB4**	**F413_134.4 S2 MX2SB4**	510	**F413_134.4 P80 BE80B4**	**F413_134.4 P80 BX80B4**	511
11.0	604	3.0	129.9	12000	**F513_129.9 S2 ME2SB4**	**F513_129.9 S2 MX2SB4**	514	**F513_129.9 P80 BE80B4**	**F513_129.9 P80 BX80B4**	515
11.1	597	1.0	128.4	6500	**F313_128.4 S2 ME2SB4**	**F313_128.4 S2 MX2SB4**	506	**F313_128.4 P80 BE80B4**	**F313_128.4 P80 BX80B4**	507
12.7	523	1.1	112.5	6500	**F313_112.5 S2 ME2SB4**	**F313_112.5 S2 MX2SB4**	506	**F313_112.5 P80 BE80B4**	**F313_112.5 P80 BX80B4**	507
13.5	493	2.2	106.0	8500	**F413_106.0 S2 ME2SB4**	**F413_106.0 S2 MX2SB4**	510	**F413_106.0 P80 BE80B4**	**F413_106.0 P80 BX80B4**	511
14.0	474	1.3	101.9	6500	**F313_101.9 S2 ME2SB4**	**F313_101.9 S2 MX2SB4**	506	**F313_101.9 P80 BE80B4**	**F313_101.9 P80 BX80B4**	507
15.0	444	0.9	95.5	5450	**F253_95.5 S2 ME2SB4**	**F253_95.5 S2 MX2SB4**	502	**F253_95.5 P80 BE80B4**	**F253_95.5 P80 BX80B4**	503
16.4	406	1.5	87.4	6500	**F313_87.4 S2 ME2SB4**	**F313_87.4 S2 MX2SB4**	506	**F313_87.4 P80 BE80B4**	**F313_87.4 P80 BX80B4**	507
16.8	395	2.8	84.9	8500	**F413_84.9 S2 ME2SB4**	**F413_84.9 S2 MX2SB4**	510	**F413_84.9 P80 BE80B4**	**F413_84.9 P80 BX80B4**	511
17.1	388	1.0	83.4	5350	**F253_83.4 S2 ME2SB4**	**F253_83.4 S2 MX2SB4**	502	**F253_83.4 P80 BE80B4**	**F253_83.4 P80 BX80B4**	503
18.1	367	1.6	78.9	6500	**F313_78.9 S2 ME2SB4**	**F313_78.9 S2 MX2SB4**	506	**F313_78.9 P80 BE80B4**	**F313_78.9 P80 BX80B4**	507
18.7	356	1.1	76.6	5300	**F253_76.6 S2 ME2SB4**	**F253_76.6 S2 MX2SB4**	502	**F253_76.6 P80 BE80B4**	**F253_76.6 P80 BX80B4**	503
20.7	321	1.9	69.1	6500	**F313_69.1 S2 ME2SB4**	**F313_69.1 S2 MX2SB4**	506	**F313_69.1 P80 BE80B4**	**F313_69.1 P80 BX80B4**	507
21.5	309	3.6	66.5	8500	**F413_66.5 S2 ME2SB4**	**F413_66.5 S2 MX2SB4**	510	**F413_66.5 P80 BE80B4**	**F413_66.5 P80 BX80B4**	511
21.9	304	1.3	65.3	5180	**F253_65.3 S2 ME2SB4**	**F253_65.3 S2 MX2SB4**	502	**F253_65.3 P80 BE80B4**	**F253_65.3 P80 BX80B4**	503
22.8	292	2.1	62.8	6500	**F313_62.8 S2 ME2SB4**	**F313_62.8 S2 MX2SB4**	506	**F313_62.8 P80 BE80B4**	**F313_62.8 P80 BX80B4**	507
24.5	271	1.5	58.3	5080	**F253_58.3 S2 ME2SB4**	**F253_58.3 S2 MX2SB4**	502	**F253_58.3 P80 BE80B4**	**F253_58.3 P80 BX80B4**	503
25.2	269	0.9	56.7	3590	**F202_56.7 S2 ME2SB4**	**F202_56.7 S2 MX2SB4**	498	**F202_56.7 P80 BE80B4**	**F202_56.7 P80 BX80B4**	499
27.5	242	2.5	52.1	6500	**F313_52.1 S2 ME2SB4**	**F313_52.1 S2 MX2SB4**	506	**F313_52.1 P80 BE80B4**	**F313_52.1 P80 BX80B4**	507
28.2	236	1.7	50.8	4960	**F253_50.8 S2 ME2SB4**	**F253_50.8 S2 MX2SB4**	502	**F253_50.8 P80 BE80B4**	**F253_50.8 P80 BX80B4**	503
28.2	241	1.0	50.7	3510	**F202_50.7 S2 ME2SB4**	**F202_50.7 S2 MX2SB4**	498	**F202_50.7 P80 BE80B4**	**F202_50.7 P80 BX80B4**	499
30	221	2.6	47.5	6500	**F313_47.5 S2 ME2SB4**	**F313_47.5 S2 MX2SB4**	506	**F313_47.5 P80 BE80B4**	**F313_47.5 P80 BX80B4**	507
31	212	1.9	45.6	4860	**F253_45.6 S2 ME2SB4**	**F253_45.6 S2 MX2SB4**	502	**F253_45.6 P80 BE80B4**	**F253_45.6 P80 BX80B4**	503

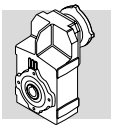

0.75 kW

n_2 min-1	M_2 Nm	S	i	R_{n2} N	IE2	IE3		IE2	IE3	
32	213	1.2	44.8	3420	**F202_44.8 S2 ME2SB4**	**F202_44.8 S2 MX2SB4**	498	**F202_44.8 P80 BE80B4**	**F202_44.8 P80 BX80B4**	499
32	212	2.8	44.6	6500	**F312_44.6 S2 ME2SB4**	**F312_44.6 S2 MX2SB4**	506	**F312_44.6 P80 BE80B4**	**F312_44.6 P80 BX80B4**	507
32	211	1.8	44.4	4890	**F252_44.4 S2 ME2SB4**	**F252_44.4 S2 MX2SB4**	502	**F252_44.4 P80 BE80B4**	**F252_44.4 P80 BX80B4**	503
34	199	1.3	41.8	3370	**F202_41.8 S2 ME2SB4**	**F202_41.8 S2 MX2SB4**	498	**F202_41.8 P80 BE80B4**	**F202_41.8 P80 BX80B4**	499
35	193	1.9	40.7	4790	**F252_40.7 S2 ME2SB4**	**F252_40.7 S2 MX2SB4**	502	**F252_40.7 P80 BE80B4**	**F252_40.7 P80 BX80B4**	503
35	192	3.1	40.4	6500	**F312_40.4 S2 ME2SB4**	**F312_40.4 S2 MX2SB4**	506	**F312_40.4 P80 BE80B4**	**F312_40.4 P80 BX80B4**	507
38	180	1.4	37.9	3300	**F202_37.9 S2 ME2SB4**	**F202_37.9 S2 MX2SB4**	498	**F202_37.9 P80 BE80B4**	**F202_37.9 P80 BX80B4**	499
38	179	3.4	37.7	6500	**F312_37.7 S2 ME2SB4**	**F312_37.7 S2 MX2SB4**	506	**F312_37.7 P80 BE80B4**	**F312_37.7 P80 BX80B4**	507
39	173	2.3	36.4	4680	**F252_36.4 S2 ME2SB4**	**F252_36.4 S2 MX2SB4**	502	**F252_36.4 P80 BE80B4**	**F252_36.4 P80 BX80B4**	503
43	157	1.6	33.1	3200	**F202_33.1 S2 ME2SB4**	**F202_33.1 S2 MX2SB4**	498	**F202_33.1 P80 BE80B4**	**F202_33.1 P80 BX80B4**	499
44	153	2.6	32.2	4540	**F252_32.2 S2 ME2SB4**	**F252_32.2 S2 MX2SB4**	502	**F252_32.2 P80 BE80B4**	**F252_32.2 P80 BX80B4**	503
47	144	1.7	30.4	3140	**F202_30.4 S2 ME2SB4**	**F202_30.4 S2 MX2SB4**	498	**F202_30.4 P80 BE80B4**	**F202_30.4 P80 BX80B4**	499
48	143	2.8	30.0	4470	**F252_30.0 S2 ME2SB4**	**F252_30.0 S2 MX2SB4**	502	**F252_30.0 P80 BE80B4**	**F252_30.0 P80 BX80B4**	503
48	141	1.0	29.6	2550	**F102_29.6 S2 ME2SB4**	**F102_29.6 S2 MX2SB4**	494	**F102_29.6 P80 BE80B4**	**F102_29.6 P80 BX80B4**	495
53	129	3.1	27.2	4360	**F252_27.2 S2 ME2SB4**	**F252_27.2 S2 MX2SB4**	502	**F252_27.2 P80 BE80B4**	**F252_27.2 P80 BX80B4**	503
55	123	1.9	25.9	3020	**F202_25.9 S2 ME2SB4**	**F202_25.9 S2 MX2SB4**	498	**F202_25.9 P80 BE80B4**	**F202_25.9 P80 BX80B4**	499
55	122	1.1	25.8	2470	**F102_25.8 S2 ME2SB4**	**F102_25.8 S2 MX2SB4**	494	**F102_25.8 P80 BE80B4**	**F102_25.8 P80 BX80B4**	495
60	113	3.5	23.8	4210	**F252_23.8 S2 ME2SB4**	**F252_23.8 S2 MX2SB4**	502	**F252_23.8 P80 BE80B4**	**F252_23.8 P80 BX80B4**	503
62	110	2.1	23.1	2930	**F202_23.1 S2 ME2SB4**	**F202_23.1 S2 MX2SB4**	498	**F202_23.1 P80 BE80B4**	**F202_23.1 P80 BX80B4**	499
63	108	1.3	22.8	2400	**F102_22.8 S2 ME2SB4**	**F102_22.8 S2 MX2SB4**	494	**F102_22.8 P80 BE80B4**	**F102_22.8 P80 BX80B4**	495
71	96	2.3	20.2	2830	**F202_20.2 S2 ME2SB4**	**F202_20.2 S2 MX2SB4**	498	**F202_20.2 P80 BE80B4**	**F202_20.2 P80 BX80B4**	499
74	92	1.5	19.3	2310	**F102_19.3 S2 ME2SB4**	**F102_19.3 S2 MX2SB4**	494	**F102_19.3 P80 BE80B4**	**F102_19.3 P80 BX80B4**	495
79	86	2.5	18.1	2740	**F202_18.1 S2 ME2SB4**	**F202_18.1 S2 MX2SB4**	498	**F202_18.1 P80 BE80B4**	**F202_18.1 P80 BX80B4**	499
84	81	1.6	17.0	2230	**F102_17.0 S2 ME2SB4**	**F102_17.0 S2 MX2SB4**	494	**F102_17.0 P80 BE80B4**	**F102_17.0 P80 BX80B4**	495
97	70	2.9	14.8	2600	**F202_14.8 S2 ME2SB4**	**F202_14.8 S2 MX2SB4**	498	**F202_14.8 P80 BE80B4**	**F202_14.8 P80 BX80B4**	499
98	70	1.7	14.6	2150	**F102_14.6 S2 ME2SB4**	**F102_14.6 S2 MX2SB4**	494	**F102_14.6 P80 BE80B4**	**F102_14.6 P80 BX80B4**	495
110	62	1.7	13.0	2070	**F102_13.0 S2 ME2SB4**	**F102_13.0 S2 MX2SB4**	494	**F102_13.0 P80 BE80B4**	**F102_13.0 P80 BX80B4**	495
124	55	1.8	11.5	2010	**F102_11.5 S2 ME2SB4**	**F102_11.5 S2 MX2SB4**	494	**F102_11.5 P80 BE80B4**	**F102_11.5 P80 BX80B4**	495
146	46	1.9	9.8	1920	**F102_9.8 S2 ME2SB4**	**F102_9.8 S2 MX2SB4**	494	**F102_9.8 P80 BE80B4**	**F102_9.8 P80 BX80B4**	495
167	41	2.0	8.6	1850	**F102_8.6 S2 ME2SB4**	**F102_8.6 S2 MX2SB4**	494	**F102_8.6 P80 BE80B4**	**F102_8.6 P80 BX80B4**	495
193	35	2.2	7.4	1770	**F102_7.4 S2 ME2SB4**	**F102_7.4 S2 MX2SB4**	494	**F102_7.4 P80 BE80B4**	**F102_7.4 P80 BX80B4**	495
195	35	2.7	14.6	1770	**F102_14.6 S2 ME2SA2**		494	**F102_14.6 P80 BE80A2**		495
219	31	2.7	13.0	1710	**F102_13.0 S2 ME2SA2**		494	**F102_13.0 P80 BE80A2**		495
247	28	2.8	11.5	1650	**F102_11.5 S2 ME2SA2**		494	**F102_11.5 P80 BE80A2**		495
292	23	3.1	9.8	1570	**F102_9.8 S2 ME2SA2**		494	**F102_9.8 P80 BE80A2**		495
332	20.5	3.2	8.6	1510	**F102_8.6 S2 ME2SA2**		494	**F102_8.6 P80 BE80A2**		495
385	17.7	3.6	7.4	1440	**F102_7.4 S2 ME2SA2**		494	**F102_7.4 P80 BE80A2**		495

0.75 kW

n_2 min-1	M_2 Nm	S	i	R_{n2} N	IE3		IE3	
0.68	9444	1.5	2098.7	55000			**F904_2099 P80 BXN80MB4**	529
0.72	8941	0.9	1986.8	45000			**F804_1987 P80 BXN80MB4**	526
0.74	8718	1.6	1937.3	55000			**F904_1937 P80 BXN80MB4**	529
0.78	8253	1.0	1834.0	45000			**F804_1834 P80 BXN80MB4**	526
0.84	7691	1.0	1709.1	45000			**F804_1709 P80 BXN80MB4**	526
0.84	7660	1.8	1702.3	55000			**F904_1702 P80 BXN80MB4**	529
0.91	7099	1.1	1577.6	45000			**F804_1578 P80 BXN80MB4**	526
0.91	7071	2.0	1571.4	55000			**F904_1571 P80 BXN80MB4**	529
1.0	6426	2.2	1427.9	55000			**F904_1428 P80 BXN80MB4**	529
1.0	6227	1.3	1383.8	45000			**F804_1384 P80 BXN80MB4**	526
1.1	5931	2.4	1318.1	55000			**F904_1318 P80 BXN80MB4**	529
1.1	5748	1.4	1277.3	45000			**F804_1277 P80 BXN80MB4**	526
1.2	5422	2.6	1204.9	55000			**F904_1205 P80 BXN80MB4**	529
1.2	5318	0.9	1181.8	35000			**F704_1182 P80 BXN80MB4**	523

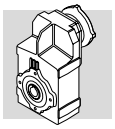

0.75 kW

n_2 min^{-1}	M_2 Nm	S	i	R_{n2} N	IE3		IEC IE3	
1.2	5158	1.6	1146.2	45000			**F804_1146 P80 BXN80MB4**	526
1.3	5005	2.8	1112.3	55000			**F904_1112 P80 BXN80MB4**	529
1.3	4909	1.0	1090.9	35000			**F704_1091 P80 BXN80MB4**	523
1.4	4761	1.7	1058.1	45000			**F804_1058 P80 BXN80MB4**	526
1.5	4437	3.2	986.0	55000			**F904_986.0 P80 BXN80MB4**	529
1.5	4385	1.1	974.4	35000			**F704_974.4 P80 BXN80MB4**	523
1.5	4374	1.8	972.0	45000			**F804_972.0 P80 BXN80MB4**	526
1.6	4096	3.4	910.2	55000			**F904_910.2 P80 BXN80MB4**	529
1.6	4047	1.2	899.4	35000			**F704_899.4 P80 BXN80MB4**	523
1.6	4038	2.0	897.3	45000			**F804_897.3 P80 BXN80MB4**	526
1.7	3700	1.4	822.2	35000			**F704_822.2 P80 BXN80MB4**	523
1.8	3485	2.3	774.4	45000			**F804_774.4 P80 BXN80MB4**	526
1.9	3415	1.5	759.0	35000			**F704_759.0 P80 BXN80MB4**	523
2.0	3217	2.5	714.9	45000			**F804_714.9 P80 BXN80MB4**	526
2.2	2981	1.0	662.4	20000			**F604_662.4 P80 BXN80MB4**	519
2.2	2958	1.7	657.4	35000			**F704_657.4 P80 BXN80MB4**	523
2.3	2751	1.1	611.4	20000			**F604_611.4 P80 BXN80MB4**	519
2.3	2749	2.9	610.9	45000			**F804_610.9 P80 BXN80MB4**	526
2.4	2731	1.8	606.8	35000			**F704_606.8 P80 BXN80MB4**	523
2.5	2537	3.2	563.9	45000			**F804_563.9 P80 BXN80MB4**	526
2.7	2388	1.2	530.7	20000			**F604_530.7 P80 BXN80MB4**	519
2.8	2297	2.2	510.4	35000			**F704_510.4 P80 BXN80MB4**	523
2.9	2204	1.3	489.8	20000			**F604_489.8 P80 BXN80MB4**	519
3.0	2120	2.4	471.2	35000			**F704_471.2 P80 BXN80MB4**	523
3.3	1947	1.5	432.6	20000			**F604_432.6 P80 BXN80MB4**	519
3.3	1931	0.9	429.1	12000			**F514_429.1 P80 BXN80MB4**	515
3.5	1816	2.8	403.5	35000			**F704_403.5 P80 BXN80MB4**	523
3.6	1797	1.6	399.3	20000			**F604_399.3 P80 BXN80MB4**	519
3.8	1676	3.0	372.5	35000			**F704_372.5 P80 BXN80MB4**	523
4.1	1639	1.1	352.5	12000			**F513_352.5 P80 BXN80MB4**	515
4.2	1538	1.9	341.7	20000			**F604_341.7 P80 BXN80MB4**	519
4.5	1475	1.2	317.3	12000			**F513_317.3 P80 BXN80MB4**	515
4.5	1419	2.0	315.4	20000			**F604_315.4 P80 BXN80MB4**	519
4.7	1370	3.7	304.3	35000			**F704_304.3 P80 BXN80MB4**	523
5.0	1330	1.4	285.9	12000			**F513_285.9 P80 BXN80MB4**	515
5.1	1305	2.2	280.7	20000			**F603_280.7 P80 BXN80MB4**	519
5.5	1219	1.5	262.1	12000			**F513_262.1 P80 BXN80MB4**	515
5.5	1205	2.4	259.1	20000			**F603_259.1 P80 BXN80MB4**	519
6.0	1117	1.0	240.1	8500			**F413_240.1 P80 BXN80MB4**	511
6.0	1115	1.6	239.8	12000			**F513_239.8 P80 BXN80MB4**	515
6.1	1096	2.6	235.8	20000			**F603_235.8 P80 BXN80MB4**	519
6.5	1024	1.1	220.1	8500			**F413_220.1 P80 BXN80MB4**	511
6.6	1012	2.9	217.6	20000			**F603_217.6 P80 BXN80MB4**	519
6.6	1008	1.8	216.9	12000			**F513_216.9 P80 BXN80MB4**	515
7.1	941	1.9	202.4	12000			**F513_202.4 P80 BXN80MB4**	515
7.1	936	3.1	201.4	20000			**F603_201.4 P80 BXN80MB4**	519
7.2	925	1.2	198.9	8500			**F413_198.9 P80 BXN80MB4**	511
7.7	864	3.4	185.9	20000			**F603_185.9 P80 BXN80MB4**	519
7.9	840	1.3	180.7	8500			**F413_180.7 P80 BXN80MB4**	511
8.5	784	1.4	168.7	8500			**F413_168.7 P80 BXN80MB4**	511
8.6	770	2.3	165.6	12000			**F513_165.6 P80 BXN80MB4**	515
8.8	757	3.8	162.9	20000			**F603_162.9 P80 BXN80MB4**	519
10.2	654	0.9	140.7	6500			**F313_140.7 P80 BXN80MB4**	507
10.6	625	1.8	134.4	8500			**F413_134.4 P80 BXN80MB4**	511
11.0	604	3.0	129.9	12000			**F513_129.9 P80 BXN80MB4**	515
11.1	597	1.0	128.4	6500			**F313_128.4 P80 BXN80MB4**	507
12.7	523	1.1	112.5	6500			**F313_112.5 P80 BXN80MB4**	507

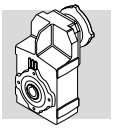

0.75 kW

n_2 min^{-1}	M_2 Nm	S	i	R_{n2} N	 IE3		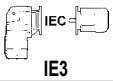 IEC IE3	
13.5	493	2.2	106.0	8500			**F413_106.0 P80 BXN80MB4**	511
14.0	474	1.3	101.9	6500			**F313_101.9 P80 BXN80MB4**	507
15.0	444	0.9	95.5	5450			**F253_95.5 P80 BXN80MB4**	503
16.4	406	1.5	87.4	6500			**F313_87.4 P80 BXN80MB4**	507
16.8	395	2.8	84.9	8500			**F413_84.9 P80 BXN80MB4**	511
17.1	388	1.0	83.4	5350	**F253_83.4 SX20 MXN20MB4**	502	**F253_83.4 P80 BXN80MB4**	503
18.1	367	1.6	78.9	6500			**F313_78.9 P80 BXN80MB4**	507
18.7	356	1.1	76.6	5300	**F253_76.6 SX20 MXN20MB4**	502	**F253_76.6 P80 BXN80MB4**	503
20.7	321	1.9	69.1	6500			**F313_69.1 P80 BXN80MB4**	507
21.5	309	3.6	66.5	8500			**F413_66.5 P80 BXN80MB4**	511
21.9	304	1.3	65.3	5180	**F253_65.3 SX20 MXN20MB4**	502	**F253_65.3 P80 BXN80MB4**	503
22.8	292	2.1	62.8	6500			**F313_62.8 P80 BXN80MB4**	507
24.5	271	1.5	58.3	5080	**F253_58.3 SX20 MXN20MB4**	502	**F253_58.3 P80 BXN80MB4**	503
25.2	269	0.9	56.7	3590	**F202_56.7 SX20 MXN20MB4**	498	**F202_56.7 P80 BXN80MB4**	499
27.5	242	2.5	52.1	6500			**F313_52.1 P80 BXN80MB4**	507
28.2	236	1.7	50.8	4960	**F253_50.8 SX20 MXN20MB4**	502	**F253_50.8 P80 BXN80MB4**	503
28.2	241	1.0	50.7	3510	**F202_50.7 SX20 MXN20MB4**	498	**F202_50.7 P80 BXN80MB4**	499
30	221	2.6	47.5	6500			**F313_47.5 P80 BXN80MB4**	507
31	212	1.9	45.6	4860	**F253_45.6 SX20 MXN20MB4**	502	**F253_45.6 P80 BXN80MB4**	503
32	213	1.2	44.8	3420	**F202_44.8 SX20 MXN20MB4**	498	**F202_44.8 P80 BXN80MB4**	499
32	212	2.8	44.6	6500			**F312_44.6 P80 BXN80MB4**	507
32	211	1.8	44.4	4890	**F252_44.4 SX20 MXN20MB4**	502	**F252_44.4 P80 BXN80MB4**	503
34	199	1.3	41.8	3370	**F202_41.8 SX20 MXN20MB4**	498	**F202_41.8 P80 BXN80MB4**	499
35	193	1.9	40.7	4790	**F252_40.7 SX20 MXN20MB4**	502	**F252_40.7 P80 BXN80MB4**	503
35	192	3.1	40.4	6500			**F312_40.4 P80 BXN80MB4**	507
38	180	1.4	37.9	3300	**F202_37.9 SX20 MXN20MB4**	498	**F202_37.9 P80 BXN80MB4**	499
38	179	3.4	37.7	6500			**F312_37.7 P80 BXN80MB4**	507
39	173	2.3	36.4	4680	**F252_36.4 SX20 MXN20MB4**	502	**F252_36.4 P80 BXN80MB4**	503
43	157	1.6	33.1	3200	**F202_33.1 SX20 MXN20MB4**	498	**F202_33.1 P80 BXN80MB4**	499
44	153	2.6	32.2	4540	**F252_32.2 SX20 MXN20MB4**	502	**F252_32.2 P80 BXN80MB4**	503
47	144	1.7	30.4	3140	**F202_30.4 SX20 MXN20MB4**	498	**F202_30.4 P80 BXN80MB4**	499
48	143	2.8	30.0	4470	**F252_30.0 SX20 MXN20MB4**	502	**F252_30.0 P80 BXN80MB4**	503
48	141	1.0	29.6	2550	**F102_29.6 SX20 MXN20MB4**	494	**F102_29.6 P80 BXN80MB4**	495
53	129	3.1	27.2	4360	**F252_27.2 SX20 MXN20MB4**	502	**F252_27.2 P80 BXN80MB4**	503
55	123	1.9	25.9	3020	**F202_25.9 SX20 MXN20MB4**	498	**F202_25.9 P80 BXN80MB4**	499
55	122	1.1	25.8	2470	**F102_25.8 SX20 MXN20MB4**	494	**F102_25.8 P80 BXN80MB4**	495
60	113	3.5	23.8	4210	**F252_23.8 SX20 MXN20MB4**	502	**F252_23.8 P80 BXN80MB4**	503
62	110	2.1	23.1	2930	**F202_23.1 SX20 MXN20MB4**	498	**F202_23.1 P80 BXN80MB4**	499
63	108	1.3	22.8	2400	**F102_22.8 SX20 MXN20MB4**	494	**F102_22.8 P80 BXN80MB4**	495
71	96	2.3	20.2	2830	**F202_20.2 SX20 MXN20MB4**	498	**F202_20.2 P80 BXN80MB4**	499
74	92	1.5	19.3	2310	**F102_19.3 SX20 MXN20MB4**	494	**F102_19.3 P80 BXN80MB4**	495
79	86	2.5	18.1	2740	**F202_18.1 SX20 MXN20MB4**	498	**F202_18.1 P80 BXN80MB4**	499
84	81	1.6	17.0	2230	**F102_17.0 SX20 MXN20MB4**	494	**F102_17.0 P80 BXN80MB4**	495
97	70	2.9	14.8	2600	**F202_14.8 SX20 MXN20MB4**	498	**F202_14.8 P80 BXN80MB4**	499
98	70	1.7	14.6	2150	**F102_14.6 SX20 MXN20MB4**	494	**F102_14.6 P80 BXN80MB4**	495
110	62	1.7	13.0	2070	**F102_13.0 SX20 MXN20MB4**	494	**F102_13.0 P80 BXN80MB4**	495
124	55	1.8	11.5	2010	**F102_11.5 SX20 MXN20MB4**	494	**F102_11.5 P80 BXN80MB4**	495
146	46	1.9	9.8	1920	**F102_9.8 SX20 MXN20MB4**	494	**F102_9.8 P80 BXN80MB4**	495
167	41	2.0	8.6	1850	**F102_8.6 SX20 MXN20MB4**	494	**F102_8.6 P80 BXN80MB4**	495
193	35	2.2	7.4	1770	**F102_7.4 SX20 MXN20MB4**	494	**F102_7.4 P80 BXN80MB4**	495

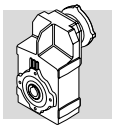

1.1 kW

n_2 min-1	M_2 Nm	S	i	R_{n2} N	IE2	IE3		IE2	IEC IE3	
0.60	15694	0.9	1571.4	55000	**F904_1571 S3 ME3LA6**		528	**F904_1571 P100 BE100M6**		529
0.66	14285	1.0	1427.9	55000	**F904_1428 S3 ME3LA6**		528	**F904_1428 P100 BE100M6**		529
0.68	13977	1.0	2098.7	55000	**F904_2099 S3 ME3SA4**	**F904_2099 S3 MX3SA4**	528	**F904_2099 P90 BE90S4**	**F904_2099 P90 BX90S4**	529
0.74	12902	1.1	1937.3	55000	**F904_1937 S3 ME3SA4**	**F904_1937 S3 MX3SA4**	528	**F904_1937 P90 BE90S4**	**F904_1937 P90 BX90S4**	529
0.84	11337	1.2	1702.3	55000	**F904_1702 S3 ME3SA4**	**F904_1702 S3 MX3SA4**	528	**F904_1702 P90 BE90S4**	**F904_1702 P90 BX90S4**	529
0.91	10465	1.3	1571.4	55000	**F904_1571 S3 ME3SA4**	**F904_1571 S3 MX3SA4**	528	**F904_1571 P90 BE90S4**	**F904_1571 P90 BX90S4**	529
1.0	9510	1.5	1427.9	55000	**F904_1428 S3 ME3SA4**	**F904_1428 S3 MX3SA4**	528	**F904_1428 P90 BE90S4**	**F904_1428 P90 BX90S4**	529
1.1	8778	1.6	1318.1	55000	**F904_1318 S3 ME3SA4**	**F904_1318 S3 MX3SA4**	528	**F904_1318 P90 BE90S4**	**F904_1318 P90 BX90S4**	529
1.1	8507	0.9	1277.3	45000	**F804_1277 S3 ME3SA4**	**F804_1277 S3 MX3SA4**	525	**F804_1277 P90 BE90S4**	**F804_1277 P90 BX90S4**	526
1.2	8025	1.7	1204.9	55000	**F904_1205 S3 ME3SA4**	**F904_1205 S3 MX3SA4**	528	**F904_1205 P90 BE90S4**	**F904_1205 P90 BX90S4**	529
1.2	7634	1.0	1146.2	45000	**F804_1146 S3 ME3SA4**	**F804_1146 S3 MX3SA4**	525	**F804_1146 P90 BE90S4**	**F804_1146 P90 BX90S4**	526
1.3	7408	1.9	1112.3	55000	**F904_1112 S3 ME3SA4**	**F904_1112 S3 MX3SA4**	528	**F904_1112 P90 BE90S4**	**F904_1112 P90 BX90S4**	529
1.4	7047	1.1	1058.1	45000	**F804_1058 S3 ME3SA4**	**F804_1058 S3 MX3SA4**	525	**F804_1058 P90 BE90S4**	**F804_1058 P90 BX90S4**	526
1.5	6567	2.1	986.0	55000	**F904_986.0 S3 ME3SA4**	**F904_986.0 S3 MX3SA4**	528	**F904_986.0 P90 BE90S4**	**F904_986.0 P90 BX90S4**	529
1.5	6474	1.2	972.0	45000	**F804_972.0 S3 ME3SA4**	**F804_972.0 S3 MX3SA4**	525	**F804_972.0 P90 BE90S4**	**F804_972.0 P90 BX90S4**	526
1.6	6062	2.3	910.2	55000	**F904_910.2 S3 ME3SA4**	**F904_910.2 S3 MX3SA4**	528	**F904_910.2 P90 BE90S4**	**F904_910.2 P90 BX90S4**	529
1.6	5976	1.3	897.3	45000	**F804_897.3 S3 ME3SA4**	**F804_897.3 S3 MX3SA4**	525	**F804_897.3 P90 BE90S4**	**F804_897.3 P90 BX90S4**	526
1.7	5476	0.9	822.2	35000	**F704_822.2 S3 ME3SA4**	**F704_822.2 S3 MX3SA4**	522	**F704_822.2 P90 BE90S4**	**F704_822.2 P90 BX90S4**	523
1.8	5158	1.6	774.4	45000	**F804_774.4 S3 ME3SA4**	**F804_774.4 S3 MX3SA4**	525	**F804_774.4 P90 BE90S4**	**F804_774.4 P90 BX90S4**	526
1.8	5151	2.7	773.4	55000	**F904_773.4 S3 ME3SA4**	**F904_773.4 S3 MX3SA4**	528	**F904_773.4 P90 BE90S4**	**F904_773.4 P90 BX90S4**	529
1.9	5055	1.0	759.0	35000	**F704_759.0 S3 ME3SA4**	**F704_759.0 S3 MX3SA4**	522	**F704_759.0 P90 BE90S4**	**F704_759.0 P90 BX90S4**	523
1.9	4893	1.6	489.1	45000	**F804_489.1 S3 ME3LA6**		525	**F804_489.1 P100 BE100M6**		526
2.0	4761	1.7	714.9	45000	**F804_714.9 S3 ME3SA4**	**F804_714.9 S3 MX3SA4**	525	**F804_714.9 P90 BE90S4**	**F804_714.9 P90 BX90S4**	526
2.0	4755	2.9	714.0	55000	**F904_714.0 S3 ME3SA4**	**F904_714.0 S3 MX3SA4**	528	**F904_714.0 P90 BE90S4**	**F904_714.0 P90 BX90S4**	529
2.1	4517	1.8	451.5	45000	**F804_451.5 S3 ME3LA6**		525	**F804_451.5 P100 BE100M6**		526
2.2	4378	1.1	657.4	35000	**F704_657.4 S3 ME3SA4**	**F704_657.4 S3 MX3SA4**	522	**F704_657.4 P90 BE90S4**	**F704_657.4 P90 BX90S4**	523
2.3	4167	3.4	625.6	55000	**F904_625.6 S3 ME3SA4**	**F904_625.6 S3 MX3SA4**	528	**F904_625.6 P90 BE90S4**	**F904_625.6 P90 BX90S4**	529
2.3	4068	2.0	610.9	45000	**F804_610.9 S3 ME3SA4**	**F804_610.9 S3 MX3SA4**	525	**F804_610.9 P90 BE90S4**	**F804_610.9 P90 BX90S4**	526
2.4	4042	1.2	606.8	35000	**F704_606.8 S3 ME3SA4**	**F704_606.8 S3 MX3SA4**	522	**F704_606.8 P90 BE90S4**	**F704_606.8 P90 BX90S4**	523
2.5	3846	3.6	577.5	55000	**F904_577.5 S3 ME3SA4**	**F904_577.5 S3 MX3SA4**	528	**F904_577.5 P90 BE90S4**	**F904_577.5 P90 BX90S4**	529
2.5	3755	2.1	563.9	45000	**F804_563.9 S3 ME3SA4**	**F804_563.9 S3 MX3SA4**	525	**F804_563.9 P90 BE90S4**	**F804_563.9 P90 BX90S4**	526
2.8	3399	1.5	510.4	35000	**F704_510.4 S3 ME3SA4**	**F704_510.4 S3 MX3SA4**	522	**F704_510.4 P90 BE90S4**	**F704_510.4 P90 BX90S4**	523
2.9	3262	0.9	489.8	20000	**F604_489.8 S3 ME3SA4**	**F604_489.8 S3 MX3SA4**	518	**F604_489.8 P90 BE90S4**	**F604_489.8 P90 BX90S4**	519
2.9	3258	2.5	489.1	45000	**F804_489.1 S3 ME3SA4**	**F804_489.1 S3 MX3SA4**	525	**F804_489.1 P90 BE90S4**	**F804_489.1 P90 BX90S4**	526
3.0	3138	1.6	471.2	35000	**F704_471.2 S3 ME3SA4**	**F704_471.2 S3 MX3SA4**	522	**F704_471.2 P90 BE90S4**	**F704_471.2 P90 BX90S4**	523
3.2	3007	2.7	451.5	45000	**F804_451.5 S3 ME3SA4**	**F804_451.5 S3 MX3SA4**	525	**F804_451.5 P90 BE90S4**	**F804_451.5 P90 BX90S4**	526
3.3	2881	1.0	432.6	20000	**F604_432.6 S3 ME3SA4**	**F604_432.6 S3 MX3SA4**	518	**F604_432.6 P90 BE90S4**	**F604_432.6 P90 BX90S4**	519
3.5	2687	1.9	403.5	35000	**F704_403.5 S3 ME3SA4**	**F704_403.5 S3 MX3SA4**	522	**F704_403.5 P90 BE90S4**	**F704_403.5 P90 BX90S4**	523
3.6	2660	1.1	399.3	20000	**F604_399.3 S3 ME3SA4**	**F604_399.3 S3 MX3SA4**	518	**F604_399.3 P90 BE90S4**	**F604_399.3 P90 BX90S4**	519
3.7	2552	3.1	383.2	45000	**F804_383.2 S3 ME3SA4**	**F804_383.2 S3 MX3SA4**	525	**F804_383.2 P90 BE90S4**	**F804_383.2 P90 BX90S4**	526
3.8	2481	2.0	372.5	35000	**F704_372.5 S3 ME3SA4**	**F704_372.5 S3 MX3SA4**	522	**F704_372.5 P90 BE90S4**	**F704_372.5 P90 BX90S4**	523
4.0	2356	3.4	353.7	45000	**F804_353.7 S3 ME3SA4**	**F804_353.7 S3 MX3SA4**	525	**F804_353.7 P90 BE90S4**	**F804_353.7 P90 BX90S4**	526
4.2	2276	1.3	341.7	20000	**F604_341.7 S3 ME3SA4**	**F604_341.7 S3 MX3SA4**	518	**F604_341.7 P90 BE90S4**	**F604_341.7 P90 BX90S4**	519
4.5	2100	1.4	315.4	20000	**F604_315.4 S3 ME3SA4**	**F604_315.4 S3 MX3SA4**	518	**F604_315.4 P90 BE90S4**	**F604_315.4 P90 BX90S4**	519
4.7	2027	2.5	304.3	35000	**F704_304.3 S3 ME3SA4**	**F704_304.3 S3 MX3SA4**	522	**F704_304.3 P90 BE90S4**	**F704_304.3 P90 BX90S4**	523
5.0	1968	0.9	285.9	12000	**F513_285.9 S3 ME3SA4**	**F513_285.9 S3 MX3SA4**	514	**F513_285.9 P90 BE90S4**	**F513_285.9 P90 BX90S4**	515
5.1	1871	2.7	280.9	35000	**F704_280.9 S3 ME3SA4**	**F704_280.9 S3 MX3SA4**	522	**F704_280.9 P90 BE90S4**	**F704_280.9 P90 BX90S4**	523
5.1	1932	1.5	280.7	20000	**F603_280.7 S3 ME3SA4**	**F603_280.7 S3 MX3SA4**	518	**F603_280.7 P90 BE90S4**	**F603_280.7 P90 BX90S4**	519
5.5	1804	1.0	262.1	12000	**F513_262.1 S3 ME3SA4**	**F513_262.1 S3 MX3SA4**	514	**F513_262.1 P90 BE90S4**	**F513_262.1 P90 BX90S4**	515
5.5	1783	1.6	259.1	20000	**F603_259.1 S3 ME3SA4**	**F603_259.1 S3 MX3SA4**	518	**F603_259.1 P90 BE90S4**	**F603_259.1 P90 BX90S4**	519
6.0	1651	1.1	239.8	12000	**F513_239.8 S3 ME3SA4**	**F513_239.8 S3 MX3SA4**	514	**F513_239.8 P90 BE90S4**	**F513_239.8 P90 BX90S4**	515
6.1	1623	1.8	235.8	20000	**F603_235.8 S3 ME3SA4**	**F603_235.8 S3 MX3SA4**	518	**F603_235.8 P90 BE90S4**	**F603_235.8 P90 BX90S4**	519
6.1	1562	3.2	234.6	35000	**F704_234.6 S3 ME3SA4**	**F704_234.6 S3 MX3SA4**	522	**F704_234.6 P90 BE90S4**	**F704_234.6 P90 BX90S4**	523
6.6	1498	1.9	217.6	20000	**F603_217.6 S3 ME3SA4**	**F603_217.6 S3 MX3SA4**	518	**F603_217.6 P90 BE90S4**	**F603_217.6 P90 BX90S4**	519
6.6	1492	1.2	216.9	12000	**F513_216.9 S3 ME3SA4**	**F513_216.9 S3 MX3SA4**	514	**F513_216.9 P90 BE90S4**	**F513_216.9 P90 BX90S4**	515
6.6	1442	3.5	216.5	35000	**F704_216.5 S3 ME3SA4**	**F704_216.5 S3 MX3SA4**	522	**F704_216.5 P90 BE90S4**	**F704_216.5 P90 BX90S4**	523
7.1	1393	1.3	202.4	12000	**F513_202.4 S3 ME3SA4**	**F513_202.4 S3 MX3SA4**	514	**F513_202.4 P90 BE90S4**	**F513_202.4 P90 BX90S4**	515

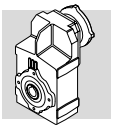

1.1 kW

n_2 min-1	M_2 Nm	S	i	R_{n2} N	IE2	IE3		IE2	IE3	
7.1	1386	2.1	201.4	20000	**F603_201.4 S3 ME3SA4**	**F603_201.4 S3 MX3SA4**	518	**F603_201.4 P90 BE90S4**	**F603_201.4 P90 BX90S4**	519
7.7	1279	2.3	185.9	20000	**F603_185.9 S3 ME3SA4**	**F603_185.9 S3 MX3SA4**	518	**F603_185.9 P90 BE90S4**	**F603_185.9 P90 BX90S4**	519
7.9	1244	0.9	180.7	8500	**F413_180.7 S3 ME3SA4**	**F413_180.7 S3 MX3SA4**	510	**F413_180.7 P90 BE90S4**	**F413_180.7 P90 BX90S4**	511
8.5	1161	0.9	168.7	8500	**F413_168.7 S3 ME3SA4**	**F413_168.7 S3 MX3SA4**	510	**F413_168.7 P90 BE90S4**	**F413_168.7 P90 BX90S4**	511
8.6	1140	1.6	165.6	12000	**F513_165.6 S3 ME3SA4**	**F513_165.6 S3 MX3SA4**	514	**F513_165.6 P90 BE90S4**	**F513_165.6 P90 BX90S4**	515
8.8	1121	2.6	162.9	20000	**F603_162.9 S3 ME3SA4**	**F603_162.9 S3 MX3SA4**	518	**F603_162.9 P90 BE90S4**	**F603_162.9 P90 BX90S4**	519
9.5	1035	2.8	150.4	20000	**F603_150.4 S3 ME3SA4**	**F603_150.4 S3 MX3SA4**	518	**F603_150.4 P90 BE90S4**	**F603_150.4 P90 BX90S4**	519
10.6	925	1.2	134.4	8500	**F413_134.4 S3 ME3SA4**	**F413_134.4 S3 MX3SA4**	510	**F413_134.4 P90 BE90S4**	**F413_134.4 P90 BX90S4**	511
11.0	894	2.0	129.9	12000	**F513_129.9 S3 ME3SA4**	**F513_129.9 S3 MX3SA4**	514	**F513_129.9 P90 BE90S4**	**F513_129.9 P90 BX90S4**	515
13.5	730	1.5	106.0	8500	**F413_106.0 S3 ME3SA4**	**F413_106.0 S3 MX3SA4**	510	**F413_106.0 P90 BE90S4**	**F413_106.0 P90 BX90S4**	511
13.6	723	2.5	105.1	12000	**F513_105.1 S3 ME3SA4**	**F513_105.1 S3 MX3SA4**	514	**F513_105.1 P90 BE90S4**	**F513_105.1 P90 BX90S4**	515
16.4	601	1.0	87.4	6500	**F313_87.4 S3 ME3SA4**	**F313_87.4 S3 MX3SA4**	506	**F313_87.4 P90 BE90S4**	**F313_87.4 P90 BX90S4**	507
16.8	584	1.9	84.9	8500	**F413_84.9 S3 ME3SA4**	**F413_84.9 S3 MX3SA4**	510	**F413_84.9 P90 BE90S4**	**F413_84.9 P90 BX90S4**	511
17.2	573	3.1	83.2	12000	**F513_83.2 S3 ME3SA4**	**F513_83.2 S3 MX3SA4**	514	**F513_83.2 P90 BE90S4**	**F513_83.2 P90 BX90S4**	515
18.1	543	1.1	78.9	6500	**F313_78.9 S3 ME3SA4**	**F313_78.9 S3 MX3SA4**	506	**F313_78.9 P90 BE90S4**	**F313_78.9 P90 BX90S4**	507
20.7	475	1.3	69.1	6500	**F313_69.1 S3 ME3SA4**	**F313_69.1 S3 MX3SA4**	506	**F313_69.1 P90 BE90S4**	**F313_69.1 P90 BX90S4**	507
21.5	458	2.4	66.5	8500	**F413_66.5 S3 ME3SA4**	**F413_66.5 S3 MX3SA4**	510	**F413_66.5 P90 BE90S4**	**F413_66.5 P90 BX90S4**	511
21.9	450	0.9	65.3	4610	**F253_65.3 S3 ME3SA4**	**F253_65.3 S3 MX3SA4**	502	**F253_65.3 P90 BE90S4**	**F253_65.3 P90 BX90S4**	503
22.8	432	1.4	62.8	6500	**F313_62.8 S3 ME3SA4**	**F313_62.8 S3 MX3SA4**	506	**F313_62.8 P90 BE90S4**	**F313_62.8 P90 BX90S4**	507
23.7	415	2.7	60.2	8500	**F413_60.2 S3 ME3SA4**	**F413_60.2 S3 MX3SA4**	510	**F413_60.2 P90 BE90S4**	**F413_60.2 P90 BX90S4**	511
24.5	401	1.0	58.3	4500	**F253_58.3 S3 ME3SA4**	**F253_58.3 S3 MX3SA4**	502	**F253_58.3 P90 BE90S4**	**F253_58.3 P90 BX90S4**	503
27.5	359	1.7	52.1	6500	**F313_52.1 S3 ME3SA4**	**F313_52.1 S3 MX3SA4**	506	**F313_52.1 P90 BE90S4**	**F313_52.1 P90 BX90S4**	507
27.8	354	3.1	51.5	8500	**F413_51.5 S3 ME3SA4**	**F413_51.5 S3 MX3SA4**	510	**F413_51.5 P90 BE90S4**	**F413_51.5 P90 BX90S4**	511
28.2	350	1.1	50.8	4450	**F253_50.8 S3 ME3SA4**	**F253_50.8 S3 MX3SA4**	502	**F253_50.8 P90 BE90S4**	**F253_50.8 P90 BX90S4**	503
29.8	337	3.2	47.9	8500	**F412_47.9 S3 ME3SA4**	**F412_47.9 S3 MX3SA4**	510	**F412_47.9 P90 BE90S4**	**F412_47.9 P90 BX90S4**	511
30	327	1.8	47.5	6500	**F313_47.5 S3 ME3SA4**	**F313_47.5 S3 MX3SA4**	506	**F313_47.5 P90 BE90S4**	**F313_47.5 P90 BX90S4**	507
31	314	1.3	45.6	4400	**F253_45.6 S3 ME3SA4**	**F253_45.6 S3 MX3SA4**	502	**F253_45.6 P90 BE90S4**	**F253_45.6 P90 BX90S4**	503
32	314	1.9	44.6	6500	**F312_44.6 S3 ME3SA4**	**F312_44.6 S3 MX3SA4**	506	**F312_44.6 P90 BE90S4**	**F312_44.6 P90 BX90S4**	507
32	312	1.2	44.4	4470	**F252_44.4 S3 ME3SA4**	**F252_44.4 S3 MX3SA4**	502	**F252_44.4 P90 BE90S4**	**F252_44.4 P90 BX90S4**	503
35	286	1.3	40.7	4410	**F252_40.7 S3 ME3SA4**	**F252_40.7 S3 MX3SA4**	502	**F252_40.7 P90 BE90S4**	**F252_40.7 P90 BX90S4**	503
35	284	2.1	40.4	6500	**F312_40.4 S3 ME3SA4**	**F312_40.4 S3 MX3SA4**	506	**F312_40.4 P90 BE90S4**	**F312_40.4 P90 BX90S4**	507
38	266	0.9	37.9	3050	**F202_37.9 S3 ME3SA4**	**F202_37.9 S3 MX3SA4**	498	**F202_37.9 P90 BE90S4**	**F202_37.9 P90 BX90S4**	499
38	265	2.3	37.7	6500	**F312_37.7 S3 ME3SA4**	**F312_37.7 S3 MX3SA4**	506	**F312_37.7 P90 BE90S4**	**F312_37.7 P90 BX90S4**	507
39	256	1.6	36.4	4330	**F252_36.4 S3 ME3SA4**	**F252_36.4 S3 MX3SA4**	502	**F252_36.4 P90 BE90S4**	**F252_36.4 P90 BX90S4**	503
42	242	2.5	34.4	6500	**F312_34.4 S3 ME3SA4**	**F312_34.4 S3 MX3SA4**	506	**F312_34.4 P90 BE90S4**	**F312_34.4 P90 BX90S4**	507
43	233	1.1	33.1	2980	**F202_33.1 S3 ME3SA4**	**F202_33.1 S3 MX3SA4**	498	**F202_33.1 P90 BE90S4**	**F202_33.1 P90 BX90S4**	499
44	226	1.8	32.2	4240	**F252_32.2 S3 ME3SA4**	**F252_32.2 S3 MX3SA4**	502	**F252_32.2 P90 BE90S4**	**F252_32.2 P90 BX90S4**	503
47	214	1.2	30.4	2930	**F202_30.4 S3 ME3SA4**	**F202_30.4 S3 MX3SA4**	498	**F202_30.4 P90 BE90S4**	**F202_30.4 P90 BX90S4**	499
47	212	2.8	30.1	6500	**F312_30.1 S3 ME3SA4**	**F312_30.1 S3 MX3SA4**	506	**F312_30.1 P90 BE90S4**	**F312_30.1 P90 BX90S4**	507
48	211	1.9	30.0	4190	**F252_30.0 S3 ME3SA4**	**F252_30.0 S3 MX3SA4**	502	**F252_30.0 P90 BE90S4**	**F252_30.0 P90 BX90S4**	503
52	192	3.1	27.3	6500	**F312_27.3 S3 ME3SA4**	**F312_27.3 S3 MX3SA4**	506	**F312_27.3 P90 BE90S4**	**F312_27.3 P90 BX90S4**	507
53	191	2.1	27.2	4100	**F252_27.2 S3 ME3SA4**	**F252_27.2 S3 MX3SA4**	502	**F252_27.2 P90 BE90S4**	**F252_27.2 P90 BX90S4**	503
55	182	1.3	25.9	2840	**F202_25.9 S3 ME3SA4**	**F202_25.9 S3 MX3SA4**	498	**F202_25.9 P90 BE90S4**	**F202_25.9 P90 BX90S4**	499
60	167	2.4	23.8	3990	**F252_23.8 S3 ME3SA4**	**F252_23.8 S3 MX3SA4**	502	**F252_23.8 P90 BE90S4**	**F252_23.8 P90 BX90S4**	503
62	163	1.4	23.1	2780	**F202_23.1 S3 ME3SA4**	**F202_23.1 S3 MX3SA4**	498	**F202_23.1 P90 BE90S4**	**F202_23.1 P90 BX90S4**	499
66	153	2.6	21.8	3920	**F252_21.8 S3 ME3SA4**	**F252_21.8 S3 MX3SA4**	502	**F252_21.8 P90 BE90S4**	**F252_21.8 P90 BX90S4**	503
71	142	1.6	20.2	2690	**F202_20.2 S3 ME3SA4**	**F202_20.2 S3 MX3SA4**	498	**F202_20.2 P90 BE90S4**	**F202_20.2 P90 BX90S4**	499
74	136	1.0	19.3	2170	**F102_19.3 S3 ME3SA4**	**F102_19.3 S3 MX3SA4**	494	**F102_19.3 P90 BE90S4**	**F102_19.3 P90 BX90S4**	495
77	131	3.1	18.6	3780	**F252_18.6 S3 ME3SA4**	**F252_18.6 S3 MX3SA4**	502	**F252_18.6 P90 BE90S4**	**F252_18.6 P90 BX90S4**	503
79	127	1.7	18.1	2620	**F202_18.1 S3 ME3SA4**	**F202_18.1 S3 MX3SA4**	498	**F202_18.1 P90 BE90S4**	**F202_18.1 P90 BX90S4**	499
84	119	1.1	17.0	2110	**F102_17.0 S3 ME3SA4**	**F102_17.0 S3 MX3SA4**	494	**F102_17.0 P90 BE90S4**	**F102_17.0 P90 BX90S4**	495
86	117	3.4	16.6	3670	**F252_16.6 S3 ME3SA4**	**F252_16.6 S3 MX3SA4**	502	**F252_16.6 P90 BE90S4**	**F252_16.6 P90 BX90S4**	503
97	104	2.0	14.8	2500	**F202_14.8 S3 ME3SA4**	**F202_14.8 S3 MX3SA4**	498	**F202_14.8 P90 BE90S4**	**F202_14.8 P90 BX90S4**	499
98	103	1.2	14.6	2050	**F102_14.6 S3 ME3SA4**	**F102_14.6 S3 MX3SA4**	494	**F102_14.6 P90 BE90S4**	**F102_14.6 P90 BX90S4**	495
110	92	1.1	13.0	1980	**F102_13.0 S3 ME3SA4**	**F102_13.0 S3 MX3SA4**	494	**F102_13.0 P90 BE90S4**	**F102_13.0 P90 BX90S4**	495
124	81	1.2	11.5	1920	**F102_11.5 S3 ME3SA4**	**F102_11.5 S3 MX3SA4**	494	**F102_11.5 P90 BE90S4**	**F102_11.5 P90 BX90S4**	495
127	79	2.2	11.2	2310	**F202_11.2 S3 ME3SA4**	**F202_11.2 S3 MX3SA4**	498	**F202_11.2 P90 BE90S4**	**F202_11.2 P90 BX90S4**	499

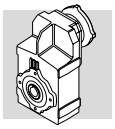

1.1 kW

n_2 min-1	M_2 Nm	S	i	R_{n2} N	IE2	IE3		IEC IE2	IEC IE3	
143	71	2.3	10.0	2200	**F202_10.0 S3 ME3SA4**	**F202_10.0 S3 MX3SA4**	498	**F202_10.0 P90 BE90S4**	**F202_10.0 P90 BX90S4**	499
146	69	1.3	9.8	1840	**F102_9.8 S3 ME3SA4**	**F102_9.8 S3 MX3SA4**	494	**F102_9.8 P90 BE90S4**	**F102_9.8 P90 BX90S4**	495
164	61	2.5	8.7	2160	**F202_8.7 S3 ME3SA4**	**F202_8.7 S3 MX3SA4**	498	**F202_8.7 P90 BE90S4**	**F202_8.7 P90 BX90S4**	499
167	60	1.4	8.6	1780	**F102_8.6 S3 ME3SA4**	**F102_8.6 S3 MX3SA4**	494	**F102_8.6 P90 BE90S4**	**F102_8.6 P90 BX90S4**	495
183	55	2.6	7.8	2100	**F202_7.8 S3 ME3SA4**	**F202_7.8 S3 MX3SA4**	498	**F202_7.8 P90 BE90S4**	**F202_7.8 P90 BX90S4**	499
193	52	1.5	7.4	1720	**F102_7.4 S3 ME3SA4**	**F102_7.4 S3 MX3SA4**	494	**F102_7.4 P90 BE90S4**	**F102_7.4 P90 BX90S4**	495
223	45	2.9	6.4	1980	**F202_6.4 S3 ME3SA4**	**F202_6.4 S3 MX3SA4**	498	**F202_6.4 P90 BE90S4**	**F202_6.4 P90 BX90S4**	499
245	41	1.9	11.5	1600	**F102_11.5S2ME2SB2**		494	**F102_11.5 P80 BE80B2**		495
252	40	3.6	11.2	1910	**F202_11.2S2ME2SB2**		498	**F202_11.2 P80 BE80B2**		499
290	34	2.1	9.8	1530	**F102_9.8S2ME2SB2**		494	**F102_9.8 P80 BE80B2**		495
330	30	2.2	8.6	1480	**F102_8.6S2ME2SB2**		494	**F102_8.6 P80 BE80B2**		495
382	26	2.4	7.4	1410	**F102_7.4S2ME2SB2**		494	**F102_7.4 P80 BE80B2**		495

1.1 kW

n_2 min-1	M_2 Nm	S	i	R_{n2} N	IE3		IEC IE3	
0.68	13977	1.0	2098.7	55000			**F904_2099 P90 BXN90S4**	529
0.74	12902	1.1	1937.3	55000			**F904_1937 P90 BXN90S4**	529
0.84	11337	1.2	1702.3	55000			**F904_1702 P90 BXN90S4**	529
0.91	10465	1.3	1571.4	55000			**F904_1571 P90 BXN90S4**	529
1.0	9510	1.5	1427.9	55000			**F904_1428 P90 BXN90S4**	529
1.1	8778	1.6	1318.1	55000			**F904_1318 P90 BXN90S4**	529
1.1	8507	0.9	1277.3	45000			**F804_1277 P90 BXN90S4**	526
1.2	8025	1.7	1204.9	55000			**F904_1205 P90 BXN90S4**	529
1.2	7634	1.0	1146.2	45000			**F804_1146 P90 BXN90S4**	526
1.3	7408	1.9	1112.3	55000			**F904_1112 P90 BXN90S4**	529
1.4	7047	1.1	1058.1	45000			**F804_1058 P90 BXN90S4**	526
1.5	6567	2.1	986.0	55000			**F904_986.0 P90 BXN90S4**	529
1.5	6474	1.2	972.0	45000			**F804_972.0 P90 BXN90S4**	526
1.6	6062	2.3	910.2	55000			**F904_910.2 P90 BXN90S4**	529
1.6	5976	1.3	897.3	45000			**F804_897.3 P90 BXN90S4**	526
1.7	5476	0.9	822.2	35000			**F704_822.2 P90 BXN90S4**	523
1.8	5158	1.6	774.4	45000			**F804_774.4 P90 BXN90S4**	526
1.8	5151	2.7	773.4	55000			**F904_773.4 P90 BXN90S4**	529
1.9	5055	1.0	759.0	35000			**F704_759.0 P90 BXN90S4**	523
1.9	4893	1.6	489.1	45000				
2.0	4761	1.7	714.9	45000			**F804_714.9 P90 BXN90S4**	526
2.0	4755	2.9	714.0	55000			**F904_714.0 P90 BXN90S4**	529
2.1	4517	1.8	451.5	45000				
2.2	4378	1.1	657.4	35000			**F704_657.4 P90 BXN90S4**	523
2.3	4167	3.4	625.6	55000			**F904_625.6 P90 BXN90S4**	529
2.3	4068	2.0	610.9	45000			**F804_610.9 P90 BXN90S4**	526
2.4	4042	1.2	606.8	35000			**F704_606.8 P90 BXN90S4**	523
2.5	3846	3.6	577.5	55000			**F904_577.5 P90 BXN90S4**	529
2.5	3755	2.1	563.9	45000			**F804_563.9 P90 BXN90S4**	526
2.8	3399	1.5	510.4	35000			**F704_510.4 P90 BXN90S4**	523
2.9	3262	0.9	489.8	20000			**F604_489.8 P90 BXN90S4**	519
2.9	3258	2.5	489.1	45000			**F804_489.1 P90 BXN90S4**	526
3.0	3138	1.6	471.2	35000			**F704_471.2 P90 BXN90S4**	523
3.2	3007	2.7	451.5	45000			**F804_451.5 P90 BXN90S4**	526
3.3	2881	1.0	432.6	20000			**F604_432.6 P90 BXN90S4**	519
3.5	2687	1.9	403.5	35000			**F704_403.5 P90 BXN90S4**	523

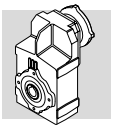

1.1 kW

n_2 min^{-1}	M_2 Nm	S	i	R_{n2} N	 IE3		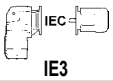 IE3	
3.6	2660	1.1	399.3	20000			**F604_399.3 P90 BXN90S4**	519
3.7	2552	3.1	383.2	45000			**F804_383.2 P90 BXN90S4**	526
3.8	2481	2.0	372.5	35000			**F704_372.5 P90 BXN90S4**	523
4.0	2356	3.4	353.7	45000			**F804_353.7 P90 BXN90S4**	526
4.2	2276	1.3	341.7	20000			**F604_341.7 P90 BXN90S4**	519
4.5	2100	1.4	315.4	20000			**F604_315.4 P90 BXN90S4**	519
4.7	2027	2.5	304.3	35000			**F704_304.3 P90 BXN90S4**	523
5.0	1968	0.9	285.9	12000			**F513_285.9 P90 BXN90S4**	515
5.1	1871	2.7	280.9	35000			**F704_280.9 P90 BXN90S4**	523
5.1	1932	1.5	280.7	20000			**F603_280.7 P90 BXN90S4**	519
5.5	1804	1.0	262.1	12000			**F513_262.1 P90 BXN90S4**	515
5.5	1783	1.6	259.1	20000			**F603_259.1 P90 BXN90S4**	519
6.0	1651	1.1	239.8	12000			**F513_239.8 P90 BXN90S4**	515
6.1	1623	1.8	235.8	20000			**F603_235.8 P90 BXN90S4**	519
6.1	1562	3.2	234.6	35000			**F704_234.6 P90 BXN90S4**	523
6.6	1498	1.9	217.6	20000			**F603_217.6 P90 BXN90S4**	519
6.6	1492	1.2	216.9	12000			**F513_216.9 P90 BXN90S4**	515
6.6	1442	3.5	216.5	35000			**F704_216.5 P90 BXN90S4**	523
7.1	1393	1.3	202.4	12000			**F513_202.4 P90 BXN90S4**	515
7.1	1386	2.1	201.4	20000			**F603_201.4 P90 BXN90S4**	519
7.7	1279	2.3	185.9	20000			**F603_185.9 P90 BXN90S4**	519
7.9	1244	0.9	180.7	8500			**F413_180.7 P90 BXN90S4**	511
8.5	1161	0.9	168.7	8500			**F413_168.7 P90 BXN90S4**	511
8.6	1140	1.6	165.6	12000			**F513_165.6 P90 BXN90S4**	515
8.8	1121	2.6	162.9	20000			**F603_162.9 P90 BXN90S4**	519
9.5	1035	2.8	150.4	20000			**F603_150.4 P90 BXN90S4**	519
10.6	925	1.2	134.4	8500			**F413_134.4 P90 BXN90S4**	511
11.0	894	2.0	129.9	12000			**F513_129.9 P90 BXN90S4**	515
13.5	730	1.5	106.0	8500			**F413_106.0 P90 BXN90S4**	511
13.6	723	2.5	105.1	12000			**F513_105.1 P90 BXN90S4**	515
16.4	601	1.0	87.4	6500			**F313_87.4 P90 BXN90S4**	507
16.8	584	1.9	84.9	8500			**F413_84.9 P90 BXN90S4**	511
17.2	573	3.1	83.2	12000			**F513_83.2 P90 BXN90S4**	515
18.1	543	1.1	78.9	6500			**F313_78.9 P90 BXN90S4**	507
20.7	475	1.3	69.1	6500			**F313_69.1 P90 BXN90S4**	507
21.5	458	2.4	66.5	8500			**F413_66.5 P90 BXN90S4**	511
21.9	450	0.9	65.3	4610			**F253_65.3 P90 BXN90S4**	503
22.8	432	1.4	62.8	6500			**F313_62.8 P90 BXN90S4**	507
23.7	415	2.7	60.2	8500			**F413_60.2 P90 BXN90S4**	511
24.5	401	1.0	58.3	4500			**F253_58.3 P90 BXN90S4**	503
27.5	359	1.7	52.1	6500			**F313_52.1 P90 BXN90S4**	507
27.8	354	3.1	51.5	8500			**F413_51.5 P90 BXN90S4**	511
28.2	350	1.1	50.8	4450			**F253_50.8 P90 BXN90S4**	503
29.8	337	3.2	47.9	8500			**F412_47.9 P90 BXN90S4**	511
30	327	1.8	47.5	6500			**F313_47.5 P90 BXN90S4**	507
31	314	1.3	45.6	4400			**F253_45.6 P90 BXN90S4**	503
32	314	1.9	44.6	6500			**F312_44.6 P90 BXN90S4**	507
32	312	1.2	44.4	4470			**F252_44.4 P90 BXN90S4**	503
35	286	1.3	40.7	4410			**F252_40.7 P90 BXN90S4**	503
35	284	2.1	40.4	6500			**F312_40.4 P90 BXN90S4**	507
38	266	0.9	37.9	3050			**F202_37.9 P90 BXN90S4**	499
38	265	2.3	37.7	6500			**F312_37.7 P90 BXN90S4**	507
39	256	1.6	36.4	4330			**F252_36.4 P90 BXN90S4**	503
42	242	2.5	34.4	6500			**F312_34.4 P90 BXN90S4**	507
43	233	1.1	33.1	2980			**F202_33.1 P90 BXN90S4**	499
44	226	1.8	32.2	4240			**F252_32.2 P90 BXN90S4**	503
47	214	1.2	30.4	2930			**F202_30.4 P90 BXN90S4**	499

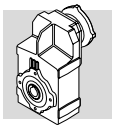

1.1 kW

n_2 min-1	M_2 Nm	S	i	R_{n2} N	IE3		IEC IE3	
47	212	2.8	30.1	6500			**F312_30.1 P90 BXN90S4**	507
48	211	1.9	30.0	4190			**F252_30.0 P90 BXN90S4**	503
52	192	3.1	27.3	6500			**F312_27.3 P90 BXN90S4**	507
53	191	2.1	27.2	4100			**F252_27.2 P90 BXN90S4**	503
55	182	1.3	25.9	2840			**F202_25.9 P90 BXN90S4**	499
60	167	2.4	23.8	3990			**F252_23.8 P90 BXN90S4**	503
62	163	1.4	23.1	2780			**F202_23.1 P90 BXN90S4**	499
66	153	2.6	21.8	3920			**F252_21.8 P90 BXN90S4**	503
71	142	1.6	20.2	2690			**F202_20.2 P90 BXN90S4**	499
74	136	1.0	19.3	2170			**F102_19.3 P90 BXN90S4**	495
77	131	3.1	18.6	3780			**F252_18.6 P90 BXN90S4**	503
79	127	1.7	18.1	2620			**F202_18.1 P90 BXN90S4**	499
84	119	1.1	17.0	2110			**F102_17.0 P90 BXN90S4**	495
86	117	3.4	16.6	3670			**F252_16.6 P90 BXN90S4**	503
97	104	2.0	14.8	2500			**F202_14.8 P90 BXN90S4**	499
98	103	1.2	14.6	2050			**F102_14.6 P90 BXN90S4**	495
110	92	1.1	13.0	1980			**F102_13.0 P90 BXN90S4**	495
124	81	1.2	11.5	1920			**F102_11.5 P90 BXN90S4**	495
127	79	2.2	11.2	2310			**F202_11.2 P90 BXN90S4**	499
143	71	2.3	10.0	2200			**F202_10.0 P90 BXN90S4**	499
146	69	1.3	9.8	1840			**F102_9.8 P90 BXN90S4**	495
164	61	2.5	8.7	2160			**F202_8.7 P90 BXN90S4**	499
167	60	1.4	8.6	1780			**F102_8.6 P90 BXN90S4**	495
183	55	2.6	7.8	2100			**F202_7.8 P90 BXN90S4**	499
193	52	1.5	7.4	1720			**F102_7.4 P90 BXN90S4**	495
223	45	2.9	6.4	1980			**F202_6.4 P90 BXN90S4**	499

1.5 kW

n_2 min-1	M_2 Nm	S	i	R_{n2} N	IE2	IE3		IEC IE2	IE3	
0.8	15321	0.9	1702.3	55000	**F904_1702 S3 ME3SB4**	**F904_1702 S3 MX3SB4**	528	**F904_1702 P90 BE90LA4**	**F904_1702 P90 BX90LA4**	529
0.9	14142	1.0	1571.4	55000	**F904_1571 S3 ME3SB4**	**F904_1571 S3 MX3SB4**	528	**F904_1571 P90 BE90LA4**	**F904_1571 P90 BX90LA4**	529
1.0	12851	1.1	1427.9	55000	**F904_1428 S3 ME3SB4**	**F904_1428 S3 MX3SB4**	528	**F904_1428 P90 BE90LA4**	**F904_1428 P90 BX90LA4**	529
1.1	11863	1.2	1318.1	55000	**F904_1318 S3 ME3SB4**	**F904_1318 S3 MX3SB4**	528	**F904_1318 P90 BE90LA4**	**F904_1318 P90 BX90LA4**	529
1.2	10845	1.3	1204.9	55000	**F904_1205 S3 ME3SB4**	**F904_1205 S3 MX3SB4**	528	**F904_1205 P90 BE90LA4**	**F904_1205 P90 BX90LA4**	529
1.3	10010	1.4	1112.3	55000	**F904_1112 S3 ME3SB4**	**F904_1112 S3 MX3SB4**	528	**F904_1112 P90 BE90LA4**	**F904_1112 P90 BX90LA4**	529
1.5	8874	1.6	986.0	55000	**F904_986.0 S3 ME3SB4**	**F904_986.0 S3 MX3SB4**	528	**F904_986.0 P90 BE90LA4**	**F904_986.0 P90 BX90LA4**	529
1.5	8748	0.9	972.0	45000	**F804_972.0 S3 ME3SB4**	**F804_972.0 S3 MX3SB4**	525	**F804_972.0 P90 BE90LA4**	**F804_972.0 P90 BX90LA4**	526
1.6	8192	1.7	910.2	55000	**F904_910.2 S3 ME3SB4**	**F904_910.2 S3 MX3SB4**	528	**F904_910.2 P90 BE90LA4**	**F904_910.2 P90 BX90LA4**	529
1.6	8075	1.0	897.3	45000	**F804_897.3 S3 ME3SB4**	**F804_897.3 S3 MX3SB4**	525	**F804_897.3 P90 BE90LA4**	**F804_897.3 P90 BX90LA4**	526
1.8	6970	1.1	774.4	45000	**F804_774.4 S3 ME3SB4**	**F804_774.4 S3 MX3SB4**	525	**F804_774.4 P90 BE90LA4**	**F804_774.4 P90 BX90LA4**	526
1.8	6961	2.0	773.4	55000	**F904_773.4 S3 ME3SB4**	**F904_773.4 S3 MX3SB4**	528	**F904_773.4 P90 BE90LA4**	**F904_773.4 P90 BX90LA4**	529
2.0	6434	1.2	714.9	45000	**F804_714.9 S3 ME3SB4**	**F804_714.9 S3 MX3SB4**	525	**F804_714.9 P90 BE90LA4**	**F804_714.9 P90 BX90LA4**	526
2.0	6426	2.2	714.0	55000	**F904_714.0 S3 ME3SB4**	**F904_714.0 S3 MX3SB4**	528	**F904_714.0 P90 BE90LA4**	**F904_714.0 P90 BX90LA4**	529
2.3	5631	2.5	625.6	55000	**F904_625.6 S3 ME3SB4**	**F904_625.6 S3 MX3SB4**	528	**F904_625.6 P90 BE90LA4**	**F904_625.6 P90 BX90LA4**	529
2.3	5498	1.5	610.9	45000	**F804_610.9 S3 ME3SB4**	**F804_610.9 S3 MX3SB4**	525	**F804_610.9 P90 BE90LA4**	**F804_610.9 P90 BX90LA4**	526
2.4	5462	0.9	606.8	35000	**F704_606.8 S3 ME3SB4**	**F704_606.8 S3 MX3SB4**	522	**F704_606.8 P90 BE90LA4**	**F704_606.8 P90 BX90LA4**	523

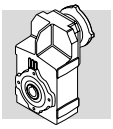

1.5 kW

n_2 min-1	M_2 Nm	S	i	R_{n2} N	IE2	IE3		IEC IE2	IE3	
2.5	5197	2.7	577.5	55000	**F904_577.5 S3 ME3SB4**	**F904_577.5 S3 MX3SB4**	528	**F904_577.5 P90 BE90LA4**	**F904_577.5 P90 BX90LA4**	529
2.5	5075	1.6	563.9	45000	**F804_563.9 S3 ME3SB4**	**F804_563.9 S3 MX3SB4**	525	**F804_563.9 P90 BE90LA4**	**F804_563.9 P90 BX90LA4**	526
2.8	4594	1.1	510.4	35000	**F704_510.4 S3 ME3SB4**	**F704_510.4 S3 MX3SB4**	522	**F704_510.4 P90 BE90LA4**	**F704_510.4 P90 BX90LA4**	523
2.9	4460	3.1	495.6	55000	**F904_495.6 S3 ME3SB4**	**F904_495.6 S3 MX3SB4**	528	**F904_495.6 P90 BE90LA4**	**F904_495.6 P90 BX90LA4**	529
2.9	4402	1.8	489.1	45000	**F804_489.1 S3 ME3SB4**	**F804_489.1 S3 MX3SB4**	525	**F804_489.1 P90 BE90LA4**	**F804_489.1 P90 BX90LA4**	526
3.0	4240	1.2	471.2	35000	**F704_471.2 S3 ME3SB4**	**F704_471.2 S3 MX3SB4**	522	**F704_471.2 P90 BE90LA4**	**F704_471.2 P90 BX90LA4**	523
3.1	4117	3.4	457.5	55000	**F904_457.5 S3 ME3SB4**	**F904_457.5 S3 MX3SB4**	528	**F904_457.5 P90 BE90LA4**	**F904_457.5 P90 BX90LA4**	529
3.2	4063	2.0	451.5	45000	**F804_451.5 S3 ME3SB4**	**F804_451.5 S3 MX3SB4**	525	**F804_451.5 P90 BE90LA4**	**F804_451.5 P90 BX90LA4**	526
3.5	3632	1.4	403.5	35000	**F704_403.5 S3 ME3SB4**	**F704_403.5 S3 MX3SB4**	522	**F704_403.5 P90 BE90LA4**	**F704_403.5 P90 BX90LA4**	523
3.7	3448	2.3	383.2	45000	**F804_383.2 S3 ME3SB4**	**F804_383.2 S3 MX3SB4**	525	**F804_383.2 P90 BE90LA4**	**F804_383.2 P90 BX90LA4**	526
3.8	3352	1.5	372.5	35000	**F704_372.5 S3 ME3SB4**	**F704_372.5 S3 MX3SB4**	522	**F704_372.5 P90 BE90LA4**	**F704_372.5 P90 BX90LA4**	523
4.0	3183	2.5	353.7	45000	**F804_353.7 S3 ME3SB4**	**F804_353.7 S3 MX3SB4**	525	**F804_353.7 P90 BE90LA4**	**F804_353.7 P90 BX90LA4**	526
4.2	3075	0.9	341.7	20000	**F604_341.7 S3 ME3SB4**	**F604_341.7 S3 MX3SB4**	518	**F604_341.7 P90 BE90LA4**	**F604_341.7 P90 BX90LA4**	519
4.5	2839	1.0	315.4	20000	**F604_315.4 S3 ME3SB4**	**F604_315.4 S3 MX3SB4**	518	**F604_315.4 P90 BE90LA4**	**F604_315.4 P90 BX90LA4**	519
4.7	2739	1.8	304.3	35000	**F704_304.3 S3 ME3SB4**	**F704_304.3 S3 MX3SB4**	522	**F704_304.3 P90 BE90LA4**	**F704_304.3 P90 BX90LA4**	523
4.8	2670	3.0	296.7	45000	**F804_296.7 S3 ME3SB4**	**F804_296.7 S3 MX3SB4**	525	**F804_296.7 P90 BE90LA4**	**F804_296.7 P90 BX90LA4**	526
5.1	2528	2.0	280.9	35000	**F704_280.9 S3 ME3SB4**	**F704_280.9 S3 MX3SB4**	522	**F704_280.9 P90 BE90LA4**	**F704_280.9 P90 BX90LA4**	523
5.1	2610	1.1	280.7	20000	**F603_280.7 S3 ME3SB4**	**F603_280.7 S3 MX3SB4**	518	**F603_280.7 P90 BE90LA4**	**F603_280.7 P90 BX90LA4**	519
5.2	2465	3.2	273.9	45000	**F804_273.9 S3 ME3SB4**	**F804_273.9 S3 MX3SB4**	525	**F804_273.9 P90 BE90LA4**	**F804_273.9 P90 BX90LA4**	526
5.5	2409	1.2	259.1	20000	**F603_259.1 S3 ME3SB4**	**F603_259.1 S3 MX3SB4**	518	**F603_259.1 P90 BE90LA4**	**F603_259.1 P90 BX90LA4**	519
6.1	2193	1.3	235.8	20000	**F603_235.8 S3 ME3SB4**	**F603_235.8 S3 MX3SB4**	518	**F603_235.8 P90 BE90LA4**	**F603_235.8 P90 BX90LA4**	519
6.1	2111	2.4	234.6	35000	**F704_234.6 S3 ME3SB4**	**F704_234.6 S3 MX3SB4**	522	**F704_234.6 P90 BE90LA4**	**F704_234.6 P90 BX90LA4**	523
6.6	2024	1.4	217.6	20000	**F603_217.6 S3 ME3SB4**	**F603_217.6 S3 MX3SB4**	518	**F603_217.6 P90 BE90LA4**	**F603_217.6 P90 BX90LA4**	519
6.6	1949	2.6	216.5	35000	**F704_216.5 S3 ME3SB4**	**F704_216.5 S3 MX3SB4**	522	**F704_216.5 P90 BE90LA4**	**F704_216.5 P90 BX90LA4**	523
7.1	1882	1.0	202.4	12000	**F513_202.4 S3 ME3SB4**	**F513_202.4 S3 MX3SB4**	514	**F513_202.4 P90 BE90LA4**	**F513_202.4 P90 BX90LA4**	515
7.1	1873	1.5	201.4	20000	**F603_201.4 S3 ME3SB4**	**F603_201.4 S3 MX3SB4**	518	**F603_201.4 P90 BE90LA4**	**F603_201.4 P90 BX90LA4**	519
7.3	1823	2.7	196.0	35000	**F703_196.0 S3 ME3SB4**	**F703_196.0 S3 MX3SB4**	522	**F703_196.0 P90 BE90LA4**	**F703_196.0 P90 BX90LA4**	523
7.7	1729	1.7	185.9	20000	**F603_185.9 S3 ME3SB4**	**F603_185.9 S3 MX3SB4**	518	**F603_185.9 P90 BE90LA4**	**F603_185.9 P90 BX90LA4**	519
7.9	1683	3.0	180.9	35000	**F703_180.9 S3 ME3SB4**	**F703_180.9 S3 MX3SB4**	522	**F703_180.9 P90 BE90LA4**	**F703_180.9 P90 BX90LA4**	523
8.6	1550	3.2	166.7	35000	**F703_166.7 S3 ME3SB4**	**F703_166.7 S3 MX3SB4**	522	**F703_166.7 P90 BE90LA4**	**F703_166.7 P90 BX90LA4**	523
8.6	1540	1.2	165.6	12000	**F513_165.6 S3 ME3SB4**	**F513_165.6 S3 MX3SB4**	514	**F513_165.6 P90 BE90LA4**	**F513_165.6 P90 BX90LA4**	515
8.8	1515	1.9	162.9	20000	**F603_162.9 S3 ME3SB4**	**F603_162.9 S3 MX3SB4**	518	**F603_162.9 P90 BE90LA4**	**F603_162.9 P90 BX90LA4**	519
9.3	1431	3.5	153.8	35000	**F703_153.8 S3 ME3SB4**	**F703_153.8 S3 MX3SB4**	522	**F703_153.8 P90 BE90LA4**	**F703_153.8 P90 BX90LA4**	523
9.5	1398	2.1	150.4	20000	**F603_150.4 S3 ME3SB4**	**F603_150.4 S3 MX3SB4**	518	**F603_150.4 P90 BE90LA4**	**F603_150.4 P90 BX90LA4**	519
10.6	1250	0.9	134.4	8500	**F413_134.4 S3 ME3SB4**	**F413_134.4 S3 MX3SB4**	510	**F413_134.4 P90 BE90LA4**	**F413_134.4 P90 BX90LA4**	511
11.0	1214	2.4	130.5	20000	**F603_130.5 S3 ME3SB4**	**F603_130.5 S3 MX3SB4**	518	**F603_130.5 P90 BE90LA4**	**F603_130.5 P90 BX90LA4**	519
11.0	1208	1.5	129.9	12000	**F513_129.9 S3 ME3SB4**	**F513_129.9 S3 MX3SB4**	514	**F513_129.9 P90 BE90LA4**	**F513_129.9 P90 BX90LA4**	515
11.9	1120	2.6	120.5	20000	**F603_120.5 S3 ME3SB4**	**F603_120.5 S3 MX3SB4**	518	**F603_120.5 P90 BE90LA4**	**F603_120.5 P90 BX90LA4**	519
13.4	989	2.9	106.4	20000	**F603_106.4 S3 ME3SB4**	**F603_106.4 S3 MX3SB4**	518	**F603_106.4 P90 BE90LA4**	**F603_106.4 P90 BX90LA4**	519
13.5	986	1.1	106.0	8500	**F413_106.0 S3 ME3SB4**	**F413_106.0 S3 MX3SB4**	510	**F413_106.0 P90 BE90LA4**	**F413_106.0 P90 BX90LA4**	511
13.6	977	1.8	105.1	12000	**F513_105.1 S3 ME3SB4**	**F513_105.1 S3 MX3SB4**	514	**F513_105.1 P90 BE90LA4**	**F513_105.1 P90 BX90LA4**	515
14.6	913	3.2	98.2	20000	**F603_98.2 S3 ME3SB4**	**F603_98.2 S3 MX3SB4**	518	**F603_98.2 P90 BE90LA4**	**F603_98.2 P90 BX90LA4**	519
16.8	789	1.4	84.9	8500	**F413_84.9 S3 ME3SB4**	**F413_84.9 S3 MX3SB4**	510	**F413_84.9 P90 BE90LA4**	**F413_84.9 P90 BX90LA4**	511
17.2	774	2.3	83.2	12000	**F513_83.2 S3 ME3SB4**	**F513_83.2 S3 MX3SB4**	514	**F513_83.2 P90 BE90LA4**	**F513_83.2 P90 BX90LA4**	515
20.7	642	0.9	69.1	6500	**F313_69.1 S3 ME3SB4**	**F313_69.1 S3 MX3SB4**	506	**F313_69.1 P90 BE90LA4**	**F313_69.1 P90 BX90LA4**	507
21.5	618	1.8	66.5	8500	**F413_66.5 S3 ME3SB4**	**F413_66.5 S3 MX3SB4**	510	**F413_66.5 P90 BE90LA4**	**F413_66.5 P90 BX90LA4**	511
21.7	612	2.9	65.8	12000	**F513_65.8 S3 ME3SB4**	**F513_65.8 S3 MX3SB4**	514	**F513_65.8 P90 BE90LA4**	**F513_65.8 P90 BX90LA4**	515
22.8	584	1.0	62.8	6500	**F313_62.8 S3 ME3SB4**	**F313_62.8 S3 MX3SB4**	506	**F313_62.8 P90 BE90LA4**	**F313_62.8 P90 BX90LA4**	507
23.7	560	2.0	60.2	8500	**F413_60.2 S3 ME3SB4**	**F413_60.2 S3 MX3SB4**	510	**F413_60.2 P90 BE90LA4**	**F413_60.2 P90 BX90LA4**	511
27.5	484	1.2	52.1	6500	**F313_52.1 S3 ME3SB4**	**F313_52.1 S3 MX3SB4**	506	**F313_52.1 P90 BE90LA4**	**F313_52.1 P90 BX90LA4**	507
27.8	479	2.3	51.5	8500	**F413_51.5 S3 ME3SB4**	**F413_51.5 S3 MX3SB4**	510	**F413_51.5 P90 BE90LA4**	**F413_51.5 P90 BX90LA4**	511
29.8	455	2.4	47.9	8500	**F412_47.9 S3 ME3SB4**	**F412_47.9 S3 MX3SB4**	510	**F412_47.9 P90 BE90LA4**	**F412_47.9 P90 BX90LA4**	511
30	442	1.3	47.5	6500	**F313_47.5 S3 ME3SB4**	**F313_47.5 S3 MX3SB4**	506	**F313_47.5 P90 BE90LA4**	**F313_47.5 P90 BX90LA4**	507

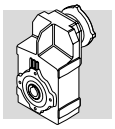

1.5 kW

n_2	M_2	S	i	R_{n2}	IE2	IE3		IE2	IEC IE3	
min-1	Nm			N						
31	424	0.9	45.6	3880	**F253_45.6 S3 ME3SB4**	**F253_45.6 S3 MX3SB4**	502	**F253_45.6 P90 BE90LA4**	**F253_45.6 P90 BX90LA4**	503
32	424	1.4	44.6	6500	**F312_44.6 S3 ME3SB4**	**F312_44.6 S3 MX3SB4**	506	**F312_44.6 P90 BE90LA4**	**F312_44.6 P90 BX90LA4**	507
32	422	0.9	44.4	4180	**F252_44.4 S3 ME3SB4**	**F252_44.4 S3 MX3SB4**	502	**F252_44.4 P90 BE90LA4**	**F252_44.4 P90 BX90LA4**	503
35	387	1.0	40.7	3970	**F252_40.7 S3 ME3SB4**	**F252_40.7 S3 MX3SB4**	502	**F252_40.7 P90 BE90LA4**	**F252_40.7 P90 BX90LA4**	503
35	383	1.6	40.4	6500	**F312_40.4 S3 ME3SB4**	**F312_40.4 S3 MX3SB4**	506	**F312_40.4 P90 BE90LA4**	**F312_40.4 P90 BX90LA4**	507
37	363	3.0	38.2	8500	**F412_38.2 S3 ME3SB4**	**F412_38.2 S3 MX3SB4**	510	**F412_38.2 P90 BE90LA4**	**F412_38.2 P90 BX90LA4**	511
38	358	1.7	37.7	6500	**F312_37.7 S3 ME3SB4**	**F312_37.7 S3 MX3SB4**	506	**F312_37.7 P90 BE90LA4**	**F312_37.7 P90 BX90LA4**	507
39	346	1.2	36.4	3940	**F252_36.4 S3 ME3SB4**	**F252_36.4 S3 MX3SB4**	502	**F252_36.4 P90 BE90LA4**	**F252_36.4 P90 BX90LA4**	503
42	326	1.8	34.4	6500	**F312_34.4 S3 ME3SB4**	**F312_34.4 S3 MX3SB4**	506	**F312_34.4 P90 BE90LA4**	**F312_34.4 P90 BX90LA4**	507
44	306	1.3	32.2	3890	**F252_32.2 S3 ME3SB4**	**F252_32.2 S3 MX3SB4**	502	**F252_32.2 P90 BE90LA4**	**F252_32.2 P90 BX90LA4**	503
47	286	2.1	30.1	6500	**F312_30.1 S3 ME3SB4**	**F312_30.1 S3 MX3SB4**	506	**F312_30.1 P90 BE90LA4**	**F312_30.1 P90 BX90LA4**	507
48	285	1.4	30.0	3860	**F252_30.0 S3 ME3SB4**	**F252_30.0 S3 MX3SB4**	502	**F252_30.0 P90 BE90LA4**	**F252_30.0 P90 BX90LA4**	503
52	259	2.3	27.3	6500	**F312_27.3 S3 ME3SB4**	**F312_27.3 S3 MX3SB4**	506	**F312_27.3 P90 BE90LA4**	**F312_27.3 P90 BX90LA4**	507
53	258	1.5	27.2	3810	**F252_27.2 S3 ME3SB4**	**F252_27.2 S3 MX3SB4**	502	**F252_27.2 P90 BE90LA4**	**F252_27.2 P90 BX90LA4**	503
55	246	1.0	25.9	2640	**F202_25.9 S3 ME3SB4**	**F202_25.9 S3 MX3SB4**	498	**F202_25.9 P90 BE90LA4**	**F202_25.9 P90 BX90LA4**	499
60	226	1.8	23.8	3730	**F252_23.8 S3 ME3SB4**	**F252_23.8 S3 MX3SB4**	502	**F252_23.8 P90 BE90LA4**	**F252_23.8 P90 BX90LA4**	503
61	222	2.7	23.4	6480	**F312_23.4 S3 ME3SB4**	**F312_23.4 S3 MX3SB4**	506	**F312_23.4 P90 BE90LA4**	**F312_23.4 P90 BX90LA4**	507
62	220	1.1	23.1	2600	**F202_23.1 S3 ME3SB4**	**F202_23.1 S3 MX3SB4**	498	**F202_23.1 P90 BE90LA4**	**F202_23.1 P90 BX90LA4**	499
66	207	1.9	21.8	3680	**F252_21.8 S3 ME3SB4**	**F252_21.8 S3 MX3SB4**	502	**F252_21.8 P90 BE90LA4**	**F252_21.8 P90 BX90LA4**	503
68	201	3.0	21.1	6320	**F312_21.1 S3 ME3SB4**	**F312_21.1 S3 MX3SB4**	506	**F312_21.1 P90 BE90LA4**	**F312_21.1 P90 BX90LA4**	507
71	191	1.2	20.2	2530	**F202_20.2 S3 ME3SB4**	**F202_20.2 S3 MX3SB4**	498	**F202_20.2 P90 BE90LA4**	**F202_20.2 P90 BX90LA4**	499
77	177	2.3	18.6	3570	**F252_18.6 S3 ME3SB4**	**F252_18.6 S3 MX3SB4**	502	**F252_18.6 P90 BE90LA4**	**F252_18.6 P90 BX90LA4**	503
77	176	3.4	18.5	6110	**F312_18.5 S3 ME3SB4**	**F312_18.5 S3 MX3SB4**	506	**F312_18.5 P90 BE90LA4**	**F312_18.5 P90 BX90LA4**	507
79	172	1.2	18.1	2480	**F202_18.1 S3 ME3SB4**	**F202_18.1 S3 MX3SB4**	498	**F202_18.1 P90 BE90LA4**	**F202_18.1 P90 BX90LA4**	499
86	158	2.5	16.6	3490	**F252_16.6 S3 ME3SB4**	**F252_16.6 S3 MX3SB4**	502	**F252_16.6 P90 BE90LA4**	**F252_16.6 P90 BX90LA4**	503
97	141	1.4	14.8	2380	**F202_14.8 S3 ME3SB4**	**F202_14.8 S3 MX3SB4**	498	**F202_14.8 P90 BE90LA4**	**F202_14.8 P90 BX90LA4**	499
99	137	2.9	14.5	3390	**F252_14.5 S3 ME3SB4**	**F252_14.5 S3 MX3SB4**	502	**F252_14.5 P90 BE90LA4**	**F252_14.5 P90 BX90LA4**	503
110	123	3.2	13.0	3310	**F252_13.0 S3 ME3SB4**	**F252_13.0 S3 MX3SB4**	502	**F252_13.0 P90 BE90LA4**	**F252_13.0 P90 BX90LA4**	503
124	110	0.9	11.5	1160	**F102_11.5 S3 ME3SB4**	**F102_11.5 S3 MX3SB4**	494	**F102_11.5 P90 BE90LA4**	**F102_11.5 P90 BX90LA4**	495
127	107	1.7	11.2	2220	**F202_11.2 S3 ME3SB4**	**F202_11.2 S3 MX3SB4**	498	**F202_11.2 P90 BE90LA4**	**F202_11.2 P90 BX90LA4**	499
143	95	1.7	10.0	2160	**F202_10.0 S3 ME3SB4**	**F202_10.0 S3 MX3SB4**	498	**F202_10.0 P90 BE90LA4**	**F202_10.0 P90 BX90LA4**	499
146	93	1.0	9.8	1760	**F102_9.8 S3 ME3SB4**	**F102_9.8 S3 MX3SB4**	494	**F102_9.8 P90 BE90LA4**	**F102_9.8 P90 BX90LA4**	495
153	89	3.0	9.4	3070	**F252_9.4 S3 ME3SB4**	**F252_9.4 S3 MX3SB4**	502	**F252_9.4 P90 BE90LA4**	**F252_9.4 P90 BX90LA4**	503
164	83	1.9	8.7	2090	**F202_8.7 S3 ME3SB4**	**F202_8.7 S3 MX3SB4**	498	**F202_8.7 P90 BE90LA4**	**F202_8.7 P90 BX90LA4**	499
167	82	1.0	8.6	1710	**F102_8.6 S3 ME3SB4**	**F102_8.6 S3 MX3SB4**	494	**F102_8.6 P90 BE90LA4**	**F102_8.6 P90 BX90LA4**	495
170	80	3.3	8.4	2980	**F252_8.4 S3 ME3SB4**	**F252_8.4 S3 MX3SB4**	502	**F252_8.4 P90 BE90LA4**	**F252_8.4 P90 BX90LA4**	503
183	74	1.9	7.8	2030	**F202_7.8 S3 ME3SB4**	**F202_7.8 S3 MX3SB4**	498	**F202_7.8 P90 BE90LA4**	**F202_7.8 P90 BX90LA4**	499
193	70	1.1	7.4	1650	**F102_7.4 S3 ME3SB4**	**F102_7.4 S3 MX3SB4**	494	**F102_7.4 P90 BE90LA4**	**F102_7.4 P90 BX90LA4**	495
223	61	2.1	6.4	1930	**F202_6.4 S3 ME3SB4**	**F202_6.4 S3 MX3SB4**	498	**F202_6.4 P90 BE90LA4**	**F202_6.4 P90 BX90LA4**	499
247	55	1.4	11.5	1560	**F102_11.5 S3 ME3SA2**		494	**F102_11.5 P90 BE90SA2**		495
254	54	2.6	11.2	1860	**F202_11.2 S3 ME3SA2**		498	**F202_11.2 P90 BE90SA2**		499
292	47	1.6	9.8	1490	**F102_9.8 S3 ME3SA2**		494	**F102_9.8 P90 BE90SA2**		495
327	42	3.0	8.7	1740	**F202_8.7 S3 ME3SA2**		498	**F202_8.7 P90 BE90SA2**		499
333	41	1.6	8.6	1440	**F102_8.6 S3 ME3SA2**		494	**F102_8.6 P90 BE90SA2**		495
364	37	3.1	7.8	1680	**F202_7.8 S3 ME3SA2**		498	**F202_7.8 P90 BE90SA2**		499
386	35	1.8	7.4	1380	**F102_7.4 S3 ME3SA2**		494	**F102_7.4 P90 BE90SA2**		495
445	31	3.4	6.4	1590	**F202_6.4 S3 ME3SA2**		498	**F202_6.4 P90 BE90SA2**		499

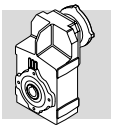

1.5 kW

n_2 min-1	M_2 Nm	S	i	R_{n2} N	 IE3		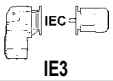 IE3	
0.8	15321	0.9	1702.3	55000			**F904_1702 P90 BXN90L4**	529
0.9	14142	1.0	1571.4	55000			**F904_1571 P90 BXN90L4**	529
1.0	12851	1.1	1427.9	55000			**F904_1428 P90 BXN90L4**	529
1.1	11863	1.2	1318.1	55000			**F904_1318 P90 BXN90L4**	529
1.2	10845	1.3	1204.9	55000			**F904_1205 P90 BXN90L4**	529
1.3	10010	1.4	1112.3	55000			**F904_1112 P90 BXN90L4**	529
1.5	8874	1.6	986.0	55000			**F904_986.0 P90 BXN90L4**	529
1.5	8748	0.9	972.0	45000			**F804_972.0 P90 BXN90L4**	526
1.6	8192	1.7	910.2	55000			**F904_910.2 P90 BXN90L4**	529
1.6	8075	1.0	897.3	45000			**F804_897.3 P90 BXN90L4**	526
1.8	6970	1.1	774.4	45000			**F804_774.4 P90 BXN90L4**	526
1.8	6961	2.0	773.4	55000			**F904_773.4 P90 BXN90L4**	529
2.0	6434	1.2	714.9	45000			**F804_714.9 P90 BXN90L4**	526
2.0	6426	2.2	714.0	55000			**F904_714.0 P90 BXN90L4**	529
2.3	5631	2.5	625.6	55000			**F904_625.6 P90 BXN90L4**	529
2.3	5498	1.5	610.9	45000			**F804_610.9 P90 BXN90L4**	526
2.4	5462	0.9	606.8	35000			**F704_606.8 P90 BXN90L4**	523
2.5	5197	2.7	577.5	55000			**F904_577.5 P90 BXN90L4**	529
2.5	5075	1.6	563.9	45000			**F804_563.9 P90 BXN90L4**	526
2.8	4594	1.1	510.4	35000			**F704_510.4 P90 BXN90L4**	523
2.9	4460	3.1	495.6	55000			**F904_495.6 P90 BXN90L4**	529
2.9	4402	1.8	489.1	45000			**F804_489.1 P90 BXN90L4**	526
3.0	4240	1.2	471.2	35000			**F704_471.2 P90 BXN90L4**	523
3.1	4117	3.4	457.5	55000			**F904_457.5 P90 BXN90L4**	529
3.2	4063	2.0	451.5	45000			**F804_451.5 P90 BXN90L4**	526
3.5	3632	1.4	403.5	35000			**F704_403.5 P90 BXN90L4**	523
3.7	3448	2.3	383.2	45000			**F804_383.2 P90 BXN90L4**	526
3.8	3352	1.5	372.5	35000			**F704_372.5 P90 BXN90L4**	523
4.0	3183	2.5	353.7	45000			**F804_353.7 P90 BXN90L4**	526
4.2	3075	0.9	341.7	20000			**F604_341.7 P90 BXN90L4**	519
4.5	2839	1.0	315.4	20000			**F604_315.4 P90 BXN90L4**	519
4.7	2739	1.8	304.3	35000			**F704_304.3 P90 BXN90L4**	523
4.8	2670	3.0	296.7	45000			**F804_296.7 P90 BXN90L4**	526
5.1	2528	2.0	280.9	35000			**F704_280.9 P90 BXN90L4**	523
5.1	2610	1.1	280.7	20000			**F603_280.7 P90 BXN90L4**	519
5.2	2465	3.2	273.9	45000			**F804_273.9 P90 BXN90L4**	526
5.5	2409	1.2	259.1	20000			**F603_259.1 P90 BXN90L4**	519
6.1	2193	1.3	235.8	20000			**F603_235.8 P90 BXN90L4**	519
6.1	2111	2.4	234.6	35000			**F704_234.6 P90 BXN90L4**	523
6.6	2024	1.4	217.6	20000			**F603_217.6 P90 BXN90L4**	519
6.6	1949	2.6	216.5	35000			**F704_216.5 P90 BXN90L4**	523
7.1	1882	1.0	202.4	12000			**F513_202.4 P90 BXN90L4**	515
7.1	1873	1.5	201.4	20000			**F603_201.4 P90 BXN90L4**	519
7.3	1823	2.7	196.0	35000			**F703_196.0 P90 BXN90L4**	523
7.7	1729	1.7	185.9	20000			**F603_185.9 P90 BXN90L4**	519
7.9	1683	3.0	180.9	35000			**F703_180.9 P90 BXN90L4**	523
8.6	1550	3.2	166.7	35000			**F703_166.7 P90 BXN90L4**	523
8.6	1540	1.2	165.6	12000			**F513_165.6 P90 BXN90L4**	515
8.8	1515	1.9	162.9	20000			**F603_162.9 P90 BXN90L4**	519
9.3	1431	3.5	153.8	35000			**F703_153.8 P90 BXN90L4**	523
9.5	1398	2.1	150.4	20000			**F603_150.4 P90 BXN90L4**	519
10.6	1250	0.9	134.4	8500			**F413_134.4 P90 BXN90L4**	511
11.0	1214	2.4	130.5	20000			**F603_130.5 P90 BXN90L4**	519
11.0	1208	1.5	129.9	12000			**F513_129.9 P90 BXN90L4**	515
11.9	1120	2.6	120.5	20000			**F603_120.5 P90 BXN90L4**	519
13.4	989	2.9	106.4	20000			**F603_106.4 P90 BXN90L4**	519
13.5	986	1.1	106.0	8500			**F413_106.0 P90 BXN90L4**	511

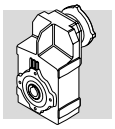

1.5 kW

n_2 min^{-1}	M_2 Nm	S	i	R_{n2} N	IE3		IEC IE3	
13.6	977	1.8	105.1	12000			**F513_105.1 P90 BXN90L4**	515
14.6	913	3.2	98.2	20000			**F603_98.2 P90 BXN90L4**	519
16.8	789	1.4	84.9	8500			**F413_84.9 P90 BXN90L4**	511
17.2	774	2.3	83.2	12000			**F513_83.2 P90 BXN90L4**	515
20.7	642	0.9	69.1	6500			**F313_69.1 P90 BXN90L4**	507
21.5	618	1.8	66.5	8500			**F413_66.5 P90 BXN90L4**	511
21.7	612	2.9	65.8	12000			**F513_65.8 P90 BXN90L4**	515
22.8	584	1.0	62.8	6500			**F313_62.8 P90 BXN90L4**	507
23.7	560	2.0	60.2	8500			**F413_60.2 P90 BXN90L4**	511
27.5	484	1.2	52.1	6500			**F313_52.1 P90 BXN90L4**	507
27.8	479	2.3	51.5	8500			**F413_51.5 P90 BXN90L4**	511
29.8	455	2.4	47.9	8500			**F412_47.9 P90 BXN90L4**	511
30	442	1.3	47.5	6500			**F313_47.5 P90 BXN90L4**	507
31	424	0.9	45.6	3880			**F253_45.6 P90 BXN90L4**	503
32	424	1.4	44.6	6500			**F312_44.6 P90 BXN90L4**	507
32	422	0.9	44.4	4180			**F252_44.4 P90 BXN90L4**	503
35	387	1.0	40.7	3970			**F252_40.7 P90 BXN90L4**	503
35	383	1.6	40.4	6500			**F312_40.4 P90 BXN90L4**	507
37	363	3.0	38.2	8500			**F412_38.2 P90 BXN90L4**	511
38	358	1.7	37.7	6500			**F312_37.7 P90 BXN90L4**	507
39	346	1.2	36.4	3940			**F252_36.4 P90 BXN90L4**	503
42	326	1.8	34.4	6500			**F312_34.4 P90 BXN90L4**	507
44	306	1.3	32.2	3890			**F252_32.2 P90 BXN90L4**	503
47	286	2.1	30.1	6500			**F312_30.1 P90 BXN90L4**	507
48	285	1.4	30.0	3860			**F252_30.0 P90 BXN90L4**	503
52	259	2.3	27.3	6500			**F312_27.3 P90 BXN90L4**	507
53	258	1.5	27.2	3810			**F252_27.2 P90 BXN90L4**	503
55	246	1.0	25.9	2640			**F202_25.9 P90 BXN90L4**	499
60	226	1.8	23.8	3730			**F252_23.8 P90 BXN90L4**	503
61	222	2.7	23.4	6480			**F312_23.4 P90 BXN90L4**	507
62	220	1.1	23.1	2600			**F202_23.1 P90 BXN90L4**	499
66	207	1.9	21.8	3680			**F252_21.8 P90 BXN90L4**	503
68	201	3.0	21.1	6320			**F312_21.1 P90 BXN90L4**	507
71	191	1.2	20.2	2530			**F202_20.2 P90 BXN90L4**	499
77	177	2.3	18.6	3570			**F252_18.6 P90 BXN90L4**	503
77	176	3.4	18.5	6110			**F312_18.5 P90 BXN90L4**	507
79	172	1.2	18.1	2480			**F202_18.1 P90 BXN90L4**	499
86	158	2.5	16.6	3490			**F252_16.6 P90 BXN90L4**	503
97	141	1.4	14.8	2380			**F202_14.8 P90 BXN90L4**	499
99	137	2.9	14.5	3390			**F252_14.5 P90 BXN90L4**	503
110	123	3.2	13.0	3310			**F252_13.0 P90 BXN90L4**	503
124	110	0.9	11.5	1160			**F102_11.5 P90 BXN90L4**	495
127	107	1.7	11.2	2220			**F202_11.2 P90 BXN90L4**	499
143	95	1.7	10.0	2160			**F202_10.0 P90 BXN90L4**	499
146	93	1.0	9.8	1760			**F102_9.8 P90 BXN90L4**	495
153	89	3.0	9.4	3070			**F252_9.4 P90 BXN90L4**	503
164	83	1.9	8.7	2090			**F202_8.7 P90 BXN90L4**	499
167	82	1.0	8.6	1710			**F102_8.6 P90 BXN90L4**	495
170	80	3.3	8.4	2980			**F252_8.4 P90 BXN90L4**	503
183	74	1.9	7.8	2030			**F202_7.8 P90 BXN90L4**	499
193	70	1.1	7.4	1650			**F102_7.4 P90 BXN90L4**	495
223	61	2.1	6.4	1930			**F202_6.4 P90 BXN90L4**	499

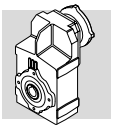

2.2 kW

n_2 min-1	M_2 Nm	S	i	R_{n2} N	IE2	IE3		IEC IE2	IEC IE3	
1.2	15941	0.9	1204.9	55000	**F904_1205 S3 ME3LA4**	**F904_1205 S3 MX3LA4**	528	**F904_1205 P100 BE100LA4**	**F904_1205 P100 BX100LA4**	529
1.3	14715	1.0	1112.3	55000	**F904_1112 S3 ME3LA4**	**F904_1112 S3 MX3LA4**	528	**F904_1112 P100 BE100LA4**	**F904_1112 P100 BX100LA4**	529
1.5	13045	1.1	986.0	55000	**F904_986.0 S3 ME3LA4**	**F904_986.0 S3 MX3LA4**	528	**F904_986.0 P100 BE100LA4**	**F904_986.0 P100 BX100LA4**	529
1.6	12042	1.2	910.2	55000	**F904_910.2 S3 ME3LA4**	**F904_910.2 S3 MX3LA4**	528	**F904_910.2 P100 BE100LA4**	**F904_910.2 P100 BX100LA4**	529
1.8	10233	1.4	773.4	55000	**F904_773.4 S3 ME3LA4**	**F904_773.4 S3 MX3LA4**	528	**F904_773.4 P100 BE100LA4**	**F904_773.4 P100 BX100LA4**	529
2.0	9446	1.5	714.0	55000	**F904_714.0 S3 ME3LA4**	**F904_714.0 S3 MX3LA4**	528	**F904_714.0 P100 BE100LA4**	**F904_714.0 P100 BX100LA4**	529
2.3	8277	1.7	625.6	55000	**F904_625.6 S3 ME3LA4**	**F904_625.6 S3 MX3LA4**	528	**F904_625.6 P100 BE100LA4**	**F904_625.6 P100 BX100LA4**	529
2.3	8082	1.0	610.9	45000	**F804_610.9 S3 ME3LA4**	**F804_610.9 S3 MX3LA4**	525	**F804_610.9 P100 BE100LA4**	**F804_610.9 P100 BX100LA4**	526
2.5	7640	1.8	577.5	55000	**F904_577.5 S3 ME3LA4**	**F904_577.5 S3 MX3LA4**	528	**F904_577.5 P100 BE100LA4**	**F904_577.5 P100 BX100LA4**	529
2.5	7460	1.1	563.9	45000	**F804_563.9 S3 ME3LA4**	**F804_563.9 S3 MX3LA4**	525	**F804_563.9 P100 BE100LA4**	**F804_563.9 P100 BX100LA4**	526
2.9	6556	2.1	495.6	55000	**F904_495.6 S3 ME3LA4**	**F904_495.6 S3 MX3LA4**	528	**F904_495.6 P100 BE100LA4**	**F904_495.6 P100 BX100LA4**	529
2.9	6471	1.2	489.1	45000	**F804_489.1 S3 ME3LA4**	**F804_489.1 S3 MX3LA4**	525	**F804_489.1 P100 BE100LA4**	**F804_489.1 P100 BX100LA4**	526
3.1	6052	2.3	457.5	55000	**F904_457.5 S3 ME3LA4**	**F904_457.5 S3 MX3LA4**	528	**F904_457.5 P100 BE100LA4**	**F904_457.5 P100 BX100LA4**	529
3.2	5973	1.3	451.5	45000	**F804_451.5 S3 ME3LA4**	**F804_451.5 S3 MX3LA4**	525	**F804_451.5 P100 BE100LA4**	**F804_451.5 P100 BX100LA4**	526
3.5	5338	0.9	403.5	35000	**F704_403.5 S3 ME3LA4**	**F704_403.5 S3 MX3LA4**	522	**F704_403.5 P100 BE100LA4**	**F704_403.5 P100 BX100LA4**	523
3.6	5186	2.7	392.0	55000	**F904_392.0 S3 ME3LA4**	**F904_392.0 S3 MX3LA4**	528	**F904_392.0 P100 BE100LA4**	**F904_392.0 P100 BX100LA4**	529
3.7	5069	1.6	383.2	45000	**F804_383.2 S3 ME3LA4**	**F804_383.2 S3 MX3LA4**	525	**F804_383.2 P100 BE100LA4**	**F804_383.2 P100 BX100LA4**	526
3.8	4928	1.0	372.5	35000	**F704_372.5 S3 ME3LA4**	**F704_372.5 S3 MX3LA4**	522	**F704_372.5 P100 BE100LA4**	**F704_372.5 P100 BX100LA4**	523
4.0	4787	2.9	361.8	55000	**F904_361.8 S3 ME3LA4**	**F904_361.8 S3 MX3LA4**	528	**F904_361.8 P100 BE100LA4**	**F904_361.8 P100 BX100LA4**	529
4.0	4679	1.7	353.7	45000	**F804_353.7 S3 ME3LA4**	**F804_353.7 S3 MX3LA4**	525	**F804_353.7 P100 BE100LA4**	**F804_353.7 P100 BX100LA4**	526
4.7	4027	1.2	304.3	35000	**F704_304.3 S3 ME3LA4**	**F704_304.3 S3 MX3LA4**	522	**F704_304.3 P100 BE100LA4**	**F704_304.3 P100 BX100LA4**	523
4.8	3926	2.0	296.7	45000	**F804_296.7 S3 ME3LA4**	**F804_296.7 S3 MX3LA4**	525	**F804_296.7 P100 BE100LA4**	**F804_296.7 P100 BX100LA4**	526
4.9	3852	3.6	291.1	55000	**F904_291.1 S3 ME3LA4**	**F904_291.1 S3 MX3LA4**	528	**F904_291.1 P100 BE100LA4**	**F904_291.1 P100 BX100LA4**	529
5.1	3717	1.3	280.9	35000	**F704_280.9 S3 ME3LA4**	**F704_280.9 S3 MX3LA4**	522	**F704_280.9 P100 BE100LA4**	**F704_280.9 P100 BX100LA4**	523
5.2	3624	2.2	273.9	45000	**F804_273.9 S3 ME3LA4**	**F804_273.9 S3 MX3LA4**	525	**F804_273.9 P100 BE100LA4**	**F804_273.9 P100 BX100LA4**	526
6.1	3223	0.9	235.8	20000	**F603_235.8 S3 ME3LA4**	**F603_235.8 S3 MX3LA4**	518	**F603_235.8 P100 BE100LA4**	**F603_235.8 P100 BX100LA4**	519
6.1	3103	1.6	234.6	35000	**F704_234.6 S3 ME3LA4**	**F704_234.6 S3 MX3LA4**	522	**F704_234.6 P100 BE100LA4**	**F704_234.6 P100 BX100LA4**	523
6.5	2891	2.8	218.5	45000	**F804_218.5 S3 ME3LA4**	**F804_218.5 S3 MX3LA4**	525	**F804_218.5 P100 BE100LA4**	**F804_218.5 P100 BX100LA4**	526
6.6	2975	1.0	217.6	20000	**F603_217.6 S3 ME3LA4**	**F603_217.6 S3 MX3LA4**	518	**F603_217.6 P100 BE100LA4**	**F603_217.6 P100 BX100LA4**	519
6.6	2865	1.7	216.5	35000	**F704_216.5 S3 ME3LA4**	**F704_216.5 S3 MX3LA4**	522	**F704_216.5 P100 BE100LA4**	**F704_216.5 P100 BX100LA4**	523
7.1	2753	1.1	201.4	20000	**F603_201.4 S3 ME3LA4**	**F603_201.4 S3 MX3LA4**	518	**F603_201.4 P100 BE100LA4**	**F603_201.4 P100 BX100LA4**	519
7.2	2734	2.9	200.0	45000	**F803_200.0 S3 ME3LA4**	**F803_200.0 S3 MX3LA4**	525	**F803_200.0 P100 BE100LA4**	**F803_200.0 P100 BX100LA4**	526
7.3	2680	1.9	196.0	35000	**F703_196.0 S3 ME3LA4**	**F703_196.0 S3 MX3LA4**	522	**F703_196.0 P100 BE100LA4**	**F703_196.0 P100 BX100LA4**	523
7.7	2541	1.1	185.9	20000	**F603_185.9 S3 ME3LA4**	**F603_185.9 S3 MX3LA4**	518	**F603_185.9 P100 BE100LA4**	**F603_185.9 P100 BX100LA4**	519
7.7	2524	3.2	184.6	45000	**F803_184.6 S3 ME3LA4**	**F803_184.6 S3 MX3LA4**	525	**F803_184.6 P100 BE100LA4**	**F803_184.6 P100 BX100LA4**	526
7.9	2474	2.0	180.9	35000	**F703_180.9 S3 ME3LA4**	**F703_180.9 S3 MX3LA4**	522	**F703_180.9 P100 BE100LA4**	**F703_180.9 P100 BX100LA4**	523
8.6	2279	2.2	166.7	35000	**F703_166.7 S3 ME3LA4**	**F703_166.7 S3 MX3LA4**	522	**F703_166.7 P100 BE100LA4**	**F703_166.7 P100 BX100LA4**	523
8.8	2227	1.3	162.9	20000	**F603_162.9 S3 ME3LA4**	**F603_162.9 S3 MX3LA4**	518	**F603_162.9 P100 BE100LA4**	**F603_162.9 P100 BX100LA4**	519
9.3	2103	2.4	153.8	35000	**F703_153.8 S3 ME3LA4**	**F703_153.8 S3 MX3LA4**	522	**F703_153.8 P100 BE100LA4**	**F703_153.8 P100 BX100LA4**	523
9.5	2056	1.4	150.4	20000	**F603_150.4 S3 ME3LA4**	**F603_150.4 S3 MX3LA4**	518	**F603_150.4 P100 BE100LA4**	**F603_150.4 P100 BX100LA4**	519
10.8	1818	2.8	133.0	35000	**F703_133.0 S3 ME3LA4**	**F703_133.0 S3 MX3LA4**	522	**F703_133.0 P100 BE100LA4**	**F703_133.0 P100 BX100LA4**	523
11.0	1784	1.6	130.5	20000	**F603_130.5 S3 ME3LA4**	**F603_130.5 S3 MX3LA4**	518	**F603_130.5 P100 BE100LA4**	**F603_130.5 P100 BX100LA4**	519
11.0	1776	1.0	129.9	12000	**F513_129.9 S3 ME3LA4**	**F513_129.9 S3 MX3LA4**	514	**F513_129.9 P100 BE100LA4**	**F513_129.9 P100 BX100LA4**	515
11.7	1678	3.0	122.7	35000	**F703_122.7 S3 ME3LA4**	**F703_122.7 S3 MX3LA4**	522	**F703_122.7 P100 BE100LA4**	**F703_122.7 P100 BX100LA4**	523
11.9	1647	1.8	120.5	20000	**F603_120.5 S3 ME3LA4**	**F603_120.5 S3 MX3LA4**	518	**F603_120.5 P100 BE100LA4**	**F603_120.5 P100 BX100LA4**	519
13.0	1499	3.3	109.6	35000	**F703_109.6 S3 ME3LA4**	**F703_109.6 S3 MX3LA4**	522	**F703_109.6 P100 BE100LA4**	**F703_109.6 P100 BX100LA4**	523
13.4	1454	2.0	106.4	20000	**F603_106.4 S3 ME3LA4**	**F603_106.4 S3 MX3LA4**	518	**F603_106.4 P100 BE100LA4**	**F603_106.4 P100 BX100LA4**	519
13.6	1437	1.3	105.1	12000	**F513_105.1 S3 ME3LA4**	**F513_105.1 S3 MX3LA4**	514	**F513_105.1 P100 BE100LA4**	**F513_105.1 P100 BX100LA4**	515
14.1	1383	3.6	101.2	35000	**F703_101.2 S3 ME3LA4**	**F703_101.2 S3 MX3LA4**	522	**F703_101.2 P100 BE100LA4**	**F703_101.2 P100 BX100LA4**	523
14.6	1342	2.2	98.2	20000	**F603_98.2 S3 ME3LA4**	**F603_98.2 S3 MX3LA4**	518	**F603_98.2 P100 BE100LA4**	**F603_98.2 P100 BX100LA4**	519
16.8	1160	0.9	84.9	8500	**F413_84.9 S3 ME3LA4**	**F413_84.9 S3 MX3LA4**	510	**F413_84.9 P100 BE100LA4**	**F413_84.9 P100 BX100LA4**	511
17.0	1149	2.5	84.0	20000	**F603_84.0 S3 ME3LA4**	**F603_84.0 S3 MX3LA4**	518	**F603_84.0 P100 BE100LA4**	**F603_84.0 P100 BX100LA4**	519
17.2	1138	1.6	83.2	12000	**F513_83.2 S3 ME3LA4**	**F513_83.2 S3 MX3LA4**	514	**F513_83.2 P100 BE100LA4**	**F513_83.2 P100 BX100LA4**	515
18.4	1060	2.7	77.6	20000	**F603_77.6 S3 ME3LA4**	**F603_77.6 S3 MX3LA4**	518	**F603_77.6 P100 BE100LA4**	**F603_77.6 P100 BX100LA4**	519
20.9	933	3.1	68.3	20000	**F603_68.3 S3 ME3LA4**	**F603_68.3 S3 MX3LA4**	518	**F603_68.3 P100 BE100LA4**	**F603_68.3 P100 BX100LA4**	519
21.5	909	1.2	66.5	8500	**F413_66.5 S3 ME3LA4**	**F413_66.5 S3 MX3LA4**	510	**F413_66.5 P100 BE100LA4**	**F413_66.5 P100 BX100LA4**	511
21.7	900	2.0	65.8	12000	**F513_65.8 S3 ME3LA4**	**F513_65.8 S3 MX3LA4**	514	**F513_65.8 P100 BE100LA4**	**F513_65.8 P100 BX100LA4**	515

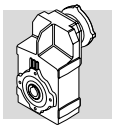

2.2 kW

n_2 min^{-1}	M_2 Nm	S	i	R_{n2} N	IE3		IEC IE3	
1.2	15941	0.9	1204.9	55000			**F904_1205 P100 BXN100LA4**	529
1.3	14715	1.0	1112.3	55000			**F904_1112 P100 BXN100LA4**	529
1.5	13045	1.1	986.0	55000			**F904_986.0 P100 BXN100LA4**	529
1.6	12042	1.2	910.2	55000			**F904_910.2 P100 BXN100LA4**	529
1.8	10233	1.4	773.4	55000			**F904_773.4 P100 BXN100LA4**	529
2.0	9446	1.5	714.0	55000			**F904_714.0 P100 BXN100LA4**	529
2.3	8277	1.7	625.6	55000			**F904_625.6 P100 BXN100LA4**	529
2.3	8082	1.0	610.9	45000			**F804_610.9 P100 BXN100LA4**	526
2.5	7640	1.8	577.5	55000			**F904_577.5 P100 BXN100LA4**	529
2.5	7460	1.1	563.9	45000			**F804_563.9 P100 BXN100LA4**	526
2.9	6556	2.1	495.6	55000			**F904_495.6 P100 BXN100LA4**	529
2.9	6471	1.2	489.1	45000			**F804_489.1 P100 BXN100LA4**	526
3.1	6052	2.3	457.5	55000			**F904_457.5 P100 BXN100LA4**	529
3.2	5973	1.3	451.5	45000			**F804_451.5 P100 BXN100LA4**	526
3.5	5338	0.9	403.5	35000			**F704_403.5 P100 BXN100LA4**	523
3.6	5186	2.7	392.0	55000			**F904_392.0 P100 BXN100LA4**	529
3.7	5069	1.6	383.2	45000			**F804_383.2 P100 BXN100LA4**	526
3.8	4928	1.0	372.5	35000			**F704_372.5 P100 BXN100LA4**	523
4.0	4787	2.9	361.8	55000			**F904_361.8 P100 BXN100LA4**	529
4.0	4679	1.7	353.7	45000			**F804_353.7 P100 BXN100LA4**	526
4.7	4027	1.2	304.3	35000			**F704_304.3 P100 BXN100LA4**	523
4.8	3926	2.0	296.7	45000			**F804_296.7 P100 BXN100LA4**	526
4.9	3852	3.6	291.1	55000			**F904_291.1 P100 BXN100LA4**	529
5.1	3717	1.3	280.9	35000			**F704_280.9 P100 BXN100LA4**	523
5.2	3624	2.2	273.9	45000			**F804_273.9 P100 BXN100LA4**	526
6.1	3223	0.9	235.8	20000			**F603_235.8 P100 BXN100LA4**	519
6.1	3103	1.6	234.6	35000			**F704_234.6 P100 BXN100LA4**	523
6.5	2891	2.8	218.5	45000			**F804_218.5 P100 BXN100LA4**	526
6.6	2975	1.0	217.6	20000			**F603_217.6 P100 BXN100LA4**	519
6.6	2865	1.7	216.5	35000			**F704_216.5 P100 BXN100LA4**	523
7.1	2753	1.1	201.4	20000			**F603_201.4 P100 BXN100LA4**	519
7.2	2734	2.9	200.0	45000			**F803_200.0 P100 BXN100LA4**	526
7.3	2680	1.9	196.0	35000			**F703_196.0 P100 BXN100LA4**	523
7.7	2541	1.1	185.9	20000			**F603_185.9 P100 BXN100LA4**	519
7.7	2524	3.2	184.6	45000			**F803_184.6 P100 BXN100LA4**	526
7.9	2474	2.0	180.9	35000			**F703_180.9 P100 BXN100LA4**	523
8.6	2279	2.2	166.7	35000			**F703_166.7 P100 BXN100LA4**	523
8.8	2227	1.3	162.9	20000			**F603_162.9 P100 BXN100LA4**	519
9.3	2103	2.4	153.8	35000			**F703_153.8 P100 BXN100LA4**	523
9.5	2056	1.4	150.4	20000			**F603_150.4 P100 BXN100LA4**	519
10.8	1818	2.8	133.0	35000			**F703_133.0 P100 BXN100LA4**	523
11.0	1784	1.6	130.5	20000			**F603_130.5 P100 BXN100LA4**	519
11.0	1776	1.0	129.9	12000			**F513_129.9 P100 BXN100LA4**	515
11.7	1678	3.0	122.7	35000			**F703_122.7 P100 BXN100LA4**	523
11.9	1647	1.8	120.5	20000			**F603_120.5 P100 BXN100LA4**	519
13.0	1499	3.3	109.6	35000			**F703_109.6 P100 BXN100LA4**	523
13.4	1454	2.0	106.4	20000			**F603_106.4 P100 BXN100LA4**	519
13.6	1437	1.3	105.1	12000			**F513_105.1 P100 BXN100LA4**	515
14.1	1383	3.6	101.2	35000			**F703_101.2 P100 BXN100LA4**	523
14.6	1342	2.2	98.2	20000			**F603_98.2 P100 BXN100LA4**	519
16.8	1160	0.9	84.9	8500			**F413_84.9 P100 BXN100LA4**	511
17.0	1149	2.5	84.0	20000			**F603_84.0 P100 BXN100LA4**	519
17.2	1138	1.6	83.2	12000			**F513_83.2 P100 BXN100LA4**	515

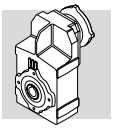

2.2 kW

n_2 min-1	M_2 Nm	S	i	R_{n2} N	IE3		IEC IE3	
1.2	15941	0.9	1204.9	55000			**F904_1205 P100 BXN100LA4**	529
1.3	14715	1.0	1112.3	55000			**F904_1112 P100 BXN100LA4**	529
1.5	13045	1.1	986.0	55000			**F904_986.0 P100 BXN100LA4**	529
1.6	12042	1.2	910.2	55000			**F904_910.2 P100 BXN100LA4**	529
1.8	10233	1.4	773.4	55000			**F904_773.4 P100 BXN100LA4**	529
2.0	9446	1.5	714.0	55000			**F904_714.0 P100 BXN100LA4**	529
2.3	8277	1.7	625.6	55000			**F904_625.6 P100 BXN100LA4**	529
2.3	8082	1.0	610.9	45000			**F804_610.9 P100 BXN100LA4**	526
2.5	7640	1.8	577.5	55000			**F904_577.5 P100 BXN100LA4**	529
2.5	7460	1.1	563.9	45000			**F804_563.9 P100 BXN100LA4**	526
2.9	6556	2.1	495.6	55000			**F904_495.6 P100 BXN100LA4**	529
2.9	6471	1.2	489.1	45000			**F804_489.1 P100 BXN100LA4**	526
3.1	6052	2.3	457.5	55000			**F904_457.5 P100 BXN100LA4**	529
3.2	5973	1.3	451.5	45000			**F804_451.5 P100 BXN100LA4**	526
3.5	5338	0.9	403.5	35000			**F704_403.5 P100 BXN100LA4**	523
3.6	5186	2.7	392.0	55000			**F904_392.0 P100 BXN100LA4**	529
3.7	5069	1.6	383.2	45000			**F804_383.2 P100 BXN100LA4**	526
3.8	4928	1.0	372.5	35000			**F704_372.5 P100 BXN100LA4**	523
4.0	4787	2.9	361.8	55000			**F904_361.8 P100 BXN100LA4**	529
4.0	4679	1.7	353.7	45000			**F804_353.7 P100 BXN100LA4**	526
4.7	4027	1.2	304.3	35000			**F704_304.3 P100 BXN100LA4**	523
4.8	3926	2.0	296.7	45000			**F804_296.7 P100 BXN100LA4**	526
4.9	3852	3.6	291.1	55000			**F904_291.1 P100 BXN100LA4**	529
5.1	3717	1.3	280.9	35000			**F704_280.9 P100 BXN100LA4**	523
5.2	3624	2.2	273.9	45000			**F804_273.9 P100 BXN100LA4**	526
6.1	3223	0.9	235.8	20000			**F603_235.8 P100 BXN100LA4**	519
6.1	3103	1.6	234.6	35000			**F704_234.6 P100 BXN100LA4**	523
6.5	2891	2.8	218.5	45000			**F804_218.5 P100 BXN100LA4**	526
6.6	2975	1.0	217.6	20000			**F603_217.6 P100 BXN100LA4**	519
6.6	2865	1.7	216.5	35000			**F704_216.5 P100 BXN100LA4**	523
7.1	2753	1.1	201.4	20000			**F603_201.4 P100 BXN100LA4**	519
7.2	2734	2.9	200.0	45000			**F803_200.0 P100 BXN100LA4**	526
7.3	2680	1.9	196.0	35000			**F703_196.0 P100 BXN100LA4**	523
7.7	2541	1.1	185.9	20000			**F603_185.9 P100 BXN100LA4**	519
7.7	2524	3.2	184.6	45000			**F803_184.6 P100 BXN100LA4**	526
7.9	2474	2.0	180.9	35000			**F703_180.9 P100 BXN100LA4**	523
8.6	2279	2.2	166.7	35000			**F703_166.7 P100 BXN100LA4**	523
8.8	2227	1.3	162.9	20000			**F603_162.9 P100 BXN100LA4**	519
9.3	2103	2.4	153.8	35000			**F703_153.8 P100 BXN100LA4**	523
9.5	2056	1.4	150.4	20000			**F603_150.4 P100 BXN100LA4**	519
10.8	1818	2.8	133.0	35000			**F703_133.0 P100 BXN100LA4**	523
11.0	1784	1.6	130.5	20000			**F603_130.5 P100 BXN100LA4**	519
11.0	1776	1.0	129.9	12000			**F513_129.9 P100 BXN100LA4**	515
11.7	1678	3.0	122.7	35000			**F703_122.7 P100 BXN100LA4**	523
11.9	1647	1.8	120.5	20000			**F603_120.5 P100 BXN100LA4**	519
13.0	1499	3.3	109.6	35000			**F703_109.6 P100 BXN100LA4**	523
13.4	1454	2.0	106.4	20000			**F603_106.4 P100 BXN100LA4**	519
13.6	1437	1.3	105.1	12000			**F513_105.1 P100 BXN100LA4**	515
14.1	1383	3.6	101.2	35000			**F703_101.2 P100 BXN100LA4**	523
14.6	1342	2.2	98.2	20000			**F603_98.2 P100 BXN100LA4**	519
16.8	1160	0.9	84.9	8500			**F413_84.9 P100 BXN100LA4**	511
17.0	1149	2.5	84.0	20000			**F603_84.0 P100 BXN100LA4**	519
17.2	1138	1.6	83.2	12000			**F513_83.2 P100 BXN100LA4**	515

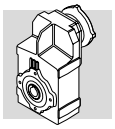

2.2 kW

n_2 min^{-1}	M_2 Nm	S	i	R_{n2} N	IE3		IEC IE3	
18.4	1060	2.7	77.6	20000			**F603_77.6 P100 BXN100LA4**	519
20.9	933	3.1	68.3	20000			**F603_68.3 P100 BXN100LA4**	519
21.5	909	1.2	66.5	8500			**F413_66.5 P100 BXN100LA4**	511
21.7	900	2.0	65.8	12000			**F513_65.8 P100 BXN100LA4**	515
22.7	862	3.4	63.0	20000			**F603_63.0 P100 BXN100LA4**	519
23.7	824	1.3	60.2	8500			**F413_60.2 P100 BXN100LA4**	511
27.8	704	1.5	51.5	8500			**F413_51.5 P100 BXN100LA4**	511
29.2	669	2.7	48.9	12000			**F513_48.9 P100 BXN100LA4**	515
29.8	669	1.6	47.9	8500			**F412_47.9 P100 BXN100LA4**	511
30	650	0.9	47.5	6500			**F313_47.5 P100 BXN100LA4**	507
32	623	1.0	44.6	6500			**F312_44.6 P100 BXN100LA4**	507
35	564	1.1	40.4	6500			**F312_40.4 P100 BXN100LA4**	507
37	533	2.1	38.2	8500			**F412_38.2 P100 BXN100LA4**	511
38	526	1.1	37.7	6500			**F312_37.7 P100 BXN100LA4**	507
39	519	3.3	37.1	12000			**F512_37.1 P100 BXN100LA4**	515
42	480	1.3	34.4	6490			**F312_34.4 P100 BXN100LA4**	507
44	449	0.9	32.2	3620			**F252_32.2 P100 BXN100LA4**	503
47	421	1.4	30.1	6360			**F312_30.1 P100 BXN100LA4**	507
47	421	2.6	30.1	8500			**F412_30.1 P100 BXN100LA4**	511
48	419	1.0	30.0	3300			**F252_30.0 P100 BXN100LA4**	503
52	381	1.6	27.3	6250			**F312_27.3 P100 BXN100LA4**	507
53	380	1.1	27.2	3300			**F252_27.2 P100 BXN100LA4**	503
59	337	3.3	24.1	8400			**F412_24.1 P100 BXN100LA4**	511
60	332	1.2	23.8	3290			**F252_23.8 P100 BXN100LA4**	503
61	327	1.8	23.4	6080			**F312_23.4 P100 BXN100LA4**	507
66	305	1.3	21.8	3270			**F252_21.8 P100 BXN100LA4**	503
68	295	2.0	21.1	5960			**F312_21.1 P100 BXN100LA4**	507
77	260	1.5	18.6	3220			**F252_18.6 P100 BXN100LA4**	503
77	258	2.3	18.5	5790			**F312_18.5 P100 BXN100LA4**	507
85	235	2.6	16.8	5670			**F312_16.8 P100 BXN100LA4**	507
86	232	1.7	16.6	3180			**F252_16.6 P100 BXN100LA4**	503
97	207	1.0	14.8	2190			**F202_14.8 P100 BXN100LA4**	499
99	202	2.0	14.5	3120			**F252_14.5 P100 BXN100LA4**	503
103	195	3.1	13.9	5430			**F312_13.9 P100 BXN100LA4**	507
110	181	2.2	13.0	3070			**F252_13.0 P100 BXN100LA4**	503
112	178	3.4	12.7	5310			**F312_12.7 P100 BXN100LA4**	507
127	157	1.1	11.2	2060			**F202_11.2 P100 BXN100LA4**	499
135	148	2.7	10.6	2960			**F252_10.6 P100 BXN100LA4**	503
143	140	1.2	10.0	2000			**F202_10.0 P100 BXN100LA4**	499
153	131	2.0	9.4	2900			**F252_9.4 P100 BXN100LA4**	503
159	126	3.1	9.0	4830			**F312_9.0 P100 BXN100LA4**	507
164	122	1.3	8.7	1960			**F202_8.7 P100 BXN100LA4**	499
170	117	2.2	8.4	2830			**F252_8.4 P100 BXN100LA4**	503
174	115	3.4	8.2	4720			**F312_8.2 P100 BXN100LA4**	507
183	109	1.3	7.8	1920			**F202_7.8 P100 BXN100LA4**	499
208	96	2.7	6.9	2710			**F252_6.9 P100 BXN100LA4**	503
223	90	1.5	6.4	1840			**F202_6.4 P100 BXN100LA4**	499

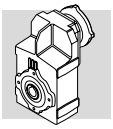

3 kW

n_2 min-1	M_2 Nm	S	i	R_{n2} N	IE2	IE3		IEC IE2	IEC IE3	
1.9	13922	1.0	773.4	55000	**F904_773.4 S3 ME3LB4**	**F904_773.4 S3 MX3LB4**	528	**F904_773.4 P100 BE100LB4**	**F904_773.4 P100 BX100LB4**	529
2.0	12851	1.1	714.0	55000	**F904_714.0 S3 ME3LB4**	**F904_714.0 S3 MX3LB4**	528	**F904_714.0 P100 BE100LB4**	**F904_714.0 P100 BX100LB4**	529
2.3	11261	1.2	625.6	55000	**F904_625.6 S3 ME3LB4**	**F904_625.6 S3 MX3LB4**	528	**F904_625.6 P100 BE100LB4**	**F904_625.6 P100 BX100LB4**	529
2.5	10395	1.3	577.5	55000	**F904_577.5 S3 ME3LB4**	**F904_577.5 S3 MX3LB4**	528	**F904_577.5 P100 BE100LB4**	**F904_577.5 P100 BX100LB4**	529
2.9	8920	1.6	495.6	55000	**F904_495.6 S3 ME3LB4**	**F904_495.6 S3 MX3LB4**	528	**F904_495.6 P100 BE100LB4**	**F904_495.6 P100 BX100LB4**	529
2.9	8804	0.9	489.1	45000	**F804_489.1 S3 ME3LB4**	**F804_489.1 S3 MX3LB4**	525	**F804_489.1 P100 BE100LB4**	**F804_489.1 P100 BX100LB4**	526
3.1	8234	1.7	457.5	55000	**F904_457.5 S3 ME3LB4**	**F904_457.5 S3 MX3LB4**	528	**F904_457.5 P100 BE100LB4**	**F904_457.5 P100 BX100LB4**	529
3.2	8127	1.0	451.5	45000	**F804_451.5 S3 ME3LB4**	**F804_451.5 S3 MX3LB4**	525	**F804_451.5 P100 BE100LB4**	**F804_451.5 P100 BX100LB4**	526
3.7	7056	2.0	392.0	55000	**F904_392.0 S3 ME3LB4**	**F904_392.0 S3 MX3LB4**	528	**F904_392.0 P100 BE100LB4**	**F904_392.0 P100 BX100LB4**	529
3.8	6897	1.2	383.2	45000	**F804_383.2 S3 ME3LB4**	**F804_383.2 S3 MX3LB4**	525	**F804_383.2 P100 BE100LB4**	**F804_383.2 P100 BX100LB4**	526
4.0	6513	2.1	361.8	55000	**F904_361.8 S3 ME3LB4**	**F904_361.8 S3 MX3LB4**	528	**F904_361.8 P100 BE100LB4**	**F904_361.8 P100 BX100LB4**	529
4.1	6366	1.3	353.7	45000	**F804_353.7 S3 ME3LB4**	**F804_353.7 S3 MX3LB4**	525	**F804_353.7 P100 BE100LB4**	**F804_353.7 P100 BX100LB4**	526
4.7	5478	0.9	304.3	35000	**F704_304.3 S3 ME3LB4**	**F704_304.3 S3 MX3LB4**	522	**F704_304.3 P100 BE100LB4**	**F704_304.3 P100 BX100LB4**	523
4.9	5341	1.5	296.7	45000	**F804_296.7 S3 ME3LB4**	**F804_296.7 S3 MX3LB4**	525	**F804_296.7 P100 BE100LB4**	**F804_296.7 P100 BX100LB4**	526
4.9	5240	2.7	291.1	55000	**F904_291.1 S3 ME3LB4**	**F904_291.1 S3 MX3LB4**	528	**F904_291.1 P100 BE100LB4**	**F904_291.1 P100 BX100LB4**	529
5.1	5057	1.0	280.9	35000	**F704_280.9 S3 ME3LB4**	**F704_280.9 S3 MX3LB4**	522	**F704_280.9 P100 BE100LB4**	**F704_280.9 P100 BX100LB4**	523
5.3	4930	1.6	273.9	45000	**F804_273.9 S3 ME3LB4**	**F804_273.9 S3 MX3LB4**	525	**F804_273.9 P100 BE100LB4**	**F804_273.9 P100 BX100LB4**	526
5.4	4837	2.9	268.7	55000	**F904_268.7 S3 ME3LB4**	**F904_268.7 S3 MX3LB4**	528	**F904_268.7 P100 BE100LB4**	**F904_268.7 P100 BX100LB4**	529
6.1	4222	1.2	234.6	35000	**F704_234.6 S3 ME3LB4**	**F704_234.6 S3 MX3LB4**	522	**F704_234.6 P100 BE100LB4**	**F704_234.6 P100 BX100LB4**	523
6.2	4165	3.4	231.4	55000	**F904_231.4 S3 ME3LB4**	**F904_231.4 S3 MX3LB4**	528	**F904_231.4 P100 BE100LB4**	**F904_231.4 P100 BX100LB4**	529
6.6	3933	2.0	218.5	45000	**F804_218.5 S3 ME3LB4**	**F804_218.5 S3 MX3LB4**	525	**F804_218.5 P100 BE100LB4**	**F804_218.5 P100 BX100LB4**	526
6.7	3897	1.3	216.5	35000	**F704_216.5 S3 ME3LB4**	**F704_216.5 S3 MX3LB4**	522	**F704_216.5 P100 BE100LB4**	**F704_216.5 P100 BX100LB4**	523
6.7	3845	3.6	213.6	55000	**F904_213.6 S3 ME3LB4**	**F904_213.6 S3 MX3LB4**	528	**F904_213.6 P100 BE100LB4**	**F904_213.6 P100 BX100LB4**	529
7.2	3720	2.2	200.0	45000	**F803_200.0 S3 ME3LB4**	**F803_200.0 S3 MX3LB4**	525	**F803_200.0 P100 BE100LB4**	**F803_200.0 P100 BX100LB4**	526
7.3	3646	1.4	196.0	35000	**F703_196.0 S3 ME3LB4**	**F703_196.0 S3 MX3LB4**	522	**F703_196.0 P100 BE100LB4**	**F703_196.0 P100 BX100LB4**	523
7.8	3434	2.3	184.6	45000	**F803_184.6 S3 ME3LB4**	**F803_184.6 S3 MX3LB4**	525	**F803_184.6 P100 BE100LB4**	**F803_184.6 P100 BX100LB4**	526
8.0	3366	1.5	180.9	35000	**F703_180.9 S3 ME3LB4**	**F703_180.9 S3 MX3LB4**	522	**F703_180.9 P100 BE100LB4**	**F703_180.9 P100 BX100LB4**	523
8.6	3100	1.6	166.7	35000	**F703_166.7 S3 ME3LB4**	**F703_166.7 S3 MX3LB4**	522	**F703_166.7 P100 BE100LB4**	**F703_166.7 P100 BX100LB4**	523
8.8	3030	1.0	162.9	20000	**F603_162.9 S3 ME3LB4**	**F603_162.9 S3 MX3LB4**	518	**F603_162.9 P100 BE100LB4**	**F603_162.9 P100 BX100LB4**	519
9.0	2980	2.7	160.2	45000	**F803_160.2 S3 ME3LB4**	**F803_160.2 S3 MX3LB4**	525	**F803_160.2 P100 BE100LB4**	**F803_160.2 P100 BX100LB4**	526
9.4	2862	1.7	153.8	35000	**F703_153.8 S3 ME3LB4**	**F703_153.8 S3 MX3LB4**	522	**F703_153.8 P100 BE100LB4**	**F703_153.8 P100 BX100LB4**	523
9.6	2797	1.0	150.4	20000	**F603_150.4 S3 ME3LB4**	**F603_150.4 S3 MX3LB4**	518	**F603_150.4 P100 BE100LB4**	**F603_150.4 P100 BX100LB4**	519
9.7	2751	2.9	147.9	45000	**F803_147.9 S3 ME3LB4**	**F803_147.9 S3 MX3LB4**	525	**F803_147.9 P100 BE100LB4**	**F803_147.9 P100 BX100LB4**	526
10.8	2473	2.0	133.0	35000	**F703_133.0 S3 ME3LB4**	**F703_133.0 S3 MX3LB4**	522	**F703_133.0 P100 BE100LB4**	**F703_133.0 P100 BX100LB4**	523
10.9	2468	3.2	132.7	45000	**F803_132.7 S3 ME3LB4**	**F803_132.7 S3 MX3LB4**	525	**F803_132.7 P100 BE100LB4**	**F803_132.7 P100 BX100LB4**	526
11.0	2427	1.2	130.5	20000	**F603_130.5 S3 ME3LB4**	**F603_130.5 S3 MX3LB4**	518	**F603_130.5 P100 BE100LB4**	**F603_130.5 P100 BX100LB4**	519
11.7	2283	2.2	122.7	35000	**F703_122.7 S3 ME3LB4**	**F703_122.7 S3 MX3LB4**	522	**F703_122.7 P100 BE100LB4**	**F703_122.7 P100 BX100LB4**	523
12.0	2240	1.3	120.5	20000	**F603_120.5 S3 ME3LB4**	**F603_120.5 S3 MX3LB4**	518	**F603_120.5 P100 BE100LB4**	**F603_120.5 P100 BX100LB4**	519
13.1	2039	2.5	109.6	35000	**F703_109.6 S3 ME3LB4**	**F703_109.6 S3 MX3LB4**	522	**F703_109.6 P100 BE100LB4**	**F703_109.6 P100 BX100LB4**	523
13.5	1979	1.5	106.4	20000	**F603_106.4 S3 ME3LB4**	**F603_106.4 S3 MX3LB4**	518	**F603_106.4 P100 BE100LB4**	**F603_106.4 P100 BX100LB4**	519
13.7	1955	0.9	105.1	12000	**F513_105.1 S3 ME3LB4**	**F513_105.1 S3 MX3LB4**	514	**F513_105.1 P100 BE100LB4**	**F513_105.1 P100 BX100LB4**	515
14.2	1882	2.7	101.2	35000	**F703_101.2 S3 ME3LB4**	**F703_101.2 S3 MX3LB4**	522	**F703_101.2 P100 BE100LB4**	**F703_101.2 P100 BX100LB4**	523
14.7	1826	1.6	98.2	20000	**F603_98.2 S3 ME3LB4**	**F603_98.2 S3 MX3LB4**	518	**F603_98.2 P100 BE100LB4**	**F603_98.2 P100 BX100LB4**	519
15.6	1721	2.9	92.5	35000	**F703_92.5 S3 ME3LB4**	**F703_92.5 S3 MX3LB4**	522	**F703_92.5 P100 BE100LB4**	**F703_92.5 P100 BX100LB4**	523
16.9	1588	3.1	85.4	35000	**F703_85.4 S3 ME3LB4**	**F703_85.4 S3 MX3LB4**	522	**F703_85.4 P100 BE100LB4**	**F703_85.4 P100 BX100LB4**	523
17.1	1563	1.9	84.0	20000	**F603_84.0 S3 ME3LB4**	**F603_84.0 S3 MX3LB4**	518	**F603_84.0 P100 BE100LB4**	**F603_84.0 P100 BX100LB4**	519
17.3	1548	1.2	83.2	12000	**F513_83.2 S3 ME3LB4**	**F513_83.2 S3 MX3LB4**	514	**F513_83.2 P100 BE100LB4**	**F513_83.2 P100 BX100LB4**	515
18.6	1443	2.0	77.6	20000	**F603_77.6 S3 ME3LB4**	**F603_77.6 S3 MX3LB4**	518	**F603_77.6 P100 BE100LB4**	**F603_77.6 P100 BX100LB4**	519
19.6	1368	3.7	73.6	35000	**F703_73.6 S3 ME3LB4**	**F703_73.6 S3 MX3LB4**	522	**F703_73.6 P100 BE100LB4**	**F703_73.6 P100 BX100LB4**	523
21.1	1270	2.3	68.3	20000	**F603_68.3 S3 ME3LB4**	**F603_68.3 S3 MX3LB4**	518	**F603_68.3 P100 BE100LB4**	**F603_68.3 P100 BX100LB4**	519
21.9	1225	1.5	65.8	12000	**F513_65.8 S3 ME3LB4**	**F513_65.8 S3 MX3LB4**	514	**F513_65.8 P100 BE100LB4**	**F513_65.8 P100 BX100LB4**	515
22.8	1172	2.5	63.0	20000	**F603_63.0 S3 ME3LB4**	**F603_63.0 S3 MX3LB4**	518	**F603_63.0 P100 BE100LB4**	**F603_63.0 P100 BX100LB4**	519
23.9	1121	1.0	60.2	8500	**F413_60.2 S3 ME3LB4**	**F413_60.2 S3 MX3LB4**	510	**F413_60.2 P100 BE100LB4**	**F413_60.2 P100 BX100LB4**	511
27.8	964	3.0	51.8	20000	**F603_51.8 S3 ME3LB4**	**F603_51.8 S3 MX3LB4**	518	**F603_51.8 P100 BE100LB4**	**F603_51.8 P100 BX100LB4**	519
28.0	958	1.1	51.5	8500	**F413_51.5 S3 ME3LB4**	**F413_51.5 S3 MX3LB4**	510	**F413_51.5 P100 BE100LB4**	**F413_51.5 P100 BX100LB4**	511
29.4	910	2.0	48.9	12000	**F513_48.9 S3 ME3LB4**	**F513_48.9 S3 MX3LB4**	514	**F513_48.9 P100 BE100LB4**	**F513_48.9 P100 BX100LB4**	515
30	911	1.2	47.9	8500	**F412_47.9 S3 ME3LB4**	**F412_47.9 S3 MX3LB4**	510	**F412_47.9 P100 BE100LB4**	**F412_47.9 P100 BX100LB4**	511
30	890	3.3	47.8	20000	**F603_47.8 S3 ME3LB4**	**F603_47.8 S3 MX3LB4**	518	**F603_47.8 P100 BE100LB4**	**F603_47.8 P100 BX100LB4**	519
38	725	1.5	38.2	8500	**F412_38.2 S3 ME3LB4**	**F412_38.2 S3 MX3LB4**	510	**F412_38.2 P100 BE100LB4**	**F412_38.2 P100 BX100LB4**	511
39	706	2.4	37.1	11800	**F512_37.1 S3 ME3LB4**	**F512_37.1 S3 MX3LB4**	514	**F512_37.1 P100 BE100LB4**	**F512_37.1 P100 BX100LB4**	515
42	653	0.9	34.4	5810	**F312_34.4 S3 ME3LB4**	**F312_34.4 S3 MX3LB4**	506	**F312_34.4 P100 BE100LB4**	**F312_34.4 P100 BX100LB4**	507
48	572	1.0	30.1	5770	**F312_30.1 S3 ME3LB4**	**F312_30.1 S3 MX3LB4**	506	**F312_30.1 P100 BE100LB4**	**F312_30.1 P100 BX100LB4**	507
48	572	1.9	30.1	8290	**F412_30.1 S3 ME3LB4**	**F412_30.1 S3 MX3LB4**	510	**F412_30.1 P100 BE100LB4**	**F412_30.1 P100 BX100LB4**	511
48	571	3.0	30.0	11200	**F512_30.0 S3 ME3LB4**	**F512_30.0 S3 MX3LB4**	514	**F512_30.0 P100 BE100LB4**	**F512_30.0 P100 BX100LB4**	515
53	518	1.2	27.3	5720	**F312_27.3 S3 ME3LB4**	**F312_27.3 S3 MX3LB4**	506	**F312_27.3 P100 BE100LB4**	**F312_27.3 P100 BX100LB4**	507

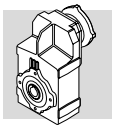

3 kW

n_2 min-1	M_2 Nm	S	i	R_{n2} N	IE2	IE3		IEC IE2	IEC IE3	
60	458	2.4	24.1	7960	**F412_24.1 S3 ME3LB4**	**F412_24.1 S3 MX3LB4**	510	**F412_24.1 P100 BE100LB4**	**F412_24.1 P100 BX100LB4**	511
61	451	0.9	23.8	3100	**F252_23.8 S3 ME3LB4**	**F252_23.8 S3 MX3LB4**	502	**F252_23.8 P100 BE100LB4**	**F252_23.8 P100 BX100LB4**	503
62	444	1.4	23.4	5620	**F312_23.4 S3 ME3LB4**	**F312_23.4 S3 MX3LB4**	506	**F312_23.4 P100 BE100LB4**	**F312_23.4 P100 BX100LB4**	507
66	415	1.0	21.8	2800	**F252_21.8 S3 ME3LB4**	**F252_21.8 S3 MX3LB4**	502	**F252_21.8 P100 BE100LB4**	**F252_21.8 P100 BX100LB4**	503
68	401	1.5	21.1	5540	**F312_21.1 S3 ME3LB4**	**F312_21.1 S3 MX3LB4**	506	**F312_21.1 P100 BE100LB4**	**F312_21.1 P100 BX100LB4**	507
76	359	3.0	18.9	7560	**F412_18.9 S3 ME3LB4**	**F412_18.9 S3 MX3LB4**	510	**F412_18.9 P100 BE100LB4**	**F412_18.9 P100 BX100LB4**	511
77	354	1.1	18.6	2830	**F252_18.6 S3 ME3LB4**	**F252_18.6 S3 MX3LB4**	502	**F252_18.6 P100 BE100LB4**	**F252_18.6 P100 BX100LB4**	503
78	351	1.7	18.5	5430	**F312_18.5 S3 ME3LB4**	**F312_18.5 S3 MX3LB4**	506	**F312_18.5 P100 BE100LB4**	**F312_18.5 P100 BX100LB4**	507
84	325	3.2	17.1	7400	**F412_17.1 S3 ME3LB4**	**F412_17.1 S3 MX3LB4**	510	**F412_17.1 P100 BE100LB4**	**F412_17.1 P100 BX100LB4**	511
86	319	1.9	16.8	5340	**F312_16.8 S3 ME3LB4**	**F312_16.8 S3 MX3LB4**	506	**F312_16.8 P100 BE100LB4**	**F312_16.8 P100 BX100LB4**	507
87	316	1.3	16.6	2830	**F252_16.6 S3 ME3LB4**	**F252_16.6 S3 MX3LB4**	502	**F252_16.6 P100 BE100LB4**	**F252_16.6 P100 BX100LB4**	503
100	275	1.5	14.5	2810	**F252_14.5 S3 ME3LB4**	**F252_14.5 S3 MX3LB4**	502	**F252_14.5 P100 BE100LB4**	**F252_14.5 P100 BX100LB4**	503
103	265	2.3	13.9	5150	**F312_13.9 S3 ME3LB4**	**F312_13.9 S3 MX3LB4**	506	**F312_13.9 P100 BE100LB4**	**F312_13.9 P100 BX100LB4**	507
111	247	1.6	13.0	2790	**F252_13.0 S3 ME3LB4**	**F252_13.0 S3 MX3LB4**	502	**F252_13.0 P100 BE100LB4**	**F252_13.0 P100 BX100LB4**	503
113	242	2.5	12.7	5060	**F312_12.7 S3 ME3LB4**	**F312_12.7 S3 MX3LB4**	506	**F312_12.7 P100 BE100LB4**	**F312_12.7 P100 BX100LB4**	507
134	204	2.9	10.7	4880	**F312_10.7 S3 ME3LB4**	**F312_10.7 S3 MX3LB4**	506	**F312_10.7 P100 BE100LB4**	**F312_10.7 P100 BX100LB4**	507
136	202	2.0	10.6	2730	**F252_10.6 S3 ME3LB4**	**F252_10.6 S3 MX3LB4**	502	**F252_10.6 P100 BE100LB4**	**F252_10.6 P100 BX100LB4**	503
154	178	1.5	9.4	2710	**F252_9.4 S3 ME3LB4**	**F252_9.4 S3 MX3LB4**	502	**F252_9.4 P100 BE100LB4**	**F252_9.4 P100 BX100LB4**	503
160	171	2.3	9.0	4650	**F312_9.0 S3 ME3LB4**	**F312_9.0 S3 MX3LB4**	506	**F312_9.0 P100 BE100LB4**	**F312_9.0 P100 BX100LB4**	507
165	166	0.9	8.7	1820	**F202_8.7 S3 ME3LB4**	**F202_8.7 S3 MX3LB4**	498	**F202_8.7 P100 BE100LB4**	**F202_8.7 P100 BX100LB4**	499
172	159	1.6	8.4	2660	**F252_8.4 S3 ME3LB4**	**F252_8.4 S3 MX3LB4**	502	**F252_8.4 P100 BE100LB4**	**F252_8.4 P100 BX100LB4**	503
175	156	2.5	8.2	4550	**F312_8.2 S3 ME3LB4**	**F312_8.2 S3 MX3LB4**	506	**F312_8.2 P100 BE100LB4**	**F312_8.2 P100 BX100LB4**	507
184	149	1.0	7.8	1790	**F202_7.8 S3 ME3LB4**	**F202_7.8 S3 MX3LB4**	498	**F202_7.8 P100 BE100LB4**	**F202_7.8 P100 BX100LB4**	499
207	132	3.0	6.9	4360	**F312_6.9 S3 ME3LB4**	**F312_6.9 S3 MX3LB4**	506	**F312_6.9 P100 BE100LB4**	**F312_6.9 P100 BX100LB4**	507
210	131	2.0	6.9	2560	**F252_6.9 S3 ME3LB4**	**F252_6.9 S3 MX3LB4**	502	**F252_6.9 P100 BE100LB4**	**F252_6.9 P100 BX100LB4**	503
222	123	2.9	13.0	2510	**F252_13.0 S3 ME3LB2**		502	**F252_13.0 P100 BE100L2**		503
225	122	1.1	6.4	1730	**F202_6.4 S3 ME3LB4**	**F202_6.4 S3 MX3LB4**	498	**F202_6.4 P100 BE100LB4**	**F202_6.4 P100 BX100LB4**	499
256	106	1.3	11.2	1680	**F202_11.2 S3 ME3LB2**		498	**F202_11.2 P100 BE100L2**		499
271	100	3.2	10.6	2410	**F252_10.6 S3 ME3LB2**		502	**F252_10.6 P100 BE100L2**		503
308	88	3.0	9.4	2350	**F252_9.4 S3 ME3LB2**		502	**F252_9.4 P100 BE100L2**		503
330	83	1.5	8.7	1600	**F202_8.7 S3 ME3LB2**		498	**F202_8.7 P100 BE100L2**		499
343	79	3.3	8.4	2290	**F252_8.4 S3 ME3LB2**		502	**F252_8.4 P100 BE100L2**		503
368	74	1.6	7.8	1560	**F202_7.8 S3 ME3LB2**		498	**F202_7.8 P100 BE100L2**		499
449	61	1.7	6.4	1480	**F202_6.4 S3 ME3LB2**		498	**F202_6.4 P100 BE100L2**		499

3 kW

n_2 min-1	M_2 Nm	S	i	R_{n2} N	IE3		IEC IE3	
1.9	13922	1.0	773.4	55000			**F904_773.4 P100 BXN100LB4**	529
2.0	12851	1.1	714.0	55000			**F904_714.0 P100 BXN100LB4**	529
2.3	11261	1.2	625.6	55000			**F904_625.6 P100 BXN100LB4**	529
2.5	10395	1.3	577.5	55000			**F904_577.5 P100 BXN100LB4**	529
2.9	8920	1.6	495.6	55000			**F904_495.6 P100 BXN100LB4**	529
2.9	8804	0.9	489.1	45000			**F804_489.1 P100 BXN100LB4**	526
3.1	8234	1.7	457.5	55000			**F904_457.5 P100 BXN100LB4**	529
3.2	8127	1.0	451.5	45000			**F804_451.5 P100 BXN100LB4**	526
3.7	7056	2.0	392.0	55000			**F904_392.0 P100 BXN100LB4**	529
3.8	6897	1.2	383.2	45000			**F804_383.2 P100 BXN100LB4**	526
4.0	6513	2.1	361.8	55000			**F904_361.8 P100 BXN100LB4**	529
4.1	6366	1.3	353.7	45000			**F804_353.7 P100 BXN100LB4**	526
4.7	5478	0.9	304.3	35000			**F704_304.3 P100 BXN100LB4**	523
4.9	5341	1.5	296.7	45000			**F804_296.7 P100 BXN100LB4**	526
4.9	5240	2.7	291.1	55000			**F904_291.1 P100 BXN100LB4**	529
5.1	5057	1.0	280.9	35000			**F704_280.9 P100 BXN100LB4**	523
5.3	4930	1.6	273.9	45000			**F804_273.9 P100 BXN100LB4**	526
5.4	4837	2.9	268.7	55000			**F904_268.7 P100 BXN100LB4**	529
6.1	4222	1.2	234.6	35000			**F704_234.6 P100 BXN100LB4**	523
6.2	4165	3.4	231.4	55000			**F904_231.4 P100 BXN100LB4**	529
6.6	3933	2.0	218.5	45000			**F804_218.5 P100 BXN100LB4**	526

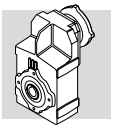

3 kW

n_2 min-1	M_2 Nm	S	i	R_{n2} N	 IE3		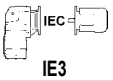 IE3	
6.7	3897	1.3	216.5	35000			**F704_216.5 P100 BXN100LB4**	523
6.7	3845	3.6	213.6	55000			**F904_213.6 P100 BXN100LB4**	529
7.2	3720	2.2	200.0	45000			**F803_200.0 P100 BXN100LB4**	526
7.3	3646	1.4	196.0	35000			**F703_196.0 P100 BXN100LB4**	523
7.8	3434	2.3	184.6	45000			**F803_184.6 P100 BXN100LB4**	526
8.0	3366	1.5	180.9	35000			**F703_180.9 P100 BXN100LB4**	523
8.6	3100	1.6	166.7	35000			**F703_166.7 P100 BXN100LB4**	523
8.8	3030	1.0	162.9	20000			**F603_162.9 P100 BXN100LB4**	519
9.0	2980	2.7	160.2	45000			**F803_160.2 P100 BXN100LB4**	526
9.4	2862	1.7	153.8	35000			**F703_153.8 P100 BXN100LB4**	523
9.6	2797	1.0	150.4	20000			**F603_150.4 P100 BXN100LB4**	519
9.7	2751	2.9	147.9	45000			**F803_147.9 P100 BXN100LB4**	526
10.8	2473	2.0	133.0	35000			**F703_133.0 P100 BXN100LB4**	523
10.9	2468	3.2	132.7	45000			**F803_132.7 P100 BXN100LB4**	526
11.0	2427	1.2	130.5	20000			**F603_130.5 P100 BXN100LB4**	519
11.7	2283	2.2	122.7	35000			**F703_122.7 P100 BXN100LB4**	523
12.0	2240	1.3	120.5	20000			**F603_120.5 P100 BXN100LB4**	519
13.1	2039	2.5	109.6	35000			**F703_109.6 P100 BXN100LB4**	523
13.5	1979	1.5	106.4	20000			**F603_106.4 P100 BXN100LB4**	519
13.7	1955	0.9	105.1	12000			**F513_105.1 P100 BXN100LB4**	515
14.2	1882	2.7	101.2	35000			**F703_101.2 P100 BXN100LB4**	523
14.7	1826	1.6	98.2	20000			**F603_98.2 P100 BXN100LB4**	519
15.6	1721	2.9	92.5	35000			**F703_92.5 P100 BXN100LB4**	523
16.9	1588	3.1	85.4	35000			**F703_85.4 P100 BXN100LB4**	523
17.1	1563	1.9	84.0	20000			**F603_84.0 P100 BXN100LB4**	519
17.3	1548	1.2	83.2	12000			**F513_83.2 P100 BXN100LB4**	515
18.6	1443	2.0	77.6	20000			**F603_77.6 P100 BXN100LB4**	519
19.6	1368	3.7	73.6	35000			**F703_73.6 P100 BXN100LB4**	523
21.1	1270	2.3	68.3	20000			**F603_68.3 P100 BXN100LB4**	519
21.9	1225	1.5	65.8	12000			**F513_65.8 P100 BXN100LB4**	515
22.8	1172	2.5	63.0	20000			**F603_63.0 P100 BXN100LB4**	519
23.9	1121	1.0	60.2	8500			**F413_60.2 P100 BXN100LB4**	511
27.8	964	3.0	51.8	20000			**F603_51.8 P100 BXN100LB4**	519
28.0	958	1.1	51.5	8500			**F413_51.5 P100 BXN100LB4**	511
29.4	910	2.0	48.9	12000			**F513_48.9 P100 BXN100LB4**	515
30	911	1.2	47.9	8500			**F412_47.9 P100 BXN100LB4**	511
30	890	3.3	47.8	20000			**F603_47.8 P100 BXN100LB4**	519
38	725	1.5	38.2	8500			**F412_38.2 P100 BXN100LB4**	511
39	706	2.4	37.1	11800			**F512_37.1 P100 BXN100LB4**	515
42	653	0.9	34.4	5810			**F312_34.4 P100 BXN100LB4**	507
48	572	1.0	30.1	5770			**F312_30.1 P100 BXN100LB4**	507
48	572	1.9	30.1	8290			**F412_30.1 P100 BXN100LB4**	511
48	571	3.0	30.0	11200			**F512_30.0 P100 BXN100LB4**	515
53	518	1.2	27.3	5720			**F312_27.3 P100 BXN100LB4**	507
60	458	2.4	24.1	7960			**F412_24.1 P100 BXN100LB4**	511
61	451	0.9	23.8	3100			**F252_23.8 P100 BXN100LB4**	503
62	444	1.4	23.4	5620			**F312_23.4 P100 BXN100LB4**	507
66	415	1.0	21.8	2800			**F252_21.8 P100 BXN100LB4**	503
68	401	1.5	21.1	5540			**F312_21.1 P100 BXN100LB4**	507
76	359	3.0	18.9	7560			**F412_18.9 P100 BXN100LB4**	511
77	354	1.1	18.6	2830			**F252_18.6 P100 BXN100LB4**	503
78	351	1.7	18.5	5430			**F312_18.5 P100 BXN100LB4**	507
84	325	3.2	17.1	7400			**F412_17.1 P100 BXN100LB4**	511
86	319	1.9	16.8	5340			**F312_16.8 P100 BXN100LB4**	507
87	316	1.3	16.6	2830			**F252_16.6 P100 BXN100LB4**	503
100	275	1.5	14.5	2810			**F252_14.5 P100 BXN100LB4**	503
103	265	2.3	13.9	5150			**F312_13.9 P100 BXN100LB4**	507
111	247	1.6	13.0	2790			**F252_13.0 P100 BXN100LB4**	503
113	242	2.5	12.7	5060			**F312_12.7 P100 BXN100LB4**	507
134	204	2.9	10.7	4880			**F312_10.7 P100 BXN100LB4**	507
136	202	2.0	10.6	2730			**F252_10.6 P100 BXN100LB4**	503
154	178	1.5	9.4	2710			**F252_9.4 P100 BXN100LB4**	503
160	171	2.3	9.0	4650			**F312_9.0 P100 BXN100LB4**	507
165	166	0.9	8.7	1820			**F202_8.7 P100 BXN100LB4**	499
172	159	1.6	8.4	2660			**F252_8.4 P100 BXN100LB4**	503

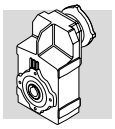

3 kW

n_2 min-1	M_2 Nm	S	i	R_{n2} N	IE3		IEC IE3	
175	156	2.5	8.2	4550			**F312_8.2 P100 BXN100LB4**	507
184	149	1.0	7.8	1790			**F202_7.8 P100 BXN100LB4**	499
207	132	3.0	6.9	4360			**F312_6.9 P100 BXN100LB4**	507
210	131	2.0	6.9	2560			**F252_6.9 P100 BXN100LB4**	503
225	122	1.1	6.4	1730			**F202_6.4 P100 BXN100LB4**	499

4 kW

n_2 min-1	M_2 Nm	S	i	R_{n2} N	IE2	IE3		IEC IE2	IEC IE3	
2.3	15202	0.9	625.6	55000	**F904_625.6 S4 ME4SA4**	**F904_625.6 S4 MX4SA4**	528	**F904_625.6 P112 BE112M4**	**F904_625.6 P112 BX112M4**	529
2.5	14033	1.0	577.5	55000	**F904_577.5 S4 ME4SA4**	**F904_577.5 S4 MX4SA4**	528	**F904_577.5 P112 BE112M4**	**F904_577.5 P112 BX112M4**	529
2.9	12042	1.2	495.6	55000	**F904_495.6 S4 ME4SA4**	**F904_495.6 S4 MX4SA4**	528	**F904_495.6 P112 BE112M4**	**F904_495.6 P112 BX112M4**	529
3.1	11116	1.3	457.5	55000	**F904_457.5 S4 ME4SA4**	**F904_457.5 S4 MX4SA4**	528	**F904_457.5 P112 BE112M4**	**F904_457.5 P112 BX112M4**	529
3.7	9526	1.5	392.0	55000	**F904_392.0 S4 ME4SA4**	**F904_392.0 S4 MX4SA4**	528	**F904_392.0 P112 BE112M4**	**F904_392.0 P112 BX112M4**	529
4.0	8793	1.6	361.8	55000	**F904_361.8 S4 ME4SA4**	**F904_361.8 S4 MX4SA4**	528	**F904_361.8 P112 BE112M4**	**F904_361.8 P112 BX112M4**	529
4.1	8594	0.9	353.7	45000	**F804_353.7 S4 ME4SA4**	**F804_353.7 S4 MX4SA4**	525	**F804_353.7 P112 BE112M4**	**F804_353.7 P112 BX112M4**	526
4.9	7210	1.1	296.7	45000	**F804_296.7 S4 ME4SA4**	**F804_296.7 S4 MX4SA4**	525	**F804_296.7 P112 BE112M4**	**F804_296.7 P112 BX112M4**	526
4.9	7074	2.0	291.1	55000	**F904_291.1 S4 ME4SA4**	**F904_291.1 S4 MX4SA4**	528	**F904_291.1 P112 BE112M4**	**F904_291.1 P112 BX112M4**	529
5.3	6656	1.2	273.9	45000	**F804_273.9 S4 ME4SA4**	**F804_273.9 S4 MX4SA4**	525	**F804_273.9 P112 BE112M4**	**F804_273.9 P112 BX112M4**	526
5.4	6530	2.1	268.7	55000	**F904_268.7 S4 ME4SA4**	**F904_268.7 S4 MX4SA4**	528	**F904_268.7 P112 BE112M4**	**F904_268.7 P112 BX112M4**	529
6.1	5700	0.9	234.6	35000	**F704_234.6 S4 ME4SA4**	**F704_234.6 S4 MX4SA4**	522	**F704_234.6 P112 BE112M4**	**F704_234.6 P112 BX112M4**	523
6.2	5623	2.5	231.4	55000	**F904_231.4 S4 ME4SA4**	**F904_231.4 S4 MX4SA4**	528	**F904_231.4 P112 BE112M4**	**F904_231.4 P112 BX112M4**	529
6.6	5309	1.5	218.5	45000	**F804_218.5 S4 ME4SA4**	**F804_218.5 S4 MX4SA4**	525	**F804_218.5 P112 BE112M4**	**F804_218.5 P112 BX112M4**	526
6.7	5262	1.0	216.5	35000	**F704_216.5 S4 ME4SA4**	**F704_216.5 S4 MX4SA4**	522	**F704_216.5 P112 BE112M4**	**F704_216.5 P112 BX112M4**	523
6.7	5190	2.7	213.6	55000	**F904_213.6 S4 ME4SA4**	**F904_213.6 S4 MX4SA4**	528	**F904_213.6 P112 BE112M4**	**F904_213.6 P112 BX112M4**	529
7.2	5022	1.6	200.0	45000	**F803_200.0 S4 ME4SA4**	**F803_200.0 S4 MX4SA4**	525	**F803_200.0 P112 BE112M4**	**F803_200.0 P112 BX112M4**	526
7.3	4922	1.0	196.0	35000	**F703_196.0 S4 ME4SA4**	**F703_196.0 S4 MX4SA4**	522	**F703_196.0 P112 BE112M4**	**F703_196.0 P112 BX112M4**	523
7.4	4875	2.9	194.2	55000	**F903_194.2 S4 ME4SA4**	**F903_194.2 S4 MX4SA4**	528	**F903_194.2 P112 BE112M4**	**F903_194.2 P112 BX112M4**	529
7.8	4636	1.7	184.6	45000	**F803_184.6 S4 ME4SA4**	**F803_184.6 S4 MX4SA4**	525	**F803_184.6 P112 BE112M4**	**F803_184.6 P112 BX112M4**	526
8.0	4544	1.1	180.9	35000	**F703_180.9 S4 ME4SA4**	**F703_180.9 S4 MX4SA4**	522	**F703_180.9 P112 BE112M4**	**F703_180.9 P112 BX112M4**	523
8.0	4500	3.1	179.2	55000	**F903_179.2 S4 ME4SA4**	**F903_179.2 S4 MX4SA4**	528	**F903_179.2 P112 BE112M4**	**F903_179.2 P112 BX112M4**	529
8.6	4185	1.2	166.7	35000	**F703_166.7 S4 ME4SA4**	**F703_166.7 S4 MX4SA4**	522	**F703_166.7 P112 BE112M4**	**F703_166.7 P112 BX112M4**	523
8.8	4089	3.4	162.8	55000	**F903_162.8 S4 ME4SA4**	**F903_162.8 S4 MX4SA4**	528	**F903_162.8 P112 BE112M4**	**F903_162.8 P112 BX112M4**	529
9.0	4023	2.0	160.2	45000	**F803_160.2 S4 ME4SA4**	**F803_160.2 S4 MX4SA4**	525	**F803_160.2 P112 BE112M4**	**F803_160.2 P112 BX112M4**	526
9.4	3863	1.3	153.8	35000	**F703_153.8 S4 ME4SA4**	**F703_153.8 S4 MX4SA4**	522	**F703_153.8 P112 BE112M4**	**F703_153.8 P112 BX112M4**	523
9.7	3714	2.2	147.9	45000	**F803_147.9 S4 ME4SA4**	**F803_147.9 S4 MX4SA4**	525	**F803_147.9 P112 BE112M4**	**F803_147.9 P112 BX112M4**	526
10.8	3338	1.5	133.0	35000	**F703_133.0 S4 ME4SA4**	**F703_133.0 S4 MX4SA4**	522	**F703_133.0 P112 BE112M4**	**F703_133.0 P112 BX112M4**	523
10.9	3332	2.4	132.7	45000	**F803_132.7 S4 ME4SA4**	**F803_132.7 S4 MX4SA4**	525	**F803_132.7 P112 BE112M4**	**F803_132.7 P112 BX112M4**	526
11.0	3277	0.9	130.5	20000	**F603_130.5 S4 ME4SA4**	**F603_130.5 S4 MX4SA4**	518	**F603_130.5 P112 BE112M4**	**F603_130.5 P112 BX112M4**	519
11.7	3082	1.6	122.7	35000	**F703_122.7 S4 ME4SA4**	**F703_122.7 S4 MX4SA4**	522	**F703_122.7 P112 BE112M4**	**F703_122.7 P112 BX112M4**	523
11.8	3076	2.6	122.5	45000	**F803_122.5 S4 ME4SA4**	**F803_122.5 S4 MX4SA4**	525	**F803_122.5 P112 BE112M4**	**F803_122.5 P112 BX112M4**	526
12.0	3025	1.0	120.5	20000	**F603_120.5 S4 ME4SA4**	**F603_120.5 S4 MX4SA4**	518	**F603_120.5 P112 BE112M4**	**F603_120.5 P112 BX112M4**	519
12.7	2856	2.8	113.8	45000	**F803_113.8 S4 ME4SA4**	**F803_113.8 S4 MX4SA4**	525	**F803_113.8 P112 BE112M4**	**F803_113.8 P112 BX112M4**	526
13.1	2752	1.8	109.6	35000	**F703_109.6 S4 ME4SA4**	**F703_109.6 S4 MX4SA4**	522	**F703_109.6 P112 BE112M4**	**F703_109.6 P112 BX112M4**	523
13.5	2671	1.1	106.4	20000	**F603_106.4 S4 ME4SA4**	**F603_106.4 S4 MX4SA4**	518	**F603_106.4 P112 BE112M4**	**F603_106.4 P112 BX112M4**	519
13.7	2637	3.0	105.0	45000	**F803_105.0 S4 ME4SA4**	**F803_105.0 S4 MX4SA4**	525	**F803_105.0 P112 BE112M4**	**F803_105.0 P112 BX112M4**	526
14.2	2541	2.0	101.2	35000	**F703_101.2 S4 ME4SA4**	**F703_101.2 S4 MX4SA4**	522	**F703_101.2 P112 BE112M4**	**F703_101.2 P112 BX112M4**	523
14.7	2466	1.2	98.2	20000	**F603_98.2 S4 ME4SA4**	**F603_98.2 S4 MX4SA4**	518	**F603_98.2 P112 BE112M4**	**F603_98.2 P112 BX112M4**	519
15.6	2323	2.2	92.5	35000	**F703_92.5 S4 ME4SA4**	**F703_92.5 S4 MX4SA4**	522	**F703_92.5 P112 BE112M4**	**F703_92.5 P112 BX112M4**	523
16.9	2144	2.3	85.4	35000	**F703_85.4 S4 ME4SA4**	**F703_85.4 S4 MX4SA4**	522	**F703_85.4 P112 BE112M4**	**F703_85.4 P112 BX112M4**	523
17.1	2110	1.4	84.0	20000	**F603_84.0 S4 ME4SA4**	**F603_84.0 S4 MX4SA4**	518	**F603_84.0 P112 BE112M4**	**F603_84.0 P112 BX112M4**	519
18.6	1947	1.5	77.6	20000	**F603_77.6 S4 ME4SA4**	**F603_77.6 S4 MX4SA4**	518	**F603_77.6 P112 BE112M4**	**F603_77.6 P112 BX112M4**	519
19.6	1847	2.7	73.6	35000	**F703_73.6 S4 ME4SA4**	**F703_73.6 S4 MX4SA4**	522			
21.1	1715	1.7	68.3	20000	**F603_68.3 S4 ME4SA4**	**F603_68.3 S4 MX4SA4**	518	**F603_68.3 P112 BE112M4**	**F603_68.3 P112 BX112M4**	519
21.2	1705	2.9	67.9	35000	**F703_67.9 S4 ME4SA4**	**F703_67.9 S4 MX4SA4**	522			

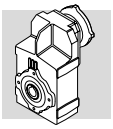

4 kW

n_2 min^{-1}	M_2 Nm	S	i	R_{n2} N	IE2	IE3		IEC IE2	IEC IE3	
21.9	1653	1.1	65.8	12000	**F513_65.8 S4 ME4SA4**	**F513_65.8 S4 MX4SA4**	514	**F513_65.8 P112 BE112M4**	**F513_65.8 P112 BX112M4**	515
22.8	1583	1.8	63.0	20000	**F603_63.0 S4 ME4SA4**	**F603_63.0 S4 MX4SA4**	518	**F603_63.0 P112 BE112M4**	**F603_63.0 P112 BX112M4**	519
23.0	1569	3.2	62.5	35000	**F703_62.5 S4 ME4SA4**	**F703_62.5 S4 MX4SA4**	522			
25.0	1449	3.5	57.7	35000	**F703_57.7 S4 ME4SA4**	**F703_57.7 S4 MX4SA4**	522			
27.8	1301	2.2	51.8	20000	**F603_51.8 S4 ME4SA4**	**F603_51.8 S4 MX4SA4**	518	**F603_51.8 P112 BE112M4**	**F603_51.8 P112 BX112M4**	519
29.4	1228	1.5	48.9	11600	**F513_48.9 S4 ME4SA4**	**F513_48.9 S4 MX4SA4**	514	**F513_48.9 P112 BE112M4**	**F513_48.9 P112 BX112M4**	515
30	1201	2.4	47.8	20000	**F603_47.8 S4 ME4SA4**	**F603_47.8 S4 MX4SA4**	518	**F603_47.8 P112 BE112M4**	**F603_47.8 P112 BX112M4**	519
34	1057	2.7	42.1	20000	**F603_42.1 S4 ME4SA4**	**F603_42.1 S4 MX4SA4**	518	**F603_42.1 P112 BE112M4**	**F603_42.1 P112 BX112M4**	519
37	975	3.0	38.8	20000	**F603_38.8 S4 ME4SA4**	**F603_38.8 S4 MX4SA4**	518	**F603_38.8 P112 BE112M4**	**F603_38.8 P112 BX112M4**	519
38	979	1.1	38.2	7720	**F412_38.2 S4 ME4SA4**	**F412_38.2 S4 MX4SA4**	510	**F412_38.2 P112 BE112M4**	**F412_38.2 P112 BX112M4**	511
39	953	1.8	37.1	11200	**F512_37.1 S4 ME4SA4**	**F512_37.1 S4 MX4SA4**	514	**F512_37.1 P112 BE112M4**	**F512_37.1 P112 BX112M4**	515
45	806	3.6	32.1	20000	**F603_32.1 S4 ME4SA4**	**F603_32.1 S4 MX4SA4**	518			
48	773	1.4	30.1	7610	**F412_30.1 S4 ME4SA4**	**F412_30.1 S4 MX4SA4**	510	**F412_30.1 P112 BE112M4**	**F412_30.1 P112 BX112M4**	511
48	770	2.2	30.0	10700	**F512_30.0 S4 ME4SA4**	**F512_30.0 S4 MX4SA4**	514	**F512_30.0 P112 BE112M4**	**F512_30.0 P112 BX112M4**	515
57	638	3.0	25.4	20000	**F603_25.4 S4 ME4SA4**	**F603_25.4 S4 MX4SA4**	518	**F603_25.4 P112 BE112M4**	**F603_25.4 P112 BX112M4**	519
60	619	1.8	24.1	7420	**F412_24.1 S4 ME4SA4**	**F412_24.1 S4 MX4SA4**	510	**F412_24.1 P112 BE112M4**	**F412_24.1 P112 BX112M4**	511
61	610	2.7	23.8	10200	**F512_23.8 S4 ME4SA4**	**F512_23.8 S4 MX4SA4**	514	**F512_23.8 P112 BE112M4**	**F512_23.8 P112 BX112M4**	515
61	589	3.2	23.5	20000	**F603_23.5 S4 ME4SA4**	**F603_23.5 S4 MX4SA4**	518	**F603_23.5 P112 BE112M4**	**F603_23.5 P112 BX112M4**	519
62	600	1.0	23.4	5040	**F312_23.4 S4 ME4SA4**	**F312_23.4 S4 MX4SA4**	506	**F312_23.4 P112 BE112M4**	**F312_23.4 P112 BX112M4**	507
68	542	1.1	21.1	5020	**F312_21.1 S4 ME4SA4**	**F312_21.1 S4 MX4SA4**	506	**F312_21.1 P112 BE112M4**	**F312_21.1 P112 BX112M4**	507
76	485	2.2	18.9	7150	**F412_18.9 S4 ME4SA4**	**F412_18.9 S4 MX4SA4**	510	**F412_18.9 P112 BE112M4**	**F412_18.9 P112 BX112M4**	511
77	483	3.2	18.8	9640	**F512_18.8 S4 ME4SA4**	**F512_18.8 S4 MX4SA4**	514	**F512_18.8 P112 BE112M4**	**F512_18.8 P112 BX112M4**	515
78	474	1.3	18.5	4980	**F312_18.5 S4 ME4SA4**	**F312_18.5 S4 MX4SA4**	506	**F312_18.5 P112 BE112M4**	**F312_18.5 P112 BX112M4**	507
84	439	2.4	17.1	7030	**F412_17.1 S4 ME4SA4**	**F412_17.1 S4 MX4SA4**	510	**F412_17.1 P112 BE112M4**	**F412_17.1 P112 BX112M4**	511
86	431	1.4	16.8	4930	**F312_16.8 S4 ME4SA4**	**F312_16.8 S4 MX4SA4**	506	**F312_16.8 P112 BE112M4**	**F312_16.8 P112 BX112M4**	507
98	375	2.7	14.6	6820	**F412_14.6 S4 ME4SA4**	**F412_14.6 S4 MX4SA4**	510	**F412_14.6 P112 BE112M4**	**F412_14.6 P112 BX112M4**	511
103	358	1.7	13.9	4820	**F312_13.9 S4 ME4SA4**	**F312_13.9 S4 MX4SA4**	506	**F312_13.9 P112 BE112M4**	**F312_13.9 P112 BX112M4**	507
113	326	1.8	12.7	4750	**F312_12.7 S4 ME4SA4**	**F312_12.7 S4 MX4SA4**	506	**F312_12.7 P112 BE112M4**	**F312_12.7 P112 BX112M4**	507
134	276	3.3	10.8	6380	**F412_10.8 S4 ME4SA4**	**F412_10.8 S4 MX4SA4**	510	**F412_10.8 P112 BE112M4**	**F412_10.8 P112 BX112M4**	511
134	276	2.2	10.7	4620	**F312_10.7 S4 ME4SA4**	**F312_10.7 S4 MX4SA4**	506	**F312_10.7 P112 BE112M4**	**F312_10.7 P112 BX112M4**	507
158	234	3.0	9.1	6160	**F412_9.1 S4 ME4SA4**	**F412_9.1 S4 MX4SA4**	510	**F412_9.1 P112 BE112M4**	**F412_9.1 P112 BX112M4**	511
160	231	1.7	9.0	4420	**F312_9.0 S4 ME4SA4**	**F312_9.0 S4 MX4SA4**	506	**F312_9.0 P112 BE112M4**	**F312_9.0 P112 BX112M4**	507
175	211	1.8	8.2	4350	**F312_8.2 S4 ME4SA4**	**F312_8.2 S4 MX4SA4**	506	**F312_8.2 P112 BE112M4**	**F312_8.2 P112 BX112M4**	507
207	178	2.2	6.9	4200	**F312_6.9 S4 ME4SA4**	**F312_6.9 S4 MX4SA4**	506	**F312_6.9 P112 BE112M4**	**F312_6.9 P112 BX112M4**	507
228	159	3.5	12.7	4120	**F312_12.7 S4 ME4SA2**		506	**F312_12.7 P112 BE112M2**		507
322	113	3.4	9.0	3760	**F312_9.0 S4 ME4SA2**		506	**F312_9.0 P112 BE112M2**		507

4 kW

n_2 min^{-1}	M_2 Nm	S	i	R_{n2} N	IE3		IEC IE3	
2.3	15202	0.9	625.6	55000			**F904_625.6 P112 BXN112M4**	529
2.5	14033	1.0	577.5	55000			**F904_577.5 P112 BXN112M4**	529
2.9	12042	1.2	495.6	55000			**F904_495.6 P112 BXN112M4**	529
3.1	11116	1.3	457.5	55000			**F904_457.5 P112 BXN112M4**	529
3.7	9526	1.5	392.0	55000			**F904_392.0 P112 BXN112M4**	529
4.0	8793	1.6	361.8	55000			**F904_361.8 P112 BXN112M4**	529
4.1	8594	0.9	353.7	45000			**F804_353.7 P112 BXN112M4**	526
4.9	7210	1.1	296.7	45000			**F804_296.7 P112 BXN112M4**	526
4.9	7074	2.0	291.1	55000			**F904_291.1 P112 BXN112M4**	529
5.3	6656	1.2	273.9	45000			**F804_273.9 P112 BXN112M4**	526
5.4	6530	2.1	268.7	55000			**F904_268.7 P112 BXN112M4**	529
6.1	5700	0.9	234.6	35000			**F704_234.6 P112 BXN112M4**	523
6.2	5623	2.5	231.4	55000			**F904_231.4 P112 BXN112M4**	529
6.6	5309	1.5	218.5	45000			**F804_218.5 P112 BXN112M4**	526
6.7	5262	1.0	216.5	35000			**F704_216.5 P112 BXN112M4**	523

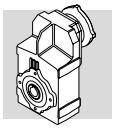

4 kW

n_2 min^{-1}	M_2 Nm	S	i	R_{n2} N	IE3		IEC IE3	
6.7	5190	2.7	213.6	55000			**F904_213.6 P112 BXN112M4**	529
7.2	5022	1.6	200.0	45000			**F803_200.0 P112 BXN112M4**	526
7.3	4922	1.0	196.0	35000			**F703_196.0 P112 BXN112M4**	523
7.4	4875	2.9	194.2	55000			**F903_194.2 P112 BXN112M4**	529
7.8	4636	1.7	184.6	45000			**F803_184.6 P112 BXN112M4**	526
8.0	4544	1.1	180.9	35000			**F703_180.9 P112 BXN112M4**	523
8.0	4500	3.1	179.2	55000			**F903_179.2 P112 BXN112M4**	529
8.6	4185	1.2	166.7	35000			**F703_166.7 P112 BXN112M4**	523
8.8	4089	3.4	162.8	55000			**F903_162.8 P112 BXN112M4**	529
9.0	4023	2.0	160.2	45000			**F803_160.2 P112 BXN112M4**	526
9.4	3863	1.3	153.8	35000			**F703_153.8 P112 BXN112M4**	523
9.7	3714	2.2	147.9	45000			**F803_147.9 P112 BXN112M4**	526
10.8	3338	1.5	133.0	35000			**F703_133.0 P112 BXN112M4**	523
10.9	3332	2.4	132.7	45000			**F803_132.7 P112 BXN112M4**	526
11.0	3277	0.9	130.5	20000			**F603_130.5 P112 BXN112M4**	519
11.7	3082	1.6	122.7	35000			**F703_122.7 P112 BXN112M4**	523
11.8	3076	2.6	122.5	45000			**F803_122.5 P112 BXN112M4**	526
12.0	3025	1.0	120.5	20000			**F603_120.5 P112 BXN112M4**	519
12.7	2856	2.8	113.8	45000			**F803_113.8 P112 BXN112M4**	526
13.1	2752	1.8	109.6	35000			**F703_109.6 P112 BXN112M4**	523
13.5	2671	1.1	106.4	20000			**F603_106.4 P112 BXN112M4**	519
13.7	2637	3.0	105.0	45000			**F803_105.0 P112 BXN112M4**	526
14.2	2541	2.0	101.2	35000			**F703_101.2 P112 BXN112M4**	523
14.7	2466	1.2	98.2	20000			**F603_98.2 P112 BXN112M4**	519
15.6	2323	2.2	92.5	35000			**F703_92.5 P112 BXN112M4**	523
16.9	2144	2.3	85.4	35000			**F703_85.4 P112 BXN112M4**	523
17.1	2110	1.4	84.0	20000			**F603_84.0 P112 BXN112M4**	519
18.6	1947	1.5	77.6	20000			**F603_77.6 P112 BXN112M4**	519
21.1	1715	1.7	68.3	20000			**F603_68.3 P112 BXN112M4**	519
21.9	1653	1.1	65.8	12000			**F513_65.8 P112 BXN112M4**	515
22.8	1583	1.8	63.0	20000			**F603_63.0 P112 BXN112M4**	519
27.8	1301	2.2	51.8	20000			**F603_51.8 P112 BXN112M4**	519
29.4	1228	1.5	48.9	11600			**F513_48.9 P112 BXN112M4**	515
30	1201	2.4	47.8	20000			**F603_47.8 P112 BXN112M4**	519
34	1057	2.7	42.1	20000			**F603_42.1 P112 BXN112M4**	519
37	975	3.0	38.8	20000			**F603_38.8 P112 BXN112M4**	519
38	979	1.1	38.2	7720			**F412_38.2 P112 BXN112M4**	511
39	953	1.8	37.1	11200			**F512_37.1 P112 BXN112M4**	515
48	773	1.4	30.1	7610			**F412_30.1 P112 BXN112M4**	511
48	770	2.2	30.0	10700			**F512_30.0 P112 BXN112M4**	515
57	638	3.0	25.4	20000			**F603_25.4 P112 BXN112M4**	519
60	619	1.8	24.1	7420			**F412_24.1 P112 BXN112M4**	511
61	610	2.7	23.8	10200			**F512_23.8 P112 BXN112M4**	515
61	589	3.2	23.5	20000			**F603_23.5 P112 BXN112M4**	519
62	600	1.0	23.4	5040			**F312_23.4 P112 BXN112M4**	507
68	542	1.1	21.1	5020			**F312_21.1 P112 BXN112M4**	507
76	485	2.2	18.9	7150			**F412_18.9 P112 BXN112M4**	511
77	483	3.2	18.8	9640			**F512_18.8 P112 BXN112M4**	515
78	474	1.3	18.5	4980			**F312_18.5 P112 BXN112M4**	507
84	439	2.4	17.1	7030			**F412_17.1 P112 BXN112M4**	511
86	431	1.4	16.8	4930			**F312_16.8 P112 BXN112M4**	507
98	375	2.7	14.6	6820			**F412_14.6 P112 BXN112M4**	511
103	358	1.7	13.9	4820			**F312_13.9 P112 BXN112M4**	507
113	326	1.8	12.7	4750			**F312_12.7 P112 BXN112M4**	507
134	276	3.3	10.8	6380			**F412_10.8 P112 BXN112M4**	511
134	276	2.2	10.7	4620			**F312_10.7 P112 BXN112M4**	507
158	234	3.0	9.1	6160			**F412_9.1 P112 BXN112M4**	511
160	231	1.7	9.0	4420			**F312_9.0 P112 BXN112M4**	507
175	211	1.8	8.2	4350			**F312_8.2 P112 BXN112M4**	507
207	178	2.2	6.9	4200			**F312_6.9 P112 BXN112M4**	507

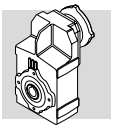

5.5 kW

n_2 min-1	M_2 Nm	S	i	R_{n2} N	IE2	IE3		IE2	IE3	
2.9	16057	0.9	495.6	55000	**F904_495.6 S4 ME4SB4**	**F904_495.6 S4 MX4SB4**	528	**F904_495.6 P132 BE132S4**	**F904_495.6 P132 BX132SB4**	529
3.2	14821	0.9	457.5	55000	**F904_457.5 S4 ME4SB4**	**F904_457.5 S4 MX4SB4**	528	**F904_457.5 P132 BE132S4**	**F904_457.5 P132 BX132SB4**	529
3.7	12701	1.1	392.0	55000	**F904_392.0 S4 ME4SB4**	**F904_392.0 S4 MX4SB4**	528	**F904_392.0 P132 BE132S4**	**F904_392.0 P132 BX132SB4**	529
4.0	11724	1.2	361.8	55000	**F904_361.8 S4 ME4SB4**	**F904_361.8 S4 MX4SB4**	528	**F904_361.8 P132 BE132S4**	**F904_361.8 P132 BX132SB4**	529
5.0	9432	1.5	291.1	55000	**F904_291.1 S4 ME4SB4**	**F904_291.1 S4 MX4SB4**	528	**F904_291.1 P132 BE132S4**	**F904_291.1 P132 BX132SB4**	529
5.3	8874	0.9	273.9	45000	**F804_273.9 S4 ME4SB4**	**F804_273.9 S4 MX4SB4**	525	**F804_273.9 P132 BE132S4**	**F804_273.9 P132 BX132SB4**	526
5.4	8707	1.6	268.7	55000	**F904_268.7 S4 ME4SB4**	**F904_268.7 S4 MX4SB4**	528	**F904_268.7 P132 BE132S4**	**F904_268.7 P132 BX132SB4**	529
6.3	7497	1.9	231.4	55000	**F904_231.4 S4 ME4SB4**	**F904_231.4 S4 MX4SB4**	528	**F904_231.4 P132 BE132S4**	**F904_231.4 P132 BX132SB4**	529
6.7	7079	1.1	218.5	45000	**F804_218.5 S4 ME4SB4**	**F804_218.5 S4 MX4SB4**	525	**F804_218.5 P132 BE132S4**	**F804_218.5 P132 BX132SB4**	526
6.8	6920	2.0	213.6	55000	**F904_213.6 S4 ME4SB4**	**F904_213.6 S4 MX4SB4**	528	**F904_213.6 P132 BE132S4**	**F904_213.6 P132 BX132SB4**	529
7.3	6696	1.2	200.0	45000	**F803_200.0 S4 ME4SB4**	**F803_200.0 S4 MX4SB4**	525	**F803_200.0 P132 BE132S4**	**F803_200.0 P132 BX132SB4**	526
7.5	6500	2.2	194.2	55000	**F903_194.2 S4 ME4SB4**	**F903_194.2 S4 MX4SB4**	528	**F903_194.2 P132 BE132S4**	**F903_194.2 P132 BX132SB4**	529
7.9	6181	1.3	184.6	45000	**F803_184.6 S4 ME4SB4**	**F803_184.6 S4 MX4SB4**	525	**F803_184.6 P132 BE132S4**	**F803_184.6 P132 BX132SB4**	526
8.1	6000	2.3	179.2	55000	**F903_179.2 S4 ME4SB4**	**F903_179.2 S4 MX4SB4**	528	**F903_179.2 P132 BE132S4**	**F903_179.2 P132 BX132SB4**	529
8.8	5580	0.9	166.7	35000	**F703_166.7 S4 ME4SB4**	**F703_166.7 S4 MX4SB4**	522	**F703_166.7 P132 BE132S4**	**F703_166.7 P132 BX132SB4**	523
9.0	5452	2.6	162.8	55000	**F903_162.8 S4 ME4SB4**	**F903_162.8 S4 MX4SB4**	528	**F903_162.8 P132 BE132S4**	**F903_162.8 P132 BX132SB4**	529
9.1	5364	1.5	160.2	45000	**F803_160.2 S4 ME4SB4**	**F803_160.2 S4 MX4SB4**	525	**F803_160.2 P132 BE132S4**	**F803_160.2 P132 BX132SB4**	526
9.5	5151	1.0	153.8	35000	**F703_153.8 S4 ME4SB4**	**F703_153.8 S4 MX4SB4**	522	**F703_153.8 P132 BE132S4**	**F703_153.8 P132 BX132SB4**	523
9.7	5032	2.8	150.3	55000	**F903_150.3 S4 ME4SB4**	**F903_150.3 S4 MX4SB4**	528	**F903_150.3 P132 BE132S4**	**F903_150.3 P132 BX132SB4**	529
9.9	4952	1.6	147.9	45000	**F803_147.9 S4 ME4SB4**	**F803_147.9 S4 MX4SB4**	525	**F803_147.9 P132 BE132S4**	**F803_147.9 P132 BX132SB4**	526
10.6	4598	3.0	137.3	55000	**F903_137.3 S4 ME4SB4**	**F903_137.3 S4 MX4SB4**	528	**F903_137.3 P132 BE132S4**	**F903_137.3 P132 BX132SB4**	529
11.0	4451	1.1	133.0	35000	**F703_133.0 S4 ME4SB4**	**F703_133.0 S4 MX4SB4**	522	**F703_133.0 P132 BE132S4**	**F703_133.0 P132 BX132SB4**	523
11.0	4443	1.8	132.7	45000	**F803_132.7 S4 ME4SB4**	**F803_132.7 S4 MX4SB4**	525	**F803_132.7 P132 BE132S4**	**F803_132.7 P132 BX132SB4**	526
11.5	4244	3.3	126.8	55000	**F903_126.8 S4 ME4SB4**	**F903_126.8 S4 MX4SB4**	528	**F903_126.8 P132 BE132S4**	**F903_126.8 P132 BX132SB4**	529
11.9	4109	1.2	122.7	35000	**F703_122.7 S4 ME4SB4**	**F703_122.7 S4 MX4SB4**	522	**F703_122.7 P132 BE132S4**	**F703_122.7 P132 BX132SB4**	523
11.9	4101	2.0	122.5	45000	**F803_122.5 S4 ME4SB4**	**F803_122.5 S4 MX4SB4**	525	**F803_122.5 P132 BE132S4**	**F803_122.5 P132 BX132SB4**	526
12.8	3808	2.1	113.8	45000	**F803_113.8 S4 ME4SB4**	**F803_113.8 S4 MX4SB4**	525	**F803_113.8 P132 BE132S4**	**F803_113.8 P132 BX132SB4**	526
13.3	3670	1.4	109.6	35000	**F703_109.6 S4 ME4SB4**	**F703_109.6 S4 MX4SB4**	522	**F703_109.6 P132 BE132S4**	**F703_109.6 P132 BX132SB4**	523
13.9	3515	2.3	105.0	45000	**F803_105.0 S4 ME4SB4**	**F803_105.0 S4 MX4SB4**	525	**F803_105.0 P132 BE132S4**	**F803_105.0 P132 BX132SB4**	526
14.4	3388	1.5	101.2	35000	**F703_101.2 S4 ME4SB4**	**F703_101.2 S4 MX4SB4**	522	**F703_101.2 P132 BE132S4**	**F703_101.2 P132 BX132SB4**	523
15.8	3097	1.6	92.5	35000	**F703_92.5 S4 ME4SB4**	**F703_92.5 S4 MX4SB4**	522	**F703_92.5 P132 BE132S4**	**F703_92.5 P132 BX132SB4**	523
15.8	3090	2.6	92.3	45000	**F803_92.3 S4 ME4SB4**	**F803_92.3 S4 MX4SB4**	525	**F803_92.3 P132 BE132S4**	**F803_92.3 P132 BX132SB4**	526
17.1	2859	1.7	85.4	35000	**F703_85.4 S4 ME4SB4**	**F703_85.4 S4 MX4SB4**	522	**F703_85.4 P132 BE132S4**	**F703_85.4 P132 BX132SB4**	523
17.1	2853	2.8	85.2	45000	**F803_85.2 S4 ME4SB4**	**F803_85.2 S4 MX4SB4**	525	**F803_85.2 P132 BE132S4**	**F803_85.2 P132 BX132SB4**	526
17.4	2813	1.0	84.0	20000	**F603_84.0 S4 ME4SB4**	**F603_84.0 S4 MX4SB4**	518	**F603_84.0 P132 BE132S4**	**F603_84.0 P132 BX132SB4**	519
18.8	2597	1.1	77.6	20000	**F603_77.6 S4 ME4SB4**	**F603_77.6 S4 MX4SB4**	518	**F603_77.6 P132 BE132S4**	**F603_77.6 P132 BX132SB4**	519
19.1	2553	3.1	76.3	45000	**F803_76.3 S4 ME4SB4**	**F803_76.3 S4 MX4SB4**	525	**F803_76.3 P132 BE132S4**	**F803_76.3 P132 BX132SB4**	526
19.8	2463	2.0	73.6	35000	**F703_73.6 S4 ME4SB4**	**F703_73.6 S4 MX4SB4**	522	**F703_73.6 P132 BE132S4**	**F703_73.6 P132 BX132SB4**	523
20.7	2356	3.4	70.4	45000	**F803_70.4 S4 ME4SB4**	**F803_70.4 S4 MX4SB4**	525	**F803_70.4 P132 BE132S4**	**F803_70.4 P132 BX132SB4**	526
21.4	2286	1.3	68.3	20000	**F603_68.3 S4 ME4SB4**	**F603_68.3 S4 MX4SB4**	518	**F603_68.3 P132 BE132S4**	**F603_68.3 P132 BX132SB4**	519
21.5	2273	2.2	67.9	35000	**F703_67.9 S4 ME4SB4**	**F703_67.9 S4 MX4SB4**	522	**F703_67.9 P132 BE132S4**	**F703_67.9 P132 BX132SB4**	523
23.2	2110	1.4	63.0	20000	**F603_63.0 S4 ME4SB4**	**F603_63.0 S4 MX4SB4**	518	**F603_63.0 P132 BE132S4**	**F603_63.0 P132 BX132SB4**	519
23.4	2093	2.4	62.5	35000	**F703_62.5 S4 ME4SB4**	**F703_62.5 S4 MX4SB4**	522	**F703_62.5 P132 BE132S4**	**F703_62.5 P132 BX132SB4**	523
25.3	1932	2.6	57.7	35000	**F703_57.7 S4 ME4SB4**	**F703_57.7 S4 MX4SB4**	522	**F703_57.7 P132 BE132S4**	**F703_57.7 P132 BX132SB4**	523
28.2	1735	1.7	51.8	20000	**F603_51.8 S4 ME4SB4**	**F603_51.8 S4 MX4SB4**	518	**F603_51.8 P132 BE132S4**	**F603_51.8 P132 BX132SB4**	519
30	1639	3.1	49.0	35000	**F703_49.0 S4 ME4SB4**	**F703_49.0 S4 MX4SB4**	522	**F703_49.0 P132 BE132S4**	**F703_49.0 P132 BX132SB4**	523
30	1637	1.1	48.9	10300	**F513_48.9 S4 ME4SB4**	**F513_48.9 S4 MX4SB4**	514	**F513_48.9 P132 BE132S4**	**F513_48.9 P132 BX132SB4**	515
31	1602	1.8	47.8	20000	**F603_47.8 S4 ME4SB4**	**F603_47.8 S4 MX4SB4**	518	**F603_47.8 P132 BE132S4**	**F603_47.8 P132 BX132SB4**	519
32	1513	3.3	45.2	34300	**F703_45.2 S4 ME4SB4**	**F703_45.2 S4 MX4SB4**	522	**F703_45.2 P132 BE132S4**	**F703_45.2 P132 BX132SB4**	523
35	1409	2.1	42.1	20000	**F603_42.1 S4 ME4SB4**	**F603_42.1 S4 MX4SB4**	518	**F603_42.1 P132 BE132S4**	**F603_42.1 P132 BX132SB4**	519
38	1301	2.2	38.8	20000	**F603_38.8 S4 ME4SB4**	**F603_38.8 S4 MX4SB4**	518	**F603_38.8 P132 BE132S4**	**F603_38.8 P132 BX132SB4**	519
39	1270	1.3	37.1	10300	**F512_37.1 S4 ME4SB4**	**F512_37.1 S4 MX4SB4**	514	**F512_37.1 P132 BE132S4**	**F512_37.1 P132 BX132SB4**	515
46	1074	2.7	32.1	20000	**F603_32.1 S4 ME4SB4**	**F603_32.1 S4 MX4SB4**	518	**F603_32.1 P132 BE132S4**	**F603_32.1 P132 BX132SB4**	519
48	1030	1.1	30.1	6580	**F412_30.1 S4 ME4SB4**	**F412_30.1 S4 MX4SB4**	510	**F412_30.1 P132 BE132S4**	**F412_30.1 P132 BX132SB4**	511
49	1027	1.7	30.0	9950	**F512_30.0 S4 ME4SB4**	**F512_30.0 S4 MX4SB4**	514	**F512_30.0 P132 BE132S4**	**F512_30.0 P132 BX132SB4**	515
49	992	2.9	29.6	20000	**F603_29.6 S4 ME4SB4**	**F603_29.6 S4 MX4SB4**	518	**F603_29.6 P132 BE132S4**	**F603_29.6 P132 BX132SB4**	519
57	851	2.2	25.4	20000	**F603_25.4 S4 ME4SB4**	**F603_25.4 S4 MX4SB4**	518	**F603_25.4 P132 BE132S4**	**F603_25.4 P132 BX132SB4**	519

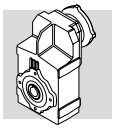

5.5 kW

n_2 min^{-1}	M_2 Nm	S	i	R_{n2} N	IE2	IE3		IEC IE2	IEC IE3	
61	825	1.3	24.1	6580	**F412_24.1 S4 ME4SB4**	**F412_24.1 S4 MX4SB4**	510	**F412_24.1 P132 BE132S4**	**F412_24.1 P132 BX132SB4**	511
61	814	2.0	23.8	9560	**F512_23.8 S4 ME4SB4**	**F512_23.8 S4 MX4SB4**	514	**F512_23.8 P132 BE132S4**	**F512_23.8 P132 BX132SB4**	515
62	786	2.4	23.5	20000	**F603_23.5 S4 ME4SB4**	**F603_23.5 S4 MX4SB4**	518	**F603_23.5 P132 BE132S4**	**F603_23.5 P132 BX132SB4**	519
71	692	2.7	20.7	20000	**F603_20.7 S4 ME4SB4**	**F603_20.7 S4 MX4SB4**	518	**F603_20.7 P132 BE132S4**	**F603_20.7 P132 BX132SB4**	519
77	638	3.0	19.1	20000	**F603_19.1 S4 ME4SB4**	**F603_19.1 S4 MX4SB4**	518	**F603_19.1 P132 BE132S4**	**F603_19.1 P132 BX132SB4**	519
77	646	1.7	18.9	6480	**F412_18.9 S4 ME4SB4**	**F412_18.9 S4 MX4SB4**	510	**F412_18.9 P132 BE132S4**	**F412_18.9 P132 BX132SB4**	511
78	644	2.4	18.8	9110	**F512_18.8 S4 ME4SB4**	**F512_18.8 S4 MX4SB4**	514	**F512_18.8 P132 BE132S4**	**F512_18.8 P132 BX132SB4**	515
79	632	0.9	18.5	4480	**F312_18.5 S4 ME4SB4**	**F312_18.5 S4 MX4SB4**	506	**F312_18.5 P132 BE132S4**	**F312_18.5 P132 BX132SB4**	507
85	585	1.8	17.1	6410	**F412_17.1 S4 ME4SB4**	**F412_17.1 S4 MX4SB4**	510	**F412_17.1 P132 BE132S4**	**F412_17.1 P132 BX132SB4**	511
87	575	1.0	16.8	4300	**F312_16.8 S4 ME4SB4**	**F312_16.8 S4 MX4SB4**	506	**F312_16.8 P132 BE132S4**	**F312_16.8 P132 BX132SB4**	507
100	500	2.0	14.6	6280	**F412_14.6 S4 ME4SB4**	**F412_14.6 S4 MX4SB4**	510	**F412_14.6 P132 BE132S4**	**F412_14.6 P132 BX132SB4**	511
104	478	3.0	14.0	8520	**F512_14.0 S4 ME4SB4**	**F512_14.0 S4 MX4SB4**	514	**F512_14.0 P132 BE132S4**	**F512_14.0 P132 BX132SB4**	515
105	477	1.3	13.9	4180	**F312_13.9 S4 ME4SB4**	**F312_13.9 S4 MX4SB4**	506	**F312_13.9 P132 BE132S4**	**F312_13.9 P132 BX132SB4**	507
115	435	1.4	12.7	3980	**F312_12.7 S4 ME4SB4**	**F312_12.7 S4 MX4SB4**	506	**F312_12.7 P132 BE132S4**	**F312_12.7 P132 BX132SB4**	507
131	380	3.5	11.1	8050	**F512_11.1 S4 ME4SB4**	**F512_11.1 S4 MX4SB4**	514	**F512_11.1 P132 BE132S4**	**F512_11.1 P132 BX132SB4**	515
136	368	2.4	10.8	5970	**F412_10.8 S4 ME4SB4**	**F412_10.8 S4 MX4SB4**	510	**F412_10.8 P132 BE132S4**	**F412_10.8 P132 BX132SB4**	511
136	368	1.6	10.7	3880	**F312_10.7 S4 ME4SB4**	**F312_10.7 S4 MX4SB4**	506	**F312_10.7 P132 BE132S4**	**F312_10.7 P132 BX132SB4**	507
160	312	2.2	9.1	5810	**F412_9.1 S4 ME4SB4**	**F412_9.1 S4 MX4SB4**	510	**F412_9.1 P132 BE132S4**	**F412_9.1 P132 BX132SB4**	511
161	310	3.6	9.1	7590	**F512_9.1 S4 ME4SB4**	**F512_9.1 S4 MX4SB4**	514	**F512_9.1 P132 BE132S4**	**F512_9.1 P132 BX132SB4**	515
162	308	1.3	9.0	3850	**F312_9.0 S4 ME4SB4**	**F312_9.0 S4 MX4SB4**	506	**F312_9.0 P132 BE132S4**	**F312_9.0 P132 BX132SB4**	507
177	281	1.4	8.2	3750	**F312_8.2 S4 ME4SB4**	**F312_8.2 S4 MX4SB4**	506	**F312_8.2 P132 BE132S4**	**F312_8.2 P132 BX132SB4**	507
200	250	3.3	14.6	5510	**F412_14.6 S4 ME4SB2**		510	**F412_14.6 P132 BE132SA2**		511
210	238	1.6	6.9	3610	**F312_6.9 S4 ME4SB4**	**F312_6.9 S4 MX4SB4**	506	**F312_6.9 P132 BE132S4**	**F312_6.9 P132 BX132SB4**	507
217	230	2.8	6.7	5430	**F412_6.7 S4 ME4SB4**	**F412_6.7 S4 MX4SB4**	510	**F412_6.7 P132 BE132S4**	**F412_6.7 P132 BX132SB4**	511
272	184	4.0	10.8	5120	**F412_10.8 S4 ME4SB2**		510	**F412_10.8 P132 BE132SA2**		511
320	156	3.9	9.1	4930	**F412_9.1 S4 ME4SB2**		510	**F412_9.1 P132 BE132SA2**		511

5.5 kW

n_2 min^{-1}	M_2 Nm	S	i	R_{n2} N	IE3		IEC IE3	
2.9	16057	0.9	495.6	55000			**F904_495.6 P132 BXN132S4**	529
3.2	14821	0.9	457.5	55000			**F904_457.5 P132 BXN132S4**	529
3.7	12701	1.1	392.0	55000			**F904_392.0 P132 BXN132S4**	529
4.0	11724	1.2	361.8	55000			**F904_361.8 P132 BXN132S4**	529
5.0	9432	1.5	291.1	55000			**F904_291.1 P132 BXN132S4**	529
5.3	8874	0.9	273.9	45000			**F804_273.9 P132 BXN132S4**	526
5.4	8707	1.6	268.7	55000			**F904_268.7 P132 BXN132S4**	529
6.3	7497	1.9	231.4	55000			**F904_231.4 P132 BXN132S4**	529
6.7	7079	1.1	218.5	45000			**F804_218.5 P132 BXN132S4**	526
6.8	6920	2.0	213.6	55000			**F904_213.6 P132 BXN132S4**	529
7.3	6696	1.2	200.0	45000			**F803_200.0 P132 BXN132S4**	526
7.5	6500	2.2	194.2	55000			**F903_194.2 P132 BXN132S4**	529
7.9	6181	1.3	184.6	45000			**F803_184.6 P132 BXN132S4**	526
8.1	6000	2.3	179.2	55000			**F903_179.2 P132 BXN132S4**	529
8.8	5580	0.9	166.7	35000			**F703_166.7 P132 BXN132S4**	523
9.0	5452	2.6	162.8	55000			**F903_162.8 P132 BXN132S4**	529
9.1	5364	1.5	160.2	45000			**F803_160.2 P132 BXN132S4**	526
9.5	5151	1.0	153.8	35000			**F703_153.8 P132 BXN132S4**	523
9.7	5032	2.8	150.3	55000			**F903_150.3 P132 BXN132S4**	529
9.9	4952	1.6	147.9	45000			**F803_147.9 P132 BXN132S4**	526
10.6	4598	3.0	137.3	55000			**F903_137.3 P132 BXN132S4**	529
11.0	4451	1.1	133.0	35000			**F703_133.0 P132 BXN132S4**	523

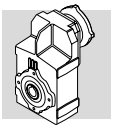

5.5 kW

n_2 min-1	M_2 Nm	S	i	R_{n2} N	 IE3		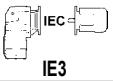 IE3	
11.0	4443	1.8	132.7	45000			**F803_132.7 P132 BXN132S4**	526
11.5	4244	3.3	126.8	55000			**F903_126.8 P132 BXN132S4**	529
11.9	4109	1.2	122.7	35000			**F703_122.7 P132 BXN132S4**	523
11.9	4101	2.0	122.5	45000			**F803_122.5 P132 BXN132S4**	526
12.8	3808	2.1	113.8	45000			**F803_113.8 P132 BXN132S4**	526
13.3	3670	1.4	109.6	35000			**F703_109.6 P132 BXN132S4**	523
13.9	3515	2.3	105.0	45000			**F803_105.0 P132 BXN132S4**	526
14.4	3388	1.5	101.2	35000			**F703_101.2 P132 BXN132S4**	523
15.8	3097	1.6	92.5	35000			**F703_92.5 P132 BXN132S4**	523
15.8	3090	2.6	92.3	45000			**F803_92.3 P132 BXN132S4**	526
17.1	2859	1.7	85.4	35000			**F703_85.4 P132 BXN132S4**	523
17.1	2853	2.8	85.2	45000			**F803_85.2 P132 BXN132S4**	526
17.4	2813	1.0	84.0	20000			**F603_84.0 P132 BXN132S4**	519
18.8	2597	1.1	77.6	20000			**F603_77.6 P132 BXN132S4**	519
19.1	2553	3.1	76.3	45000			**F803_76.3 P132 BXN132S4**	526
19.8	2463	2.0	73.6	35000			**F703_73.6 P132 BXN132S4**	523
20.7	2356	3.4	70.4	45000			**F803_70.4 P132 BXN132S4**	526
21.4	2286	1.3	68.3	20000			**F603_68.3 P132 BXN132S4**	519
21.5	2273	2.2	67.9	35000			**F703_67.9 P132 BXN132S4**	523
23.2	2110	1.4	63.0	20000			**F603_63.0 P132 BXN132S4**	519
23.4	2093	2.4	62.5	35000			**F703_62.5 P132 BXN132S4**	523
25.3	1932	2.6	57.7	35000			**F703_57.7 P132 BXN132S4**	523
28.2	1735	1.7	51.8	20000			**F603_51.8 P132 BXN132S4**	519
30	1639	3.1	49.0	35000			**F703_49.0 P132 BXN132S4**	523
30	1637	1.1	48.9	10300			**F513_48.9 P132 BXN132S4**	515
31	1602	1.8	47.8	20000			**F603_47.8 P132 BXN132S4**	519
32	1513	3.3	45.2	34300			**F703_45.2 P132 BXN132S4**	523
35	1409	2.1	42.1	20000			**F603_42.1 P132 BXN132S4**	519
38	1301	2.2	38.8	20000			**F603_38.8 P132 BXN132S4**	519
39	1270	1.3	37.1	10300			**F512_37.1 P132 BXN132S4**	515
46	1074	2.7	32.1	20000			**F603_32.1 P132 BXN132S4**	519
48	1030	1.1	30.1	6580			**F412_30.1 P132 BXN132S4**	511
49	1027	1.7	30.0	9950			**F512_30.0 P132 BXN132S4**	515
49	992	2.9	29.6	20000			**F603_29.6 P132 BXN132S4**	519
57	851	2.2	25.4	20000			**F603_25.4 P132 BXN132S4**	519
61	825	1.3	24.1	6580			**F412_24.1 P132 BXN132S4**	511
61	814	2.0	23.8	9560			**F512_23.8 P132 BXN132S4**	515
62	786	2.4	23.5	20000			**F603_23.5 P132 BXN132S4**	519
71	692	2.7	20.7	20000			**F603_20.7 P132 BXN132S4**	519
77	638	3.0	19.1	20000			**F603_19.1 P132 BXN132S4**	519
77	646	1.7	18.9	6480			**F412_18.9 P132 BXN132S4**	511
78	644	2.4	18.8	9110			**F512_18.8 P132 BXN132S4**	515
79	632	0.9	18.5	4480			**F312_18.5 P132 BXN132S4**	507
85	585	1.8	17.1	6410			**F412_17.1 P132 BXN132S4**	511
87	575	1.0	16.8	4300			**F312_16.8 P132 BXN132S4**	507
100	500	2.0	14.6	6280			**F412_14.6 P132 BXN132S4**	511
104	478	3.0	14.0	8520			**F512_14.0 P132 BXN132S4**	515
105	477	1.3	13.9	4180			**F312_13.9 P132 BXN132S4**	507
115	435	1.4	12.7	3980			**F312_12.7 P132 BXN132S4**	507
131	380	3.5	11.1	8050			**F512_11.1 P132 BXN132S4**	515
136	368	2.4	10.8	5970			**F412_10.8 P132 BXN132S4**	511
136	368	1.6	10.7	3880			**F312_10.7 P132 BXN132S4**	507
160	312	2.2	9.1	5810			**F412_9.1 P132 BXN132S4**	511
161	310	3.6	9.1	7590			**F512_9.1 P132 BXN132S4**	515
162	308	1.3	9.0	3850			**F312_9.0 P132 BXN132S4**	507
177	281	1.4	8.2	3750			**F312_8.2 P132 BXN132S4**	507
210	238	1.6	6.9	3610			**F312_6.9 P132 BXN132S4**	507
217	230	2.8	6.7	5430			**F412_6.7 P132 BXN132S4**	511

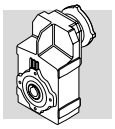

7.5 kW

n_2 min-1	M_2 Nm	S	i	R_{n2} N	IE2	IE3		IE2	IE3	
4.0	15957	0.9	361.8	55000	**F904_361.8 S4 ME4LA4**	**F904_361.8 S4 MX4LA4**	528	**F904_361.8 P132 BE132MA4**	**F904_361.8 P132 BX132MA4**	529
5.0	12838	1.1	291.1	55000	**F904_291.1 S4 ME4LA4**	**F904_291.1 S4 MX4LA4**	528	**F904_291.1 P132 BE132MA4**	**F904_291.1 P132 BX132MA4**	529
5.4	11851	1.2	268.7	55000	**F904_268.7 S4 ME4LA4**	**F904_268.7 S4 MX4LA4**	528	**F904_268.7 P132 BE132MA4**	**F904_268.7 P132 BX132MA4**	529
6.3	10204	1.4	231.4	55000	**F904_231.4 S4 ME4LA4**	**F904_231.4 S4 MX4LA4**	528	**F904_231.4 P132 BE132MA4**	**F904_231.4 P132 BX132MA4**	529
6.8	9419	1.5	213.6	55000	**F904_213.6 S4 ME4LA4**	**F904_213.6 S4 MX4LA4**	528	**F904_213.6 P132 BE132MA4**	**F904_213.6 P132 BX132MA4**	529
7.3	9114	0.9	200.0	45000	**F803_200.0 S4 ME4LA4**	**F803_200.0 S4 MX4LA4**	525	**F803_200.0 P132 BE132MA4**	**F803_200.0 P132 BX132MA4**	526
7.5	8848	1.6	194.2	55000	**F903_194.2 S4 ME4LA4**	**F903_194.2 S4 MX4LA4**	528	**F903_194.2 P132 BE132MA4**	**F903_194.2 P132 BX132MA4**	529
7.9	8413	1.0	184.6	45000	**F803_184.6 S4 ME4LA4**	**F803_184.6 S4 MX4LA4**	525	**F803_184.6 P132 BE132MA4**	**F803_184.6 P132 BX132MA4**	526
8.1	8167	1.7	179.2	55000	**F903_179.2 S4 ME4LA4**	**F903_179.2 S4 MX4LA4**	528	**F903_179.2 P132 BE132MA4**	**F903_179.2 P132 BX132MA4**	529
8.9	7420	1.9	162.8	55000	**F903_162.8 S4 ME4LA4**	**F903_162.8 S4 MX4LA4**	528	**F903_162.8 P132 BE132MA4**	**F903_162.8 P132 BX132MA4**	529
9.1	7302	1.1	160.2	45000	**F803_160.2 S4 ME4LA4**	**F803_160.2 S4 MX4LA4**	525	**F803_160.2 P132 BE132MA4**	**F803_160.2 P132 BX132MA4**	526
9.7	6849	2.0	150.3	55000	**F903_150.3 S4 ME4LA4**	**F903_150.3 S4 MX4LA4**	528	**F903_150.3 P132 BE132MA4**	**F903_150.3 P132 BX132MA4**	529
9.8	6740	1.2	147.9	45000	**F803_147.9 S4 ME4LA4**	**F803_147.9 S4 MX4LA4**	525	**F803_147.9 P132 BE132MA4**	**F803_147.9 P132 BX132MA4**	526
10.6	6259	2.2	137.3	55000	**F903_137.3 S4 ME4LA4**	**F903_137.3 S4 MX4LA4**	528	**F903_137.3 P132 BE132MA4**	**F903_137.3 P132 BX132MA4**	529
11.0	6047	1.3	132.7	45000	**F803_132.7 S4 ME4LA4**	**F803_132.7 S4 MX4LA4**	525	**F803_132.7 P132 BE132MA4**	**F803_132.7 P132 BX132MA4**	526
11.5	5777	2.4	126.8	55000	**F903_126.8 S4 ME4LA4**	**F903_126.8 S4 MX4LA4**	528	**F903_126.8 P132 BE132MA4**	**F903_126.8 P132 BX132MA4**	529
11.9	5593	0.9	122.7	35000	**F703_122.7 S4 ME4LA4**	**F703_122.7 S4 MX4LA4**	522	**F703_122.7 P132 BE132MA4**	**F703_122.7 P132 BX132MA4**	523
11.9	5582	1.4	122.5	45000	**F803_122.5 S4 ME4LA4**	**F803_122.5 S4 MX4LA4**	525	**F803_122.5 P132 BE132MA4**	**F803_122.5 P132 BX132MA4**	526
12.8	5184	1.5	113.8	45000	**F803_113.8 S4 ME4LA4**	**F803_113.8 S4 MX4LA4**	525	**F803_113.8 P132 BE132MA4**	**F803_113.8 P132 BX132MA4**	526
13.0	5101	2.7	111.9	55000	**F903_111.9 S4 ME4LA4**	**F903_111.9 S4 MX4LA4**	528	**F903_111.9 P132 BE132MA4**	**F903_111.9 P132 BX132MA4**	529
13.3	4995	1.0	109.6	35000	**F703_109.6 S4 ME4LA4**	**F703_109.6 S4 MX4LA4**	522	**F703_109.6 P132 BE132MA4**	**F703_109.6 P132 BX132MA4**	523
13.9	4785	1.7	105.0	45000	**F803_105.0 S4 ME4LA4**	**F803_105.0 S4 MX4LA4**	525	**F803_105.0 P132 BE132MA4**	**F803_105.0 P132 BX132MA4**	526
14.1	4709	3.0	103.3	55000	**F903_103.3 S4 ME4LA4**	**F903_103.3 S4 MX4LA4**	528	**F903_103.3 P132 BE132MA4**	**F903_103.3 P132 BX132MA4**	529
14.4	4611	1.1	101.2	35000	**F703_101.2 S4 ME4LA4**	**F703_101.2 S4 MX4LA4**	522	**F703_101.2 P132 BE132MA4**	**F703_101.2 P132 BX132MA4**	523
15.2	4364	3.2	95.8	55000	**F903_95.8 S4 ME4LA4**	**F903_95.8 S4 MX4LA4**	528	**F903_95.8 P132 BE132MA4**	**F903_95.8 P132 BX132MA4**	529
15.7	4215	1.2	92.5	35000	**F703_92.5 S4 ME4LA4**	**F703_92.5 S4 MX4LA4**	522	**F703_92.5 P132 BE132MA4**	**F703_92.5 P132 BX132MA4**	523
15.8	4206	1.9	92.3	45000	**F803_92.3 S4 ME4LA4**	**F803_92.3 S4 MX4LA4**	525	**F803_92.3 P132 BE132MA4**	**F803_92.3 P132 BX132MA4**	526
16.5	4028	3.5	88.4	55000	**F903_88.4 S4 ME4LA4**	**F903_88.4 S4 MX4LA4**	528	**F903_88.4 P132 BE132MA4**	**F903_88.4 P132 BX132MA4**	529
17.0	3891	1.3	85.4	35000	**F703_85.4 S4 ME4LA4**	**F703_85.4 S4 MX4LA4**	522	**F703_85.4 P132 BE132MA4**	**F703_85.4 P132 BX132MA4**	523
17.1	3883	2.1	85.2	45000	**F803_85.2 S4 ME4LA4**	**F803_85.2 S4 MX4LA4**	525	**F803_85.2 P132 BE132MA4**	**F803_85.2 P132 BX132MA4**	526
19.1	3475	2.3	76.3	45000	**F803_76.3 S4 ME4LA4**	**F803_76.3 S4 MX4LA4**	525	**F803_76.3 P132 BE132MA4**	**F803_76.3 P132 BX132MA4**	526
19.8	3352	1.5	73.6	35000	**F703_73.6 S4 ME4LA4**	**F703_73.6 S4 MX4LA4**	522	**F703_73.6 P132 BE132MA4**	**F703_73.6 P132 BX132MA4**	523
20.7	3207	2.5	70.4	44700	**F803_70.4 S4 ME4LA4**	**F803_70.4 S4 MX4LA4**	525	**F803_70.4 P132 BE132MA4**	**F803_70.4 P132 BX132MA4**	526
21.3	3112	0.9	68.3	20000	**F603_68.3 S4 ME4LA4**	**F603_68.3 S4 MX4LA4**	518	**F603_68.3 P132 BE132MA4**	**F603_68.3 P132 BX132MA4**	519
21.4	3094	1.6	67.9	35000	**F703_67.9 S4 ME4LA4**	**F703_67.9 S4 MX4LA4**	522	**F703_67.9 P132 BE132MA4**	**F703_67.9 P132 BX132MA4**	523
23.1	2872	1.0	63.0	20000	**F603_63.0 S4 ME4LA4**	**F603_63.0 S4 MX4LA4**	518	**F603_63.0 P132 BE132MA4**	**F603_63.0 P132 BX132MA4**	519
23.3	2848	1.8	62.5	35000	**F703_62.5 S4 ME4LA4**	**F703_62.5 S4 MX4LA4**	522	**F703_62.5 P132 BE132MA4**	**F703_62.5 P132 BX132MA4**	523
23.7	2801	2.9	61.5	43500	**F803_61.5 S4 ME4LA4**	**F803_61.5 S4 MX4LA4**	525	**F803_61.5 P132 BE132MA4**	**F803_61.5 P132 BX132MA4**	526
25.2	2629	1.9	57.7	34900	**F703_57.7 S4 ME4LA4**	**F703_57.7 S4 MX4LA4**	522	**F703_57.7 P132 BE132MA4**	**F703_57.7 P132 BX132MA4**	523
25.6	2585	3.1	56.7	42600	**F803_56.7 S4 ME4LA4**	**F803_56.7 S4 MX4LA4**	525	**F803_56.7 P132 BE132MA4**	**F803_56.7 P132 BX132MA4**	526
28.1	2362	1.2	51.8	20000	**F603_51.8 S4 ME4LA4**	**F603_51.8 S4 MX4LA4**	518	**F603_51.8 P132 BE132MA4**	**F603_51.8 P132 BX132MA4**	519
29.7	2231	2.2	49.0	33800	**F703_49.0 S4 ME4LA4**	**F703_49.0 S4 MX4LA4**	522	**F703_49.0 P132 BE132MA4**	**F703_49.0 P132 BX132MA4**	523
30	2180	1.3	47.8	20000	**F603_47.8 S4 ME4LA4**	**F603_47.8 S4 MX4LA4**	518	**F603_47.8 P132 BE132MA4**	**F603_47.8 P132 BX132MA4**	519
32	2059	2.4	45.2	33200	**F703_45.2 S4 ME4LA4**	**F703_45.2 S4 MX4LA4**	522	**F703_45.2 P132 BE132MA4**	**F703_45.2 P132 BX132MA4**	523
35	1918	1.5	42.1	20000	**F603_42.1 S4 ME4LA4**	**F603_42.1 S4 MX4LA4**	518	**F603_42.1 P132 BE132MA4**	**F603_42.1 P132 BX132MA4**	519
37	1770	1.6	38.8	20000	**F603_38.8 S4 ME4LA4**	**F603_38.8 S4 MX4LA4**	518	**F603_38.8 P132 BE132MA4**	**F603_38.8 P132 BX132MA4**	519
39	1729	1.0	37.1	9090	**F512_37.1 S4 ME4LA4**	**F512_37.1 S4 MX4LA4**	514	**F512_37.1 P132 BE132MA4**	**F512_37.1 P132 BX132MA4**	515
45	1462	2.0	32.1	20000	**F603_32.1 S4 ME4LA4**	**F603_32.1 S4 MX4LA4**	518	**F603_32.1 P132 BE132MA4**	**F603_32.1 P132 BX132MA4**	519
48	1398	1.2	30.0	9010	**F512_30.0 S4 ME4LA4**	**F512_30.0 S4 MX4LA4**	514	**F512_30.0 P132 BE132MA4**	**F512_30.0 P132 BX132MA4**	515
49	1350	2.1	29.6	20000	**F603_29.6 S4 ME4LA4**	**F603_29.6 S4 MX4LA4**	518	**F603_29.6 P132 BE132MA4**	**F603_29.6 P132 BX132MA4**	519
57	1158	1.6	25.4	20000	**F603_25.4 S4 ME4LA4**	**F603_25.4 S4 MX4LA4**	518	**F603_25.4 P132 BE132MA4**	**F603_25.4 P132 BX132MA4**	519
60	1123	1.0	24.1	5500	**F412_24.1 S4 ME4LA4**	**F412_24.1 S4 MX4LA4**	510	**F412_24.1 P132 BE132MA4**	**F412_24.1 P132 BX132MA4**	511
61	1108	1.5	23.8	8810	**F512_23.8 S4 ME4LA4**	**F512_23.8 S4 MX4LA4**	514	**F512_23.8 P132 BE132MA4**	**F512_23.8 P132 BX132MA4**	515
62	1069	1.8	23.5	20000	**F603_23.5 S4 ME4LA4**	**F603_23.5 S4 MX4LA4**	518	**F603_23.5 P132 BE132MA4**	**F603_23.5 P132 BX132MA4**	519
70	941	2.0	20.7	20000	**F603_20.7 S4 ME4LA4**	**F603_20.7 S4 MX4LA4**	518	**F603_20.7 P132 BE132MA4**	**F603_20.7 P132 BX132MA4**	519
76	869	2.2	19.1	20000	**F603_19.1 S4 ME4LA4**	**F603_19.1 S4 MX4LA4**	518	**F603_19.1 P132 BE132MA4**	**F603_19.1 P132 BX132MA4**	519
77	879	1.2	18.9	5630	**F412_18.9 S4 ME4LA4**	**F412_18.9 S4 MX4LA4**	510	**F412_18.9 P132 BE132MA4**	**F412_18.9 P132 BX132MA4**	511
77	876	1.8	18.8	8520	**F512_18.8 S4 ME4LA4**	**F512_18.8 S4 MX4LA4**	514	**F512_18.8 P132 BE132MA4**	**F512_18.8 P132 BX132MA4**	515
85	797	1.3	17.1	5650	**F412_17.1 S4 ME4LA4**	**F412_17.1 S4 MX4LA4**	510	**F412_17.1 P132 BE132MA4**	**F412_17.1 P132 BX132MA4**	511
93	715	2.7	15.7	20000	**F603_15.7 S4 ME4LA4**	**F603_15.7 S4 MX4LA4**	518	**F603_15.7 P132 BE132MA4**	**F603_15.7 P132 BX132MA4**	519
99	681	1.5	14.6	5630	**F412_14.6 S4 ME4LA4**	**F412_14.6 S4 MX4LA4**	510	**F412_14.6 P132 BE132MA4**	**F412_14.6 P132 BX132MA4**	511
101	660	2.9	14.5	20000	**F603_14.5 S4 ME4LA4**	**F603_14.5 S4 MX4LA4**	518	**F603_14.5 P132 BE132MA4**	**F603_14.5 P132 BX132MA4**	519
104	651	2.2	14.0	8080	**F512_14.0 S4 ME4LA4**	**F512_14.0 S4 MX4LA4**	514	**F512_14.0 P132 BE132MA4**	**F512_14.0 P132 BX132MA4**	515
104	649	0.9	13.9	3980	**F312_13.9 S4 ME4LA4**	**F312_13.9 S4 MX4LA4**	506	**F312_13.9 P132 BE132MA4**	**F312_13.9 P132 BX132MA4**	507
114	580	3.3	12.7	19900	**F603_12.7 S4 ME4LA4**	**F603_12.7 S4 MX4LA4**	518	**F603_12.7 P132 BE132MA4**	**F603_12.7 P132 BX132MA4**	519

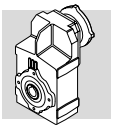

7.5 kW

n_2 min-1	M_2 Nm	S	i	R_{n2} N	IE2	IE3		IE2	IEC IE3	
114	592	1.0	12.7	3880	**F312_12.7 S4 ME4LA4**	**F312_12.7 S4 MX4LA4**	506	**F312_12.7 P132 BE132MA4**	**F312_12.7 P132 BX132MA4**	507
124	536	3.5	11.8	19500	**F603_11.8 S4 ME4LA4**	**F603_11.8 S4 MX4LA4**	518	**F603_11.8 P132 BE132MA4**	**F603_11.8 P132 BX132MA4**	519
131	517	2.6	11.1	7700	**F512_11.1 S4 ME4LA4**	**F512_11.1 S4 MX4LA4**	514	**F512_11.1 P132 BE132MA4**	**F512_11.1 P132 BX132MA4**	515
135	501	1.8	10.8	5490	**F412_10.8 S4 ME4LA4**	**F412_10.8 S4 MX4LA4**	510	**F412_10.8 P132 BE132MA4**	**F412_10.8 P132 BX132MA4**	511
135	500	1.2	10.7	3730	**F312_10.7 S4 ME4LA4**	**F312_10.7 S4 MX4LA4**	506	**F312_10.7 P132 BE132MA4**	**F312_10.7 P132 BX132MA4**	507
159	425	1.6	9.1	5410	**F412_9.1 S4 ME4LA4**	**F412_9.1 S4 MX4LA4**	510	**F412_9.1 P132 BE132MA4**	**F412_9.1 P132 BX132MA4**	511
161	421	2.6	9.1	7290	**F512_9.1 S4 ME4LA4**	**F512_9.1 S4 MX4LA4**	514	**F512_9.1 P132 BE132MA4**	**F512_9.1 P132 BX132MA4**	515
161	420	0.9	9.0	3770	**F312_9.0 S4 ME4LA4**	**F312_9.0 S4 MX4LA4**	506	**F312_9.0 P132 BE132MA4**	**F312_9.0 P132 BX132MA4**	507
177	383	1.0	8.2	3680	**F312_8.2 S4 ME4LA4**	**F312_8.2 S4 MX4LA4**	506	**F312_8.2 P132 BE132MA4**	**F312_8.2 P132 BX132MA4**	507
202	335	2.9	7.2	6900	**F512_7.2 S4 ME4LA4**	**F512_7.2 S4 MX4LA4**	514	**F512_7.2 P132 BE132MA4**	**F512_7.2 P132 BX132MA4**	515
209	323	1.2	6.9	3520	**F312_6.9 S4 ME4LA4**	**F312_6.9 S4 MX4LA4**	506	**F312_6.9 P132 BE132MA4**	**F312_6.9 P132 BX132MA4**	507
216	313	2.0	6.7	5140	**F412_6.7 S4 ME4LA4**	**F412_6.7 S4 MX4LA4**	510	**F412_6.7 P132 BE132MA4**	**F412_6.7 P132 BX132MA4**	511
272	251	2.9	10.8	4880	**F412_10.8 S4 ME4LA2**		510	**F412_10.8 P132 BE132SB2**		511
320	213	2.9	9.1	4730	**F412_9.1 S4 ME4LA2**		510	**F412_9.1 P132 BE132SB2**		511
435	156	3.3	6.7	4390	**F412_6.7 S4 ME4LA2**		510	**F412_6.7 P132 BE132SB2**		511

7.5 kW

n_2 min-1	M_2 Nm	S	i	R_{n2} N	IE3		IEC IE3	
4.0	15957	0.9	361.8	55000			**F904_361.8 P132 BXN132M4**	529
5.0	12838	1.1	291.1	55000			**F904_291.1 P132 BXN132M4**	529
5.4	11851	1.2	268.7	55000			**F904_268.7 P132 BXN132M4**	529
6.3	10204	1.4	231.4	55000			**F904_231.4 P132 BXN132M4**	529
6.8	9419	1.5	213.6	55000			**F904_213.6 P132 BXN132M4**	529
7.3	9114	0.9	200.0	45000			**F803_200.0 P132 BXN132M4**	526
7.5	8848	1.6	194.2	55000			**F903_194.2 P132 BXN132M4**	529
7.9	8413	1.0	184.6	45000			**F803_184.6 P132 BXN132M4**	526
8.1	8167	1.7	179.2	55000			**F903_179.2 P132 BXN132M4**	529
8.9	7420	1.9	162.8	55000			**F903_162.8 P132 BXN132M4**	529
9.1	7302	1.1	160.2	45000			**F803_160.2 P132 BXN132M4**	526
9.7	6849	2.0	150.3	55000			**F903_150.3 P132 BXN132M4**	529
9.8	6740	1.2	147.9	45000			**F803_147.9 P132 BXN132M4**	526
10.6	6259	2.2	137.3	55000			**F903_137.3 P132 BXN132M4**	529
11.0	6047	1.3	132.7	45000			**F803_132.7 P132 BXN132M4**	526
11.5	5777	2.4	126.8	55000			**F903_126.8 P132 BXN132M4**	529
11.9	5593	0.9	122.7	35000			**F703_122.7 P132 BXN132M4**	523
11.9	5582	1.4	122.5	45000			**F803_122.5 P132 BXN132M4**	526
12.8	5184	1.5	113.8	45000			**F803_113.8 P132 BXN132M4**	526
13.0	5101	2.7	111.9	55000			**F903_111.9 P132 BXN132M4**	529
13.3	4995	1.0	109.6	35000			**F703_109.6 P132 BXN132M4**	523
13.9	4785	1.7	105.0	45000			**F803_105.0 P132 BXN132M4**	526
14.1	4709	3.0	103.3	55000			**F903_103.3 P132 BXN132M4**	529
14.4	4611	1.1	101.2	35000			**F703_101.2 P132 BXN132M4**	523
15.2	4364	3.2	95.8	55000			**F903_95.8 P132 BXN132M4**	529
15.7	4215	1.2	92.5	35000			**F703_92.5 P132 BXN132M4**	523
15.8	4206	1.9	92.3	45000			**F803_92.3 P132 BXN132M4**	526
16.5	4028	3.5	88.4	55000			**F903_88.4 P132 BXN132M4**	529
17.0	3891	1.3	85.4	35000			**F703_85.4 P132 BXN132M4**	523
17.1	3883	2.1	85.2	45000			**F803_85.2 P132 BXN132M4**	526
19.1	3475	2.3	76.3	45000			**F803_76.3 P132 BXN132M4**	526
19.8	3352	1.5	73.6	35000			**F703_73.6 P132 BXN132M4**	523
20.7	3207	2.5	70.4	44700			**F803_70.4 P132 BXN132M4**	526
21.3	3112	0.9	68.3	20000			**F603_68.3 P132 BXN132M4**	519
21.4	3094	1.6	67.9	35000			**F703_67.9 P132 BXN132M4**	523
23.1	2872	1.0	63.0	20000			**F603_63.0 P132 BXN132M4**	519
23.3	2848	1.8	62.5	35000			**F703_62.5 P132 BXN132M4**	523
23.7	2801	2.9	61.5	43500			**F803_61.5 P132 BXN132M4**	526
25.2	2629	1.9	57.7	34900			**F703_57.7 P132 BXN132M4**	523
25.6	2585	3.1	56.7	42600			**F803_56.7 P132 BXN132M4**	526

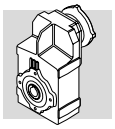

7.5 kW

n_2 min-1	M_2 Nm	S	i	R_{n2} N	IE3		IEC IE3	
28.1	2362	1.2	51.8	20000			**F603_51.8 P132 BXN132M4**	519
29.7	2231	2.2	49.0	33800			**F703_49.0 P132 BXN132M4**	523
30	2180	1.3	47.8	20000			**F603_47.8 P132 BXN132M4**	519
32	2059	2.4	45.2	33200			**F703_45.2 P132 BXN132M4**	523
35	1918	1.5	42.1	20000			**F603_42.1 P132 BXN132M4**	519
37	1770	1.6	38.8	20000			**F603_38.8 P132 BXN132M4**	519
39	1729	1.0	37.1	9090			**F512_37.1 P132 BXN132M4**	515
45	1462	2.0	32.1	20000			**F603_32.1 P132 BXN132M4**	519
48	1398	1.2	30.0	9010			**F512_30.0 P132 BXN132M4**	515
49	1350	2.1	29.6	20000			**F603_29.6 P132 BXN132M4**	519
57	1158	1.6	25.4	20000			**F603_25.4 P132 BXN132M4**	519
60	1123	1.0	24.1	5500			**F412_24.1 P132 BXN132M4**	511
61	1108	1.5	23.8	8810			**F512_23.8 P132 BXN132M4**	515
62	1069	1.8	23.5	20000			**F603_23.5 P132 BXN132M4**	519
70	941	2.0	20.7	20000			**F603_20.7 P132 BXN132M4**	519
76	869	2.2	19.1	20000			**F603_19.1 P132 BXN132M4**	519
77	879	1.2	18.9	5630			**F412_18.9 P132 BXN132M4**	511
77	876	1.8	18.8	8520			**F512_18.8 P132 BXN132M4**	515
85	797	1.3	17.1	5650			**F412_17.1 P132 BXN132M4**	511
93	715	2.7	15.7	20000			**F603_15.7 P132 BXN132M4**	519
99	681	1.5	14.6	5630			**F412_14.6 P132 BXN132M4**	511
101	660	2.9	14.5	20000			**F603_14.5 P132 BXN132M4**	519
104	651	2.2	14.0	8080			**F512_14.0 P132 BXN132M4**	515
104	649	0.9	13.9	3980			**F312_13.9 P132 BXN132M4**	507
114	580	3.3	12.7	19900			**F603_12.7 P132 BXN132M4**	519
114	592	1.0	12.7	3880			**F312_12.7 P132 BXN132M4**	507
124	536	3.5	11.8	19500			**F603_11.8 P132 BXN132M4**	519
131	517	2.6	11.1	7700			**F512_11.1 P132 BXN132M4**	515
135	501	1.8	10.8	5490			**F412_10.8 P132 BXN132M4**	511
135	500	1.2	10.7	3730			**F312_10.7 P132 BXN132M4**	507
159	425	1.6	9.1	5410			**F412_9.1 P132 BXN132M4**	511
161	421	2.6	9.1	7290			**F512_9.1 P132 BXN132M4**	515
161	420	0.9	9.0	3770			**F312_9.0 P132 BXN132M4**	507
177	383	1.0	8.2	3680			**F312_8.2 P132 BXN132M4**	507
202	335	2.9	7.2	6900			**F512_7.2 P132 BXN132M4**	515
209	323	1.2	6.9	3520			**F312_6.9 P132 BXN132M4**	507
216	313	2.0	6.7	5140			**F412_6.7 P132 BXN132M4**	511

9.2 kW

n_2 min-1	M_2 Nm	S	i	R_{n2} N	IE2	IE3		IEC IE2	IEC IE3	
5.0	15983	0.9	291.1	55000	**F904_291.1 S4 ME4LB4**		528	**F904_291.1 P132 BE132MB4**	**F904_291.1 P160 BX160MA4**	529
5.4	14753	0.9	268.7	55000	**F904_268.7 S4 ME4LB4**		528	**F904_268.7 P132 BE132MB4**	**F904_268.7 P160 BX160MA4**	529
6.3	12703	1.1	231.4	55000	**F904_231.4 S4 ME4LB4**		528	**F904_231.4 P132 BE132MB4**	**F904_231.4 P160 BX160MA4**	529
6.8	11726	1.2	213.6	55000	**F904_213.6 S4 ME4LB4**		528	**F904_213.6 P132 BE132MB4**	**F904_213.6 P160 BX160MA4**	529
7.5	11014	1.3	194.2	55000	**F903_194.2 S4 ME4LB4**	**F903_194.2 S5 MX5SA4**	528	**F903_194.2 P132 BE132MB4**	**F903_194.2 P160 BX160MA4**	529
8.1	10167	1.4	179.2	55000	**F903_179.2 S4 ME4LB4**	**F903_179.2 S5 MX5SA4**	528	**F903_179.2 P132 BE132MB4**	**F903_179.2 P160 BX160MA4**	529
8.9	9237	1.5	162.8	55000	**F903_162.8 S4 ME4LB4**	**F903_162.8 S5 MX5SA4**	528	**F903_162.8 P132 BE132MB4**	**F903_162.8 P160 BX160MA4**	529
9.0	9090	0.9	160.2	45000	**F803_160.2 S4 ME4LB4**	**F803_160.2 S5 MX5SA4**	525	**F803_160.2 P132 BE132MB4**	**F803_160.2 P160 BX160MA4**	526
9.6	8527	1.6	150.3	55000	**F903_150.3 S4 ME4LB4**	**F903_150.3 S5 MX5SA4**	528	**F903_150.3 P132 BE132MB4**	**F903_150.3 P160 BX160MA4**	529
9.8	8390	1.0	147.9	45000	**F803_147.9 S4 ME4LB4**	**F803_147.9 S5 MX5SA4**	525	**F803_147.9 P132 BE132MB4**	**F803_147.9 P160 BX160MA4**	526
10.6	7791	1.8	137.3	55000	**F903_137.3 S4 ME4LB4**	**F903_137.3 S5 MX5SA4**	528	**F903_137.3 P132 BE132MB4**	**F903_137.3 P160 BX160MA4**	529
10.9	7528	1.1	132.7	45000	**F803_132.7 S4 ME4LB4**	**F803_132.7 S5 MX5SA4**	525	**F803_132.7 P132 BE132MB4**	**F803_132.7 P160 BX160MA4**	526
11.4	7192	1.9	126.8	55000	**F903_126.8 S4 ME4LB4**	**F903_126.8 S5 MX5SA4**	528	**F903_126.8 P132 BE132MB4**	**F903_126.8 P160 BX160MA4**	529
11.8	6949	1.2	122.5	45000	**F803_122.5 S4 ME4LB4**	**F803_122.5 S5 MX5SA4**	525	**F803_122.5 P132 BE132MB4**	**F803_122.5 P160 BX160MA4**	526
12.7	6453	1.2	113.8	45000	**F803_113.8 S4 ME4LB4**	**F803_113.8 S5 MX5SA4**	525	**F803_113.8 P132 BE132MB4**	**F803_113.8 P160 BX160MA4**	526

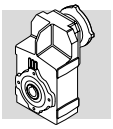

9.2 kW

n_2 min-1	M_2 Nm	S	i	R_{n2} N	IE2	IE3		IE2	IE3	
13.0	6351	2.2	111.9	55000	**F903_111.9 S4 ME4LB4**	**F903_111.9 S5 MX5SA4**	528	**F903_111.9 P132 BE132MB4**	**F903_111.9 P160 BX160MA4**	529
13.8	5957	1.3	105.0	45000	**F803_105.0 S4 ME4LB4**	**F803_105.0 S5 MX5SA4**	525	**F803_105.0 P132 BE132MB4**	**F803_105.0 P160 BX160MA4**	526
14.0	5862	2.4	103.3	55000	**F903_103.3 S4 ME4LB4**	**F903_103.3 S5 MX5SA4**	528	**F903_103.3 P132 BE132MB4**	**F903_103.3 P160 BX160MA4**	529
15.1	5432	2.6	95.8	55000	**F903_95.8 S4 ME4LB4**	**F903_95.8 S5 MX5SA4**	528	**F903_95.8 P132 BE132MB4**	**F903_95.8 P160 BX160MA4**	529
15.7	5248	1.0	92.5	35000	**F703_92.5 S4 ME4LB4**	**F703_92.5 S5 MX5SA4**	522	**F703_92.5 P132 BE132MB4**	**F703_92.5 P160 BX160MA4**	523
15.7	5237	1.5	92.3	45000	**F803_92.3 S4 ME4LB4**	**F803_92.3 S5 MX5SA4**	525	**F803_92.3 P132 BE132MB4**	**F803_92.3 P160 BX160MA4**	526
16.4	5015	2.8	88.4	55000	**F903_88.4 S4 ME4LB4**	**F903_88.4 S5 MX5SA4**	528	**F903_88.4 P132 BE132MB4**	**F903_88.4 P160 BX160MA4**	529
17.0	4844	1.0	85.4	35000	**F703_85.4 S4 ME4LB4**	**F703_85.4 S5 MX5SA4**	522	**F703_85.4 P132 BE132MB4**	**F703_85.4 P160 BX160MA4**	523
17.0	4834	1.7	85.2	45000	**F803_85.2 S4 ME4LB4**	**F803_85.2 S5 MX5SA4**	525	**F803_85.2 P132 BE132MB4**	**F803_85.2 P160 BX160MA4**	526
18.9	4348	3.2	76.7	55000	**F903_76.7 S4 ME4LB4**	**F903_76.7 S5 MX5SA4**	528	**F903_76.7 P132 BE132MB4**	**F903_76.7 P160 BX160MA4**	529
19.0	4326	1.8	76.3	44100	**F803_76.3 S4 ME4LB4**	**F803_76.3 S5 MX5SA4**	525	**F803_76.3 P132 BE132MB4**	**F803_76.3 P160 BX160MA4**	526
19.7	4173	1.2	73.6	35000	**F703_73.6 S4 ME4LB4**	**F703_73.6 S5 MX5SA4**	522	**F703_73.6 P132 BE132MB4**	**F703_73.6 P160 BX160MA4**	523
20.5	4014	3.5	70.8	55000	**F903_70.8 S4 ME4LB4**	**F903_70.8 S5 MX5SA4**	528	**F903_70.8 P132 BE132MB4**	**F903_70.8 P160 BX160MA4**	529
20.6	3993	2.0	70.4	43700	**F803_70.4 S4 ME4LB4**	**F803_70.4 S5 MX5SA4**	525	**F803_70.4 P132 BE132MB4**	**F803_70.4 P160 BX160MA4**	526
21.4	3852	1.3	67.9	34600	**F703_67.9 S4 ME4LB4**	**F703_67.9 S5 MX5SA4**	522	**F703_67.9 P132 BE132MB4**	**F703_67.9 P160 BX160MA4**	523
23.2	3546	1.4	62.5	34200	**F703_62.5 S4 ME4LB4**	**F703_62.5 S5 MX5SA4**	522	**F703_62.5 P132 BE132MB4**	**F703_62.5 P160 BX160MA4**	523
23.6	3487	2.3	61.5	42200	**F803_61.5 S4 ME4LB4**	**F803_61.5 S5 MX5SA4**	525	**F803_61.5 P132 BE132MB4**	**F803_61.5 P160 BX160MA4**	526
25.1	3273	1.5	57.7	33700	**F703_57.7 S4 ME4LB4**	**F703_57.7 S5 MX5SA4**	522	**F703_57.7 P132 BE132MB4**	**F703_57.7 P160 BX160MA4**	523
25.6	3218	2.5	56.7	41400	**F803_56.7 S4 ME4LB4**	**F803_56.7 S5 MX5SA4**	525	**F803_56.7 P132 BE132MB4**	**F803_56.7 P160 BX160MA4**	526
28.0	2940	1.0	51.8	20000	**F603_51.8 S4 ME4LB4**	**F603_51.8 S5 MX5SA4**	518	**F603_51.8 P132 BE132MB4**	**F603_51.8 P160 BX160MA4**	519
29.6	2777	1.8	49.0	32800	**F703_49.0 S4 ME4LB4**	**F703_49.0 S5 MX5SA4**	522	**F703_49.0 P132 BE132MB4**	**F703_49.0 P160 BX160MA4**	523
30	2714	1.1	47.8	20000	**F603_47.8 S4 ME4LB4**	**F603_47.8 S5 MX5SA4**	518	**F603_47.8 P132 BE132MB4**	**F603_47.8 P160 BX160MA4**	519
32	2564	2.0	45.2	32300	**F703_45.2 S4 ME4LB4**	**F703_45.2 S5 MX5SA4**	522	**F703_45.2 P132 BE132MB4**	**F703_45.2 P160 BX160MA4**	523
34	2387	1.2	42.1	20000	**F603_42.1 S4 ME4LB4**	**F603_42.1 S5 MX5SA4**	518	**F603_42.1 P132 BE132MB4**	**F603_42.1 P160 BX160MA4**	519
37	2204	1.3	38.8	20000	**F603_38.8 S4 ME4LB4**	**F603_38.8 S5 MX5SA4**	518	**F603_38.8 P132 BE132MB4**	**F603_38.8 P160 BX160MA4**	519
45	1820	1.6	32.1	20000	**F603_32.1 S4 ME4LB4**	**F603_32.1 S5 MX5SA4**	518	**F603_32.1 P132 BE132MB4**	**F603_32.1 P160 BX160MA4**	519
48	1741	1.0	30.0	8210	**F512_30.0 S4 ME4LB4**	**F512_30.0 S5 MX5SA4**	514	**F512_30.0 P132 BE132MB4**	**F512_30.0 P160 BX160MA4**	515
49	1680	1.7	29.6	20000	**F603_29.6 S4 ME4LB4**	**F603_29.6 S5 MX5SA4**	518	**F603_29.6 P132 BE132MB4**	**F603_29.6 P160 BX160MA4**	519
57	1442	1.3	25.4	20000	**F603_25.4 S4 ME4LB4**	**F603_25.4 S5 MX5SA4**	518	**F603_25.4 P132 BE132MB4**	**F603_25.4 P160 BX160MA4**	519
59	1393	2.9	24.6	28300	**F703_24.6 S4 ME4LB4**	**F703_24.6 S5 MX5SA4**	522	**F703_24.6 P132 BE132MB4**	**F703_24.6 P160 BX160MA4**	523
61	1379	1.2	23.8	8170	**F512_23.8 S4 ME4LB4**	**F512_23.8 S5 MX5SA4**	514	**F512_23.8 P132 BE132MB4**	**F512_23.8 P160 BX160MA4**	515
62	1331	1.4	23.5	20000	**F603_23.5 S4 ME4LB4**	**F603_23.5 S5 MX5SA4**	518	**F603_23.5 P132 BE132MB4**	**F603_23.5 P160 BX160MA4**	519
64	1282	3.4	22.6	27800	**F703_22.6 S4 ME4LB4**	**F703_22.6 S5 MX5SA4**	522	**F703_22.6 P132 BE132MB4**	**F703_22.6 P160 BX160MA4**	523
69	1184	3.4	20.9	27200	**F703_20.9 S4 ME4LB4**	**F703_20.9 S5 MX5SA4**	522	**F703_20.9 P132 BE132MB4**	**F703_20.9 P160 BX160MA4**	523
70	1172	1.6	20.7	20000	**F603_20.7 S4 ME4LB4**	**F603_20.7 S5 MX5SA4**	518	**F603_20.7 P132 BE132MB4**	**F603_20.7 P160 BX160MA4**	519
76	1082	1.8	19.1	20000	**F603_19.1 S4 ME4LB4**	**F603_19.1 S5 MX5SA4**	518	**F603_19.1 P132 BE132MB4**	**F603_19.1 P160 BX160MA4**	519
77	1095	1.0	18.9	4920	**F412_18.9 S4 ME4LB4**		510	**F412_18.9 P132 BE132MB4**		511
77	1091	1.4	18.8	8020	**F512_18.8 S4 ME4LB4**	**F512_18.8 S5 MX5SA4**	514	**F512_18.8 P132 BE132MB4**	**F512_18.8 P160 BX160MA4**	515
85	992	1.1	17.1	5000	**F412_17.1 S4 ME4LB4**		510	**F412_17.1 P132 BE132MB4**		511
92	890	2.1	15.7	20000	**F603_15.7 S4 ME4LB4**	**F603_15.7 S5 MX5SA4**	518	**F603_15.7 P132 BE132MB4**	**F603_15.7 P160 BX160MA4**	519
99	848	1.2	14.6	5070	**F412_14.6 S4 ME4LB4**		510	**F412_14.6 P132 BE132MB4**		511
100	821	2.3	14.5	20000	**F603_14.5 S4 ME4LB4**	**F603_14.5 S5 MX5SA4**	518	**F603_14.5 P132 BE132MB4**	**F603_14.5 P160 BX160MA4**	519
104	810	1.8	14.0	7700	**F512_14.0 S4 ME4LB4**	**F512_14.0 S5 MX5SA4**	514	**F512_14.0 P132 BE132MB4**	**F512_14.0 P160 BX160MA4**	515
114	722	2.6	12.7	19700	**F603_12.7 S4 ME4LB4**	**F603_12.7 S5 MX5SA4**	518	**F603_12.7 P132 BE132MB4**	**F603_12.7 P160 BX160MA4**	519
123	667	2.8	11.8	19300	**F603_11.8 S4 ME4LB4**	**F603_11.8 S5 MX5SA4**	518	**F603_11.8 P132 BE132MB4**	**F603_11.8 P160 BX160MA4**	519
131	644	2.1	11.1	7400	**F512_11.1 S4 ME4LB4**	**F512_11.1 S5 MX5SA4**	514	**F512_11.1 P132 BE132MB4**	**F512_11.1 P160 BX160MA4**	515
135	624	1.4	10.8	5080	**F412_10.8 S4 ME4LB4**		510	**F412_10.8 P132 BE132MB4**		511
135	623	1.0	10.7	3660	**F312_10.7 S4 ME4LB4**		506	**F312_10.7 P132 BE132MB4**		507
149	551	3.5	9.7	18400	**F603_9.7 S4 ME4LB4**	**F603_9.7 S5 MX5SA4**	518	**F603_9.7 P132 BE132MB4**	**F603_9.7 P160 BX160MA4**	519
159	529	1.3	9.1	5080	**F412_9.1 S4 ME4LB4**		510	**F412_9.1 P132 BE132MB4**		511
160	525	2.1	9.1	7040	**F512_9.1 S4 ME4LB4**	**F512_9.1 S5 MX5SA4**	514	**F512_9.1 P132 BE132MB4**	**F512_9.1 P160 BX160MA4**	515
202	417	2.3	7.2	6700	**F512_7.2 S4 ME4LB4**	**F512_7.2 S5 MX5SA4**	514	**F512_7.2 P132 BE132MB4**	**F512_7.2 P160 BX160MA4**	515
209	403	1.0	6.9	3450	**F312_6.9 S4 ME4LB4**		506	**F312_6.9 P132 BE132MB4**		507
216	390	1.6	6.7	4890	**F412_6.7 S4 ME4LB4**		510	**F412_6.7 P132 BE132MB4**		511
263	318	3.4	11.1	6340	**F512_11.1 S4 ME4LB2**		514	**F512_11.1 P132 BE132MB2**		515
271	308	2.4	10.8	4680	**F412_10.8 S4 ME4LB2**		510	**F412_10.8 P132 BE132MB2**		511
320	261	2.3	9.1	4560	**F412_9.1 S4 ME4LB2**		510	**F412_9.1 P132 BE132MB2**		511
323	259	3.5	9.1	5980	**F512_9.1 S4 ME4LB2**		514	**F512_9.1 P132 BE132MB2**		515
434	192	2.7	6.7	4270	**F412_6.7 S4 ME4LB2**		510	**F412_6.7 P132 BE132MB2**		511

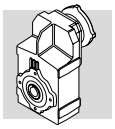

11 kW

n_2 min-1	M_2 Nm	S	i	R_{n2} N	IE2	IE3		IEC IE2	IEC IE3	
6.4	14994	0.9	231.4	55000	**F904_231.4 S5 ME5SA4**	**F904_231.4 S5 MX5SB4**	528	**F904_231.4 P160 BE160M4**	**F904_231.4 P160 BX160MB4**	529
6.9	13841	1.0	213.6	55000	**F904_213.6 S5 ME5SA4**	**F904_213.6 S5 MX5SB4**	528	**F904_213.6 P160 BE160M4**	**F904_213.6 P160 BX160MB4**	529
7.6	13001	1.1	194.2	55000	**F903_194.2 S5 ME5SA4**	**F903_194.2 S5 MX5SB4**	528	**F903_194.2 P160 BE160M4**	**F903_194.2 P160 BX160MB4**	529
8.2	12001	1.2	179.2	55000	**F903_179.2 S5 ME5SA4**	**F903_179.2 S5 MX5SB4**	528	**F903_179.2 P160 BE160M4**	**F903_179.2 P160 BX160MB4**	529
9.0	10903	1.3	162.8	55000	**F903_162.8 S5 ME5SA4**	**F903_162.8 S5 MX5SB4**	528	**F903_162.8 P160 BE160M4**	**F903_162.8 P160 BX160MB4**	529
9.8	10064	1.4	150.3	55000	**F903_150.3 S5 ME5SA4**	**F903_150.3 S5 MX5SB4**	528	**F903_150.3 P160 BE160M4**	**F903_150.3 P160 BX160MB4**	529
10.7	9196	1.5	137.3	55000	**F903_137.3 S5 ME5SA4**	**F903_137.3 S5 MX5SB4**	528	**F903_137.3 P160 BE160M4**	**F903_137.3 P160 BX160MB4**	529
11.1	8885	0.9	132.7	45000	**F803_132.7 S5 ME5SA4**	**F803_132.7 S5 MX5SB4**	525	**F803_132.7 P160 BE160M4**	**F803_132.7 P160 BX160MB4**	526
11.6	8489	1.6	126.8	55000	**F903_126.8 S5 ME5SA4**	**F903_126.8 S5 MX5SB4**	528	**F903_126.8 P160 BE160M4**	**F903_126.8 P160 BX160MB4**	529
12.0	8202	1.0	122.5	45000	**F803_122.5 S5 ME5SA4**	**F803_122.5 S5 MX5SB4**	525	**F803_122.5 P160 BE160M4**	**F803_122.5 P160 BX160MB4**	526
12.9	7617	1.1	113.8	45000	**F803_113.8 S5 ME5SA4**	**F803_113.8 S5 MX5SB4**	525	**F803_113.8 P160 BE160M4**	**F803_113.8 P160 BX160MB4**	526
13.1	7496	1.9	111.9	55000	**F903_111.9 S5 ME5SA4**	**F903_111.9 S5 MX5SB4**	528	**F903_111.9 P160 BE160M4**	**F903_111.9 P160 BX160MB4**	529
14.0	7031	1.1	105.0	44400	**F803_105.0 S5 ME5SA4**	**F803_105.0 S5 MX5SB4**	525	**F803_105.0 P160 BE160M4**	**F803_105.0 P160 BX160MB4**	526
14.2	6919	2.0	103.3	55000	**F903_103.3 S5 ME5SA4**	**F903_103.3 S5 MX5SB4**	528	**F903_103.3 P160 BE160M4**	**F903_103.3 P160 BX160MB4**	529
15.4	6412	2.2	95.8	55000	**F903_95.8 S5 ME5SA4**	**F903_95.8 S5 MX5SB4**	528	**F903_95.8 P160 BE160M4**	**F903_95.8 P160 BX160MB4**	529
15.9	6181	1.3	92.3	44100	**F803_92.3 S5 ME5SA4**	**F803_92.3 S5 MX5SB4**	525	**F803_92.3 P160 BE160M4**	**F803_92.3 P160 BX160MB4**	526
16.6	5919	2.4	88.4	55000	**F903_88.4 S5 ME5SA4**	**F903_88.4 S5 MX5SB4**	528	**F903_88.4 P160 BE160M4**	**F903_88.4 P160 BX160MB4**	529
17.3	5705	1.4	85.2	44000	**F803_85.2 S5 ME5SA4**	**F803_85.2 S5 MX5SB4**	525	**F803_85.2 P160 BE160M4**	**F803_85.2 P160 BX160MB4**	526
19.2	5132	2.7	76.7	55000	**F903_76.7 S5 ME5SA4**	**F903_76.7 S5 MX5SB4**	528	**F903_76.7 P160 BE160M4**	**F903_76.7 P160 BX160MB4**	529
19.3	5106	1.6	76.3	42800	**F803_76.3 S5 ME5SA4**	**F803_76.3 S5 MX5SB4**	525	**F803_76.3 P160 BE160M4**	**F803_76.3 P160 BX160MB4**	526
20.0	4925	1.0	73.6	33500	**F703_73.6 S5 ME5SA4**	**F703_73.6 S5 MX5SB4**	522	**F703_73.6 P160 BE160M4**	**F703_73.6 P160 BX160MB4**	523
20.8	4738	3.0	70.8	55000	**F903_70.8 S5 ME5SA4**	**F903_70.8 S5 MX5SB4**	528	**F903_70.8 P160 BE160M4**	**F903_70.8 P160 BX160MB4**	529
20.9	4713	1.7	70.4	42500	**F803_70.4 S5 ME5SA4**	**F803_70.4 S5 MX5SB4**	525	**F803_70.4 P160 BE160M4**	**F803_70.4 P160 BX160MB4**	526
21.6	4547	1.1	67.9	33100	**F703_67.9 S5 ME5SA4**	**F703_67.9 S5 MX5SB4**	522	**F703_67.9 P160 BE160M4**	**F703_67.9 P160 BX160MB4**	523
23.5	4185	1.2	62.5	32900	**F703_62.5 S5 ME5SA4**	**F703_62.5 S5 MX5SB4**	522	**F703_62.5 P160 BE160M4**	**F703_62.5 P160 BX160MB4**	523
23.7	4158	3.4	62.1	55000				**F903_62.1 P160 BE160M4**	**F903_62.1 P160 BX160MB4**	529
23.9	4115	1.9	61.5	41100	**F803_61.5 S5 ME5SA4**	**F803_61.5 S5 MX5SB4**	525	**F803_61.5 P160 BE160M4**	**F803_61.5 P160 BX160MB4**	526
25.5	3863	1.3	57.7	32500	**F703_57.7 S5 ME5SA4**	**F703_57.7 S5 MX5SB4**	522	**F703_57.7 P160 BE160M4**	**F703_57.7 P160 BX160MB4**	523
25.9	3799	2.1	56.7	40800	**F803_56.7 S5 ME5SA4**	**F803_56.7 S5 MX5SB4**	525	**F803_56.7 P160 BE160M4**	**F803_56.7 P160 BX160MB4**	526
29.9	3288	2.4	49.1	39100				**F803_49.1 P160 BE160M4**	**F803_49.1 P160 BX160MB4**	526
30	3278	1.5	49.0	31800	**F703_49.0 S5 ME5SA4**	**F703_49.0 S5 MX5SB4**	522	**F703_49.0 P160 BE160M4**	**F703_49.0 P160 BX160MB4**	523
31	3203	0.9	47.8	20000	**F603_47.8 S5 ME5SA4**	**F603_47.8 S5 MX5SB4**	518	**F603_47.8 P160 BE160M4**	**F603_47.8 P160 BX160MB4**	519
32	3035	2.6	45.3	38900				**F803_45.3 P160 BE160M4**	**F803_45.3 P160 BX160MB4**	526
33	3026	1.7	45.2	31300	**F703_45.2 S5 ME5SA4**	**F703_45.2 S5 MX5SB4**	522	**F703_45.2 P160 BE160M4**	**F703_45.2 P160 BX160MB4**	523
35	2818	1.0	42.1	20000	**F603_42.1 S5 ME5SA4**	**F603_42.1 S5 MX5SB4**	518	**F603_42.1 P160 BE160M4**	**F603_42.1 P160 BX160MB4**	519
38	2611	3.1	39.0	36400				**F803_39.0 P160 BE160M4**	**F803_39.0 P160 BX160MB4**	526
38	2601	1.1	38.8	20000	**F603_38.8 S5 ME5SA4**	**F603_38.8 S5 MX5SB4**	518	**F603_38.8 P160 BE160M4**	**F603_38.8 P160 BX160MB4**	519
38	2571	1.9	38.4	30200				**F703_38.4 P160 BE160M4**	**F703_38.4 P160 BX160MB4**	523
41	2411	3.3	36.0	35600				**F803_36.0 P160 BE160M4**	**F803_36.0 P160 BX160MB4**	526
41	2373	2.1	35.4	29600				**F703_35.4 P160 BE160M4**	**F703_35.4 P160 BX160MB4**	523
46	2148	1.3	32.1	20000	**F603_32.1 S5 ME5SA4**	**F603_32.1 S5 MX5SB4**	518	**F603_32.1 P160 BE160M4**	**F603_32.1 P160 BX160MB4**	519
49	2009	2.5	30.0	29000				**F703_30.0 P160 BE160M4**	**F703_30.0 P160 BX160MB4**	523
50	1983	1.5	29.6	20000	**F603_29.6 S5 ME5SA4**	**F603_29.6 S5 MX5SB4**	518	**F603_29.6 P160 BE160M4**	**F603_29.6 P160 BX160MB4**	519
53	1854	2.5	27.7	28300				**F703_27.7 P160 BE160M4**	**F703_27.7 P160 BX160MB4**	523
58	1702	1.1	25.4	20000	**F603_25.4 S5 ME5SA4**	**F603_25.4 S5 MX5SB4**	518	**F603_25.4 P160 BE160M4**	**F603_25.4 P160 BX160MB4**	519
60	1644	2.4	24.6	27800	**F703_24.6 S5 ME5SA4**	**F703_24.6 S5 MX5SB4**	522	**F703_24.6 P160 BE160M4**	**F703_24.6 P160 BX160MB4**	523
62	1628	1.0	23.8	7500	**F512_23.8 S5 ME5SA4**	**F512_23.8 S5 MX5SB4**	514	**F512_23.8 P160 BE160M4**	**F512_23.8 P160 BX160MB4**	515
63	1571	1.2	23.5	20000	**F603_23.5 S5 ME5SA4**	**F603_23.5 S5 MX5SB4**	518	**F603_23.5 P160 BE160M4**	**F603_23.5 P160 BX160MB4**	519
65	1514	2.9	22.6	27300	**F703_22.6 S5 ME5SA4**	**F703_22.6 S5 MX5SB4**	522	**F703_22.6 P160 BE160M4**	**F703_22.6 P160 BX160MB4**	523
70	1397	2.9	20.9	26800	**F703_20.9 S5 ME5SA4**	**F703_20.9 S5 MX5SB4**	522	**F703_20.9 P160 BE160M4**	**F703_20.9 P160 BX160MB4**	523
71	1383	1.4	20.7	20000	**F603_20.7 S5 ME5SA4**	**F603_20.7 S5 MX5SB4**	518	**F603_20.7 P160 BE160M4**	**F603_20.7 P160 BX160MB4**	519
77	1277	1.5	19.1	20000	**F603_19.1 S5 ME5SA4**	**F603_19.1 S5 MX5SB4**	518	**F603_19.1 P160 BE160M4**	**F603_19.1 P160 BX160MB4**	519
78	1287	1.2	18.8	7490	**F512_18.8 S5 ME5SA4**	**F512_18.8 S5 MX5SB4**	514	**F512_18.8 P160 BE160M4**	**F512_18.8 P160 BX160MB4**	515
94	1050	1.8	15.7	20000	**F603_15.7 S5 ME5SA4**	**F603_15.7 S5 MX5SB4**	518	**F603_15.7 P160 BE160M4**	**F603_15.7 P160 BX160MB4**	519
102	969	2.0	14.5	20000	**F603_14.5 S5 ME5SA4**	**F603_14.5 S5 MX5SB4**	518	**F603_14.5 P160 BE160M4**	**F603_14.5 P160 BX160MB4**	519
105	956	1.5	14.0	7310	**F512_14.0 S5 ME5SA4**	**F512_14.0 S5 MX5SB4**	514	**F512_14.0 P160 BE160M4**	**F512_14.0 P160 BX160MB4**	515
115	853	2.2	12.7	19400	**F603_12.7 S5 ME5SA4**	**F603_12.7 S5 MX5SB4**	518	**F603_12.7 P160 BE160M4**	**F603_12.7 P160 BX160MB4**	519
125	787	2.4	11.8	19000	**F603_11.8 S5 ME5SA4**	**F603_11.8 S5 MX5SB4**	518	**F603_11.8 P160 BE160M4**	**F603_11.8 P160 BX160MB4**	519
132	760	1.8	11.1	7090	**F512_11.1 S5 ME5SA4**	**F512_11.1 S5 MX5SB4**	514	**F512_11.1 P160 BE160M4**	**F512_11.1 P160 BX160MB4**	515
151	650	2.9	9.7	18200	**F603_9.7 S5 ME5SA4**	**F603_9.7 S5 MX5SB4**	518	**F603_9.7 P160 BE160M4**	**F603_9.7 P160 BX160MB4**	519
162	619	1.8	9.1	6770	**F512_9.1 S5 ME5SA4**	**F512_9.1 S5 MX5SB4**	514	**F512_9.1 P160 BE160M4**	**F512_9.1 P160 BX160MB4**	515
164	600	3.2	9.0	17800	**F603_9.0 S5 ME5SA4**	**F603_9.0 S5 MX5SB4**	518	**F603_9.0 P160 BE160M4**	**F603_9.0 P160 BX160MB4**	519
204	492	2.0	7.2	6490	**F512_7.2 S5 ME5SA4**	**F512_7.2 S5 MX5SB4**	514	**F512_7.2 P160 BE160M4**	**F512_7.2 P160 BX160MB4**	515
265	377	2.9	11.1	6170	**F512_11.1 S5 ME5SA2**		514	**F512_11.1 P160 BE160MA2**		515
325	307	2.9	9.1	5840	**F512_9.1 S5 ME5SA2**		514	**F512_9.1 P160 BE160MA2**		515
409	244	3.3	7.2	5510	**F512_7.2 S5 ME5SA2**		514	**F512_7.2 P160 BE160MA2**		515

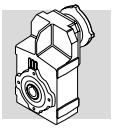

15 kW

n_2 min-1	M_2 Nm	S	i	R_{n2} N	IE2	IE3		IE2	IE3	
9.0	14840	0.9	162.8	55000	**F903_162.8 S5 ME5LA4**	**F903_162.8 S5 MX5LA4**	528	**F903_162.8 P160 BE160L4**	**F903_162.8 P160 BX160L4**	529
9.8	13699	1.0	150.3	55000	**F903_150.3 S5 ME5LA4**	**F903_150.3 S5 MX5LA4**	528	**F903_150.3 P160 BE160L4**	**F903_150.3 P160 BX160L4**	529
10.7	12517	1.1	137.3	55000	**F903_137.3 S5 ME5LA4**	**F903_137.3 S5 MX5LA4**	528	**F903_137.3 P160 BE160L4**	**F903_137.3 P160 BX160L4**	529
11.6	11554	1.2	126.8	55000	**F903_126.8 S5 ME5LA4**	**F903_126.8 S5 MX5LA4**	528	**F903_126.8 P160 BE160L4**	**F903_126.8 P160 BX160L4**	529
13.1	10203	1.4	111.9	55000	**F903_111.9 S5 ME5LA4**	**F903_111.9 S5 MX5LA4**	528	**F903_111.9 P160 BE160L4**	**F903_111.9 P160 BX160L4**	529
14.2	9418	1.5	103.3	55000	**F903_103.3 S5 ME5LA4**	**F903_103.3 S5 MX5LA4**	528	**F903_103.3 P160 BE160L4**	**F903_103.3 P160 BX160L4**	529
15.4	8728	1.6	95.8	55000	**F903_95.8 S5 ME5LA4**	**F903_95.8 S5 MX5LA4**	528	**F903_95.8 P160 BE160L4**	**F903_95.8 P160 BX160L4**	529
15.9	8413	1.0	92.3	41300	**F803_92.3 S5 ME5LA4**	**F803_92.3 S5 MX5LA4**	525	**F803_92.3 P160 BE160L4**	**F803_92.3 P160 BX160L4**	526
16.6	8056	1.7	88.4	55000	**F903_88.4 S5 ME5LA4**	**F903_88.4 S5 MX5LA4**	528	**F903_88.4 P160 BE160L4**	**F903_88.4 P160 BX160L4**	529
17.3	7766	1.0	85.2	40800	**F803_85.2 S5 ME5LA4**	**F803_85.2 S5 MX5LA4**	525	**F803_85.2 P160 BE160L4**	**F803_85.2 P160 BX160L4**	526
19.2	6986	2.0	76.7	55000	**F903_76.7 S5 ME5LA4**	**F903_76.7 S5 MX5LA4**	528	**F903_76.7 P160 BE160L4**	**F903_76.7 P160 BX160L4**	529
19.3	6949	1.2	76.3	40500	**F803_76.3 S5 ME5LA4**	**F803_76.3 S5 MX5LA4**	525	**F803_76.3 P160 BE160L4**	**F803_76.3 P160 BX160L4**	526
20.8	6449	2.2	70.8	55000	**F903_70.8 S5 ME5LA4**	**F903_70.8 S5 MX5LA4**	528	**F903_70.8 P160 BE160L4**	**F903_70.8 P160 BX160L4**	529
20.9	6415	1.2	70.4	39900	**F803_70.4 S5 ME5LA4**	**F803_70.4 S5 MX5LA4**	525	**F803_70.4 P160 BE160L4**	**F803_70.4 P160 BX160L4**	526
23.5	5696	0.9	62.5	31300	**F703_62.5 S5 ME5LA4**	**F703_62.5 S5 MX5LA4**	522	**F703_62.5 P160 BE160L4**	**F703_62.5 P160 BX160L4**	523
23.7	5660	2.5	62.1	55000				**F903_62.1 P160 BE160L4**	**F903_62.1 P160 BX160L4**	529
23.9	5601	1.4	61.5	38700	**F803_61.5 S5 ME5LA4**	**F803_61.5 S5 MX5LA4**	525	**F803_61.5 P160 BE160L4**	**F803_61.5 P160 BX160L4**	526
25.5	5258	1.0	57.7	29700	**F703_57.7 S5 ME5LA4**	**F703_57.7 S5 MX5LA4**	522	**F703_57.7 P160 BE160L4**	**F703_57.7 P160 BX160L4**	523
25.6	5224	2.7	57.3	55000				**F903_57.3 P160 BE160L4**	**F903_57.3 P160 BX160L4**	529
25.9	5170	1.5	56.7	38600	**F803_56.7 S5 ME5LA4**	**F803_56.7 S5 MX5LA4**	525	**F803_56.7 P160 BE160L4**	**F803_56.7 P160 BX160L4**	526
29.5	4548	3.1	49.9	54400				**F903_49.9 P160 BE160L4**	**F903_49.9 P160 BX160L4**	529
29.9	4476	1.8	49.1	37800				**F803_49.1 P160 BE160L4**	**F803_49.1 P160 BX160L4**	526
30	4462	1.1	49.0	29400	**F703_49.0 S5 ME5LA4**	**F703_49.0 S5 MX5LA4**	522	**F703_49.0 P160 BE160L4**	**F703_49.0 P160 BX160L4**	523
32	4198	3.3	46.1	53500				**F903_46.1 P160 BE160L4**	**F903_46.1 P160 BX160L4**	529
32	4131	1.9	45.3	37200				**F803_45.3 P160 BE160L4**	**F803_45.3 P160 BX160L4**	526
33	4119	1.2	45.2	29100	**F703_45.2 S5 ME5LA4**	**F703_45.2 S5 MX5LA4**	522	**F703_45.2 P160 BE160L4**	**F703_45.2 P160 BX160L4**	523
38	3554	2.3	39.0	35800				**F803_39.0 P160 BE160L4**	**F803_39.0 P160 BX160L4**	526
38	3499	1.4	38.4	28600				**F703_38.4 P160 BE160L4**	**F703_38.4 P160 BX160L4**	523
41	3281	2.4	36.0	35200				**F803_36.0 P160 BE160L4**	**F803_36.0 P160 BX160L4**	526
41	3230	1.5	35.4	28200				**F703_35.4 P160 BE160L4**	**F703_35.4 P160 BX160L4**	523
46	2924	1.0	32.1	20000	**F603_32.1 S5 ME5LA4**	**F603_32.1 S5 MX5LA4**	518	**F603_32.1 P160 BE160L4**	**F603_32.1 P160 BX160L4**	519
49	2734	1.8	30.0	27700				**F703_30.0 P160 BE160L4**	**F703_30.0 P160 BX160L4**	523
50	2699	1.1	29.6	20000	**F603_29.6 S5 ME5LA4**	**F603_29.6 S5 MX5LA4**	518	**F603_29.6 P160 BE160L4**	**F603_29.6 P160 BX160L4**	519
53	2524	1.9	27.7	27100				**F703_27.7 P160 BE160L4**	**F703_27.7 P160 BX160L4**	523
58	2299	2.7	25.2	32900	**F803_25.2 S5 ME5LA4**	**F803_25.2 S5 MX5LA4**	525	**F803_25.2 P160 BE160L4**	**F803_25.2 P160 BX160L4**	526
60	2238	1.8	24.6	26500	**F703_24.6 S5 ME5LA4**	**F703_24.6 S5 MX5LA4**	522	**F703_24.6 P160 BE160L4**	**F703_24.6 P160 BX160L4**	523
63	2138	0.9	23.5	20000	**F603_23.5 S5 ME5LA4**	**F603_23.5 S5 MX5LA4**	518	**F603_23.5 P160 BE160L4**	**F603_23.5 P160 BX160L4**	519
65	2060	2.1	22.6	26200	**F703_22.6 S5 ME5LA4**	**F703_22.6 S5 MX5LA4**	522	**F703_22.6 P160 BE160L4**	**F703_22.6 P160 BX160L4**	523
67	2008	3.3	22.0	31900	**F803_22.0 S5 ME5LA4**	**F803_22.0 S5 MX5LA4**	525	**F803_22.0 P160 BE160L4**	**F803_22.0 P160 BX160L4**	526
70	1902	2.1	20.9	25700	**F703_20.9 S5 ME5LA4**	**F703_20.9 S5 MX5LA4**	522	**F703_20.9 P160 BE160L4**	**F703_20.9 P160 BX160L4**	523
71	1883	1.0	20.7	20000	**F603_20.7 S5 ME5LA4**	**F603_20.7 S5 MX5LA4**	518	**F603_20.7 P160 BE160L4**	**F603_20.7 P160 BX160L4**	519
72	1853	3.3	20.3	31300	**F803_20.3 S5 ME5LA4**	**F803_20.3 S5 MX5LA4**	525	**F803_20.3 P160 BE160L4**	**F803_20.3 P160 BX160L4**	526
77	1738	1.1	19.1	20000	**F603_19.1 S5 ME5LA4**	**F603_19.1 S5 MX5LA4**	518	**F603_19.1 P160 BE160L4**	**F603_19.1 P160 BX160L4**	519
78	1752	0.9	18.8	6800	**F512_18.8 S5 ME5LA4**	**F512_18.8 S5 MX5LA4**	514	**F512_18.8 P160 BE160L4**	**F512_18.8 P160 BX160L4**	515
83	1614	2.7	17.7	24900	**F703_17.7 S5 ME5LA4**	**F703_17.7 S5 MX5LA4**	522	**F703_17.7 P160 BE160L4**	**F703_17.7 P160 BX160L4**	523
90	1490	2.7	16.3	24400	**F703_16.3 S5 ME5LA4**	**F703_16.3 S5 MX5LA4**	522	**F703_16.3 P160 BE160L4**	**F703_16.3 P160 BX160L4**	523
94	1429	1.3	15.7	19600	**F603_15.7 S5 ME5LA4**	**F603_15.7 S5 MX5LA4**	518	**F603_15.7 P160 BE160L4**	**F603_15.7 P160 BX160L4**	519
102	1319	1.4	14.5	19200	**F603_14.5 S5 ME5LA4**	**F603_14.5 S5 MX5LA4**	518	**F603_14.5 P160 BE160L4**	**F603_14.5 P160 BX160L4**	519
105	1301	1.1	14.0	6450	**F512_14.0 S5 ME5LA4**	**F512_14.0 S5 MX5LA4**	514	**F512_14.0 P160 BE160L4**	**F512_14.0 P160 BX160L4**	515
106	1266	3.1	13.9	23600	**F703_13.9 S5 ME5LA4**	**F703_13.9 S5 MX5LA4**	522	**F703_13.9 P160 BE160L4**	**F703_13.9 P160 BX160L4**	523
115	1168	3.1	12.8	23100	**F703_12.8 S5 ME5LA4**	**F703_12.8 S5 MX5LA4**	522	**F703_12.8 P160 BE160L4**	**F703_12.8 P160 BX160L4**	523
115	1160	1.6	12.7	18800	**F603_12.7 S5 ME5LA4**	**F603_12.7 S5 MX5LA4**	518	**F603_12.7 P160 BE160L4**	**F603_12.7 P160 BX160L4**	519
125	1071	1.8	11.8	18400	**F603_11.8 S5 ME5LA4**	**F603_11.8 S5 MX5LA4**	518	**F603_11.8 P160 BE160L4**	**F603_11.8 P160 BX160L4**	519
132	1034	1.3	11.1	6000	**F512_11.1 S5 ME5LA4**	**F512_11.1 S5 MX5LA4**	514	**F512_11.1 P160 BE160L4**	**F512_11.1 P160 BX160L4**	515
135	989	3.5	10.9	22300	**F703_10.9 S5 ME5LA4**	**F703_10.9 S5 MX5LA4**	522	**F703_10.9 P160 BE160L4**	**F703_10.9 P160 BX160L4**	523
147	913	3.5	10.0	21800	**F703_10.0 S5 ME5LA4**	**F703_10.0 S5 MX5LA4**	522	**F703_10.0 P160 BE160L4**	**F703_10.0 P160 BX160L4**	523
151	885	2.1	9.7	17700	**F603_9.7 S5 ME5LA4**	**F603_9.7 S5 MX5LA4**	518	**F603_9.7 P160 BE160L4**	**F603_9.7 P160 BX160L4**	519
162	843	1.3	9.1	5800	**F512_9.1 S5 ME5LA4**	**F512_9.1 S5 MX5LA4**	514	**F512_9.1 P160 BE160L4**	**F512_9.1 P160 BX160L4**	515
164	817	2.3	9.0	17300	**F603_9.0 S5 ME5LA4**	**F603_9.0 S5 MX5LA4**	518	**F603_9.0 P160 BE160L4**	**F603_9.0 P160 BX160L4**	519
204	670	1.5	7.2	5640	**F512_7.2 S5 ME5LA4**	**F512_7.2 S5 MX5LA4**	514	**F512_7.2 P160 BE160L4**	**F512_7.2 P160 BX160L4**	515

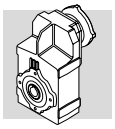

18.5 kW

n_2 min-1	M_2 Nm	S	i	R_{n2} N			IEC IE2	IEC IE3	
10.7	15327	0.9	137.3	55000			**F903_137.3 P180 BE180M4**	**F903_137.3 P180 BX180M4**	529
11.6	14148	1.0	126.8	55000			**F903_126.8 P180 BE180M4**	**F903_126.8 P180 BX180M4**	529
13.1	12493	1.1	111.9	55000			**F903_111.9 P180 BE180M4**	**F903_111.9 P180 BX180M4**	529
14.2	11532	1.2	103.3	55000			**F903_103.3 P180 BE180M4**	**F903_103.3 P180 BX180M4**	529
15.4	10687	1.3	95.8	55000			**F903_95.8 P180 BE180M4**	**F903_95.8 P180 BX180M4**	529
16.6	9865	1.4	88.4	55000			**F903_88.4 P180 BE180M4**	**F903_88.4 P180 BX180M4**	529
19.2	8554	1.6	76.7	55000			**F903_76.7 P180 BE180M4**	**F903_76.7 P180 BX180M4**	529
19.3	8510	0.9	76.3	38100			**F803_76.3 P180 BE180M4**	**F803_76.3 P180 BX180M4**	526
20.8	7896	1.8	70.8	55000			**F903_70.8 P180 BE180M4**	**F903_70.8 P180 BX180M4**	529
20.9	7855	1.0	70.4	37600			**F803_70.4 P180 BE180M4**	**F803_70.4 P180 BX180M4**	526
23.7	6930	2.0	62.1	55000			**F903_62.1 P180 BE180M4**	**F903_62.1 P180 BX180M4**	529
23.9	6859	1.2	61.5	37400			**F803_61.5 P180 BE180M4**	**F803_61.5 P180 BX180M4**	526
25.6	6397	2.2	57.3	55000			**F903_57.3 P180 BE180M4**	**F903_57.3 P180 BX180M4**	529
25.9	6331	1.3	56.7	36800			**F803_56.7 P180 BE180M4**	**F803_56.7 P180 BX180M4**	526
29.5	5568	2.5	49.9	55000			**F903_49.9 P180 BE180M4**	**F903_49.9 P180 BX180M4**	529
29.9	5480	1.5	49.1	35800			**F803_49.1 P180 BE180M4**	**F803_49.1 P180 BX180M4**	526
30	5464	0.9	49.0	27400			**F703_49.0 P180 BE180M4**	**F703_49.0 P180 BX180M4**	523
32	5140	2.7	46.1	55000			**F903_46.1 P180 BE180M4**	**F903_46.1 P180 BX180M4**	529
32	5059	1.6	45.3	35700			**F803_45.3 P180 BE180M4**	**F803_45.3 P180 BX180M4**	526
33	5043	1.0	45.2	27200			**F703_45.2 P180 BE180M4**	**F703_45.2 P180 BX180M4**	523
36	4520	3.1	40.5	52300			**F903_40.5 P180 BE180M4**	**F903_40.5 P180 BX180M4**	529
38	4352	1.8	39.0	35000			**F803_39.0 P180 BE180M4**	**F803_39.0 P180 BX180M4**	526
38	4285	1.2	38.4	27000			**F703_38.4 P180 BE180M4**	**F703_38.4 P180 BX180M4**	523
39	4172	3.2	37.4	51400			**F903_37.4 P180 BE180M4**	**F903_37.4 P180 BX180M4**	529
41	4018	2.0	36.0	34400			**F803_36.0 P180 BE180M4**	**F803_36.0 P180 BX180M4**	526
41	3955	1.3	35.4	26700			**F703_35.4 P180 BE180M4**	**F703_35.4 P180 BX180M4**	523
47	3488	2.3	31.3	33400			**F803_31.3 P180 BE180M4**	**F803_31.3 P180 BX180M4**	526
49	3348	1.5	30.0	26500			**F703_30.0 P180 BE180M4**	**F703_30.0 P180 BX180M4**	523
51	3219	2.5	28.8	33000			**F803_28.8 P180 BE180M4**	**F803_28.8 P180 BX180M4**	526
53	3090	1.5	27.7	26000			**F703_27.7 P180 BE180M4**	**F703_27.7 P180 BX180M4**	523
58	2815	2.2	25.2	32100			**F803_25.2 P180 BE180M4**	**F803_25.2 P180 BX180M4**	526
60	2741	1.5	24.6	25500			**F703_24.6 P180 BE180M4**	**F703_24.6 P180 BX180M4**	523
65	2523	1.7	22.6	25200			**F703_22.6 P180 BE180M4**	**F703_22.6 P180 BX180M4**	523
67	2458	2.7	22.0	31300			**F803_22.0 P180 BE180M4**	**F803_22.0 P180 BX180M4**	526
70	2329	1.7	20.9	24900			**F703_20.9 P180 BE180M4**	**F703_20.9 P180 BX180M4**	523
72	2269	2.7	20.3	30600			**F803_20.3 P180 BE180M4**	**F803_20.3 P180 BX180M4**	526
77	2128	0.9	19.1	19200			**F603_19.1 P180 BE180M4**	**F603_19.1 P180 BX180M4**	519
83	1976	2.2	17.7	24200			**F703_17.7 P180 BE180M4**	**F703_17.7 P180 BX180M4**	523
84	1964	3.4	17.6	29700			**F803_17.6 P180 BE180M4**	**F803_17.6 P180 BX180M4**	526
90	1824	2.2	16.3	23800			**F703_16.3 P180 BE180M4**	**F703_16.3 P180 BX180M4**	523
90	1813	3.4	16.2	29100			**F803_16.2 P180 BE180M4**	**F803_16.2 P180 BX180M4**	526
94	1750	1.1	15.7	18700			**F603_15.7 P180 BE180M4**	**F603_15.7 P180 BX180M4**	519
102	1615	1.2	14.5	18600			**F603_14.5 P180 BE180M4**	**F603_14.5 P180 BX180M4**	519
106	1550	2.5	13.9	23000			**F703_13.9 P180 BE180M4**	**F703_13.9 P180 BX180M4**	523
115	1430	2.5	12.8	22600			**F703_12.8 P180 BE180M4**	**F703_12.8 P180 BX180M4**	523
115	1421	1.3	12.7	18300			**F603_12.7 P180 BE180M4**	**F603_12.7 P180 BX180M4**	519
125	1312	1.4	11.8	17900			**F603_11.8 P180 BE180M4**	**F603_11.8 P180 BX180M4**	519
132	1267	1.1	11.1	5800			**F512_11.1 P180 BE180M4**	**F512_11.1 P180 BX180M4**	515
135	1211	2.8	10.9	21800			**F703_10.9 P180 BE180M4**	**F703_10.9 P180 BX180M4**	523
147	1118	2.9	10.0	21400			**F703_10.0 P180 BE180M4**	**F703_10.0 P180 BX180M4**	523
151	1083	1.8	9.7	17300			**F603_9.7 P180 BE180M4**	**F603_9.7 P180 BX180M4**	519
162	1032	1.1	9.1	5630			**F512_9.1 P180 BE180M4**	**F512_9.1 P180 BX180M4**	515
164	1000	1.9	9.0	16900			**F603_9.0 P180 BE180M4**	**F603_9.0 P180 BX180M4**	519
204	820	1.2	7.2	5400			**F512_7.2 P180 BE180M4**	**F512_7.2 P180 BX180M4**	515

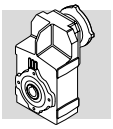

22 kW

n_2 min-1	M_2 Nm	S	i	R_{n2} N			IEC IE2	IEC IE3	
13.1	14888	0.9	111.9	55000			**F903_111.9 P180 BE180L4**	**F903_111.9 P180 BX180L4**	529
14.2	13743	1.0	103.3	55000			**F903_103.3 P180 BE180L4**	**F903_103.3 P180 BX180L4**	529
15.4	12735	1.1	95.8	55000			**F903_95.8 P180 BE180L4**	**F903_95.8 P180 BX180L4**	529
16.6	11755	1.2	88.4	55000			**F903_88.4 P180 BE180L4**	**F903_88.4 P180 BX180L4**	529
19.2	10194	1.4	76.7	55000			**F903_76.7 P180 BE180L4**	**F903_76.7 P180 BX180L4**	529
20.8	9410	1.5	70.8	55000			**F903_70.8 P180 BE180L4**	**F903_70.8 P180 BX180L4**	529
23.7	8259	1.7	62.1	55000			**F903_62.1 P180 BE180L4**	**F903_62.1 P180 BX180L4**	529
23.9	8173	1.0	61.5	35400			**F803_61.5 P180 BE180L4**	**F803_61.5 P180 BX180L4**	526
25.6	7623	1.8	57.3	55000			**F903_57.3 P180 BE180L4**	**F903_57.3 P180 BX180L4**	529
25.9	7545	1.1	56.7	35000			**F803_56.7 P180 BE180L4**	**F803_56.7 P180 BX180L4**	526
29.5	6636	2.1	49.9	54400			**F903_49.9 P180 BE180L4**	**F903_49.9 P180 BX180L4**	529
29.9	6531	1.2	49.1	34100			**F803_49.1 P180 BE180L4**	**F803_49.1 P180 BX180L4**	526
32	6125	2.3	46.1	53500			**F903_46.1 P180 BE180L4**	**F903_46.1 P180 BX180L4**	529
32	6028	1.3	45.3	34300			**F803_45.3 P180 BE180L4**	**F803_45.3 P180 BX180L4**	526
36	5386	2.6	40.5	52300			**F903_40.5 P180 BE180L4**	**F903_40.5 P180 BX180L4**	529
38	5187	1.5	39.0	33300			**F803_39.0 P180 BE180L4**	**F803_39.0 P180 BX180L4**	526
38	5106	1.0	38.4	25400			**F703_38.4 P180 BE180L4**	**F703_38.4 P180 BX180L4**	523
39	4972	2.7	37.4	51400			**F903_37.4 P180 BE180L4**	**F903_37.4 P180 BX180L4**	529
41	4788	1.7	36.0	33200			**F803_36.0 P180 BE180L4**	**F803_36.0 P180 BX180L4**	526
41	4713	1.1	35.4	25300			**F703_35.4 P180 BE180L4**	**F703_35.4 P180 BX180L4**	523
47	4156	1.9	31.3	32600			**F803_31.3 P180 BE180L4**	**F803_31.3 P180 BX180L4**	526
47	4122	3.2	31.0	49500			**F903_31.0 P180 BE180L4**	**F903_31.0 P180 BX180L4**	529
49	3990	1.3	30.0	25100			**F703_30.0 P180 BE180L4**	**F703_30.0 P180 BX180L4**	523
51	3836	2.1	28.8	32000			**F803_28.8 P180 BE180L4**	**F803_28.8 P180 BX180L4**	526
51	3805	3.2	28.6	48600			**F903_28.6 P180 BE180L4**	**F903_28.6 P180 BX180L4**	529
53	3683	1.3	27.7	24800			**F703_27.7 P180 BE180L4**	**F703_27.7 P180 BX180L4**	523
58	3355	1.8	25.2	31300			**F803_25.2 P180 BE180L4**	**F803_25.2 P180 BX180L4**	526
60	3266	1.2	24.6	24500			**F703_24.6 P180 BE180L4**	**F703_24.6 P180 BX180L4**	523
65	3006	1.4	22.6	24300			**F703_22.6 P180 BE180L4**	**F703_22.6 P180 BX180L4**	523
67	2929	2.3	22.0	30200			**F803_22.0 P180 BE180L4**	**F803_22.0 P180 BX180L4**	526
70	2775	1.4	20.9	24000			**F703_20.9 P180 BE180L4**	**F703_20.9 P180 BX180L4**	523
72	2704	2.3	20.3	29900			**F803_20.3 P180 BE180L4**	**F803_20.3 P180 BX180L4**	526
83	2355	1.9	17.7	23400			**F703_17.7 P180 BE180L4**	**F703_17.7 P180 BX180L4**	523
84	2341	2.9	17.6	29100			**F803_17.6 P180 BE180L4**	**F803_17.6 P180 BX180L4**	526
90	2174	1.8	16.3	23100			**F703_16.3 P180 BE180L4**	**F703_16.3 P180 BX180L4**	523
90	2161	2.9	16.2	28500			**F803_16.2 P180 BE180L4**	**F803_16.2 P180 BX180L4**	526
94	2085	0.9	15.7	18200			**F603_15.7 P180 BE180L4**	**F603_15.7 P180 BX180L4**	519
102	1925	1.0	14.5	18000			**F603_14.5 P180 BE180L4**	**F603_14.5 P180 BX180L4**	519
106	1847	2.1	13.9	22400			**F703_13.9 P180 BE180L4**	**F703_13.9 P180 BX180L4**	523
115	1705	2.1	12.8	22100			**F703_12.8 P180 BE180L4**	**F703_12.8 P180 BX180L4**	523
115	1693	1.1	12.7	17700			**F603_12.7 P180 BE180L4**	**F603_12.7 P180 BX180L4**	519
125	1563	1.2	11.8	17400			**F603_11.8 P180 BE180L4**	**F603_11.8 P180 BX180L4**	519
135	1443	2.4	10.9	21400			**F703_10.9 P180 BE180L4**	**F703_10.9 P180 BX180L4**	523
147	1332	2.4	10.0	21000			**F703_10.0 P180 BE180L4**	**F703_10.0 P180 BX180L4**	523
151	1291	1.5	9.7	16900			**F603_9.7 P180 BE180L4**	**F603_9.7 P180 BX180L4**	519
164	1192	1.6	9.0	16500			**F603_9.0 P180 BE180L4**	**F603_9.0 P180 BX180L4**	519
204	977	1.0	7.2	5250			**F512_7.2 P180 BE180L4**	**F512_7.2 P180 BX180L4**	515

30 kW

n_2 min-1	M_2 Nm	S	i	R_{n2} N			IEC IE3	
16.6	16022	0.9	88.4	52200			**F903_88.4 P200 BX200LAK4**	529
19.2	13893	1.0	76.7	52400			**F903_76.7 P200 BX200LAK4**	529
20.8	12825	1.1	70.8	52100			**F903_70.8 P200 BX200LAK4**	529
23.7	11256	1.2	62.1	51800			**F903_62.1 P200 BX200LAK4**	529
25.6	10390	1.3	57.3	51400			**F903_57.3 P200 BX200LAK4**	529
29.5	9044	1.5	49.9	50800			**F903_49.9 P200 BX200LAK4**	529
32	8348	1.7	46.1	50200			**F903_46.1 P200 BX200LAK4**	529
32	8216	1.0	45.3	30900			**F803_45.3 P200 BX200LAK4**	526
36	7341	1.9	40.5	49400			**F903_40.5 P200 BX200LAK4**	529
38	7069	1.1	39.0	31000			**F803_39.0 P200 BX200LAK4**	526

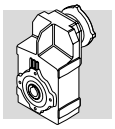

30 kW

n_2 min-1	M_2 Nm	S	i	R_{n2} N			IEC IE3	
39	6776	2.0	37.4	48700			**F903_37.4 P200 BX200LAK4**	529
41	6525	1.2	36.0	30600			**F803_36.0 P200 BX200LAK4**	526
47	5664	1.4	31.3	29900			**F803_31.3 P200 BX200LAK4**	526
47	5618	2.3	31.0	47300			**F903_31.0 P200 BX200LAK4**	529
49	5438	0.9	30.0	22300			**F703_30.0 P200 BX200LAK4**	523
51	5229	1.5	28.8	29500			**F803_28.8 P200 BX200LAK4**	526
51	5186	2.3	28.6	46600			**F903_28.6 P200 BX200LAK4**	529
53	5019	0.9	27.7	22200			**F703_27.7 P200 BX200LAK4**	523
58	4601	2.6	25.4	45500			**F903_25.4 P200 BX200LAK4**	529
58	4572	1.2	25.2	29500			**F803_25.2 P200 BX200LAK4**	526
66	4039	3.0	22.3	44400			**F903_22.3 P200 BX200LAK4**	529
67	3992	1.7	22.0	29000			**F803_22.0 P200 BX200LAK4**	526
71	3728	3.0	20.6	43600			**F903_20.6 P200 BX200LAK4**	529
72	3685	1.7	20.3	28500			**F803_20.3 P200 BX200LAK4**	526
83	3209	1.4	17.7	21800			**F703_17.7 P200 BX200LAK4**	523
84	3190	2.1	17.6	27900			**F803_17.6 P200 BX200LAK4**	526
90	2963	1.4	16.3	21500			**F703_16.3 P200 BX200LAK4**	523
90	2945	2.1	16.2	27400			**F803_16.2 P200 BX200LAK4**	526
105	2534	2.7	14.0	26700			**F803_14.0 P200 BX200LAK4**	526
106	2517	1.5	13.9	21100			**F703_13.9 P200 BX200LAK4**	523
114	2339	2.7	12.9	26200			**F803_12.9 P200 BX200LAK4**	526
115	2323	1.5	12.8	20900			**F703_12.8 P200 BX200LAK4**	523
135	1967	1.8	10.9	20300			**F703_10.9 P200 BX200LAK4**	523
142	1874	3.0	10.3	24900			**F803_10.3 P200 BX200LAK4**	526
147	1815	1.8	10.0	20000			**F703_10.0 P200 BX200LAK4**	523

37 kW

n_2 min-1	M_2 Nm	S	i	R_{n2} N			IEC IE3	
20.9	15710	0.9	70.8	47600			**F903_70.8 P225 BX225SAK4**	529
25.8	12728	1.1	57.3	47700			**F903_57.3 P225 BX225SAK4**	529
29.7	11079	1.3	49.9	47600			**F903_49.9 P225 BX225SAK4**	529
32	10227	1.4	46.1	47200			**F903_46.1 P225 BX225SAK4**	529
37	8993	1.6	40.5	46800			**F903_40.5 P225 BX225SAK4**	529
38	8659	0.9	39.0	28500			**F803_39.0 P225 BX225SAK4**	526
40	8301	1.6	37.4	46300			**F903_37.4 P225 BX225SAK4**	529
41	7993	1.0	36.0	28300			**F803_36.0 P225 BX225SAK4**	526
47	6939	1.2	31.3	28400			**F803_31.3 P225 BX225SAK4**	526
48	6882	1.9	31.0	45300			**F903_31.0 P225 BX225SAK4**	529
51	6405	1.2	28.8	28100			**F803_28.8 P225 BX225SAK4**	526
52	6353	1.9	28.6	44700			**F903_28.6 P225 BX225SAK4**	529
58	5637	2.1	25.4	43900			**F903_25.4 P225 BX225SAK4**	529
59	5601	1.1	25.2	27800			**F803_25.2 P225 BX225SAK4**	526
66	4947	2.4	22.3	43000			**F903_22.3 P225 BX225SAK4**	529
67	4891	1.1	22.0	27600			**F803_22.0 P225 BX225SAK4**	526
72	4567	2.5	20.6	42300			**F903_20.6 P225 BX225SAK4**	529
73	4515	1.1	20.3	27200			**F803_20.3 P225 BX225SAK4**	526
83	3975	2.8	17.9	41200			**F903_17.9 P225 BX225SAK4**	529
84	3908	1.7	17.6	26800			**F803_17.6 P225 BX225SAK4**	526
90	3669	2.8	16.5	40500			**F903_16.5 P225 BX225SAK4**	529
91	3607	1.7	16.2	26300			**F803_16.2 P225 BX225SAK4**	526
102	3226	3.1	14.5	39500			**F903_14.5 P225 BX225SAK4**	529
106	3104	2.2	14.0	25800			**F803_14.0 P225 BX225SAK4**	526
110	2978	3.1	13.4	38700			**F903_13.4 P225 BX225SAK4**	529
115	2865	2.2	12.9	25300			**F803_12.9 P225 BX225SAK4**	526
132	2487	2.4	11.2	24500			**F803_11.2 P225 BX225SAK4**	526
143	2296	2.4	10.3	24300			**F803_10.3 P225 BX225SAK4**	526

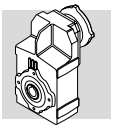

45 kW

n_2 min-1	M_2 Nm	S	i	R_{n2} N			IEC IE3	
32	12438	1.1	46.1	43900			**F903_46.1 P225 BX225SBK4**	529
37	10937	1.3	40.5	43900			**F903_40.5 P225 BX225SBK4**	529
40	10096	1.3	37.4	43600			**F903_37.4 P225 BX225SBK4**	529
47	8439	0.9	31.3	26100			**F803_31.3 P225 BX225SBK4**	526
48	8370	1.6	31.0	43100			**F903_31.0 P225 BX225SBK4**	529
51	7790	1.0	28.8	26000			**F803_28.8 P225 BX225SBK4**	526
52	7726	1.6	28.6	42600			**F903_28.6 P225 BX225SBK4**	529
58	6855	1.8	25.4	42000			**F903_25.4 P225 BX225SBK4**	529
66	6017	2.0	22.3	41400			**F903_22.3 P225 BX225SBK4**	529
67	5948	1.1	22.0	26000			**F803_22.0 P225 BX225SBK4**	526
72	5554	2.0	20.6	40800			**F903_20.6 P225 BX225SBK4**	529
73	5491	1.1	20.3	25700			**F803_20.3 P225 BX225SBK4**	526
83	4834	2.3	17.9	39900			**F903_17.9 P225 BX225SBK4**	529
84	4753	1.4	17.6	25500			**F803_17.6 P225 BX225SBK4**	526
90	4463	2.3	16.5	39300			**F903_16.5 P225 BX225SBK4**	529
91	4387	1.4	16.2	25200			**F803_16.2 P225 BX225SBK4**	526
102	3924	2.5	14.5	38400			**F903_14.5 P225 BX225SBK4**	529
106	3775	1.8	14.0	24800			**F803_14.0 P225 BX225SBK4**	526
110	3622	2.6	13.4	37800			**F903_13.4 P225 BX225SBK4**	529
115	3484	1.8	12.9	24100			**F803_12.9 P225 BX225SBK4**	526
132	3025	1.5	11.2	24000			**F803_11.2 P225 BX225SBK4**	526
133	3003	2.9	11.1	36400			**F903_11.1 P225 BX225SBK4**	529
143	2792	2.0	10.3	23500			**F803_10.3 P225 BX225SBK4**	526

55 kW

n_2 min-1	M_2 Nm	S	i	R_{n2} N			IEC IE3	
32	15202	0.9	46.1	39700			**F903_46.1 P250 BX250MAK4**	529
37	13367	1.0	40.5	40300			**F903_40.5 P250 BX250MAK4**	529
40	12339	1.1	37.4	40200			**F903_37.4 P250 BX250MAK4**	529
48	10230	1.3	31.0	40300			**F903_31.0 P250 BX250MAK4**	529
52	9443	1.3	28.6	40100			**F903_28.6 P250 BX250MAK4**	529
58	8379	1.4	25.4	39700			**F903_25.4 P250 BX250MAK4**	529
66	7354	1.6	22.3	39400			**F903_22.3 P250 BX250MAK4**	529
72	6788	1.7	20.6	38900			**F903_20.6 P250 BX250MAK4**	529
83	5909	1.9	17.9	38300			**F903_17.9 P250 BX250MAK4**	529
90	5454	1.9	16.5	37800			**F903_16.5 P250 BX250MAK4**	529
102	4796	2.1	14.5	37100			**F903_14.5 P250 BX250MAK4**	529
110	4427	2.1	13.4	36600			**F903_13.4 P250 BX250MAK4**	529
133	3671	2.4	11.1	35400			**F903_11.1 P250 BX250MAK4**	529
144	3388	2.4	10.3	34800			**F903_10.3 P250 BX250MAK4**	529

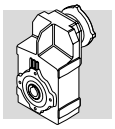

61 GEARBOX RATING CHARTS

F 10 — 140 Nm

	i	n_1 = 2800 min^{-1}					n_1 = 1400 min^{-1}					
		n_2 min^{-1}	M_{n2} Nm	P_{n1} kW	R_{n1} N	R_{n2} N	n_2 min^{-1}	M_{n2} Nm	P_{n1} kW	R_{n1} N	R_{n2} N	
F 10 2_7.4	7.4	378	63	2.6	1000	1290	189	76	1.6	1290	1640	
F 10 2_8.6	8.6	326	67	2.4	980	1350	163	82	1.5	1260	1710	
F 10 2_9.8	9.8	287	73	2.3	980	1410	143	89	1.4	1250	1780	
F 10 2_11.5	11.5	243	78	2.1	950	1480	121	96	1.3	1220	1870	
F 10 2_13.0	13.0	215	85	2.0	940	1530	107	104	1.2	1210	1940	
F 10 2_14.6	14.6	191	94	2.0	1120	1590	96	119	1.3	1300	2000	
F 10 2_17.0	17.0	165	104	1.9	1090	1650	82	128	1.2	1300	2090	
F 10 2_19.3	19.3	145	108	1.7	1100	1730	72	136	1.1	1300	2180	
F 10 2_22.8	22.8	123	119	1.6	1080	1810	61	140	0.95	1300	2310	
F 10 2_25.8	25.8	109	123	1.5	1090	1890	54	140	0.84	1300	2430	
F 10 2_29.6	29.6	94	132	1.4	1060	1970	47	140	0.73	1300	2560	
F 10 2_33.0	33.0	85	137	1.3	1070	2040	42	140	0.65	1300	2670	465
F 10 2_35.3	35.3	79	140	1.2	1060	2090	40	140	0.61	1300	2740	
F 10 2_39.6	39.6	71	140	1.1	1080	2190	35	140	0.54	1300	2800	
F 10 2_44.7	44.7	63	140	0.97	1080	2290	31	140	0.48	1300	2800	
F 10 2_48.7	48.7	57	140	0.89	1090	2370	28.7	140	0.44	1300	2800	
F 10 2_56.7	56.7	49	140	0.76	1100	2520	24.7	140	0.38	1300	2800	
F 10 2_63.0	63.0	44	140	0.69	1110	2620	22.2	140	0.34	1300	2800	
F 10 2_71.1	71.1	39	140	0.61	1000	2750	19.7	140	0.30	1300	2800	
F 10 2_81.3	81.3	34	140	0.53	1110	2800	17.2	140	0.27	1300	2800	
F 10 2_91.5	91.5	31	140	0.47	1110	2800	15.3	140	0.24	1300	2800	
F 10 2_106.0	106.0	26.4	140	0.41	1120	2800	13.2	140	0.20	1300	2800	
F 10 2_127.1	127.1	22.0	140	0.34	1130	2800	11.0	140	0.17	1300	2800	

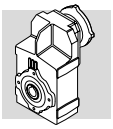

F 10 — 140 Nm

	i	n_1 = 900 min^{-1}					n_1 = 500 min^{-1}					
		n_2 min^{-1}	M_{n2} Nm	P_{n1} kW	R_{n1} N	R_{n2} N	n_2 min^{-1}	M_{n2} Nm	P_{n1} kW	R_{n1} N	R_{n2} N	
F 10 2_7.4	7.4	122	91	1.2	1300	1890	68	111	0.83	1300	2300	
F 10 2_8.6	8.6	105	94	1.1	1300	1970	58	112	0.72	1300	2430	
F 10 2_9.8	9.8	92	107	1.1	1300	2050	51	130	0.73	1300	2490	
F 10 2_11.5	11.5	78	110	0.95	1300	2180	43	131	0.63	1300	2660	
F 10 2_13.0	13.0	69	124	0.94	1300	2240	38	140	0.59	1300	2800	
F 10 2_14.6	14.6	61	138	0.93	1300	2320	34	140	0.53	1300	2800	
F 10 2_17.0	17.0	53	140	0.82	1300	2450	29.5	140	0.46	1300	2800	
F 10 2_19.3	19.3	47	140	0.72	1300	2580	25.9	140	0.40	1300	2800	
F 10 2_22.8	22.8	39	140	0.61	1300	2750	21.9	140	0.34	1300	2800	
F 10 2_25.8	25.8	35	140	0.54	1300	2800	19.4	140	0.30	1300	2800	
F 10 2_29.6	29.6	30	140	0.47	1300	2800	16.9	140	0.26	1300	2800	
F 10 2_33.0	33.0	27.3	140	0.42	1300	2800	15.2	140	0.23	1300	2800	465
F 10 2_35.3	35.3	25.5	140	0.39	1300	2800	14.1	140	0.22	1300	2800	
F 10 2_39.6	39.6	22.7	140	0.35	1300	2800	12.6	140	0.19	1300	2800	
F 10 2_44.7	44.7	20.1	140	0.31	1300	2800	11.2	140	0.17	1300	2800	
F 10 2_48.7	48.7	18.5	140	0.29	1300	2800	10.3	140	0.16	1300	2800	
F 10 2_56.7	56.7	15.9	140	0.24	1300	2800	8.8	140	0.14	1300	2800	
F 10 2_63.0	63.0	14.3	140	0.22	1300	2800	7.9	140	0.12	1300	2800	
F 10 2_71.1	71.1	12.7	140	0.20	1300	2800	7.0	140	0.11	1300	2800	
F 10 2_81.3	81.3	11.1	140	0.17	1300	2800	6.1	140	0.09	1300	2800	
F 10 2_91.5	91.5	9.8	140	0.15	1300	2800	5.5	140	0.08	1300	2800	
F 10 2_106.0	106.0	8.5	140	0.13	1300	2800	4.7	140	0.07	1300	2800	
F 10 2_127.1	127.1	7.1	140	0.11	1300	2800	3.9	140	0.06	1300	2800	

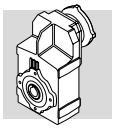

F 20 — 250 Nm

	i	n_1 = 2800 min^{-1}					n_1 = 1400 min^{-1}					
		n_2 min^{-1}	M_{n2} Nm	P_{n1} kW	R_{n1} N	R_{n2} N	n_2 min^{-1}	M_{n2} Nm	P_{n1} kW	R_{n1} N	R_{n2} N	
F 20 2_6.4	6.4	437	103	5.0	—	1370	218	130	3.1	—	1720	
F 20 2_7.8	7.8	357	115	4.5	—	1440	179	144	2.8	—	1820	
F 20 2_8.7	8.7	321	123	4.3	—	1490	160	155	2.7	—	1870	
F 20 2_10.0	10.0	279	131	4.0	—	1550	140	165	2.5	—	1950	
F 20 2_11.2	11.2	249	141	3.9	—	1590	125	177	2.4	—	2010	
F 20 2_14.8	14.8	189	166	3.5	760	1740	95	203	2.1	1010	2210	
F 20 2_18.1	18.1	155	175	3.0	750	1870	77	213	1.8	1020	2380	
F 20 2_20.2	20.2	139	182	2.8	810	1940	69	223	1.7	1070	2460	
F 20 2_23.1	23.1	121	190	2.5	770	2030	60	235	1.6	1000	2570	
F 20 2_25.9	25.9	108	196	2.3	830	2110	54	240	1.4	1100	2680	
F 20 2_30.4	30.4	92	205	2.1	780	2230	46	250	1.3	1050	2840	
F 20 2_33.1	33.1	85	210	2.0	800	2300	42	250	1.2	1120	2940	
F 20 2_37.9	37.9	74	220	1.8	740	2400	37	250	1.0	1130	3110	
F 20 2_41.8	41.8	67	225	1.7	780	2490	33	250	0.92	1220	3240	
F 20 2_44.8	44.8	62	235	1.6	690	2540	31	250	0.86	1200	3330	
F 20 2_50.7	50.7	55	238	1.4	780	2660	27.6	250	0.76	1320	3500	
F 20 2_56.7	56.7	49	250	1.4	730	2750	24.7	250	0.68	1360	3660	
F 20 2_61.9	61.9	45	250	1.2	750	2860	22.6	250	0.62	1370	3790	
F 20 2_69.1	69.1	40	250	1.1	760	2990	20.2	250	0.56	1370	3950	469
F 20 2_76.8	76.8	36	250	1.0	780	3130	18.2	250	0.50	1380	4000	
F 20 2_90.4	90.4	31	250	0.85	830	3340	15.5	250	0.43	1390	4000	
F 20 2_101.6	101.6	27.5	250	0.76	830	3500	13.8	250	0.38	1390	4000	
F 20 2_114.3	114.3	24.5	250	0.67	850	3670	12.2	250	0.34	1400	4000	
F 20 2_132.2	132.2	21.2	250	0.58	870	3890	10.6	250	0.29	1400	4000	
F 20 3_156.3	156.3	17.9	250	0.50	1170	4000	9.0	250	0.25	1300	4000	
F 20 3_172.6	172.6	16.2	250	0.46	1200	4000	8.1	250	0.23	1300	4000	
F 20 3_184.9	184.9	15.1	250	0.43	1210	4000	7.6	250	0.21	1300	4000	
F 20 3_209.3	209.3	13.4	250	0.38	1240	4000	6.7	250	0.19	1300	4000	
F 20 3_234.0	234.0	12.0	250	0.34	1270	4000	6.0	250	0.17	1300	4000	
F 20 3_255.3	255.3	11.0	250	0.31	1280	4000	5.5	250	0.15	1300	4000	
F 20 3_285.2	285.2	9.8	250	0.28	1300	4000	4.9	250	0.14	1300	4000	
F 20 3_316.9	316.9	8.8	250	0.25	1300	4000	4.4	250	0.12	1300	4000	
F 20 3_372.9	372.9	7.5	250	0.21	1300	4000	3.8	250	0.11	1300	4000	
F 20 3_419.3	419.3	6.7	250	0.19	1300	4000	3.3	250	0.09	1300	4000	
F 20 3_471.7	471.7	5.9	250	0.17	1300	4000	3.0	250	0.08	1300	4000	
F 20 3_545.3	545.3	5.1	250	0.14	1300	4000	2.6	250	0.07	1300	4000	

(—) Contact our technical service department advising radial load data (rotation direction, orientation, position)

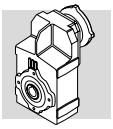

F 20 — 250 Nm

	i	n_1 = 900 min^{-1}					n_1 = 500 min^{-1}					
		n_2 min^{-1}	M_{n2} Nm	P_{n1} kW	R_{n1} N	R_{n2} N	n_2 min^{-1}	M_{n2} Nm	P_{n1} kW	R_{n1} N	R_{n2} N	
F 20 2_6.4	6.4	140	150	2.3	—	1990	218	183	4.4	—	2420	
F 20 2_7.8	7.8	115	167	2.1	—	2110	64	189	1.3	—	2610	
F 20 2_8.7	8.7	103	180	2.0	—	2170	57	219	1.4	—	2640	
F 20 2_10.0	10.0	90	191	1.9	—	2260	50	221	1.2	—	2790	
F 20 2_11.2	11.2	80	205	1.8	—	2330	45	250	1.2	—	2830	
F 20 2_14.8	14.8	61	232	1.6	1210	2570	34	250	0.93	1790	3230	
F 20 2_18.1	18.1	50	250	1.4	1150	2740	27.7	250	0.76	1910	3500	
F 20 2_20.2	20.2	45	250	1.2	1320	2870	24.8	250	0.68	1960	3650	
F 20 2_23.1	23.1	39	250	1.1	1350	3040	21.6	250	0.60	1970	3860	
F 20 2_25.9	25.9	35	250	0.96	1500	3190	19.3	250	0.53	2010	4000	
F 20 2_30.4	30.4	29.6	250	0.82	1530	3400	16.5	250	0.45	2020	4000	
F 20 2_33.1	33.1	27.2	250	0.75	1580	3520	15.1	250	0.42	2040	4000	
F 20 2_37.9	37.9	23.8	250	0.65	1590	3720	13.2	250	0.36	2040	4000	
F 20 2_41.8	41.8	21.5	250	0.59	1610	3870	12.0	250	0.33	2070	4000	
F 20 2_44.8	44.8	20.1	250	0.55	1610	3970	11.2	250	0.31	2060	4000	
F 20 2_50.7	50.7	17.7	250	0.49	1640	4000	9.9	250	0.27	2090	4000	
F 20 2_56.7	56.7	15.9	250	0.44	1650	4000	8.8	250	0.24	2110	4000	
F 20 2_61.9	61.9	14.5	250	0.40	1660	4000	8.1	250	0.22	2110	4000	
F 20 2_69.1	69.1	13.0	250	0.36	1660	4000	7.2	250	0.20	2110	4000	469
F 20 2_76.8	76.8	11.7	250	0.32	1670	4000	6.5	250	0.18	2120	4000	
F 20 2_90.4	90.4	10.0	250	0.27	1680	4000	5.5	250	0.15	2130	4000	
F 20 2_101.6	101.6	8.9	250	0.24	1680	4000	4.9	250	0.14	2130	4000	
F 20 2_114.3	114.3	7.9	250	0.22	1690	4000	4.4	250	0.12	2140	4000	
F 20 2_132.2	132.2	6.8	250	0.19	1690	4000	3.8	250	0.10	2150	4000	
F 20 3_156.3	156.3	5.8	250	0.16	1300	4000	3.2	250	0.09	1300	4000	
F 20 3_172.6	172.6	5.2	250	0.15	1300	4000	2.9	250	0.08	1300	4000	
F 20 3_184.9	184.9	4.9	250	0.14	1300	4000	2.7	250	0.08	1300	4000	
F 20 3_209.3	209.3	4.3	250	0.12	1300	4000	2.4	250	0.07	1300	4000	
F 20 3_234.0	234.0	3.8	250	0.11	1300	4000	2.1	250	0.06	1300	4000	
F 20 3_255.3	255.3	3.5	250	0.10	1300	4000	2.0	250	0.06	1300	4000	
F 20 3_285.2	285.2	3.2	250	0.09	1300	4000	1.8	250	0.05	1300	4000	
F 20 3_316.9	316.9	2.8	250	0.08	1300	4000	1.6	250	0.04	1300	4000	
F 20 3_372.9	372.9	2.4	250	0.07	1300	4000	1.3	250	0.04	1300	4000	
F 20 3_419.3	419.3	2.1	250	0.06	1300	4000	1.2	250	0.03	1300	4000	
F 20 3_471.7	471.7	1.9	250	0.05	1300	4000	1.1	250	0.03	1300	4000	
F 20 3_545.3	545.3	1.7	250	0.05	1300	4000	0.92	250	0.03	1300	4000	

(—) Contact our technical service department advising radial load data (rotation direction, orientation, position)

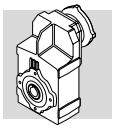

F 25 — 400 Nm

	i	n_1 = 2800 min^{-1}					n_1 = 1400 min^{-1}					
		n_2 min^{-1}	M_{n2} Nm	P_{n1} kW	R_{n1} N	R_{n2} N	n_2 min^{-1}	M_{n2} Nm	P_{n1} kW	R_{n1} N	R_{n2} N	
F 25 2_6.9	6.9	408	155	7.0	—	1840	204	195	4.4	—	2320	
F 25 2_8.4	8.4	334	170	6.3	—	1950	167	215	4.0	—	2450	
F 25 2_9.4	9.4	299	180	5.9	—	2010	150	225	3.7	—	2540	
F 25 2_10.6	10.6	264	240	7.0	—	1850	132	305	4.4	—	2320	
F 25 2_13.0	13.0	216	255	6.1	—	1990	108	320	3.8	—	2510	
F 25 2_14.5	14.5	194	260	5.5	—	2080	97	330	3.5	—	2610	
F 25 2_16.6	16.6	168	270	5.0	—	2190	84	340	3.2	—	2760	
F 25 2_18.6	18.6	150	280	4.6	—	2270	75	350	2.9	—	2870	
F 25 2_21.8	21.8	128	280	4.0	—	2460	64	355	2.5	250	3090	
F 25 2_23.8	23.8	118	285	3.7	250	2540	59	360	2.3	300	3200	
F 25 2_27.2	27.2	103	290	3.3	250	2690	51	365	2.1	320	3400	
F 25 2_30.0	30.0	93	295	3.0	310	2800	47	370	1.9	410	3540	
F 25 2_32.2	32.2	87	295	2.8	310	2900	44	370	1.8	410	3660	
F 25 2_36.4	36.4	77	295	2.5	460	3070	38	370	1.6	600	3880	
F 25 2_40.7	40.7	69	295	2.2	560	3230	34	370	1.4	720	4080	
F 25 2_44.4	44.4	63	295	2.0	720	3360	32	370	1.3	720	4250	
F 25 3_45.6	45.6	61	340	2.4	1440	3100	31	400	1.4	1830	4030	
F 25 3_50.8	50.8	55	350	2.2	1450	3230	27.6	400	1.2	1850	4250	
F 25 3_58.3	58.3	48	365	2.0	1450	3390	24.0	400	1.1	1860	4530	
F 25 3_65.3	65.3	43	375	1.8	1450	3530	21.4	400	0.97	1870	4780	
F 25 3_76.6	76.6	37	395	1.6	1450	3730	18.3	400	0.82	1880	5140	
F 25 3_83.4	83.4	34	400	1.5	1450	3860	16.8	400	0.76	1880	5330	
F 25 3_95.5	95.5	29.3	400	1.3	1460	4130	14.7	400	0.66	1890	5660	473
F 25 3_105.4	105.4	26.6	400	1.2	1470	4320	13.3	400	0.60	1890	5910	
F 25 3_113.0	113.0	24.8	400	1.1	1470	4470	12.4	400	0.56	1890	6090	
F 25 3_127.8	127.8	21.9	400	0.99	1480	4730	11.0	400	0.49	1900	6430	
F 25 3_143.0	143.0	19.6	400	0.88	1480	4980	9.8	400	0.44	1910	6500	
F 25 3_155.9	155.9	18.0	400	0.81	1480	5180	9.0	400	0.40	1910	6500	
F 25 3_174.2	174.2	16.1	400	0.72	1490	5440	8.0	400	0.36	1910	6500	
F 25 3_193.6	193.6	14.5	400	0.65	1490	5700	7.2	400	0.33	1910	6500	
F 25 3_227.8	227.8	12.3	400	0.55	1490	6120	6.1	400	0.28	1920	6500	
F 25 3_256.1	256.1	10.9	400	0.49	1490	6430	5.5	400	0.25	1920	6500	
F 25 3_288.1	288.1	9.7	400	0.44	1490	6500	4.9	400	0.22	1920	6500	
F 25 3_333.1	333.1	8.4	400	0.38	1500	6500	4.2	400	0.19	1930	6500	
F 25 4_393.9	393.9	7.1	400	0.33	1270	6500	3.6	400	0.17	1300	6500	
F 25 4_434.9	434.9	6.4	400	0.30	1290	6500	3.2	400	0.15	1300	6500	
F 25 4_466.0	466.0	6.0	400	0.28	1300	6500	3.0	400	0.14	1300	6500	
F 25 4_527.3	527.3	5.3	400	0.25	1300	6500	2.7	400	0.12	1300	6500	
F 25 4_589.7	589.7	4.7	400	0.22	1300	6500	2.4	400	0.11	1300	6500	
F 25 4_643.3	643.3	4.4	400	0.20	1300	6500	2.2	400	0.10	1300	6500	
F 25 4_718.7	718.7	3.9	400	0.18	1300	6500	1.9	400	0.09	1300	6500	
F 25 4_798.5	798.5	3.5	400	0.16	1300	6500	1.8	400	0.08	1300	6500	
F 25 4_939.8	939.8	3.0	400	0.14	1300	6500	1.5	400	0.07	1300	6500	
F 25 4_1057	1057	2.7	400	0.12	1300	6500	1.3	400	0.06	1300	6500	
F 25 4_1189	1189	2.4	400	0.11	1300	6500	1.2	400	0.05	1300	6500	
F 25 4_1374	1374	2.0	400	0.09	1300	6500	1.0	400	0.05	1300	6500	

(—) Contact our technical service department advising radial load data (rotation direction, orientation, position)

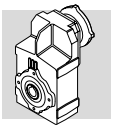

F 25 — 400 Nm

	i	n_1 = 900 min^{-1}					n_1 = 500 min^{-1}					
		n_2 min^{-1}	M_{n2} Nm	P_{n1} kW	R_{n1} N	R_{n2} N	n_2 min^{-1}	M_{n2} Nm	P_{n1} kW	R_{n1} N	R_{n2} N	
F 25 2_6.9	6.9	131	225	3.2	—	2690	73	255	2.0	370	3350	
F 25 2_8.4	8.4	107	250	3.0	—	2840	60	260	1.7	590	3630	
F 25 2_9.4	9.4	96	260	2.8	—	2940	53	265	1.6	820	3780	
F 25 2_10.6	10.6	85	355	3.3	—	2680	47	395	2.0	360	3420	
F 25 2_13.0	13.0	69	370	2.8	—	2910	39	400	1.7	620	3750	
F 25 2_14.5	14.5	62	380	2.6	—	3030	35	400	1.5	940	3950	
F 25 2_16.6	16.6	54	395	2.4	—	3190	30	400	1.3	1070	4210	
F 25 2_18.6	18.6	48	400	2.1	300	3350	26.9	400	1.2	1330	4440	
F 25 2_21.8	21.8	41	400	1.8	420	3630	22.9	400	1.0	1450	4770	
F 25 2_23.8	23.8	38	400	1.7	530	3780	21.0	400	0.93	1560	4950	
F 25 2_27.2	27.2	33	400	1.5	610	4030	18.4	400	0.81	1640	5260	
F 25 2_30.0	30.0	30	400	1.3	760	4220	16.6	400	0.73	1790	5490	
F 25 2_32.2	32.2	28.0	400	1.2	760	4360	15.5	400	0.69	1790	5660	
F 25 2_36.4	36.4	24.7	400	1.1	970	4610	13.7	400	0.61	2000	5970	
F 25 2_40.7	40.7	22.1	375	0.91	1330	4950	12.3	375	0.51	2000	6360	
F 25 2_44.4	44.4	20.3	385	0.86	1230	5100	11.3	385	0.48	2000	6500	
F 25 3_45.6	45.6	19.8	400	0.89	2160	4960	11.0	400	0.49	2200	6420	
F 25 3_50.8	50.8	17.7	400	0.80	2180	5210	9.8	400	0.44	2200	6500	
F 25 3_58.3	58.3	15.4	400	0.69	2190	5540	8.6	400	0.39	2200	6500	
F 25 3_65.3	65.3	13.8	400	0.62	2200	5820	7.7	400	0.34	2200	6500	
F 25 3_76.6	76.6	11.8	400	0.53	2200	6240	6.5	400	0.29	2200	6500	
F 25 3_83.4	83.4	10.8	400	0.49	2200	6470	6.0	400	0.27	2200	6500	
F 25 3_95.5	95.5	9.4	400	0.42	2200	6500	5.2	400	0.24	2200	6500	473
F 25 3_105.4	105.4	8.5	400	0.38	2200	6500	4.7	400	0.21	2200	6500	
F 25 3_113.0	113.0	8.0	400	0.36	2200	6500	4.4	400	0.20	2200	6500	
F 25 3_127.8	127.8	7.0	400	0.32	2200	6500	3.9	400	0.18	2200	6500	
F 25 3_143.0	143.0	6.3	400	0.28	2200	6500	3.5	400	0.16	2200	6500	
F 25 3_155.9	155.9	5.8	400	0.26	2200	6500	3.2	400	0.14	2200	6500	
F 25 3_174.2	174.2	5.2	400	0.23	2200	6500	2.9	400	0.13	2200	6500	
F 25 3_193.6	193.6	4.6	400	0.21	2200	6500	2.6	400	0.12	2200	6500	
F 25 3_227.8	227.8	4.0	400	0.18	2200	6500	2.2	400	0.10	2200	6500	
F 25 3_256.1	256.1	3.5	400	0.16	2200	6500	2.0	400	0.09	2200	6500	
F 25 3_288.1	288.1	3.1	400	0.14	2200	6500	1.7	400	0.08	2200	6500	
F 25 3_333.1	333.1	2.7	400	0.12	2200	6500	1.5	400	0.07	2200	6500	
F 25 4_393.9	393.9	2.3	400	0.11	1300	6500	1.3	400	0.06	1300	6500	
F 25 4_434.9	434.9	2.1	400	0.10	1300	6500	1.1	400	0.05	1300	6500	
F 25 4_466.0	466.0	1.9	400	0.09	1300	6500	1.1	400	0.05	1300	6500	
F 25 4_527.3	527.3	1.7	400	0.08	1300	6500	0.95	400	0.04	1300	6500	
F 25 4_589.7	589.7	1.5	400	0.07	1300	6500	0.85	400	0.04	1300	6500	
F 25 4_643.3	643.3	1.4	400	0.07	1300	6500	0.78	400	0.04	1300	6500	
F 25 4_718.7	718.7	1.3	400	0.06	1300	6500	0.70	400	0.03	1300	6500	
F 25 4_798.5	798.5	1.1	400	0.05	1300	6500	0.63	400	0.03	1300	6500	
F 25 4_939.8	939.8	0.96	400	0.04	1300	6500	0.53	400	0.02	1300	6500	
F 25 4_1057	1057	0.85	400	0.04	1300	6500	0.47	400	0.02	1300	6500	
F 25 4_1189	1189	0.76	400	0.04	1300	6500	0.42	400	0.02	1300	6500	
F 25 4_1374	1374	0.65	400	0.03	1300	6500	0.36	400	0.02	1300	6500	

(—) Contact our technical service department advising radial load data (rotation direction, orientation, position)

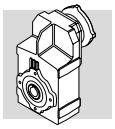

F 31 — 600 Nm

	i	n_1 = 2800 min^{-1}					n_1 = 1400 min^{-1}					
		n_2 min^{-1}	M_{n2} Nm	P_{n1} kW	R_{n1} N	R_{n2} N	n_2 min^{-1}	M_{n2} Nm	P_{n1} kW	R_{n1} N	R_{n2} N	
F 31 2_6.9	6.9	403	295	13.1	—	2710	201	360	8.0	—	3460	
F 31 2_8.2	8.2	340	310	11.6	—	2880	170	375	7.0	—	3690	
F 31 2_9.0	9.0	311	310	10.6	—	3000	155	385	6.6	390	3810	
F 31 2_10.7	10.7	261	450	12.9	—	2790	130	525	7.5	500	3670	
F 31 2_12.7	12.7	220	475	11.5	—	2950	110	555	6.7	490	3880	
F 31 2_13.9	13.9	201	475	10.5	290	3100	100	570	6.3	650	4010	
F 31 2_16.8	16.8	167	475	8.7	510	3410	83	595	5.5	680	4310	
F 31 2_18.5	18.5	151	475	7.9	730	3580	76	600	5.0	910	4510	
F 31 2_21.1	21.1	133	475	6.9	830	3830	66	600	4.4	1030	4820	
F 31 2_23.4	23.4	120	475	6.3	1020	4020	60	600	4.0	1270	5060	
F 31 2_27.3	27.3	103	475	5.4	1100	4330	51	600	3.4	1380	5450	
F 31 2_30.1	30.1	93	475	4.9	1270	4540	46	600	3.1	1590	5710	
F 31 2_34.4	34.4	81	475	4.3	1330	4820	41	600	2.7	1660	6070	
F 31 2_37.7	37.7	74	475	3.9	1430	5030	37	600	2.5	1800	6330	
F 31 2_40.4	40.4	69	475	3.6	1440	5190	35	600	2.3	1800	6500	
F 31 2_44.6	44.6	63	475	3.3	1540	5430	31	600	2.1	1930	6500	
F 31 3_47.5	47.5	59	475	3.1	2110	5490	29.4	580	1.9	2200	6500	
F 31 3_52.1	52.1	54	485	2.9	2120	5680	26.9	600	1.8	2200	6500	
F 31 3_62.8	62.8	45	515	2.6	2120	6040	22.3	600	1.5	2200	6500	
F 31 3_69.1	69.1	41	530	2.4	2130	6250	20.3	600	1.4	2200	6500	
F 31 3_78.9	78.9	36	550	2.2	2120	6500	17.8	600	1.2	2200	6500	
F 31 3_87.4	87.4	32	570	2.1	2130	6500	16.0	600	1.1	2200	6500	
F 31 3_101.9	101.9	27.5	595	1.8	2130	6500	13.7	600	0.93	2200	6500	
F 31 3_112.5	112.5	24.9	600	1.7	2130	6500	12.4	600	0.84	2200	6500	477
F 31 3_128.4	128.4	21.8	600	1.5	2140	6500	10.9	600	0.74	2200	6500	
F 31 3_140.7	140.7	19.9	600	1.3	2140	6500	9.9	600	0.67	2200	6500	
F 31 3_150.8	150.8	18.6	600	1.3	2140	6500	9.3	600	0.63	2200	6500	
F 31 3_166.8	166.8	16.8	600	1.1	2150	6500	8.4	600	0.57	2200	6500	
F 31 3_185.4	185.4	15.1	600	1.0	2160	6500	7.5	600	0.51	2200	6500	
F 31 3_202.3	202.3	13.8	600	0.94	2160	6500	6.9	600	0.47	2200	6500	
F 31 3_228.2	228.2	12.3	600	0.83	2160	6500	6.1	600	0.41	2200	6500	
F 31 3_253.6	253.6	11.0	600	0.75	2160	6500	5.5	600	0.37	2200	6500	
F 31 3_293.8	293.8	9.5	600	0.64	2170	6500	4.8	600	0.32	2200	6500	
F 31 3_332.8	332.8	8.4	600	0.57	2170	6500	4.2	600	0.28	2200	6500	
F 31 3_374.4	374.4	7.5	600	0.51	2170	6500	3.7	600	0.25	2200	6500	
F 31 4_418.9	418.9	6.7	600	0.47	1230	6500	3.3	600	0.23	1300	6500	
F 31 4_462.6	462.6	6.1	600	0.42	1250	6500	3.0	600	0.21	1300	6500	
F 31 4_527.8	527.8	5.3	600	0.37	1270	6500	2.7	600	0.19	1300	6500	
F 31 4_578.6	578.6	4.8	600	0.34	1290	6500	2.4	600	0.17	1300	6500	
F 31 4_619.9	619.9	4.5	600	0.32	1300	6500	2.3	600	0.16	1300	6500	
F 31 4_685.6	685.6	4.1	600	0.29	1300	6500	2.0	600	0.14	1300	6500	
F 31 4_762.3	762.3	3.7	600	0.26	1300	6500	1.8	600	0.13	1300	6500	
F 31 4_831.6	831.6	3.4	600	0.24	1300	6500	1.7	600	0.12	1300	6500	
F 31 4_938.2	938.2	3.0	600	0.21	1300	6500	1.5	600	0.10	1300	6500	
F 31 4_1042	1042	2.7	600	0.19	1300	6500	1.3	600	0.09	1300	6500	
F 31 4_1208	1208	2.3	600	0.16	1300	6500	1.2	600	0.08	1300	6500	
F 31 4_1368	1368	2.0	600	0.14	1300	6500	1.0	600	0.07	1300	6500	
F 31 4_1539	1539	1.8	600	0.13	1300	6500	0.91	600	0.06	1300	6500	

(—) Contact our technical service department advising radial load data (rotation direction, orientation, position)

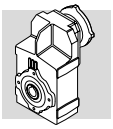

F 31 — 600 Nm

	i	n_1 = 900 min^{-1}					n_1 = 500 min^{-1}					
		n_2 min^{-1}	M_{n2} Nm	P_{n1} kW	R_{n1} N	R_{n2} N	n_2 min^{-1}	M_{n2} Nm	P_{n1} kW	R_{n1} N	R_{n2} N	
F 31 2_6.9	6.9	130	390	5.6	640	4120	72	390	3.1	2200	5350	
F 31 2_8.2	8.2	109	390	4.7	990	4450	61	390	2.6	2200	5760	
F 31 2_9.0	9.0	100	390	4.3	1320	4640	55	390	2.4	2200	5980	
F 31 2_10.7	10.7	84	600	5.5	670	4280	47	600	3.1	2200	5710	
F 31 2_12.7	12.7	71	600	4.7	1020	4670	39	600	2.6	2200	6170	
F 31 2_13.9	13.9	65	600	4.3	1350	4880	36	600	2.4	2200	6440	
F 31 2_16.8	16.8	54	600	3.5	1640	5340	29.8	600	2.0	2200	6500	
F 31 2_18.5	18.5	49	600	3.2	1915	5580	27.0	600	1.8	2200	6500	
F 31 2_21.1	21.1	43	600	2.8	2040	5950	23.7	600	1.6	2200	6500	
F 31 2_23.4	23.4	38	600	2.5	2200	6230	21.4	600	1.4	2200	6500	
F 31 2_27.3	27.3	33	600	2.2	2200	6500	18.3	600	1.2	2200	6500	
F 31 2_30.1	30.1	29.9	600	2.0	2200	6500	16.6	600	1.1	2200	6500	
F 31 2_34.4	34.4	26.2	600	1.7	2200	6500	14.6	600	0.96	2200	6500	
F 31 2_37.7	37.7	23.9	600	1.6	2200	6500	13.3	600	0.88	2200	6500	
F 31 2_40.4	40.4	22.3	600	1.5	2200	6500	12.4	600	0.82	2200	6500	
F 31 2_44.6	44.6	20.2	600	1.3	2200	6500	11.2	600	0.74	2200	6500	
F 31 3_47.5	47.5	18.9	600	1.3	2200	6500	10.5	600	0.71	2200	6500	
F 31 3_52.1	52.1	17.3	600	1.2	2200	6500	9.6	600	0.65	2200	6500	
F 31 3_62.8	62.8	14.3	600	0.97	2200	6500	8.0	600	0.54	2200	6500	
F 31 3_69.1	69.1	13.0	600	0.88	2200	6500	7.2	600	0.49	2200	6500	
F 31 3_78.9	78.9	11.4	600	0.77	2200	6500	6.3	600	0.43	2200	6500	
F 31 3_87.4	87.4	10.3	600	0.70	2200	6500	5.7	600	0.39	2200	6500	
F 31 3_101.9	101.9	8.8	600	0.60	2200	6500	4.9	600	0.33	2200	6500	
F 31 3_112.5	112.5	8.0	600	0.54	2200	6500	4.4	600	0.30	2200	6500	477
F 31 3_128.4	128.4	7.0	600	0.47	2200	6500	3.9	600	0.26	2200	6500	
F 31 3_140.7	140.7	6.4	600	0.43	2200	6500	3.6	600	0.24	2200	6500	
F 31 3_150.8	150.8	6.0	600	0.40	2200	6500	3.3	600	0.22	2200	6500	
F 31 3_166.8	166.8	5.4	600	0.36	2200	6500	3.0	600	0.20	2200	6500	
F 31 3_185.4	185.4	4.9	600	0.33	2200	6500	2.7	600	0.18	2200	6500	
F 31 3_202.3	202.3	4.4	600	0.30	2200	6500	2.5	600	0.17	2200	6500	
F 31 3_228.2	228.2	3.9	600	0.27	2200	6500	2.2	600	0.15	2200	6500	
F 31 3_253.6	253.6	3.5	600	0.24	2200	6500	2.0	600	0.13	2200	6500	
F 31 3_293.8	293.8	3.1	600	0.21	2200	6500	1.7	600	0.11	2200	6500	
F 31 3_332.8	332.8	2.7	600	0.18	2200	6500	1.5	600	0.10	2200	6500	
F 31 3_374.4	374.4	2.4	600	0.16	2200	6500	1.3	600	0.09	2200	6500	
F 31 4_418.9	418.9	2.1	600	0.15	1300	6500	1.2	600	0.08	1300	6500	
F 31 4_462.6	462.6	1.9	600	0.14	1300	6500	1.1	600	0.08	1300	6500	
F 31 4_527.8	527.8	1.7	600	0.12	1300	6500	0.95	600	0.07	1300	6500	
F 31 4_578.6	578.6	1.6	600	0.11	1300	6500	0.86	600	0.06	1300	6500	
F 31 4_619.9	619.9	1.5	600	0.10	1300	6500	0.81	600	0.06	1300	6500	
F 31 4_685.6	685.6	1.3	600	0.09	1300	6500	0.73	600	0.05	1300	6500	
F 31 4_762.3	762.3	1.2	600	0.08	1300	6500	0.66	600	0.05	1300	6500	
F 31 4_831.6	831.6	1.1	600	0.08	1300	6500	0.60	600	0.04	1300	6500	
F 31 4_938.2	938.2	0.96	600	0.07	1300	6500	0.53	600	0.04	1300	6500	
F 31 4_1042	1042	0.86	600	0.06	1300	6500	0.48	600	0.03	1300	6500	
F 31 4_1208	1208	0.75	600	0.05	1300	6500	0.41	600	0.03	1300	6500	
F 31 4_1368	1368	0.66	600	0.05	1300	6500	0.37	600	0.03	1300	6500	
F 31 4_1539	1539	0.58	600	0.04	1300	6500	0.32	600	0.02	1300	6500	

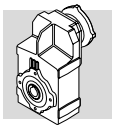

F 41 — 1100 Nm

	i	n_1 = 2800 min^{-1}					n_1 = 1400 min^{-1}					
		n_2 min^{-1}	M_{n2} Nm	P_{n1} kW	R_{n1} N	R_{n2} N	n_2 min^{-1}	M_{n2} Nm	P_{n1} kW	R_{n1} N	R_{n2} N	
F 41 2_6.7	6.7	416	460	21	—	3410	208	580	13.3	—	4290	
F 41 2_9.1	9.1	306	515	17.4	—	3750	153	650	11.0	—	4730	
F 41 2_10.8	10.8	260	715	21	—	3310	130	900	12.9	—	4170	
F 41 2_14.6	14.6	191	805	17.0	—	3620	96	1015	10.7	—	4560	
F 41 2_17.1	17.1	164	835	15.1	—	3860	82	1055	9.5	—	4850	
F 41 2_18.9	18.9	148	860	14.0	410	4000	74	1085	8.9	500	5030	
F 41 2_24.1	24.1	116	875	11.2	650	4540	58	1100	7.0	840	5730	
F 41 2_30.1	30.1	93	875	9.0	980	5130	46	1100	5.6	1260	6470	
F 41 2_38.2	38.2	73	875	7.1	1260	5810	37	1100	4.4	1600	7330	
F 41 2_47.9	47.9	58	850	5.5	1680	6600	29.2	1070	3.4	2120	8320	
F 41 3_51.5	51.5	54	880	5.4	3030	6750	27.2	1085	3.3	3500	8500	
F 41 3_60.2	60.2	46	930	4.9	3030	7100	23.2	1100	2.9	3500	8500	
F 41 3_66.5	66.5	42	980	4.6	3030	7280	21.1	1100	2.6	3500	8500	
F 41 3_84.9	84.9	33	1065	4.0	3030	7890	16.5	1100	2.0	3500	8500	
F 41 3_106.0	106.0	26.4	1100	3.3	3040	8500	13.2	1100	1.6	3500	8500	
F 41 3_134.4	134.4	20.8	1100	2.6	3050	8500	10.4	1100	1.3	3500	8500	
F 41 3_168.7	168.7	16.6	1100	2.1	3070	8500	8.3	1100	1.0	3500	8500	
F 41 3_180.7	180.7	15.5	1100	1.9	3070	8500	7.7	1100	0.96	3500	8500	481
F 41 3_198.9	198.9	14.1	1100	1.7	3080	8500	7.0	1100	0.87	3500	8500	
F 41 3_220.1	220.1	12.7	1100	1.6	3090	8500	6.4	1100	0.79	3500	8500	
F 41 3_240.1	240.1	11.7	1100	1.4	3090	8500	5.8	1100	0.72	3500	8500	
F 41 3_266.9	266.9	10.5	1100	1.3	3090	8500	5.2	1100	0.65	3500	8500	
F 41 3_296.6	296.6	9.4	1100	1.2	3090	8500	4.7	1100	0.58	3500	8500	
F 41 3_344.8	344.8	8.1	1100	1.0	3100	8500	4.1	1100	0.50	3500	8500	
F 41 4_433.7	433.7	6.5	1100	0.83	1480	8500	3.2	1100	0.41	1910	8500	
F 41 4_549.8	549.8	5.1	1100	0.65	1520	8500	2.5	1100	0.33	1940	8500	
F 41 4_690.1	690.1	4.1	1100	0.52	1540	8500	2.0	1100	0.26	1970	8500	
F 41 4_739.4	739.4	3.8	1100	0.48	1550	8500	1.9	1100	0.24	1980	8500	
F 41 4_813.8	813.8	3.4	1100	0.44	1560	8500	1.7	1100	0.22	1990	8500	
F 41 4_900.5	900.5	3.1	1100	0.40	1570	8500	1.6	1100	0.20	2000	8500	
F 41 4_982.4	982.4	2.9	1100	0.36	1570	8500	1.4	1100	0.18	2000	8500	
F 41 4_1092	1092	2.6	1100	0.33	1580	8500	1.3	1100	0.16	2010	8500	
F 41 4_1213	1213	2.3	1100	0.30	1590	8500	1.2	1100	0.15	2020	8500	
F 41 4_1411	1411	2.0	1100	0.25	1600	8500	1.0	1100	0.13	2020	8500	

(—) Contact our technical service department advising radial load data (rotation direction, orientation, position)

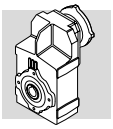

F 41 — 1100 Nm

	i	n_1 = 900 min^{-1}					n_1 = 500 min^{-1}					
		n_2 min^{-1}	M_{n2} Nm	P_{n1} kW	R_{n1} N	R_{n2} N	n_2 min^{-1}	M_{n2} Nm	P_{n1} kW	R_{n1} N	R_{n2} N	
F 41 2_6.7	6.7	134	670	9.9	—	4980	74	700	5.7	1760	6450	
F 41 2_9.1	9.1	99	700	7.6	680	5660	55	700	4.2	2850	7410	
F 41 2_10.8	10.8	84	1025	9.4	480	4900	46	1100	5.6	1950	6480	
F 41 2_14.6	14.6	62	1100	7.5	860	5550	34	1100	4.1	3030	7590	
F 41 2_17.1	17.1	53	1100	6.4	1230	6060	29.2	1100	3.5	3400	8210	
F 41 2_18.9	18.9	48	1100	5.8	1760	6390	26.5	1100	3.2	3500	8500	
F 41 2_24.1	24.1	37	1100	4.5	2210	7260	20.7	1100	2.5	3500	8500	
F 41 2_30.1	30.1	29.9	1100	3.6	2630	8120	16.6	1100	2.0	3500	8500	
F 41 2_38.2	38.2	23.6	1100	2.9	2970	8500	13.1	1100	1.6	3500	8500	
F 41 2_47.9	47.9	18.8	1070	2.2	3490	8500	10.4	1070	1.2	3500	8500	
F 41 3_51.5	51.5	17.5	1100	2.2	3500	8500	9.7	1100	1.2	3500	8500	
F 41 3_60.2	60.2	14.9	1100	1.9	3500	8500	8.3	1100	1.0	3500	8500	
F 41 3_66.5	66.5	13.5	1100	1.7	3500	8500	7.5	1100	0.93	3500	8500	
F 41 3_84.9	84.9	10.6	1100	1.3	3500	8500	5.9	1100	0.73	3500	8500	
F 41 3_106.0	106.0	8.5	1100	1.1	3500	8500	4.7	1100	0.58	3500	8500	
F 41 3_134.4	134.4	6.7	1100	0.83	3500	8500	3.7	1100	0.46	3500	8500	
F 41 3_168.7	168.7	5.3	1100	0.66	3500	8500	3.0	1100	0.37	3500	8500	
F 41 3_180.7	180.7	5.0	1100	0.62	3500	8500	2.8	1100	0.34	3500	8500	481
F 41 3_198.9	198.9	4.5	1100	0.56	3500	8500	2.5	1100	0.31	3500	8500	
F 41 3_220.1	220.1	4.1	1100	0.51	3500	8500	2.3	1100	0.28	3500	8500	
F 41 3_240.1	240.1	3.7	1100	0.46	3500	8500	2.1	1100	0.26	3500	8500	
F 41 3_266.9	266.9	3.4	1100	0.42	3500	8500	1.9	1100	0.23	3500	8500	
F 41 3_296.6	296.6	3.0	1100	0.38	3500	8500	1.7	1100	0.21	3500	8500	
F 41 3_344.8	344.8	2.6	1100	0.32	3500	8500	1.5	1100	0.18	3500	8500	
F 41 4_433.7	433.7	2.1	1100	0.27	2200	8500	1.2	1100	0.15	2200	8500	
F 41 4_549.8	549.8	1.6	1100	0.21	2200	8500	0.91	1100	0.12	2200	8500	
F 41 4_690.1	690.1	1.3	1100	0.17	2200	8500	0.72	1100	0.09	2200	8500	
F 41 4_739.4	739.4	1.2	1100	0.16	2200	8500	0.68	1100	0.09	2200	8500	
F 41 4_813.8	813.8	1.1	1100	0.14	2200	8500	0.61	1100	0.08	2200	8500	
F 41 4_900.5	900.5	1.0	1100	0.13	2200	8500	0.56	1100	0.07	2200	8500	
F 41 4_982.4	982.4	0.92	1100	0.12	2200	8500	0.51	1100	0.07	2200	8500	
F 41 4_1092	1092	0.82	1100	0.11	2200	8500	0.46	1100	0.06	2200	8500	
F 41 4_1213	1213	0.74	1100	0.09	2200	8500	0.41	1100	0.05	2200	8500	
F 41 4_1411	1411	0.64	1100	0.08	2200	8500	0.35	1100	0.05	2200	8500	

(—) Contact our technical service department advising radial load data (rotation direction, orientation, position)

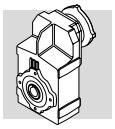

F 51 — 1800 Nm

	i	n_1 = 2800 min^{-1}					n_1 = 1400 min^{-1}					
		n_2 min^{-1}	M_{n2} Nm	P_{n1} kW	R_{n1} N	R_{n2} N	n_2 min^{-1}	M_{n2} Nm	P_{n1} kW	R_{n1} N	R_{n2} N	
F 51 2_7.2	7.2	389	775	33	990	4170	195	975	21	1440	5260	
F 51 2_9.1	9.1	309	875	30	890	4400	155	1100	18.8	1320	5550	
F 51 2_11.1	11.1	252	1055	29	1460	4530	126	1330	18.5	2010	5700	
F 51 2_14.0	14.0	200	1125	25	1580	4920	100	1420	15.7	2150	6200	
F 51 2_18.8	18.8	149	1225	20	1660	5480	74	1545	12.7	2240	6900	
F 51 2_23.8	23.8	118	1310	17.0	1710	5960	59	1650	10.7	2290	7520	
F 51 2_30.0	30.0	93	1350	13.9	1760	6610	47	1700	8.7	2330	8340	
F 51 2_37.1	37.1	75	1350	11.2	1910	7350	38	1700	7.1	2410	9260	
F 51 3_48.9	48.9	57	1505	9.7	2600	7800	28.6	1800	5.8	3310	10100	
F 51 3_65.8	65.8	43	1650	7.9	2610	8640	21.3	1800	4.3	3380	11600	
F 51 3_83.2	83.2	34	1770	6.7	2630	9380	16.8	1800	3.4	3440	12000	
F 51 3_105.1	105.1	26.6	1800	5.4	2650	10400	13.3	1800	2.7	3460	12000	
F 51 3_129.9	129.9	21.6	1800	4.4	2670	11600	10.8	1800	2.2	3490	12000	
F 51 3_165.6	165.6	16.9	1800	3.4	2700	12000	8.5	1800	1.7	3500	12000	
F 51 3_202.4	202.4	13.8	1800	2.8	2710	12000	6.9	1800	1.4	3500	12000	
F 51 3_216.9	216.9	12.9	1800	2.6	2710	12000	6.5	1800	1.3	3500	12000	485
F 51 3_239.8	239.8	11.7	1800	2.4	2730	12000	5.8	1800	1.2	3500	12000	
F 51 3_262.1	262.1	10.7	1800	2.2	2730	12000	5.3	1800	1.1	3500	12000	
F 51 3_285.9	285.9	9.8	1800	2.0	2730	12000	4.9	1800	0.99	3500	12000	
F 51 3_317.3	317.3	8.8	1800	1.8	2740	12000	4.4	1800	0.89	3500	12000	
F 51 3_352.5	352.5	7.9	1800	1.6	2740	12000	4.0	1800	0.80	3500	12000	
F 51 4_429.1	429.1	6.5	1800	1.4	1930	12000	3.3	1800	0.68	2200	12000	
F 51 4_530.5	530.5	5.3	1800	1.1	1970	12000	2.6	1800	0.55	2200	12000	
F 51 4_676.3	676.3	4.1	1800	0.87	2020	12000	2.1	1800	0.43	2200	12000	
F 51 4_826.4	826.4	3.4	1800	0.71	2040	12000	1.7	1800	0.35	2200	12000	
F 51 4_885.5	885.5	3.2	1800	0.66	2050	12000	1.6	1800	0.33	2200	12000	
F 51 4_979.4	979.4	2.9	1800	0.60	2060	12000	1.4	1800	0.30	2200	12000	
F 51 4_1070	1070	2.6	1800	0.55	2070	12000	1.3	1800	0.27	2200	12000	
F 51 4_1168	1168	2.4	1800	0.50	2080	12000	1.2	1800	0.25	2200	12000	
F 51 4_1296	1296	2.2	1800	0.45	2090	12000	1.1	1800	0.23	2200	12000	
F 51 4_1439	1439	1.9	1800	0.41	2100	12000	1.0	1800	0.20	2200	12000	

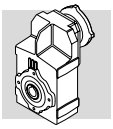

F 51 — 1800 Nm

	i	n_1 = 900 min^{-1}					n_1 = 500 min^{-1}					
		n_2 min^{-1}	M_{n2} Nm	P_{n1} kW	R_{n1} N	R_{n2} N	n_2 min^{-1}	M_{n2} Nm	P_{n1} kW	R_{n1} N	R_{n2} N	
F 51 2_7.2	7.2	125	1100	15.2	1940	6170	70	1100	8.4	3190	8140	
F 51 2_9.1	9.1	99	1100	12.1	2450	6900	55	1100	6.7	3440	9030	
F 51 2_11.1	11.1	81	1520	13.6	2450	6660	45	1700	8.4	3190	8480	
F 51 2_14.0	14.0	64	1620	11.5	2550	7250	36	1700	6.7	3440	9500	
F 51 2_18.8	18.8	48	1700	9.0	2690	8230	26.6	1700	5.0	3500	10900	
F 51 2_23.8	23.8	38	1700	7.1	2870	9250	21.0	1700	3.9	3500	12000	
F 51 2_30.0	30.0	30	1700	5.6	2960	10300	16.6	1700	3.1	3500	12000	
F 51 2_37.1	37.1	24.2	1700	4.5	3040	11400	13.5	1700	2.5	3500	12000	
F 51 3_48.9	48.9	18.4	1800	3.7	3500	12000	10.2	1800	2.1	3500	12000	
F 51 3_65.8	65.8	13.7	1800	2.8	3500	12000	7.6	1800	1.5	3500	12000	
F 51 3_83.2	83.2	10.8	1800	2.2	3500	12000	6.0	1800	1.2	3500	12000	
F 51 3_105.1	105.1	8.6	1800	1.7	3500	12000	4.8	1800	0.96	3500	12000	
F 51 3_129.9	129.9	6.9	1800	1.4	3500	12000	3.8	1800	0.78	3500	12000	
F 51 3_165.6	165.6	5.4	1800	1.1	3500	12000	3.0	1800	0.61	3500	12000	
F 51 3_202.4	202.4	4.4	1800	0.90	3500	12000	2.5	1800	0.50	3500	12000	
F 51 3_216.9	216.9	4.2	1800	0.84	3500	12000	2.3	1800	0.47	3500	12000	485
F 51 3_239.8	239.8	3.8	1800	0.76	3500	12000	2.1	1800	0.42	3500	12000	
F 51 3_262.1	262.1	3.4	1800	0.70	3500	12000	1.9	1800	0.39	3500	12000	
F 51 3_285.9	285.9	3.1	1800	0.64	3500	12000	1.7	1800	0.35	3500	12000	
F 51 3_317.3	317.3	2.8	1800	0.57	3500	12000	1.6	1800	0.32	3500	12000	
F 51 3_352.5	352.5	2.6	1800	0.52	3500	12000	1.4	1800	0.29	3500	12000	
F 51 4_429.1	429.1	2.1	1800	0.44	2200	12000	1.2	1800	0.24	2200	12000	
F 51 4_530.5	530.5	1.7	1800	0.36	2200	12000	0.94	1800	0.20	2200	12000	
F 51 4_676.3	676.3	1.3	1800	0.28	2200	12000	0.74	1800	0.15	2200	12000	
F 51 4_826.4	826.4	1.1	1800	0.23	2200	12000	0.61	1800	0.13	2200	12000	
F 51 4_885.5	885.5	1.0	1800	0.21	2200	12000	0.56	1800	0.12	2200	12000	
F 51 4_979.4	979.4	0.92	1800	0.19	2200	12000	0.51	1800	0.11	2200	12000	
F 51 4_1070	1070	0.84	1800	0.18	2200	12000	0.47	1800	0.10	2200	12000	
F 51 4_1168	1168	0.77	1800	0.16	2200	12000	0.43	1800	0.09	2200	12000	
F 51 4_1296	1296	0.69	1800	0.15	2200	12000	0.39	1800	0.08	2200	12000	
F 51 4_1439	1439	0.63	1800	0.13	2200	12000	0.35	1800	0.07	2200	12000	

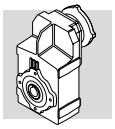

F 60 — 2900 Nm

	i	n_1 = 2800 min^{-1}					n_1 = 1400 min^{-1}					
		n_2 min^{-1}	M_{n2} Nm	P_{n1} kW	R_{n1} N	R_{n2} N	n_2 min^{-1}	M_{n2} Nm	P_{n1} kW	R_{n1} N	R_{n2} N	
F 60 3_9.0	9.0	311	920	32	—	13300	156	1160	20	—	16500	
F 60 3_9.7	9.7	289	1000	33	—	13600	144	1250	20	—	16700	
F 60 3_11.8	11.8	237	1030	28	—	14600	119	1300	17.4	—	17800	
F 60 3_12.7	12.7	220	1110	28	—	14700	110	1400	17.4	—	18000	
F 60 3_14.5	14.5	193	1110	24	—	15500	97	1400	15.3	—	19000	
F 60 3_15.7	15.7	178	1200	24	—	15600	89	1500	15.1	—	19200	
F 60 3_19.1	19.1	147	1200	19.9	—	16800	73	1500	12.4	—	20000	
F 60 3_20.7	20.7	135	1300	19.9	—	17000	68	1640	12.5	—	20000	
F 60 3_23.5	23.5	119	1260	17.0	—	17900	60	1590	10.7	—	20000	
F 60 3_25.4	25.4	110	1370	17.1	—	18100	55	1720	10.7	—	20000	
F 60 3_29.6	29.6	95	2750	29	820	15900	47	2900	15.5	2630	20000	
F 60 3_32.1	32.1	87	2800	28	1290	16200	44	2900	14.3	3260	20000	
F 60 3_38.8	38.8	72	2900	24	1260	17500	36	2900	11.8	3480	20000	
F 60 3_42.1	42.1	67	2900	22	1820	17900	33	2900	10.9	3720	20000	
F 60 3_47.8	47.8	59	2900	19.2	1770	19100	29.3	2900	9.6	3730	20000	
F 60 3_51.8	51.8	54	2900	17.7	2290	19500	27.0	2900	8.9	3830	20000	
F 60 3_63.0	63.0	44	2900	14.6	2310	20000	22.2	2900	7.3	3850	20000	
F 60 3_68.3	68.3	41	2900	13.4	2790	20000	20.5	2900	6.7	3940	20000	
F 60 3_77.6	77.6	36	2900	11.8	2620	20000	18.0	2900	5.9	3920	20000	
F 60 3_84.0	84.0	33	2900	10.9	2960	20000	16.7	2900	5.5	4010	20000	
F 60 3_98.2	98.2	28.5	2900	9.3	2910	20000	14.3	2900	4.7	3980	20000	
F 60 3_106.4	106.4	26.3	2900	8.6	3020	20000	13.2	2900	4.3	4070	20000	
F 60 3_120.5	120.5	23.2	2900	7.6	2970	20000	11.6	2900	3.8	4030	20000	
F 60 3_130.5	130.5	21.5	2900	7.0	3060	20000	10.7	2900	3.5	4110	20000	489
F 60 3_150.4	150.4	18.6	2900	6.1	3010	20000	9.3	2900	3.0	4060	20000	
F 60 3_162.9	162.9	17.2	2900	5.6	3090	20000	8.6	2900	2.8	4140	20000	
F 60 3_185.9	185.9	15.1	2900	4.9	3050	20000	7.5	2900	2.5	4100	20000	
F 60 3_201.4	201.4	13.9	2900	4.6	3130	20000	7.0	2900	2.3	4180	20000	
F 60 3_217.6	217.6	12.9	2900	4.2	3070	20000	6.4	2900	2.1	4120	20000	
F 60 3_235.8	235.8	11.9	2900	3.9	3140	20000	5.9	2900	1.9	4190	20000	
F 60 3_259.1	259.1	10.8	2900	3.5	3080	20000	5.4	2900	1.8	4130	20000	
F 60 3_280.7	280.7	10.0	2900	3.3	3150	20000	5.0	2900	1.6	4200	20000	
F 60 4_315.4	315.4	8.9	2900	3.0	3500	20000	4.4	2900	1.5	3500	20000	
F 60 4_341.7	341.7	8.2	2900	2.8	3500	20000	4.1	2900	1.4	3500	20000	
F 60 4_399.3	399.3	7.0	2900	2.4	3500	20000	3.5	2900	1.2	3500	20000	
F 60 4_432.6	432.6	6.5	2900	2.2	3500	20000	3.2	2900	1.1	3500	20000	
F 60 4_489.8	489.8	5.7	2900	1.9	3500	20000	2.9	2900	0.96	3500	20000	
F 60 4_530.7	530.7	5.3	2900	1.8	3500	20000	2.6	2900	0.89	3500	20000	
F 60 4_611.4	611.4	4.6	2900	1.5	3500	20000	2.3	2900	0.77	3500	20000	
F 60 4_662.4	662.4	4.2	2900	1.4	3500	20000	2.1	2900	0.71	3500	20000	
F 60 4_756.0	756.0	3.7	2900	1.2	3500	20000	1.9	2900	0.62	3500	20000	
F 60 4_819.0	819.0	3.4	2900	1.1	3500	20000	1.7	2900	0.57	3500	20000	
F 60 4_885.1	885.1	3.2	2900	1.1	3500	20000	1.6	2900	0.53	3500	20000	
F 60 4_958.9	958.9	2.9	2900	0.98	3500	20000	1.5	2900	0.49	3500	20000	
F 60 4_1054	1054	2.7	2900	0.89	3500	20000	1.3	2900	0.45	3500	20000	
F 60 4_1141	1141	2.5	2900	0.83	3500	20000	1.2	2900	0.41	3500	20000	

(—) Contact our technical service department advising radial load data (rotation direction, orientation, position)

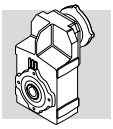

F 60 — 2900 Nm

	i	n_1 = 900 min^{-1}					n_1 = 500 min^{-1}					
		n_2 min^{-1}	M_{n2} Nm	P_{n1} kW	R_{n1} N	R_{n2} N	n_2 min^{-1}	M_{n2} Nm	P_{n1} kW	R_{n1} N	R_{n2} N	
F 60 3_9.0	9.0	100	1340	15.1	—	18800	56	1630	10.2	—	20000	
F 60 3_9.7	9.7	93	1460	15.3	—	19000	52	1780	10.4	—	20000	
F 60 3_11.8	11.8	76	1500	12.9	—	20000	42	1830	8.8	—	20000	
F 60 3_12.7	12.7	71	1620	13.0	—	20000	39	1900	8.4	600	20000	
F 60 3_14.5	14.5	62	1620	11.4	—	20000	34	1900	7.4	490	20000	
F 60 3_15.7	15.7	57	1750	11.3	—	20000	32	1900	6.8	1630	20000	
F 60 3_19.1	19.1	47	1750	9.3	—	20000	26.2	1900	5.6	1660	20000	
F 60 3_20.7	20.7	43	1900	9.3	—	20000	24.2	1900	5.2	2700	20000	
F 60 3_23.5	23.5	38	1840	8.0	—	20000	21.3	1900	4.6	2340	20000	
F 60 3_25.4	25.4	35	1900	7.6	620	20000	19.7	1900	4.2	3330	20000	
F 60 3_29.6	29.6	30	2900	10.0	4220	20000	16.9	2900	5.5	4700	20000	
F 60 3_32.1	32.1	28.0	2900	9.2	4350	20000	15.6	2900	5.1	4700	20000	
F 60 3_38.8	38.8	23.2	2900	7.6	4420	20000	12.9	2900	4.2	4700	20000	
F 60 3_42.1	42.1	21.4	2900	7.0	4530	20000	11.9	2900	3.9	4700	20000	
F 60 3_47.8	47.8	18.8	2900	6.2	4530	20000	10.5	2900	3.4	4700	20000	
F 60 3_51.8	51.8	17.4	2900	5.7	4640	20000	9.7	2900	3.2	4700	20000	
F 60 3_63.0	63.0	14.3	2900	4.7	4660	20000	7.9	2900	2.6	4700	20000	
F 60 3_68.3	68.3	13.2	2900	4.3	4700	20000	7.3	2900	2.4	4700	20000	
F 60 3_77.6	77.6	11.6	2900	3.8	4700	20000	6.4	2900	2.1	4700	20000	
F 60 3_84.0	84.0	10.7	2900	3.5	4700	20000	6.0	2900	1.9	4700	20000	
F 60 3_98.2	98.2	9.2	2900	3.0	4700	20000	5.1	2900	1.7	4700	20000	
F 60 3_106.4	106.4	8.5	2900	2.8	4700	20000	4.7	2900	1.5	4700	20000	
F 60 3_120.5	120.5	7.5	2900	2.4	4700	20000	4.1	2900	1.4	4700	20000	
F 60 3_130.5	130.5	6.9	2900	2.3	4700	20000	3.8	2900	1.3	4700	20000	489
F 60 3_150.4	150.4	6.0	2900	2.0	4700	20000	3.3	2900	1.1	4700	20000	
F 60 3_162.9	162.9	5.5	2900	1.8	4700	20000	3.1	2900	1.0	4700	20000	
F 60 3_185.9	185.9	4.8	2900	1.6	4700	20000	2.7	2900	0.88	4700	20000	
F 60 3_201.4	201.4	4.5	2900	1.5	4700	20000	2.5	2900	0.81	4700	20000	
F 60 3_217.6	217.6	4.1	2900	1.4	4700	20000	2.3	2900	0.75	4700	20000	
F 60 3_235.8	235.8	3.8	2900	1.3	4700	20000	2.1	2900	0.69	4700	20000	
F 60 3_259.1	259.1	3.5	2900	1.1	4700	20000	1.9	2900	0.63	4700	20000	
F 60 3_280.7	280.7	3.2	2900	1.1	4700	20000	1.8	2900	0.58	4700	20000	
F 60 4_315.4	315.4	2.9	2900	0.96	3500	20000	1.6	2900	0.53	3500	20000	
F 60 4_341.7	341.7	2.6	2900	0.89	3500	20000	1.5	2900	0.49	3500	20000	
F 60 4_399.3	399.3	2.3	2900	0.76	3500	20000	1.3	2900	0.42	3500	20000	
F 60 4_432.6	432.6	2.1	2900	0.70	3500	20000	1.2	2900	0.39	3500	20000	
F 60 4_489.8	489.8	1.8	2900	0.62	3500	20000	1.0	2900	0.34	3500	20000	
F 60 4_530.7	530.7	1.7	2900	0.57	3500	20000	0.94	2900	0.32	3500	20000	
F 60 4_611.4	611.4	1.5	2900	0.50	3500	20000	0.82	2900	0.28	3500	20000	
F 60 4_662.4	662.4	1.4	2900	0.46	3500	20000	0.75	2900	0.25	3500	20000	
F 60 4_756.0	756.0	1.2	2900	0.40	3500	20000	0.66	2900	0.22	3500	20000	
F 60 4_819.0	819.0	1.1	2900	0.37	3500	20000	0.61	2900	0.21	3500	20000	
F 60 4_885.1	885.1	1.0	2900	0.34	3500	20000	0.56	2900	0.19	3500	20000	
F 60 4_958.9	958.9	0.94	2900	0.32	3500	20000	0.52	2900	0.18	3500	20000	
F 60 4_1054	1054	0.85	2900	0.29	3500	20000	0.47	2900	0.16	3500	20000	
F 60 4_1141	1141	0.79	2900	0.27	3500	20000	0.44	2900	0.15	3500	20000	

(—) Contact our technical service department advising radial load data (rotation direction, orientation, position)

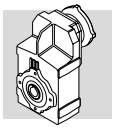

F 70 — 5000 Nm

	i	n_1 = 2800 min^{-1}					n_1 = 1400 min^{-1}					
		n_2 min^{-1}	M_{n2} Nm	P_{n1} kW	R_{n1} N	R_{n2} N	n_2 min^{-1}	M_{n2} Nm	P_{n1} kW	R_{n1} N	R_{n2} N	
F 70 3_10.0	10.0	280	2600	82	1410	14800	140	3200	51	1750	18200	493
F 70 3_10.9	10.9	257	2800	81	1510	14700	128	3450	50	1840	18100	
F 70 3_12.8	12.8	219	2900	72	860	15700	109	3600	44	880	19300	
F 70 3_13.9	13.9	201	3150	72	810	15600	101	3900	44	880	19100	
F 70 3_16.3	16.3	172	3250	63	570	16600	86	4000	39	710	20500	
F 70 3_17.7	17.7	158	3550	63	430	16400	79	4350	39	630	20200	
F 70 3_20.9	20.9	134	3450	52	690	18000	67	4000	30	2090	22700	
F 70 3_22.6	22.6	124	3750	52	640	17800	62	4350	30	2010	22500	
F 70 3_24.6	24.6	114	3550	46	560	19000	57	4000	26	2510	24200	
F 70 3_27.7	27.7	101	3750	43	5070	19600	51	4650	27	6410	24100	
F 70 3_30.0	30.0	93	4050	43	5080	19400	47	5000	26	6420	23900	
F 70 3_35.4	35.4	79	4150	37	5070	20900	40	5000	22	6440	25900	
F 70 3_38.4	38.4	73	4500	37	5060	20700	36	5000	21	6540	26500	
F 70 3_45.2	45.2	62	4600	32	5080	22200	31	5000	17.5	6590	28700	
F 70 3_49.0	49.0	57	4600	30	5170	22700	28.6	5000	16.1	6680	29300	
F 70 3_57.7	57.7	49	5000	27	5090	23800	24.3	5000	13.7	6680	31600	
F 70 3_62.5	62.5	45	5000	25	5170	24300	22.4	5000	12.7	6760	32300	
F 70 3_67.9	67.9	41	5000	23	5110	25500	20.6	5000	11.6	6710	33600	
F 70 3_73.6	73.6	38	5000	21	5190	26100	19.0	5000	10.7	6790	34400	
F 70 3_85.4	85.4	33	5000	18.5	5190	28000	16.4	5000	9.3	6780	35000	
F 70 3_92.5	92.5	30	5000	17.1	5260	28700	15.1	5000	8.5	6860	35000	
F 70 3_101.2	101.2	27.7	5000	15.6	5220	30000	13.8	5000	7.8	6820	35000	
F 70 3_109.6	109.6	25.5	5000	14.4	5290	30700	12.8	5000	7.2	6890	35000	
F 70 3_122.7	122.7	22.8	5000	12.9	5250	32300	11.4	5000	6.4	6850	35000	
F 70 3_133.0	133.0	21.1	5000	11.9	5320	33100	10.5	5000	5.9	6920	35000	
F 70 3_153.8	153.8	18.2	5000	10.3	5280	35000	9.1	5000	5.1	6880	35000	
F 70 3_166.7	166.7	16.8	5000	9.5	5350	35000	8.4	5000	4.7	6950	35000	
F 70 3_180.9	180.9	15.5	5000	8.7	5310	35000	7.7	5000	4.4	6910	35000	
F 70 3_196.0	196.0	14.3	5000	8.1	5370	35000	7.1	5000	4.0	6970	35000	
F 70 4_216.5	216.5	12.9	5000	7.5	2130	35000	6.5	5000	3.7	2860	35000	
F 70 4_234.6	234.6	11.9	5000	6.9	2130	35000	6.0	5000	3.5	2860	35000	
F 70 4_280.9	280.9	10.0	5000	5.8	2200	35000	5.0	5000	2.9	2940	35000	
F 70 4_304.3	304.3	9.2	5000	5.3	2200	35000	4.6	5000	2.7	2940	35000	
F 70 4_372.5	372.5	7.5	5000	4.4	2260	35000	3.8	5000	2.2	3000	35000	
F 70 4_403.5	403.5	6.9	5000	4.0	2260	35000	3.5	5000	2.0	3000	35000	
F 70 4_471.2	471.2	5.9	5000	3.4	2300	35000	3.0	5000	1.7	3040	35000	
F 70 4_510.4	510.4	5.5	5000	3.2	2300	35000	2.7	5000	1.6	3040	35000	
F 70 4_606.8	606.8	4.6	5000	2.7	2340	35000	2.3	5000	1.3	3070	35000	
F 70 4_657.4	657.4	4.3	5000	2.5	2340	35000	2.1	5000	1.2	3070	35000	
F 70 4_759.0	759.0	3.7	5000	2.1	2360	35000	1.8	5000	1.1	3090	35000	
F 70 4_822.2	822.2	3.4	5000	2.0	2360	35000	1.7	5000	1.0	3090	35000	
F 70 4_899.4	899.4	3.1	5000	1.8	2370	35000	1.6	5000	0.90	3110	35000	
F 70 4_974.4	974.4	2.9	5000	1.7	2370	35000	1.4	5000	0.83	3110	35000	
F 70 4_1091	1091	2.6	5000	1.5	2390	35000	1.3	5000	0.74	3120	35000	
F 70 4_1182	1182	2.4	5000	1.4	2390	35000	1.2	5000	0.69	3120	35000	
F 70 4_1368	1368	2.0	5000	1.2	2400	35000	1.0	5000	0.59	3130	35000	
F 70 4_1481	1481	1.9	5000	1.1	2400	35000	0.95	5000	0.55	3130	35000	
F 70 4_1585	1585	1.8	5000	1.0	2410	35000	0.88	5000	0.51	3140	35000	
F 70 4_1717	1717	1.6	5000	0.95	2410	35000	0.82	5000	0.47	3140	35000	
F 70 4_2019	2019	1.4	5000	0.80	2420	35000	0.69	5000	0.40	3150	35000	
F 70 4_2188	2188	1.3	5000	0.74	2420	35000	0.64	5000	0.37	3150	35000	

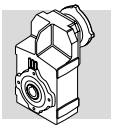

F 70 — 5000 Nm

	i	n_1 = 900 min^{-1}					n_1 = 500 min^{-1}					
		n_2 min^{-1}	M_{n2} Nm	P_{n1} kW	R_{n1} N	R_{n2} N	n_2 min^{-1}	M_{n2} Nm	P_{n1} kW	R_{n1} N	R_{n2} N	
F 70 3_10.0	10.0	90	3200	33	4870	21700	50	3200	18.1	7000	27000	493
F 70 3_10.9	10.9	83	3450	32	4970	21700	46	3450	17.9	7000	27200	
F 70 3_12.8	12.8	70	3850	31	2540	22500	39	3600	15.9	7000	28300	
F 70 3_13.9	13.9	65	4200	31	2380	22400	36	3900	15.8	7000	28300	
F 70 3_16.3	16.3	55	4000	25	3830	24500	31	4000	13.9	7000	30700	
F 70 3_17.7	17.7	51	4350	25	3750	24400	28.2	4350	13.9	7000	30800	
F 70 3_20.9	20.9	43	4000	19.5	5210	27000	23.9	4000	10.8	7000	33700	
F 70 3_22.6	22.6	40	4350	19.6	5130	26900	22.1	4350	10.9	7000	33800	
F 70 3_24.6	24.6	37	4000	16.5	5630	28700	20.3	4000	9.2	7000	35000	
F 70 3_27.7	27.7	32	5000	18.4	7000	28100	18.1	4650	9.5	7000	35000	
F 70 3_30.0	30.0	30	5000	16.9	7000	28800	16.7	5000	9.4	7000	35000	
F 70 3_35.4	35.4	25.4	5000	14.4	7000	31000	14.1	5000	8.0	7000	35000	
F 70 3_38.4	38.4	23.4	5000	13.2	7000	31700	13.0	5000	7.4	7000	35000	
F 70 3_45.2	45.2	19.9	5000	11.2	7000	34100	11.1	5000	6.2	7000	35000	
F 70 3_49.0	49.0	18.4	5000	10.4	7000	34900	10.2	5000	5.8	7000	35000	
F 70 3_57.7	57.7	15.6	5000	8.8	7000	35000	8.7	5000	4.9	7000	35000	
F 70 3_62.5	62.5	14.4	5000	8.1	7000	35000	8.0	5000	4.5	7000	35000	
F 70 3_67.9	67.9	13.3	5000	7.5	7000	35000	7.4	5000	4.2	7000	35000	
F 70 3_73.6	73.6	12.2	5000	6.9	7000	35000	6.8	5000	3.8	7000	35000	
F 70 3_85.4	85.4	10.5	5000	6.0	7000	35000	5.9	5000	3.3	7000	35000	
F 70 3_92.5	92.5	9.7	5000	5.5	7000	35000	5.4	5000	3.1	7000	35000	
F 70 3_101.2	101.2	8.9	5000	5.0	7000	35000	4.9	5000	2.8	7000	35000	
F 70 3_109.6	109.6	8.2	5000	4.6	7000	35000	4.6	5000	2.6	7000	35000	
F 70 3_122.7	122.7	7.3	5000	4.1	7000	35000	4.1	5000	2.3	7000	35000	
F 70 3_133.0	133.0	6.8	5000	3.8	7000	35000	3.8	5000	2.1	7000	35000	
F 70 3_153.8	153.8	5.9	5000	3.3	7000	35000	3.3	5000	1.8	7000	35000	
F 70 3_166.7	166.7	5.4	5000	3.0	7000	35000	3.0	5000	1.7	7000	35000	
F 70 3_180.9	180.9	5.0	5000	2.8	7000	35000	2.8	5000	1.6	7000	35000	
F 70 3_196.0	196.0	4.6	5000	2.6	7000	35000	2.6	5000	1.4	7000	35000	
F 70 4_216.5	216.5	4.2	5000	2.4	3430	35000	2.3	5000	1.3	3500	35000	
F 70 4_234.6	234.6	3.8	5000	2.2	3430	35000	2.1	5000	1.2	3500	35000	
F 70 4_280.9	280.9	3.2	5000	1.9	3500	35000	1.8	5000	1.0	3500	35000	
F 70 4_304.3	304.3	3.0	5000	1.7	3500	35000	1.6	5000	0.95	3500	35000	
F 70 4_372.5	372.5	2.4	5000	1.4	3500	35000	1.3	5000	0.78	3500	35000	
F 70 4_403.5	403.5	2.2	5000	1.3	3500	35000	1.2	5000	0.72	3500	35000	
F 70 4_471.2	471.2	1.9	5000	1.1	3500	35000	1.1	5000	0.62	3500	35000	
F 70 4_510.4	510.4	1.8	5000	1.0	3500	35000	0.98	5000	0.57	3500	35000	
F 70 4_606.8	606.8	1.5	5000	0.86	3500	35000	0.82	5000	0.48	3500	35000	
F 70 4_657.4	657.4	1.4	5000	0.79	3500	35000	0.76	5000	0.44	3500	35000	
F 70 4_759.0	759.0	1.2	5000	0.69	3500	35000	0.66	5000	0.38	3500	35000	
F 70 4_822.2	822.2	1.1	5000	0.63	3500	35000	0.61	5000	0.35	3500	35000	
F 70 4_899.4	899.4	1.0	5000	0.58	3500	35000	0.56	5000	0.32	3500	35000	
F 70 4_974.4	974.4	0.92	5000	0.54	3500	35000	0.51	5000	0.30	3500	35000	
F 70 4_1091	1091	0.82	5000	0.48	3500	35000	0.46	5000	0.27	3500	35000	
F 70 4_1182	1182	0.76	5000	0.44	3500	35000	0.42	5000	0.25	3500	35000	
F 70 4_1368	1368	0.66	5000	0.38	3500	35000	0.37	5000	0.21	3500	35000	
F 70 4_1481	1481	0.61	5000	0.35	3500	35000	0.34	5000	0.20	3500	35000	
F 70 4_1585	1585	0.57	5000	0.33	3500	35000	0.32	5000	0.18	3500	35000	
F 70 4_1717	1717	0.52	5000	0.30	3500	35000	0.29	5000	0.17	3500	35000	
F 70 4_2019	2019	0.45	5000	0.26	3500	35000	0.25	5000	0.14	3500	35000	
F 70 4_2188	2188	0.41	5000	0.24	3500	35000	0.23	5000	0.13	3500	35000	

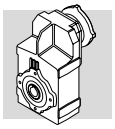

F 80 — 8000 Nm

	i	n_1 = 2800 min^{-1}					n_1 = 1400 min^{-1}					
		n_2	M_{n2}	P_{n1}	R_{n1}	R_{n2}	n_2	M_{n2}	P_{n1}	R_{n1}	R_{n2}	
		min^{-1}	Nm	kW	N	N	min^{-1}	Nm	kW	N	N	
F 80 3_10.3	10.3	272	3250	100	610	17200	136	4100	63	220	21800	
F 80 3_11.2	11.2	250	3520	99	620	17800	125	4440	63	230	21700	
F 80 3_12.9	12.9	217	3560	87	670	18900	109	4480	55	350	23100	
F 80 3_14.0	14.0	200	3850	87	700	18800	100	4860	55	310	23000	
F 80 3_16.2	16.2	173	3760	73	760	20300	86	4740	46	430	24800	
F 80 3_17.6	17.6	159	4000	72	730	20300	80	5140	46	410	24700	
F 80 3_20.3	20.3	138	4060	63	780	21700	69	5120	40	440	26500	
F 80 3_22.0	22.0	127	4400	63	780	21600	64	5540	40	470	26400	
F 80 3_25.2	25.2	111	4230	53	700	23300	56	5330	33	360	28500	
F 80 3_28.8	28.8	97	6550	72	4590	20500	49	8000	44	5890	25400	
F 80 3_31.3	31.3	89	7100	72	4590	20000	45	8000	40	6040	26000	
F 80 3_36.0	36.0	78	7250	64	4560	21500	39	8000	35	6110	28100	
F 80 3_39.0	39.0	72	6700	54	4890	23000	36	8000	32	6240	28800	
F 80 3_45.3	45.3	62	7900	55	4440	22700	31	8000	28	6240	31100	
F 80 3_49.1	49.1	57	8000	52	4750	23200	28.5	8000	26	6360	31900	
F 80 3_56.7	56.7	49	8000	45	4780	25200	24.7	8000	22	6390	34300	
F 80 3_61.5	61.5	46	8000	41	4890	25800	22.8	8000	21	6500	35100	
F 80 3_70.4	70.4	40	8000	36	4850	27800	19.9	8000	18.0	6460	37500	
F 80 3_76.3	76.3	37	8000	33	4950	28500	18.3	8000	16.6	6560	38400	
F 80 3_85.2	85.2	33	8000	30	4940	30300	16.4	8000	14.8	6550	40500	
F 80 3_92.3	92.3	30	8000	27	5040	31000	15.2	8000	13.7	6640	41500	
F 80 3_105.0	105.0	26.7	8000	24	5000	33200	13.3	8000	12.0	6610	44000	
F 80 3_113.8	113.8	24.6	8000	22	5090	34000	12.3	8000	11.1	6700	45000	
F 80 3_122.5	122.5	22.9	8000	21	5020	35400	11.4	8000	10.3	6630	45000	
F 80 3_132.7	132.7	21.1	8000	19.1	5110	36200	10.6	8000	9.5	6720	45000	
F 80 3_147.9	147.9	18.9	8000	17.1	5060	38200	9.5	8000	8.6	6660	45000	496
F 80 3_160.2	160.2	17.5	8000	15.8	5140	39100	8.7	8000	7.9	6750	45000	
F 80 3_184.6	184.6	15.2	8000	13.7	5090	41800	7.6	8000	6.9	6700	45000	
F 80 3_200.0	200.0	14.0	8000	12.7	5180	42800	7.0	8000	6.3	6780	45000	
F 80 4_218.5	218.5	12.8	8000	11.9	1020	45000	6.4	8000	5.9	2400	45000	
F 80 4_273.9	273.9	10.2	8000	9.5	1470	45000	5.1	8000	4.7	2680	45000	
F 80 4_296.7	296.7	9.4	8000	8.8	1470	45000	4.7	8000	4.4	2680	45000	
F 80 4_353.7	353.7	7.9	8000	7.3	1850	45000	4.0	8000	3.7	2770	45000	
F 80 4_383.2	383.2	7.3	8000	6.8	1850	45000	3.7	8000	3.4	2770	45000	
F 80 4_451.5	451.5	6.2	8000	5.8	2040	45000	3.1	8000	2.9	2820	45000	
F 80 4_489.1	489.1	5.7	8000	5.3	2040	45000	2.9	8000	2.7	2820	45000	
F 80 4_563.9	563.9	5.0	8000	4.6	2130	45000	2.5	8000	2.3	2860	45000	
F 80 4_610.9	610.9	4.6	8000	4.3	2130	45000	2.3	8000	2.1	2860	45000	
F 80 4_714.9	714.9	3.9	8000	3.6	2160	45000	2.0	8000	1.8	2890	45000	
F 80 4_774.4	774.4	3.6	8000	3.4	2160	45000	1.8	8000	1.7	2890	45000	
F 80 4_897.3	897.3	3.1	8000	2.9	2200	45000	1.6	8000	1.4	2930	45000	
F 80 4_972.0	972.0	2.9	8000	2.7	2200	45000	1.4	8000	1.3	2930	45000	
F 80 4_1058	1058	2.6	8000	2.5	2210	45000	1.3	8000	1.2	2950	45000	
F 80 4_1146	1146	2.4	8000	2.3	2210	45000	1.2	8000	1.1	2950	45000	
F 80 4_1277	1277	2.2	8000	2.0	2230	45000	1.1	8000	1.0	2960	45000	
F 80 4_1384	1384	2.0	8000	1.9	2230	45000	1.0	8000	0.94	2960	45000	
F 80 4_1578	1578	1.8	8000	1.6	2240	45000	0.89	8000	0.82	2970	45000	
F 80 4_1709	1709	1.6	8000	1.5	2240	45000	0.82	8000	0.76	2970	45000	
F 80 4_1834	1834	1.5	8000	1.4	2250	45000	0.76	8000	0.71	2980	45000	
F 80 4_1987	1987	1.4	8000	1.3	2250	45000	0.70	8000	0.65	2980	45000	

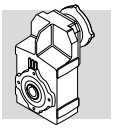

F 80 — 8000 Nm

	i	n_1 = 900 min^{-1}					n_1 = 500 min^{-1}					
		n_2 min^{-1}	M_{n2} Nm	P_{n1} kW	R_{n1} N	R_{n2} N	n_2 min^{-1}	M_{n2} Nm	P_{n1} kW	R_{n1} N	R_{n2} N	
F 80 3_10.3	10.3	87	4740	47	—	24700	49	5770	32	—	29300	
F 80 3_11.2	11.2	80	5140	47	—	24600	45	6250	32	—	29200	
F 80 3_12.9	12.9	70	5200	41	—	26200	39	6320	28	—	31100	
F 80 3_14.0	14.0	64	5620	41	—	26100	36	6800	27	—	31000	
F 80 3_16.2	16.2	56	5490	34	—	28200	31	6250	22	1540	34200	
F 80 3_17.6	17.6	51	5960	34	—	28100	28.4	6800	22	1410	30000	
F 80 3_20.3	20.3	44	5930	30	—	30100	24.6	6250	17.4	3710	37300	
F 80 3_22.0	22.0	41	6420	30	—	30000	22.7	6800	17.5	3590	37200	
F 80 3_25.2	25.2	36	6175	25	—	32400	19.8	6250	14.0	4660	40500	
F 80 3_28.8	28.8	31	8000	28	7000	31000	17.4	8000	15.7	7000	39600	
F 80 3_31.3	31.3	28.8	8000	26	7000	31700	16.0	8000	14.4	7000	40600	
F 80 3_36.0	36.0	25.0	8000	23	7000	34100	13.9	8000	12.6	7000	43300	
F 80 3_39.0	39.0	23.1	8000	21	7000	34900	12.8	8000	11.6	7000	44300	
F 80 3_45.3	45.3	19.9	8000	18.0	7000	37500	11.0	8000	10.0	7000	45000	
F 80 3_49.1	49.1	18.3	8000	16.6	7000	38400	10.2	8000	9.2	7000	45000	
F 80 3_56.7	56.7	15.9	8000	14.3	7000	41100	8.8	8000	8.0	7000	45000	
F 80 3_61.5	61.5	14.6	8000	13.2	7000	42000	8.1	8000	7.3	7000	45000	
F 80 3_70.4	70.4	12.8	8000	11.6	7000	44700	7.1	8000	6.4	7000	45000	
F 80 3_76.3	76.3	11.8	8000	10.7	7000	45000	6.6	8000	5.9	7000	45000	
F 80 3_85.2	85.2	10.6	8000	9.5	7000	45000	5.9	8000	5.3	7000	45000	
F 80 3_92.3	92.3	9.8	8000	8.8	7000	45000	5.4	8000	4.9	7000	45000	
F 80 3_105.0	105.0	8.6	8000	7.7	7000	45000	4.8	8000	4.3	7000	45000	
F 80 3_113.8	113.8	7.9	8000	7.1	7000	45000	4.4	8000	4.0	7000	45000	
F 80 3_122.5	122.5	7.3	8000	6.6	7000	45000	4.1	8000	3.7	7000	45000	
F 80 3_132.7	132.7	6.8	8000	6.1	7000	45000	3.8	8000	3.4	7000	45000	
F 80 3_147.9	147.9	6.1	8000	5.5	7000	45000	3.4	8000	3.1	7000	45000	496
F 80 3_160.2	160.2	5.6	8000	5.1	7000	45000	3.1	8000	2.8	7000	45000	
F 80 3_184.6	184.6	4.9	8000	4.4	7000	45000	2.7	8000	2.4	7000	45000	
F 80 3_200.0	200.0	4.5	8000	4.1	7000	45000	2.5	8000	2.3	7000	45000	
F 80 4_218.5	218.5	4.1	8000	3.8	3130	45000	2.3	8000	2.1	3500	45000	
F 80 4_273.9	273.9	3.3	8000	3.0	3240	45000	1.8	8000	1.7	3500	45000	
F 80 4_296.7	296.7	3.0	8000	2.8	3240	45000	1.7	8000	1.6	3500	45000	
F 80 4_353.7	353.7	2.5	8000	2.4	3330	45000	1.4	8000	1.3	3500	45000	
F 80 4_383.2	383.2	2.3	8000	2.2	3330	45000	1.3	8000	1.2	3500	45000	
F 80 4_451.5	451.5	2.0	8000	1.8	3380	45000	1.1	8000	1.0	3500	45000	
F 80 4_489.1	489.1	1.8	8000	1.7	3380	45000	1.0	8000	0.95	3500	45000	
F 80 4_563.9	563.9	1.6	8000	1.5	3420	45000	0.89	8000	0.82	3500	45000	
F 80 4_610.9	610.9	1.5	8000	1.4	3420	45000	0.82	8000	0.76	3500	45000	
F 80 4_714.9	714.9	1.3	8000	1.2	3460	45000	0.70	8000	0.65	3500	45000	
F 80 4_774.4	774.4	1.2	8000	1.1	3460	45000	0.65	8000	0.60	3500	45000	
F 80 4_897.3	897.3	1.0	8000	0.93	3490	45000	0.56	8000	0.52	3500	45000	
F 80 4_972.0	972.0	0.93	8000	0.86	3490	45000	0.51	8000	0.48	3500	45000	
F 80 4_1058	1058	0.85	8000	0.79	3500	45000	0.47	8000	0.44	3500	45000	
F 80 4_1146	1146	0.79	8000	0.73	3500	45000	0.44	8000	0.40	3500	45000	
F 80 4_1277	1277	0.70	8000	0.65	3500	45000	0.39	8000	0.36	3500	45000	
F 80 4_1384	1384	0.65	8000	0.60	3500	45000	0.36	8000	0.34	3500	45000	
F 80 4_1578	1578	0.57	8000	0.53	3500	45000	0.32	8000	0.29	3500	45000	
F 80 4_1709	1709	0.53	8000	0.49	3500	45000	0.29	8000	0.27	3500	45000	
F 80 4_1834	1834	0.49	8000	0.46	3500	45000	0.27	8000	0.25	3500	45000	
F 80 4_1987	1987	0.45	8000	0.42	3500	45000	0.25	8000	0.23	3500	45000	

(—) Contact our technical service department advising radial load data (rotation direction, orientation, position)

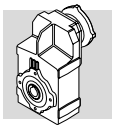

F 90 — 14000 Nm

	i	n_1 = 2800 min^{-1}					n_1 = 1400 min^{-1}					
		n_2 min^{-1}	M_{n2} Nm	P_{n1} kW	R_{n1} N	R_{n2} N	n_2 min^{-1}	M_{n2} Nm	P_{n1} kW	R_{n1} N	R_{n2} N	
F 90 3_10.3	10.3	272	6500	200	5480	23800	136	8000	123	8000	29300	
F 90 3_11.1	11.1	252	7150	204	5280	23300	126	8800	125	7770	28700	
F 90 3_13.4	13.4	209	7550	178	4880	25000	104	9300	110	7280	30700	
F 90 3_14.5	14.5	193	8100	177	5000	24700	97	10000	109	7400	30300	
F 90 3_16.5	16.5	170	8400	161	4540	26000	85	10300	99	6960	32000	
F 90 3_17.9	17.9	156	8950	158	4560	25700	78	11000	97	7180	31700	
F 90 3_20.6	20.6	136	9200	141	3980	27400	68	11300	87	6260	33700	
F 90 3_22.3	22.3	126	9750	138	4280	27100	63	12000	85	6590	33400	
F 90 3_25.4	25.4	110	10050	125	3620	28700	55	12000	75	6310	36000	
F 90 3_28.6	28.6	98	9750	108	9800	30900	49	12000	66	12400	38000	
F 90 3_31.0	31.0	90	10550	108	9800	30300	45	13000	66	12400	37300	
F 90 3_37.4	37.4	75	10950	93	9820	32800	37	13500	57	12400	40400	
F 90 3_40.5	40.5	69	11900	93	9820	32100	35	14000	55	12500	40600	
F 90 3_46.1	46.1	61	12050	83	9840	34300	30	14000	48	12600	43600	
F 90 3_49.9	49.9	56	13050	83	9840	33500	28.1	14000	44	12700	44700	
F 90 3_57.3	57.3	49	13050	72	9810	36300	24.4	14000	39	12700	48100	
F 90 3_62.1	62.1	45	14000	71	9830	35600	22.5	14000	36	12800	49300	
F 90 3_70.8	70.8	40	14000	63	9830	38500	19.8	14000	31	12800	52700	
F 90 3_76.7	76.7	37	14000	58	9960	39500	18.3	14000	29	13000	54000	
F 90 3_88.4	88.4	32	14000	50	9930	42800	15.8	14000	25	12900	55000	
F 90 3_95.8	95.8	29.2	14000	46	10100	43800	14.6	14000	23	13100	55000	
F 90 3_103.3	103.3	27.1	14000	43	9960	45900	13.6	14000	21	13000	55000	
F 90 3_111.9	111.9	25.0	14000	40	10100	47100	12.5	14000	19.8	13100	55000	
F 90 3_126.8	126.8	22.1	14000	35	10000	50300	11.0	14000	17.5	13000	55000	
F 90 3_137.3	137.3	20.4	14000	32	10100	51500	10.2	14000	16.1	13100	55000	
F 90 3_150.3	150.3	18.6	14000	29	10100	54000	9.3	14000	14.7	13100	55000	499
F 90 3_162.8	162.8	17.2	14000	27	10200	55000	8.6	14000	13.6	13200	55000	
F 90 3_179.2	179.2	15.6	14000	25	10200	55000	7.8	14000	12.4	13100	55000	
F 90 3_194.2	194.2	14.4	14000	23	10200	55000	7.2	14000	11.4	13200	55000	
F 90 4_213.6	213.6	13.1	14000	21	—	55000	6.6	14000	10.6	—	55000	
F 90 4_231.4	231.4	12.1	14000	19.6	—	55000	6.1	14000	9.8	—	55000	
F 90 4_268.7	268.7	10.4	14000	16.9	—	55000	5.2	14000	8.5	420	55000	
F 90 4_291.1	291.1	9.6	14000	15.6	—	55000	4.8	14000	7.8	420	55000	
F 90 4_361.8	361.8	7.7	14000	12.6	—	55000	3.9	14000	6.3	990	55000	
F 90 4_392.0	392.0	7.1	14000	11.6	—	55000	3.6	14000	5.8	990	55000	
F 90 4_457.5	457.5	6.1	14000	9.9	—	55000	3.1	14000	5.0	1390	55000	
F 90 4_495.6	495.6	5.6	14000	9.2	—	55000	2.8	14000	4.6	1390	55000	
F 90 4_577.5	577.5	4.8	14000	7.9	—	55000	2.4	14000	3.9	1600	55000	
F 90 4_625.6	625.6	4.5	14000	7.3	—	55000	2.2	14000	3.6	1600	55000	
F 90 4_714.0	714.0	3.9	14000	6.4	—	55000	2.0	14000	3.2	1800	55000	
F 90 4_773.4	773.4	3.6	14000	5.9	—	55000	1.8	14000	2.9	1800	55000	
F 90 4_910.2	910.2	3.1	14000	5.0	—	55000	1.5	14000	2.5	2020	55000	
F 90 4_986.0	986.0	2.8	14000	4.6	—	55000	1.4	14000	2.3	2020	55000	
F 90 4_1112	1112	2.5	14000	4.1	—	55000	1.3	14000	2.0	2110	55000	
F 90 4_1205	1205	2.3	14000	3.8	—	55000	1.2	14000	1.9	2110	55000	
F 90 4_1318	1318	2.1	14000	3.4	—	55000	1.1	14000	1.7	2220	55000	
F 90 4_1428	1428	2.0	14000	3.2	—	55000	0.98	14000	1.6	2220	55000	
F 90 4_1571	1571	1.8	14000	2.9	—	55000	0.89	14000	1.4	2260	55000	
F 90 4_1702	1702	1.6	14000	2.7	—	55000	0.82	14000	1.3	2260	55000	
F 90 4_1937	1937	1.4	14000	2.3	—	55000	0.72	14000	1.2	2300	55000	
F 90 4_2099	2099	1.3	14000	2.2	—	55000	0.67	14000	1.1	2300	55000	

(—) Contact our technical service department advising radial load data (rotation direction, orientation, position)

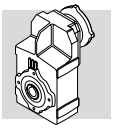

F 90 — 14000 Nm

	i	n_1 = 900 min^{-1}					n_1 = 500 min^{-1}					
		n_2 min^{-1}	M_{n2} Nm	P_{n1} kW	R_{n1} N	R_{n2} N	n_2 min^{-1}	M_{n2} Nm	P_{n1} kW	R_{n1} N	R_{n2} N	
F 90 3_10.3	10.3	87	9150	90	10000	33400	49	9600	53	15000	41900	
F 90 3_11.1	11.1	81	10050	92	9780	32700	45	10400	53	15000	41600	
F 90 3_13.4	13.4	67	10600	80	9270	35100	37	12500	53	12700	42100	
F 90 3_14.5	14.5	62	11400	80	9390	34600	34	13550	53	12700	41400	
F 90 3_16.5	16.5	55	11750	72	8890	36600	30	12300	42	14600	46400	
F 90 3_17.9	17.9	50	12550	71	9140	36200	27.9	13150	41	14800	46200	
F 90 3_20.6	20.6	44	12200	60	9100	39700	24.3	12200	33	15000	51000	
F 90 3_22.3	22.3	40	13200	60	9120	39000	22.4	13200	33	15000	50700	
F 90 3_25.4	25.4	35	12000	48	10400	43800	19.7	12000	27	15000	55000	
F 90 3_28.6	28.6	31	13700	49	14400	43400	17.5	14000	28	15000	55000	
F 90 3_31.0	31.0	29.0	14000	46	14500	44000	16.1	14000	26	15000	55000	
F 90 3_37.4	37.4	24.1	14000	38	14700	48400	13.4	14000	21	15000	55000	
F 90 3_40.5	40.5	22.2	14000	35	14800	49600	12.3	14000	19.5	15000	55000	
F 90 3_46.1	46.1	19.5	14000	31	14900	53000	10.8	14000	17.2	15000	55000	
F 90 3_49.9	49.9	18.0	14000	29	15000	54200	10.0	14000	15.8	15000	55000	
F 90 3_57.3	57.3	15.7	14000	25	15000	55000	8.7	14000	13.8	15000	55000	
F 90 3_62.1	62.1	14.5	14000	23	15000	55000	8.1	14000	12.7	15000	55000	
F 90 3_70.8	70.8	12.7	14000	20	15000	55000	7.1	14000	11.2	15000	55000	
F 90 3_76.7	76.7	11.7	14000	18.6	15000	55000	6.5	14000	10.3	15000	55000	
F 90 3_88.4	88.4	10.2	14000	16.1	15000	55000	5.7	14000	8.9	15000	55000	
F 90 3_95.8	95.8	9.4	14000	14.9	15000	55000	5.2	14000	8.3	15000	55000	
F 90 3_103.3	103.3	8.7	14000	13.8	15000	55000	4.8	14000	7.7	15000	55000	
F 90 3_111.9	111.9	8.0	14000	12.7	15000	55000	4.5	14000	7.1	15000	55000	
F 90 3_126.8	126.8	7.1	14000	11.2	15000	55000	3.9	14000	6.2	15000	55000	
F 90 3_137.3	137.3	6.6	14000	10.4	15000	55000	3.6	14000	5.8	15000	55000	
F 90 3_150.3	150.3	6.0	14000	9.5	15000	55000	3.3	14000	5.3	15000	55000	499
F 90 3_162.8	162.8	5.5	14000	8.7	15000	55000	3.1	14000	4.9	15000	55000	
F 90 3_179.2	179.2	5.0	14000	7.9	15000	55000	2.8	14000	4.4	15000	55000	
F 90 3_194.2	194.2	4.6	14000	7.3	15000	55000	2.6	14000	4.1	15000	55000	
F 90 4_213.6	213.6	4.2	14000	6.8	810	55000	2.3	14000	3.8	2350	55000	
F 90 4_231.4	231.4	3.9	14000	6.3	810	55000	2.2	14000	3.5	2350	55000	
F 90 4_268.7	268.7	3.3	14000	5.4	1390	55000	1.9	14000	3.0	2920	55000	
F 90 4_291.1	291.1	3.1	14000	5.0	1390	55000	1.7	14000	2.8	2920	55000	
F 90 4_361.8	361.8	2.5	14000	4.0	1960	55000	1.4	14000	2.2	3390	55000	
F 90 4_392.0	392.0	2.3	14000	3.7	1960	55000	1.3	14000	2.1	3390	55000	
F 90 4_457.5	457.5	2.0	14000	3.2	2360	55000	1.1	14000	1.8	3490	55000	
F 90 4_495.6	495.6	1.8	14000	2.9	2360	55000	1.0	14000	1.6	3490	55000	
F 90 4_577.5	577.5	1.6	14000	2.5	2570	55000	0.87	14000	1.4	3500	55000	
F 90 4_625.6	625.6	1.4	14000	2.3	2570	55000	0.80	14000	1.3	3500	55000	
F 90 4_714.0	714.0	1.3	14000	2.0	2770	55000	0.70	14000	1.1	3500	55000	
F 90 4_773.4	773.4	1.2	14000	1.9	2770	55000	0.65	14000	1.0	3500	55000	
F 90 4_910.2	910.2	0.99	14000	1.6	2840	55000	0.55	14000	0.89	3500	55000	
F 90 4_986.0	986.0	0.91	14000	1.5	2840	55000	0.51	14000	0.82	3500	55000	
F 90 4_1112	1112	0.81	14000	1.3	2860	55000	0.45	14000	0.73	3500	55000	
F 90 4_1205	1205	0.75	14000	1.2	2860	55000	0.41	14000	0.67	3500	55000	
F 90 4_1318	1318	0.68	14000	1.1	2890	55000	0.38	14000	0.62	3500	55000	
F 90 4_1428	1428	0.63	14000	1.0	2890	55000	0.35	14000	0.57	3500	55000	
F 90 4_1571	1571	0.57	14000	0.93	2900	55000	0.32	14000	0.52	3500	55000	
F 90 4_1702	1702	0.53	14000	0.86	2900	55000	0.29	14000	0.48	3500	55000	
F 90 4_1937	1937	0.46	14000	0.75	2910	55000	0.26	14000	0.42	3500	55000	
F 90 4_2099	2099	0.43	14000	0.70	2910	55000	0.24	14000	0.39	3500	55000	

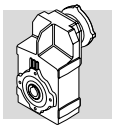

62 MOTOR AVAILABILITY

Please be aware that motor-gearbox combinations resulting from the following charts are purely based on geometrical compatibility.

When selecting a gearmotor, refer to procedure specified at paragraph 12 and observe particularly the condition $S \geq f_s$.

(D 56)

		IEC_ 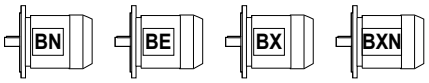 (IM B5)																							
		BN	BE	BX	BXN	BN	BE	BX	BXN	BN	BE	BX	BXN	BN	BE	BX	BXN	BN	BE	BX	BXN	BN	BE	BX	BXN
P_{n1}(#) [kW]	2p	0.37	—	—	—	0.75	—	—	—	1.5	1.1	—	—	2.2	2.2	—	—	4	3	—	—	4	4	—	—
	4p	0.25	0.18	0.25	0.18	0.55	0.37	0.37	0.37	1.1	0.75	0.75	0.75	1.85	1.5	1.5	1.5	3	3	3	3	4	4	4	4
	6p	0.12	—	—	—	0.37	—	—	—	0.75	—	—	—	1.1	0.75	—	—	1.85	1.5	—	—	2.2	2.2	—	—

		P63	P71	P80	P90	P100	P112
F 10 2	i =	7.4_127.1		7.4_91.5		7.4_91.5	
F 20 2		8.7_132.2 ⛀ (14.8_18.1)		6.4_114.3		6.4_114.3	
F 20 3		156.3_545.3		156.3_545.3		156.3_545.3	
F 25 2		9.4_44.4 ⛀ (10.6_13.0)		6.9_44.4		6.9_44.4	
F 25 3		50.8_333.1		45.6_288.1		45.6_288.1	
F 25 4		393.9_1374		393.9_1374		393.9_1374	
F 31 2		18.5_44.6		6.9_44.6		6.9_44.6	
F 31 3		69.1_374.4		47.5_374.4		47.5_374.4	
F 31 4		418.9_1539		418.9_1539		418.9_1539	
F 41 2		24.1_47.9		6.7_47.9		6.7_47.9	
F 41 3		84.9_344.8		51.5_344.8		51.5_344.8	
F 41 4		433.7_1411		433.7_1411		433.7_1411	
F 51 2		30.0_37.1		7.2_37.1		7.2_37.1	
F 51 3		105.1_352.5		48.9_352.5		48.9_352.5	
F 51 4		429.1_1439		429.1_1439		429.1_1439	
F 60 3		98.2_280.7		11.8_280.7 ⛀ (29.6_32.1)		11.8_280.7 ⛀ (29.6_32.1)	
F 60 4		315.4_1141		315.4_1141		315.4_1141	
F 70 3				85.4_196.0		85.4_196.0	
F 70 4		372.5_2188		216.5_2188		216.5_2188	
F 80 3				105.0_200.0		105.0_200.0	
F 80 4		451.5_1987		218.5_1987		218.5_1987	
F 90 3				126.8_194.2		126.8_194.2	
F 90 4		577.5_2099		213.6_2099		213.6_2099	

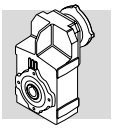

		IEC_ BN BE BX BXN (IM B5)													
		BN	**BE**	**BX**	**BXN**	**BN**	**BE**	**BX**	**BN**	**BE**	**BX**	**BN**	**BX**	**BX**	**BX**
P_{n1}(#) [kW]	**2p**	9.2	9.2	—	—	18.5	18.5	—	22	—	—	30	—	—	—
	4p	9.2	9.2	7.5	7.5	15	15	15	22	22	22	30	30	45	55
	6p	5.5	4	—	—	11	7.5	—	15	—	—	18.5	—	—	—
		P132				**P160**			**P180**			**P200**		**P225**	**P250**
F 10 2	**i =**														
F 20 2															
F 20 3															
F 25 2															
F 25 3															
F 25 4															
F 31 2		6.9_37.7													
F 31 3		47.5_140.7													
F 31 4															
F 41 2		6.7_47.9													
F 41 3		51.5_168.7													
F 41 4															
F 51 2		7.2_37.1				7.2_37.1			7.2_37.1						
F 51 3		48.9_202.4				48.9_202.4			48.9_202.4						
F 51 4															
F 60 3		9.0_201.4				9.0_201.4			9.0_201.4						
F 60 4															
F 70 3		16.3_196.0 ⛀ (27.7_38.4)				10.0_196.0			10.0_196.0			10.0_49.0 ⛀ (20.9_24.6)			
F 70 4		216.5_822.2													
F 80 3		20.3_200.0 ⛀ (28.8_49.1)				12.9_200.0 ⛀ (28.8_31.3)			10.3_200.0			10.3_132.7		10.3_132.7	
F 80 4		218.5_972.0													
F 90 3		25.4_194.2 ⛀ (28.6_62.1)				20.6_194.2 ⛀ (28.6_49.9)			10.3_194.2			10.3_162.8		10.3_162.8	10.3_162.8
F 90 4		213.6_1205				213.6_1205			213.6_1205						

(#) P_{n1} = maximum installable power on input P_

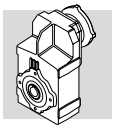

(D 57)

		M	ME	MX	MXN		
		M05 - ME05 - MXN05	M1 - M1 - MXN10	ME2 - MX2 - MXN20	ME3 - MX3	ME4 - MX4	ME5 - MX5
F 10 2		7.4_127.1	7.4_71.1	7.4_91.5	7.4_91.5		
F 20 2		8.7_132.2 ⛔ (14.8_18.1)	8.7_90.4 ⛔ (14.8_18.1)	6.4_114.3	6.4_114.3		
F 20 3		156.3_545.3	156.3_545.3	156.3_545.3	156.3_545.3		
F 25 2		9.4_44.4 ⛔ (10.6_13.0)	9.4_44.4 ⛔ (10.6_13.0)	6.9_44.4	6.9_44.4		
F 25 3		50.8_333.1	50.8_227.8	45.6_288.1	45.6_288.1		
F 25 4		393.9_1374	393.9_1374	393.9_1374	393.9_1374		
F 31 2			18.5_44.6	6.9_44.6	6.9_44.6	6.9_37.7	
F 31 3			69.1_293.8	47.5_374.4	47.5_374.4	47.5_140.7	
F 31 4		418.9_1539	418.9_1539	418.9_1539	418.9_1539		
F 41 2			24.1_47.9	6.7_47.9	6.7_47.9	6.7_47.9	
F 41 3			84.9_344.8	51.5_344.8	51.5_344.8	51.5_168.7	
F 41 4	i =	433.7_1411	433.7_1411	433.7_1411	433.7_1411		
F 51 2			30.0_37.1	7.2_37.1	7.2_37.1	7.2_37.1	7.2_37.1
F 51 3			105.1_352.5	48.9_352.5	48.9_352.5	48.9_202.4	48.9_202.4
F 51 4			429.1_1439	429.1_1439	429.1_1439		
F 60 3				11.8_280.7 ⛔ (29.6_32.1)	11.8_280.7 ⛔ (29.6_32.1)	9_201.4	9_201.4
F 60 4			315.4_1141	315.4_1141	315.4_1141		
F 70 3				85.4_196.0	85.4_196.0	16.3_196.0 ⛔ (27.7_38.4)	16.3_196.0 ⛔ (27.7_38.4)
F 70 4			372.5_2188	216.5_2188	216.5_2188	216.5_822.2	
F 80 3					105.0_200.0	20.3_200.0 ⛔ (28.8_49.1)	20.3_200.0 ⛔ (28.8_49.1)
F 80 4			451.5_1987	218.5_1987	218.5_1987	218.5_972.0	
F 90 3					126.8_194.2	25.4_194.2 ⛔ (28.6_62.1)	25.4_194.2 ⛔ (28.6_62.1)
F 90 4				213.6_2099	213.6_2099	213.6_1205	

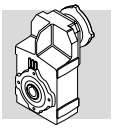

Motor adapters matching the most popular brands of servomotors are available for units size F 10 … F 60. Dimensions of servomotor inputs are provided within the drawing section for each frame size.
The code **SK** applies for inputs featuring a conventional keyway, while through the specification of the **SC** code the input shaft will feature a clamping device instead.

(D 58)

		SERVO INPUT							
		SK60A	SK60B	SK80A	SK80B	SK80C	SK95A	SK95B	SK95C
		SC60A	SC60B	SC80A	SC80B	SC80C	SC95A	SC95B	SC95C
F 10 2		7.4_127.1	7.4_71.1	7.4_71.1		7.4_91.5	7.4_71.1	7.4_91.5	7.4_91.5
F 20 2		8.7_132.2 ⛀ (14.8_18.1)	8.7_90.4 ⛀ (14.8_18.1)	8.7_90.4 ⛀ (14.8_18.1)		6.4_114.3	8.7_90.4 ⛀ (14.8_18.1)	6.4_114.3	6.4_114.3
F 20 3		156.3_545.3	156.3_545.3	156.3_545.3		156.3_545.3	156.3_545.3	156.3_545.3	156.3_545.3
F 25 2		9.4_44.4 ⛀ (10.6_13.0)	9.4_44.4 ⛀ (10.6_13.0)	9.4_44.4 ⛀ (10.6_13.0)		6.9_44.4	9.4_44.4 ⛀ (10.6_13.0)	6.9_44.4	6.9_44.4
F 25 3		45.6_333.1	45.6_227.8	45.6_227.8		45.6_288.1	45.6_227.8	45.6_288.1	45.6_288.1
F 25 4		393.9_1374	393.9_1374	393.9_1374		393.9_1374	393.9_1374	393.9_1374	393.9_1374
F 31 2		18.5_44.6	18.5_44.6	18.5_44.6		6.9_44.6	18.5_44.6	6.9_44.6	6.9_44.6
F 31 3		69.1_374.4	69.1_293.8	69.1_293.8		47.5_374.4	69.1_293.8	47.5_374.4	47.5_374.4
F 31 4	i =	418.9_1539	418.9_1539	418.9_1539		418.9_1539	418.9_1539	418.9_1539	418.9_1539
F 41 2					24.1_47.9	6.7_47.9	24.1_47.9	6.7_47.9	6.7_47.9
F 41 3					84.9_344.8	51.5_344.8	84.9_344.8	51.5_344.8	51.5_344.8
F 41 4		433.7_1411	433.7_1411	433.7_1411		433.7_1411	433.7_1411	433.7_1411	433.7_1411
F 51 2					30.0_37.1	7.2_37.1	30.0_37.1	7.2_37.1	7.2_37.1
F 51 3					105.1_352.5	48.9_352.5	105.1_352.5	48.9_352.5	48.9_352.5
F 51 4						429.1_1439	429.1_1439	429.1_1439	429.1_1439
F 60 3						11.8_280.7 ⛀ (29.6_32.1)	106.4_280.7	11.8_280.7 ⛀ (29.6_32.1)	11.8_280.7 ⛀ (29.6_32.1)
F 60 4					315.4_1141	315.4_1141	315.4_1141	315.4_1141	315.4_1141

(D 59)

		SERVO INPUT					
		SK110A	SK110B	SK130A	SK130B	SK180A	SK180B
		SC110A	SC110B	SC130A	SC130B	SC180A	SC180B
F 10 2		7.4_91.5	7.4_91.5				
F 20 2		6.4_114.3	6.4_114.3				
F 20 3		156.3_545.3	156.3_545.3				
F 25 2		6.9_44.4	6.9_44.4				
F 25 3		45.6_288.1	45.6_288.1				
F 25 4		393.9_1374	393.9_1374				
F 31 2		6.9_44.6	6.9_44.6	6.9_44.6			
F 31 3		47.5_374.4	47.5_374.4	47.5_374.4			
F 31 4	i =	418.9_1539	418.9_1539				
F 41 2		6.7_47.9	6.7_47.9	6.7_47.9	6.7_47.9	6.7_47.9	6.7_47.9
F 41 3		51.5_344.8	51.5_344.8	51.5_344.8	51.5_168.7	51.5_168.7	51.5_168.7
F 41 4		433.7_1411	433.7_1411				
F 51 2		7.2_37.1	7.2_37.1	7.2_37.1	7.2_37.1	7.2_37.1	7.2_37.1
F 51 3		48.9_352.5	48.9_352.5	48.9_352.5	48.9_202.4	48.9_202.4	48.9_202.4
F 51 4		429.1_1439	429.1_1439	429.1_1439			
F 60 3		11.8_280.7 ⛀ (29.6_32.1)	11.8_280.7 ⛀ (29.6_32.1)	11.8_280.7 ⛀ (29.6_32.1)	9.0_201.4	9.0_201.4	9.0_201.4
F 60 4		315.4_1141	315.4_1141	315.4_1141			

63 MOMENT OF INERTIA

The following charts indicate moment of inertia values Jr [kgm²] referred to the gear unit high speed shaft. A key to the symbols used follows:



Values under this icon refer to compact gear units, without motor. To obtain the overall moment of inertia for the gearmotor just add the value of the inertia for the specific compact motor, given in the relevant rating chart.

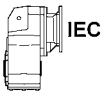

Values under this symbol refer to gearboxes with IEC motor adaptor (IEC size...).



This symbol refers to gearbox values.

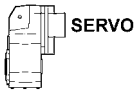

Values under this symbol refer to gear unit with servomotor input adapter.

F 10

	i	J (•10-4) [kgm²]							
			 IEC 63	71	80	90	100	112	
F 10 2_7.4	7.4	1.0	1.8	1.8	3.8	3.7	4.9	4.9	1.7
F 10 2_8.6	8.6	0.77	1.5	1.5	3.6	3.5	4.7	4.7	1.5
F 10 2_9.8	9.8	0.64	1.4	1.4	3.4	3.3	4.5	4.5	1.3
F 10 2_11.5	11.5	0.48	1.2	1.2	3.3	3.2	4.4	4.4	1.2
F 10 2_13.0	13.0	0.38	1.1	1.1	3.2	3.1	4.3	4.3	1.1
F 10 2_14.6	14.6	0.61	1.4	1.4	3.4	3.3	4.5	4.5	1.3
F 10 2_17.0	17.0	0.48	1.3	1.2	3.3	3.2	4.4	4.4	1.2
F 10 2_19.3	19.3	0.41	1.2	1.2	3.2	3.1	4.3	4.3	1.1
F 10 2_22.8	22.8	0.32	1.1	1.1	3.1	3.0	4.2	4.2	1.0
F 10 2_25.8	25.8	0.25	1.0	1.0	3.1	2.9	4.1	4.1	0.93
F 10 2_29.6	29.6	0.19	1.0	0.95	3.0	2.9	4.1	4.1	0.87
F 10 2_33.0	33.0	0.16	0.93	0.92	3.0	2.8	4.1	4.1	0.84
F 10 2_35.3	35.3	0.14	0.92	0.90	3.0	2.8	4.0	4.0	0.83
F 10 2_39.6	39.6	0.12	0.90	0.88	2.9	2.8	4.0	4.0	0.80
F 10 2_44.7	44.7	0.10	0.88	0.86	2.9	2.8	4.0	4.0	0.79
F 10 2_48.7	48.7	0.09	0.86	0.85	2.9	2.8	4.0	4.0	0.77
F 10 2_56.7	56.7	0.07	0.84	0.83	2.9	2.7	4.0	4.0	0.75
F 10 2_63.0	63.0	0.06	0.83	0.82	2.9	2.7	3.9	3.9	0.74
F 10 2_71.1	71.1	0.05	0.82	0.81	2.8	2.7	3.9	3.9	0.73
F 10 2_81.3	81.3	0.04	0.78	0.77	2.8	2.7	3.9	3.9	0.67
F 10 2_91.5	91.5	0.03	0.78	0.76	2.8	2.7	3.9	3.9	0.66
F 10 2_106.0	106.0	0.03	0.77	0.76	—	—	—	—	0.66
F 10 2_127.1	127.1	0.02	0.76	0.75	—	—	—	—	0.65

F 10

	i	J (•10-4) [kgm2]									
		SERVO									
		60A		60B 80A		95A		80C 95B 110A		95C 110B	
		SK	SC	SK	SC	SK	SC	SK	SC	SK	SC
F 10 2_7.4	7.4	1.3	1.5	1.3	1.7	3.8	4.3	3.8	4.3	3.7	4.7
F 10 2_8.6	8.6	1.0	1.3	1.1	1.5	3.6	4.0	3.6	4.1	3.5	4.5
F 10 2_9.8	9.8	0.91	1.2	0.93	1.4	3.5	3.9	3.4	3.9	3.3	4.3
F 10 2_11.5	11.5	0.75	1.0	0.77	1.2	3.3	3.7	3.3	3.8	3.2	4.2
F 10 2_13.0	13.0	0.65	0.91	0.67	1.1	3.2	3.6	3.2	3.7	3.1	4.1
F 10 2_14.6	14.6	0.88	1.1	0.91	1.3	3.4	3.9	3.4	3.9	3.3	4.3
F 10 2_17.0	17.0	0.75	1.0	0.77	1.2	3.3	3.7	3.3	3.8	3.2	4.2
F 10 2_19.3	19.3	0.68	0.94	0.70	1.1	3.2	3.7	3.2	3.7	3.1	4.1
F 10 2_22.8	22.8	0.59	0.85	0.61	1.0	3.1	3.6	3.1	3.6	3.0	4.0
F 10 2_25.8	25.8	0.52	0.78	0.54	0.98	3.1	3.5	3.1	3.6	2.9	3.9
F 10 2_29.6	29.6	0.46	0.72	0.48	0.92	3.0	3.4	3.0	3.5	2.9	3.9
F 10 2_33.0	33.0	0.43	0.69	0.45	0.89	3.0	3.4	3.0	3.5	2.8	3.8
F 10 2_35.3	35.3	0.41	0.67	0.43	0.87	3.0	3.4	3.0	3.5	2.8	3.8
F 10 2_39.6	39.6	0.39	0.65	0.41	0.85	2.9	3.3	2.9	3.4	2.8	3.8
F 10 2_44.7	44.7	0.37	0.63	0.39	0.83	2.9	3.4	2.9	3.4	2.8	3.8
F 10 2_48.7	48.7	0.36	0.62	0.38	0.82	2.9	3.3	2.9	3.4	2.8	3.8
F 10 2_56.7	56.7	0.34	0.60	0.36	0.80	2.9	3.3	2.9	3.4	2.7	3.7
F 10 2_63.0	63.0	0.33	0.59	0.35	0.79	2.9	3.3	2.9	3.4	2.7	3.7
F 10 2_71.1	71.1	0.32	0.58	0.34	0.78	2.9	3.3	2.8	3.3	2.7	3.7
F 10 2_81.3	81.3	0.31	0.57	—	—	—	—	2.8	3.3	2.7	3.7
F 10 2_91.5	91.5	0.30	0.56	—	—	—	—	2.8	3.3	2.7	3.7
F 10 2_106.0	106.0	0.30	0.56	—	—	—	—	—	—	—	—
F 10 2_127.1	127.1	0.29	0.55	—	—	—	—	—	—	—	—

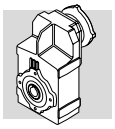

F 20

	i	J (•10-4) [kgm2]							
			IEC						
			63	71	80	90	100	112	
F 20 2_6.4	6.4	2.2	—	—	5.0	4.8	6.0	6.0	3.9
F 20 2_7.8	7.8	1.5	—	—	4.3	4.2	5.4	5.4	3.3
F 20 2_8.7	8.7	1.3	2.0	2.0	4.1	3.9	5.2	5.2	3.0
F 20 2_10.0	10.0	1.0	1.8	1.7	3.8	3.7	4.9	4.9	2.7
F 20 2_11.2	11.2	0.88	1.6	1.6	3.6	3.5	4.7	4.7	2.6
F 20 2_14.8	14.8	1.2	—	—	4.0	3.9	5.1	5.1	2.9
F 20 2_18.1	18.1	0.90	—	—	3.7	3.5	4.7	4.7	2.6
F 20 2_20.2	20.2	0.78	1.5	1.5	3.5	3.4	4.6	4.6	2.5
F 20 2_23.1	23.1	0.64	1.4	1.3	3.4	3.3	4.5	4.5	2.4
F 20 2_25.9	25.9	0.57	1.3	1.3	3.3	3.2	4.4	4.4	2.3
F 20 2_30.4	30.4	0.41	1.1	1.1	3.2	3.0	4.3	4.3	2.1
F 20 2_33.1	33.1	0.36	1.1	1.1	3.1	3.0	4.2	4.2	2.1
F 20 2_37.9	37.9	0.30	1.0	1.0	3.1	2.9	4.1	4.1	2.0
F 20 2_41.8	41.8	0.27	1.0	1.0	3.0	2.9	4.1	4.1	2.0
F 20 2_44.8	44.8	0.24	1.0	1.0	3.0	2.9	4.1	4.1	2.0
F 20 2_50.7	50.7	0.21	0.93	0.92	3.0	2.8	4.1	4.1	1.9
F 20 2_56.7	56.7	0.18	0.91	0.90	2.9	2.8	4.0	4.0	1.9
F 20 2_61.9	61.9	0.16	0.89	0.88	2.9	2.8	4.0	4.0	1.9
F 20 2_69.1	69.1	0.14	0.87	0.86	2.9	2.8	4.0	4.0	1.8
F 20 2_76.8	76.8	0.12	0.86	0.85	2.9	2.8	4.0	4.0	1.8
F 20 2_90.4	90.4	0.10	0.84	0.82	2.9	2.7	3.9	3.9	1.8
F 20 2_101.6	101.6	0.09	0.80	0.79	2.8	2.7	3.9	3.9	1.8
F 20 2_114.3	114.3	0.08	0.79	0.77	2.8	2.7	3.9	3.9	1.8
F 20 2_132.2	132.2	0.03	0.78	0.77	—	—	—	—	1.8
F 20 3_156.3	156.3	0.04	0.81	0.80	2.8	2.7	3.9	3.9	0.72
F 20 3_172.6	172.6	0.04	0.81	0.80	2.8	2.7	3.9	3.9	0.72
F 20 3_184.9	184.9	0.04	0.81	0.80	2.8	2.7	3.9	3.9	0.72
F 20 3_209.3	209.3	0.03	0.81	0.79	2.8	2.7	3.9	3.9	0.72
F 20 3_234.0	234.0	0.03	0.81	0.79	2.8	2.7	3.9	3.9	0.71
F 20 3_255.3	255.3	0.03	0.80	0.79	2.8	2.7	3.9	3.9	0.71
F 20 3_285.2	285.2	0.03	0.80	0.79	2.8	2.7	3.9	3.9	0.71
F 20 3_316.9	316.9	0.03	0.80	0.79	2.8	2.7	3.9	3.9	0.71
F 20 3_372.9	372.9	0.03	0.80	0.79	2.8	2.7	3.9	3.9	0.71
F 20 3_419.3	419.3	0.03	0.80	0.79	2.8	2.7	3.9	3.9	0.66
F 20 3_471.7	471.7	0.03	0.80	0.79	2.8	2.7	3.9	3.9	0.66
F 20 3_545.3	545.3	0.03	0.80	0.79	2.8	2.7	3.9	3.9	0.66

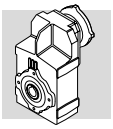

F 20

	i	J (•10-4) [kgm2]									
		SERVO									
		60A		60B 80A		95A		80C 95B 110A		95C 110B	
		SK	SC	SK	SC	SK	SC	SK	SC	SK	SC
F 20 2_6.4	6.4	—	—	—	—	—	—	5.0	5.5	4.8	5.8
F 20 2_7.8	7.8	—	—	—	—	—	—	4.3	4.8	4.2	5.2
F 20 2_8.7	8.7	1.6	1.8	1.6	2.0	4.1	4.6	4.1	4.6	3.9	4.9
F 20 2_10.0	10.0	1.3	1.5	1.3	1.7	3.8	4.3	3.8	4.3	3.7	4.7
F 20 2_11.2	11.2	1.2	1.4	1.2	1.6	3.7	4.1	3.6	4.1	3.5	4.5
F 20 2_14.8	14.8	—	—	—	—	—	—	4.0	4.5	3.9	4.9
F 20 2_18.1	18.1	—	—	—	—	—	—	3.7	4.2	3.5	4.5
F 20 2_20.2	20.2	1.1	1.3	1.1	1.5	3.6	4.0	3.5	4.0	3.4	4.4
F 20 2_23.1	23.1	0.91	1.2	0.93	1.4	3.5	3.9	3.4	3.9	3.3	4.3
F 20 2_25.9	25.9	0.84	1.1	0.86	1.3	3.4	3.8	3.3	3.8	3.2	4.2
F 20 2_30.4	30.4	0.68	0.94	0.70	1.1	3.2	3.7	3.2	3.7	3.0	4.0
F 20 2_33.1	33.1	0.63	0.89	0.65	1.1	3.2	3.6	3.1	3.6	3.0	4.0
F 20 2_37.9	37.9	0.47	0.83	0.59	1.0	3.1	3.6	3.1	3.6	2.9	3.9
F 20 2_41.8	41.8	0.44	0.80	0.56	1.0	3.1	3.5	3.0	3.5	2.9	3.9
F 20 2_44.8	44.8	0.41	0.77	0.53	0.97	3.1	3.5	3.0	3.5	2.9	3.9
F 20 2_50.7	50.7	0.48	0.74	0.50	0.94	3.0	3.5	3.0	3.5	2.8	3.8
F 20 2_56.7	56.7	0.45	0.71	0.47	0.91	3.0	3.4	2.9	3.4	2.8	3.8
F 20 2_61.9	61.9	0.43	0.69	0.45	0.89	3.0	3.4	2.9	3.4	2.8	3.8
F 20 2_69.1	69.1	0.41	0.67	0.43	0.87	3.0	3.4	2.9	3.4	2.8	3.8
F 20 2_76.8	76.8	0.39	0.65	0.41	0.85	2.9	3.4	2.9	3.4	2.8	3.8
F 20 2_90.4	90.4	0.37	0.63	0.39	0.83	2.9	3.4	2.9	3.4	2.7	3.7
F 20 2_101.6	101.6	0.36	0.62	—	—	—	—	2.8	3.3	2.7	3.7
F 20 2_114.3	114.3	0.35	0.61	—	—	—	—	2.8	3.3	2.7	3.7
F 20 2_132.2	132.2	0.30	0.56	—	—	—	—	—	—	—	—
F 20 3_156.3	156.3	0.31	0.57	0.33	0.77	2.9	3.3	2.8	3.3	2.7	3.7
F 20 3_172.6	172.6	0.31	0.57	0.33	0.77	2.9	3.3	2.8	3.3	2.7	3.7
F 20 3_184.9	184.9	0.31	0.57	0.33	0.77	2.9	3.3	2.8	3.3	2.7	3.7
F 20 3_209.3	209.3	0.30	0.56	0.32	0.76	2.9	3.3	2.8	3.3	2.7	3.7
F 20 3_234.0	234.0	0.30	0.56	0.32	0.76	2.9	3.3	2.8	3.3	2.7	3.7
F 20 3_255.3	255.3	0.30	0.56	0.32	0.76	2.9	3.3	2.8	3.3	2.7	3.7
F 20 3_285.2	285.2	0.30	0.56	0.32	0.76	2.9	3.3	2.8	3.3	2.7	3.7
F 20 3_316.9	316.9	0.30	0.56	0.32	0.76	2.9	3.3	2.8	3.3	2.7	3.7
F 20 3_372.9	372.9	0.30	0.56	0.32	0.76	2.9	3.3	2.8	3.3	2.7	3.7
F 20 3_419.3	419.3	0.30	0.56	0.32	0.76	2.9	3.3	2.8	3.3	2.7	3.7
F 20 3_471.7	471.7	0.30	0.56	0.32	0.76	2.9	3.3	2.8	3.3	2.7	3.7
F 20 3_545.3	545.3	0.30	0.56	0.32	0.76	2.9	3.3	2.8	3.3	2.7	3.7

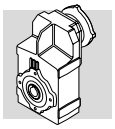

F 25

	i	J (•10-4) [kgm2]							
			IEC						
			63	71	80	90	100	112	
F 25 2_6.9	6.9	2.7	—	—	5.4	5.3	6.5	6.5	4.4
F 25 2_8.4	8.4	1.9	—	—	4.6	4.5	5.7	5.7	3.6
F 25 2_9.4	9.4	1.6	2.3	2.3	4.3	4.2	5.4	5.4	3.3
F 25 2_10.6	10.6	1.9	—	—	4.6	4.5	5.7	5.7	3.6
F 25 2_13.0	13.0	1.3	—	—	4.1	4.0	5.2	5.2	3.0
F 25 2_14.5	14.5	1.1	1.8	1.8	3.9	3.8	5.0	5.0	2.8
F 25 2_16.6	16.6	0.90	1.6	1.6	3.7	3.5	4.7	4.7	2.6
F 25 2_18.6	18.6	0.77	1.5	1.5	3.5	3.4	4.6	4.6	2.5
F 25 2_21.8	21.8	0.57	1.3	1.3	3.3	3.2	4.4	4.4	2.3
F 25 2_23.8	23.8	0.48	1.2	1.2	3.2	3.1	4.3	4.3	2.2
F 25 2_27.2	27.2	0.40	1.1	1.1	3.2	3.0	4.2	4.2	2.1
F 25 2_30.0	30.0	0.35	1.1	1.1	3.1	3.0	4.2	4.2	2.1
F 25 2_32.2	32.2	0.31	1.0	1.0	3.1	2.9	4.2	4.2	2.0
F 25 2_36.4	36.4	0.26	1.0	1.0	3.0	2.9	4.1	4.1	2.0
F 25 2_40.7	40.7	0.22	1.0	0.94	3.0	2.9	4.1	4.1	1.9
F 25 2_44.4	44.4	0.20	0.93	0.92	3.0	2.8	4.0	4.0	1.9
F 25 3_45.6	45.6	0.79	—	—	3.6	3.4	4.6	4.6	2.5
F 25 3_50.8	50.8	0.70	1.4	1.4	3.5	3.3	4.5	4.5	2.4
F 25 3_58.3	58.3	0.58	1.3	1.3	3.3	3.2	4.4	4.4	2.3
F 25 3_65.3	65.3	0.52	1.2	1.2	3.3	3.1	4.4	4.4	2.2
F 25 3_76.6	76.6	0.38	1.1	1.1	3.1	3.0	4.2	4.2	2.1
F 25 3_83.4	83.4	0.32	1.0	1.0	3.1	3.0	4.2	4.2	2.0
F 25 3_95.5	95.5	0.28	1.0	1.0	3.0	2.9	4.1	4.1	2.0
F 25 3_105.4	105.4	0.25	1.0	1.0	3.0	2.9	4.1	4.1	2.0
F 25 3_113.0	113.0	0.23	0.95	0.94	3.0	2.9	4.1	4.1	1.9
F 25 3_127.8	127.8	0.20	0.92	0.91	3.0	2.8	4.0	4.0	1.9
F 25 3_143.0	143.0	0.17	0.90	0.89	2.9	2.8	4.0	4.0	1.9
F 25 3_155.9	155.9	0.15	0.88	0.87	2.9	2.8	4.0	4.0	1.9
F 25 3_174.2	174.2	0.13	0.87	0.86	2.9	2.8	4.0	4.0	1.8
F 25 3_193.6	193.6	0.12	0.85	0.84	2.9	2.7	4.0	4.0	1.8
F 25 3_227.8	227.8	0.10	0.83	0.82	2.9	2.7	3.9	3.9	1.8
F 25 3_256.1	256.1	0.09	0.79	0.78	2.8	2.7	3.9	3.9	1.8
F 25 3_288.1	288.1	0.08	0.78	0.77	2.8	2.7	3.9	3.9	1.8
F 25 3_333.1	333.1	0.03	0.78	0.76	—	—	—	—	1.8
F 25 4_393.9	393.9	0.02	0.80	0.78	2.8	2.7	3.9	3.9	0.70
F 25 4_434.9	434.9	0.02	0.79	0.78	2.8	2.7	3.9	3.9	0.70
F 25 4_466.0	466.0	0.02	0.79	0.78	2.8	2.7	3.9	3.9	0.70
F 25 4_527.3	527.3	0.02	0.79	0.78	2.8	2.7	3.9	3.9	0.70
F 25 4_589.7	589.7	0.02	0.79	0.78	2.8	2.7	3.9	3.9	0.70
F 25 4_643.3	643.3	0.02	0.79	0.78	2.8	2.7	3.9	3.9	0.70
F 25 4_718.7	718.7	0.02	0.79	0.78	2.8	2.7	3.9	3.9	0.70
F 25 4_798.5	798.5	0.01	0.79	0.77	2.8	2.7	3.9	3.9	0.70
F 25 4_939.8	939.8	0.01	0.79	0.77	2.8	2.7	3.9	3.9	0.69
F 25 4_1057	1057	0.01	0.79	0.77	2.8	2.7	3.9	3.9	0.64
F 25 4_1189	1189	0.01	0.78	0.77	2.8	2.7	3.9	3.9	0.64
F 25 4_1374	1374	0.01	0.78	0.77	2.8	2.7	3.9	3.9	0.64

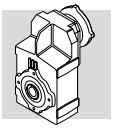

F 25

	i	J (•10-4) [kgm2]									
		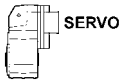 SERVO									
		60A		60B 80A		95A		80C 95B 110A		95C 110B	
		SK	SC	SK	SC	SK	SC	SK	SC	SK	SC
F 25 2_6.9	6.9	—	—	—	—	—	—	5.4	5.9	5.3	6.3
F 25 2_8.4	8.4	—	—	—	—	—	—	4.6	5.1	4.5	5.5
F 25 2_9.4	9.4	1.9	2.1	1.9	2.3	4.4	4.9	4.3	4.8	4.2	5.2
F 25 2_10.6	10.6	—	—	—	—	—	—	4.6	5.1	4.5	5.5
F 25 2_13.0	13.0	—	—	—	—	—	—	4.1	4.6	4.0	5.0
F 25 2_14.5	14.5	1.4	1.6	1.4	1.8	3.9	4.4	3.9	4.4	3.8	4.8
F 25 2_16.6	16.6	1.2	1.4	1.2	1.6	3.7	4.2	3.7	4.2	3.5	4.5
F 25 2_18.6	18.6	1.0	1.3	1.1	1.5	3.6	4.0	3.5	4.0	3.4	4.4
F 25 2_21.8	21.8	0.84	1.1	0.86	1.3	3.4	3.8	3.3	3.8	3.2	4.2
F 25 2_23.8	23.8	0.75	1.0	0.77	1.2	3.3	3.7	3.2	3.7	3.1	4.1
F 25 2_27.2	27.2	0.67	0.93	0.69	1.1	3.2	3.7	3.2	3.7	3.0	4.0
F 25 2_30.0	30.0	0.62	0.88	0.64	1.1	3.2	3.6	3.1	3.6	3.0	4.0
F 25 2_32.2	32.2	0.58	0.84	1.4	1.8	3.1	3.6	3.1	3.6	2.9	3.9
F 25 2_36.4	36.4	0.53	0.79	0.55	0.99	3.1	3.5	3.0	3.5	2.9	3.9
F 25 2_40.7	40.7	0.49	0.75	0.51	0.95	3.0	3.5	3.0	3.5	2.9	3.9
F 25 2_44.4	44.4	0.47	0.73	0.49	0.93	3.0	3.5	3.0	3.5	2.8	3.8
F 25 3_45.6	45.6	1.1	1.3	1.1	1.5	3.6	4.0	3.6	4.1	3.4	4.4
F 25 3_50.8	50.8	0.97	1.2	0.99	1.4	3.5	4.0	3.5	4.0	3.3	4.3
F 25 3_58.3	58.3	0.85	1.1	0.87	1.3	3.4	3.8	3.3	3.8	3.2	4.2
F 25 3_65.3	65.3	0.79	1.1	0.84	1.2	3.3	3.8	3.3	3.8	3.1	4.1
F 25 3_76.6	76.6	0.65	0.91	0.67	1.1	3.2	3.6	3.1	3.6	3.0	4.0
F 25 3_83.4	83.4	0.59	0.85	0.61	1.0	3.1	3.6	3.1	3.6	3.0	4.0
F 25 3_95.5	95.5	0.55	0.81	0.57	1.0	3.1	3.5	3.0	3.5	2.9	3.9
F 25 3_105.4	105.4	0.52	0.78	0.54	0.98	3.1	3.5	3.0	3.5	2.9	3.9
F 25 3_113.0	113.0	0.50	0.76	0.52	0.96	3.1	3.5	3.0	3.5	2.9	3.9
F 25 3_127.8	127.8	0.47	0.73	0.49	0.93	3.0	3.5	3.0	3.5	2.8	3.8
F 25 3_143.0	143.0	0.44	0.70	0.46	0.90	3.0	3.4	2.9	3.4	2.8	3.8
F 25 3_155.9	155.9	0.42	0.68	0.44	0.88	3.0	3.4	2.9	3.4	2.8	3.8
F 25 3_174.2	174.2	0.40	0.66	0.42	0.86	3.0	3.4	2.9	3.4	2.8	3.8
F 25 3_193.6	193.6	0.39	0.65	0.41	0.85	2.9	3.4	2.9	3.4	2.7	3.7
F 25 3_227.8	227.8	0.37	0.63	0.39	0.83	2.9	3.4	2.9	3.4	2.7	3.7
F 25 3_256.1	256.1	0.36	0.62	—	—	—	—	2.8	3.3	2.7	3.7
F 25 3_288.1	288.1	0.35	0.61	—	—	—	—	2.8	3.3	2.7	3.7
F 25 3_333.1	333.1	0.30	0.56	—	—	—	—	—	—	—	—
F 25 4_393.9	393.9	0.29	0.55	0.31	0.75	2.8	3.3	2.8	3.3	2.7	3.7
F 25 4_434.9	434.9	0.29	0.55	0.31	0.75	2.8	3.3	2.8	3.3	2.7	3.7
F 25 4_466.0	466.0	0.29	0.55	0.31	0.75	2.8	3.3	2.8	3.3	2.7	3.7
F 25 4_527.3	527.3	0.29	0.55	0.31	0.75	2.8	3.3	2.8	3.3	2.7	3.7
F 25 4_589.7	589.7	0.29	0.55	0.31	0.75	2.8	3.3	2.8	3.3	2.7	3.7
F 25 4_643.3	643.3	0.29	0.55	0.31	0.75	2.8	3.3	2.8	3.3	2.7	3.7
F 25 4_718.7	718.7	0.29	0.55	0.31	0.75	2.8	3.3	2.8	3.3	2.7	3.7
F 25 4_798.5	798.5	0.28	0.54	0.30	0.74	2.8	3.3	2.8	3.3	2.7	3.7
F 25 4_939.8	939.8	0.28	0.54	0.30	0.74	2.8	3.3	2.8	3.3	2.7	3.7
F 25 4_1057	1057	0.28	0.54	0.30	0.74	2.8	3.3	2.8	3.3	2.7	3.7
F 25 4_1189	1189	0.28	0.54	0.30	0.74	2.8	3.3	2.8	3.3	2.7	3.7
F 25 4_1374	1374	0.28	0.54	0.30	0.74	2.8	3.3	2.8	3.3	2.7	3.7

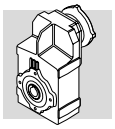

F 31

	i	J (•10-4) [kgm2]								
			IEC							
			63	71	80	90	100	112	132	
F 31 2_6.9	6.9	5.0	—	—	7.8	7.6	8.9	8.9	22	7.1
F 31 2_8.2	8.2	3.7	—	—	6.5	6.3	7.5	7.5	20	5.8
F 31 2_9.0	9.0	3.2	—	—	6.0	5.8	7.0	7.0	20	5.3
F 31 2_10.7	10.7	3.5	—	—	6.3	6.2	7.4	7.4	20	5.6
F 31 2_12.7	12.7	2.6	—	—	5.4	5.3	6.5	6.5	19	4.7
F 31 2_13.9	13.9	2.3	—	—	5.1	4.9	6.2	6.2	19	4.4
F 31 2_16.8	16.8	1.8	—	—	4.6	4.4	5.6	5.6	18	3.9
F 31 2_18.5	18.5	1.5	2.2	2.2	4.2	4.1	5.3	5.3	18	3.5
F 31 2_21.1	21.1	1.1	1.8	1.8	3.9	3.7	5.0	5.0	18	3.2
F 31 2_23.4	23.4	1.0	1.7	1.7	3.7	3.6	4.8	4.8	18	3.0
F 31 2_27.3	27.3	0.78	1.5	1.5	3.5	3.4	4.6	4.6	17	2.8
F 31 2_30.1	30.1	0.65	1.4	1.4	3.4	3.3	4.5	4.5	17	2.7
F 31 2_34.4	34.4	0.53	1.3	1.2	3.3	3.2	4.4	4.4	17	2.6
F 31 2_37.7	37.7	0.47	1.2	1.2	3.2	3.1	4.3	4.3	17	2.5
F 31 2_40.4	40.4	0.42	1.1	1.1	3.2	3.0	4.3	4.3	—	2.5
F 31 2_44.6	44.6	0.37	1.1	1.1	3.1	3.0	4.2	4.2	—	2.4
F 31 3_47.5	47.5	1.6	—	—	4.3	4.2	5.4	5.4	18	3.6
F 31 3_52.1	52.1	1.4	—	—	4.2	4.0	5.3	5.3	18	3.5
F 31 3_62.8	62.8	1.2	—	—	3.9	3.8	5.0	5.0	18	3.2
F 31 3_69.1	69.1	1.0	1.7	1.7	3.7	3.6	4.8	4.8	18	3.0
F 31 3_78.9	78.9	0.72	1.4	1.4	3.5	3.4	4.6	4.6	17	2.8
F 31 3_87.4	87.4	0.66	1.4	1.4	3.4	3.3	4.5	4.5	17	2.7
F 31 3_101.9	101.9	0.54	1.3	1.2	3.3	3.2	4.4	4.4	17	2.6
F 31 3_112.5	112.5	0.46	1.2	1.2	3.2	3.1	4.3	4.3	17	2.5
F 31 3_128.4	128.4	0.38	1.1	1.1	3.1	3.0	4.2	4.2	17	2.4
F 31 3_140.7	140.7	0.35	1.1	1.1	3.1	3.0	4.2	4.2	17	2.4
F 31 3_150.8	150.8	0.31	1.0	1.0	3.1	2.9	4.2	4.2	—	2.4
F 31 3_166.8	166.8	0.28	1.0	1.0	3.0	2.9	4.1	4.1	—	2.3
F 31 3_185.4	185.4	0.24	1.0	1.0	3.0	2.9	4.1	4.1	—	2.3
F 31 3_202.3	202.3	0.21	0.94	0.93	3.0	2.8	4.1	4.1	—	2.3
F 31 3_228.2	228.2	0.18	0.92	0.90	2.9	2.8	4.0	4.0	—	2.2
F 31 3_253.6	253.6	0.16	0.89	0.88	2.9	2.8	4.0	4.0	—	2.2
F 31 3_293.8	293.8	0.13	0.86	0.85	2.9	2.8	4.0	4.0	—	2.2
F 31 3_332.8	332.8	0.11	0.82	0.81	2.9	2.7	4.0	4.0	—	2.2
F 31 3_374.4	374.4	0.10	0.81	0.79	2.9	2.7	3.9	3.9	—	2.2
F 31 4_418.9	418.9	0.09	0.86	0.85	2.9	2.8	3.9	3.9	—	0.77
F 31 4_462.6	462.6	0.08	0.86	0.84	2.9	2.7	3.9	3.9	—	0.77
F 31 4_527.8	527.8	0.08	0.85	0.84	2.9	2.7	3.9	3.9	—	0.76
F 31 4_578.6	578.6	0.08	0.85	0.84	2.9	2.7	3.9	3.9	—	0.76
F 31 4_619.9	619.9	0.07	0.85	0.83	2.9	2.7	3.9	3.9	—	0.76
F 31 4_685.6	685.6	0.07	0.85	0.83	2.9	2.7	3.9	3.9	—	0.76
F 31 4_762.3	762.3	0.07	0.84	0.83	2.9	2.7	3.9	3.9	—	0.75
F 31 4_831.6	831.6	0.07	0.84	0.83	2.9	2.7	3.9	3.9	—	0.75
F 31 4_938.2	938.2	0.07	0.84	0.83	2.9	2.7	3.9	3.9	—	0.75
F 31 4_1042	1042	0.07	0.84	0.83	2.9	2.7	3.9	3.9	—	0.75
F 31 4_1208	1208	0.06	0.84	0.82	2.9	2.7	3.9	3.9	—	0.75
F 31 4_1368	1368	0.06	0.84	0.82	2.9	2.7	3.9	3.9	—	0.75
F 31 4_1539	1539	0.06	0.84	0.82	2.9	2.7	3.9	3.9	—	0.75

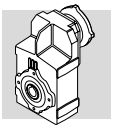

F 31

	i	J (•10-4) [kgm2]											
		SERVO											
		60A		60B 80A		95A		80C 95B 110A		95C 110B		130A	
		SK	SC	SK	SC	SK	SC	SK	SC	SK	SC	SK	SC
F 31 2_6.9	6.9	—	—	—	—	—	—	7.8	8.3	7.6	8.6	7.6	8.6
F 31 2_8.2	8.2	—	—	—	—	—	—	6.5	7.0	6.3	7.3	6.3	7.3
F 31 2_9.0	9.0	—	—	—	—	—	—	6.0	6.5	5.8	6.8	5.8	6.8
F 31 2_10.7	10.7	—	—	—	—	—	—	6.3	6.8	6.2	7.2	6.2	7.2
F 31 2_12.7	12.7	—	—	—	—	—	—	5.4	5.9	5.3	6.3	5.3	6.3
F 31 2_13.9	13.9	—	—	—	—	—	—	5.1	5.6	4.9	5.9	4.9	5.9
F 31 2_16.8	16.8	—	—	—	—	—	—	4.6	5.1	4.4	5.4	4.4	5.4
F 31 2_18.5	18.5	1.8	2.0	1.8	2.2	4.3	4.8	4.2	4.7	4.1	5.1	4.1	5.1
F 31 2_21.1	21.1	1.4	1.6	1.4	1.8	3.9	4.3	3.9	4.4	3.7	4.7	3.7	4.7
F 31 2_23.4	23.4	1.3	1.5	1.3	1.7	3.8	4.3	3.7	4.2	3.6	4.6	3.6	4.6
F 31 2_27.3	27.3	1.1	1.3	1.1	1.5	3.6	4.0	3.5	4.0	3.4	4.4	3.4	4.4
F 31 2_30.1	30.1	0.92	1.2	0.94	1.4	3.5	3.9	3.4	3.9	3.3	4.3	3.3	4.3
F 31 2_34.4	34.4	0.80	1.1	0.82	1.3	3.4	3.8	3.3	3.8	3.2	4.2	3.2	4.2
F 31 2_37.7	37.7	0.74	1.0	0.76	1.2	3.3	3.7	3.2	3.7	3.1	4.1	3.1	4.1
F 31 2_40.4	40.4	0.69	0.95	0.71	1.1	3.2	3.7	3.2	3.7	3.0	4.0	3.0	4.0
F 31 2_44.6	44.6	0.64	0.90	0.66	1.1	3.2	3.6	3.1	3.6	3.0	4.0	3.0	4.0
F 31 3_47.5	47.5	—	—	—	—	—	—	4.3	4.8	4.2	5.2	4.2	5.2
F 31 3_52.1	52.1	—	—	—	—	—	—	4.2	4.7	4.0	5.0	4.0	5.0
F 31 3_62.8	62.8	—	—	—	—	—	—	3.9	4.4	3.8	4.8	3.8	4.8
F 31 3_69.1	69.1	1.3	1.5	1.3	1.7	3.8	4.3	3.7	4.2	3.6	4.6	3.6	4.6
F 31 3_78.9	78.9	0.99	1.3	1.0	1.4	3.5	4.0	3.5	4.0	3.4	4.4	3.4	4.4
F 31 3_87.4	87.4	0.93	1.2	0.95	1.4	3.5	3.9	3.4	3.9	3.3	4.3	3.3	4.3
F 31 3_101.9	101.9	0.81	1.1	0.83	1.3	3.4	3.8	3.3	3.8	3.2	4.2	3.2	4.2
F 31 3_112.5	112.5	0.73	0.99	0.75	1.2	3.3	3.7	3.2	3.7	3.1	4.1	3.1	4.1
F 31 3_128.4	128.4	0.65	0.91	0.67	1.1	3.2	3.6	3.1	3.6	3.0	4.0	3.0	4.0
F 31 3_140.7	140.7	0.62	0.88	0.64	1.1	3.2	3.6	3.1	3.6	3.0	4.0	3.0	4.0
F 31 3_150.8	150.8	0.58	0.84	0.60	1.0	3.1	3.6	3.1	3.6	2.9	3.9	2.9	3.9
F 31 3_166.8	166.8	0.55	0.81	0.57	1.0	3.1	3.5	3.0	3.5	2.9	3.9	2.9	3.9
F 31 3_185.4	185.4	0.51	0.77	0.53	0.97	3.1	3.5	3.0	3.5	2.9	3.9	2.9	3.9
F 31 3_202.3	202.3	0.48	0.74	0.50	0.93	3.0	3.5	3.0	3.5	2.8	3.8	2.8	3.8
F 31 3_228.2	228.2	0.45	0.71	0.47	0.91	3.0	3.4	2.9	3.4	2.8	3.8	2.8	3.8
F 31 3_253.6	253.6	0.43	0.69	0.45	0.89	3.0	3.4	2.9	3.4	2.8	3.8	2.8	3.8
F 31 3_293.8	293.8	0.40	0.66	0.42	0.86	3.0	3.4	2.9	3.4	2.8	3.8	2.8	3.8
F 31 3_332.8	332.8	0.38	0.64	—	—	—	—	2.9	3.4	2.7	3.7	2.7	3.7
F 31 3_374.4	374.4	0.37	0.63	—	—	—	—	2.9	3.4	2.7	3.7	2.7	3.7
F 31 4_418.9	418.9	0.36	0.62	0.38	0.82	2.9	3.3	2.9	3.4	2.8	3.8	—	—
F 31 4_462.6	462.6	0.35	0.61	0.37	0.81	2.9	3.3	2.9	3.4	2.7	3.7	—	—
F 31 4_527.8	527.8	0.35	0.61	0.37	0.81	2.9	3.3	2.9	3.4	2.7	3.7	—	—
F 31 4_578.6	578.6	0.35	0.61	0.37	0.81	2.9	3.3	2.9	3.4	2.7	3.7	—	—
F 31 4_619.9	619.9	0.34	0.60	0.36	0.80	2.9	3.3	2.9	3.4	2.7	3.7	—	—
F 31 4_685.6	685.6	0.34	0.60	0.36	0.80	2.9	3.3	2.9	3.4	2.7	3.7	—	—
F 31 4_762.3	762.3	0.34	0.60	0.36	0.80	2.9	3.3	2.9	3.4	2.7	3.7	—	—
F 31 4_831.6	831.6	0.34	0.60	0.36	0.80	2.9	3.3	2.9	3.4	2.7	3.7	—	—
F 31 4_938.2	938.2	0.34	0.60	0.36	0.80	2.9	3.3	2.9	3.4	2.7	3.7	—	—
F 31 4_1042	1042	0.34	0.60	0.36	0.80	2.9	3.3	2.9	3.4	2.7	3.7	—	—
F 31 4_1208	1208	0.33	0.59	0.35	0.79	2.9	3.3	2.9	3.4	2.7	3.7	—	—
F 31 4_1368	1368	0.33	0.59	0.35	0.79	2.9	3.3	2.9	3.4	2.7	3.7	—	—
F 31 4_1539	1539	0.83	0.59	0.35	0.79	2.9	3.3	2.9	3.4	2.7	3.7	—	—

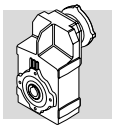

F 41

	i	J (•10-4) [kgm2]								
			IEC							
			63	71	80	90	100	112	132	
F 41 2_6.7	6.7	12	—	—	15	15	18	18	29	21
F 41 2_9.1	9.1	7.2	—	—	10	9.8	13	13	24	16
F 41 2_10.8	10.8	8.0	—	—	11	11	13	13	25	17
F 41 2_14.6	14.6	5.0	—	—	7.7	7.6	10	10	21	14
F 41 2_17.1	17.1	3.5	—	—	6.3	6.2	8.9	8.9	20	12
F 41 2_18.9	18.9	3.1	—	—	5.8	5.7	8.5	8.5	20	12
F 41 2_24.1	24.1	2.1	2.8	2.8	4.9	4.8	7.5	7.5	19	11
F 41 2_30.1	30.1	1.5	2.2	2.2	4.3	4.2	6.9	6.9	18	10
F 41 2_38.2	38.2	0.95	1.7	1.7	3.7	3.6	6.3	6.3	17	9.7
F 41 2_47.9	47.9	0.67	1.4	1.4	3.4	3.3	6.0	6.0	17	9.5
F 41 3_51.5	51.5	3.0	—	—	5.7	5.6	8.4	8.4	19	12
F 41 3_60.2	60.2	2.1	—	—	4.9	4.7	7.5	7.5	19	11
F 41 3_66.5	66.5	1.9	—	—	4.7	4.5	7.3	7.3	18	11
F 41 3_84.9	84.9	1.4	2.1	2.1	4.2	4.0	6.8	6.8	18	10
F 41 3_106.0	106.0	1.1	1.8	1.7	3.8	3.7	6.4	6.4	18	9.8
F 41 3_134.4	134.4	0.66	1.4	1.4	3.4	3.3	6.0	6.0	17	9.4
F 41 3_168.7	168.7	0.49	1.2	1.2	3.2	3.1	5.9	5.9	17	9.3
F 41 3_180.7	180.7	0.43	1.1	1.1	3.2	3.1	5.8	5.8	—	9.2
F 41 3_198.9	198.9	0.39	1.1	1.1	3.1	3.0	5.8	5.8	—	9.2
F 41 3_220.1	220.1	0.36	1.1	1.1	3.1	3.0	5.7	5.7	—	9.1
F 41 3_240.1	240.1	0.31	1.0	1.0	3.1	2.9	5.7	5.7	—	9.1
F 41 3_266.9	266.9	0.28	1.0	1.0	3.0	2.9	5.7	5.7	—	9.1
F 41 3_296.6	296.6	0.23	1.0	1.0	3.0	2.9	5.6	5.6	—	9.0
F 41 3_344.8	344.8	0.19	0.92	0.91	2.9	2.8	5.6	5.6	—	9.0
F 41 4_433.7	433.7	0.21	0.94	0.93	3.0	2.8	4.1	4.1	—	1.9
F 41 4_549.8	549.8	0.19	0.92	0.90	2.9	2.8	4.0	4.0	—	1.9
F 41 4_690.1	690.1	0.18	0.91	0.89	2.9	2.8	4.0	4.0	—	1.9
F 41 4_739.4	739.4	0.17	0.90	0.89	2.9	2.8	4.0	4.0	—	1.9
F 41 4_813.8	813.8	0.17	0.90	0.89	2.9	2.8	4.0	4.0	—	1.9
F 41 4_900.5	900.5	0.17	0.90	0.89	2.9	2.8	4.0	4.0	—	1.9
F 41 4_982.4	982.4	0.17	0.90	0.88	2.9	2.8	4.0	4.0	—	1.9
F 41 4_1092	1092	0.16	0.89	0.88	2.9	2.8	4.0	4.0	—	1.9
F 41 4_1213	1213	0.16	0.89	0.88	2.9	2.8	4.0	4.0	—	1.9
F 41 4_1411	1411	0.16	0.89	0.88	2.9	2.8	4.0	4.0	—	1.9

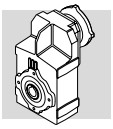

F 41

	i	J (•10-4) [kgm2]																	
		SERVO																	
		60A		60B 80A		80B		95A		80C 95B 110A		95C 110B		130A		130B 180A		180B	
		SK	SC	SK	SC	SK	SC	SK	SC	SK	SC	SK	SC	SK	SC	SK	SC	SK	SC
F 41 2_6.7	6.7	—	—	—	—	—	—	—	—	15	16	15	16	15	16	29	31	29	34
F 41 2_9.1	9.1	—	—	—	—	—	—	—	—	10	11	9.8	11	9.8	11	24	27	24	29
F 41 2_10.8	10.8	—	—	—	—	—	—	—	—	11	12	11	12	11	12	25	27	25	30
F 41 2_14.6	14.6	—	—	—	—	—	—	—	—	7.7	8.2	7.6	8.6	7.6	8.6	22	24	21	26
F 41 2_17.1	17.1	—	—	—	—	—	—	—	—	6.3	6.8	6.2	7.2	6.2	7.2	20	23	20	25
F 41 2_18.9	18.9	—	—	—	—	—	—	—	—	5.8	6.3	5.7	6.7	5.7	6.7	20	23	20	25
F 41 2_24.1	24.1	—	—	—	—	4.9	5.4	4.9	5.4	4.9	5.4	4.8	5.8	4.8	5.8	19	22	19	24
F 41 2_30.1	30.1	—	—	—	—	4.3	4.8	4.3	4.8	4.3	4.8	4.2	5.2	4.2	5.2	18	21	18	23
F 41 2_38.2	38.2	—	—	—	—	3.8	4.2	3.8	4.2	3.7	4.2	3.6	4.6	3.6	4.6	18	20	17	22
F 41 2_47.9	47.9	—	—	—	—	3.5	3.9	3.5	3.9	3.4	3.9	3.3	4.3	3.3	4.3	18	20	17	22
F 41 3_51.5	51.5	—	—	—	—	—	—	—	—	5.7	6.2	5.6	6.6	5.6	6.6	20	22	19	24
F 41 3_60.2	60.2	—	—	—	—	—	—	—	—	4.9	5.4	4.7	5.7	4.7	5.7	19	22	19	24
F 41 3_66.5	66.5	—	—	—	—	—	—	—	—	4.7	5.2	4.5	5.5	4.5	5.5	19	21	18	23
F 41 3_84.9	84.9	—	—	—	—	4.2	4.7	4.2	4.7	4.2	4.7	4.0	5.0	4.0	5.0	18	21	18	23
F 41 3_106.0	106.0	—	—	—	—	3.9	4.4	3.9	4.4	3.8	4.3	3.7	4.7	3.7	4.7	18	21	18	23
F 41 3_134.4	134.4	—	—	—	—	3.5	3.9	3.5	3.9	3.4	3.9	3.3	4.3	3.3	4.3	18	20	17	22
F 41 3_168.7	168.7	—	—	—	—	3.3	3.7	3.3	3.7	3.2	3.7	3.1	4.1	3.1	4.1	17	20	17	22
F 41 3_180.7	180.7	—	—	—	—	3.3	3.7	3.3	3.7	3.2	3.7	3.1	4.1	3.1	4.1	—	—	—	—
F 41 3_198.9	198.9	—	—	—	—	3.2	3.6	3.2	3.6	3.1	3.6	3.0	4.0	3.0	4.0	—	—	—	—
F 41 3_220.1	220.1	—	—	—	—	3.2	3.6	3.2	3.6	3.1	3.6	3.0	4.0	3.0	4.0	—	—	—	—
F 41 3_240.1	240.1	—	—	—	—	3.1	3.6	3.1	3.6	3.1	3.6	2.9	3.9	2.9	3.9	—	—	—	—
F 41 3_266.9	266.9	—	—	—	—	3.1	3.5	3.1	3.5	3.0	3.5	2.9	3.9	2.9	3.9	—	—	—	—
F 41 3_296.6	296.6	—	—	—	—	3.1	3.5	3.1	3.5	3.0	3.5	2.9	3.9	2.9	3.9	—	—	—	—
F 41 3_344.8	344.8	—	—	—	—	3.0	3.4	3.0	3.4	2.9	3.4	2.8	3.8	2.8	3.8	—	—	—	—
F 41 4_433.7	433.7	0.48	0.74	0.50	0.94	—	—	3.0	3.5	3.0	3.5	2.8	3.8	—	—	—	—	—	—
F 41 4_549.8	549.8	0.46	0.72	0.48	0.92	—	—	3.0	3.4	2.9	3.4	2.8	3.8	—	—	—	—	—	—
F 41 4_690.1	690.1	0.45	0.71	0.47	0.91	—	—	3.0	3.4	2.9	3.4	2.8	3.8	—	—	—	—	—	—
F 41 4_739.4	739.4	0.44	0.70	0.46	0.90	—	—	3.0	3.4	2.9	3.4	2.8	3.8	—	—	—	—	—	—
F 41 4_813.8	813.8	0.44	0.70	0.46	0.90	—	—	3.0	3.4	2.9	3.4	2.8	3.8	—	—	—	—	—	—
F 41 4_900.5	900.5	0.44	0.70	0.46	0.90	—	—	3.0	3.4	2.9	3.4	2.8	3.8	—	—	—	—	—	—
F 41 4_982.4	982.4	0.44	0.70	0.46	0.90	—	—	3.0	3.4	2.9	3.4	2.8	3.8	—	—	—	—	—	—
F 41 4_1092	1092	0.43	0.69	0.45	0.89	—	—	3.0	3.4	2.9	3.4	2.8	3.8	—	—	—	—	—	—
F 41 4_1213	1213	0.43	0.69	0.45	0.89	—	—	3.0	3.4	2.9	3.4	2.8	3.8	—	—	—	—	—	—
F 41 4_1411	1411	0.43	0.69	0.45	0.89	—	—	3.0	3.4	2.9	3.4	2.8	3.8	—	—	—	—	—	—

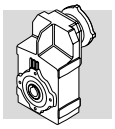

F 51

	i	J (•10-4) [kgm2]										
			IEC									
			63	71	80	90	100	112	132	160	180	
F 51 2_7.2	7.2	25	—	—	28	28	30	30	42	101	103	34
F 51 2_9.1	9.1	17	—	—	20	19	22	22	33	92	94	26
F 51 2_11.1	11.1	16	—	—	19	19	22	22	33	92	94	25
F 51 2_14.0	14.0	11	—	—	14	14	17	17	28	87	89	20
F 51 2_18.8	18.8	7.0	—	—	9.8	9.6	12	12	24	83	85	16
F 51 2_23.8	23.8	4.5	—	—	7.3	7.2	9.9	9.9	21	80	82	13
F 51 2_30.0	30.0	3.1	3.8	3.8	5.9	5.8	8.5	8.5	20	79	81	12
F 51 2_37.1	37.1	2.2	3.0	3.0	5.0	4.9	7.6	7.6	19	78	80	11
F 51 3_48.9	48.9	6.2	—	—	8.9	8.8	12	12	23	82	84	15
F 51 3_65.8	65.8	4.2	—	—	6.9	6.8	9.6	9.6	21	80	82	13
F 51 3_83.2	83.2	2.7	—	—	5.5	5.4	8.1	8.1	19	78	80	12
F 51 3_105.1	105.1	2.0	2.7	2.7	4.8	4.6	7.4	7.4	19	78	80	11
F 51 3_129.9	129.9	1.5	2.2	2.2	4.3	4.1	6.9	6.9	18	77	79	10
F 51 3_165.6	165.6	0.95	1.7	1.7	3.7	3.6	6.3	6.3	17	76	78	9.7
F 51 3_202.4	202.4	0.72	1.4	1.4	3.5	3.3	6.1	6.1	17	76	78	9.5
F 51 3_216.9	216.9	0.64	1.4	1.3	3.4	3.3	6.0	6.0	—	—	—	9.4
F 51 3_239.8	239.8	0.60	1.3	1.3	3.4	3.2	6.0	6.0	—	—	—	9.4
F 51 3_262.1	262.1	0.53	1.3	1.3	3.3	3.2	5.9	5.9	—	—	—	9.3
F 51 3_285.9	285.9	0.46	1.2	1.2	3.2	3.1	5.8	5.8	—	—	—	9.2
F 51 3_317.3	317.3	0.39	1.1	1.1	3.2	3.0	5.8	5.8	—	—	—	9.2
F 51 3_352.5	352.5	0.28	1.1	1.1	3.1	3.0	5.7	5.7	—	—	—	9.1
F 51 4_429.1	429.1	0.36	1.1	1.1	3.1	3.0	5.7	5.7	—	—	—	2.4
F 51 4_530.5	530.5	0.33	1.1	1.0	3.1	3.0	5.7	5.7	—	—	—	2.4
F 51 4_676.3	676.3	0.30	1.0	1.0	3.1	2.9	5.7	5.7	—	—	—	2.4
F 51 4_826.4	826.4	0.28	1.0	1.0	3.0	2.9	5.7	5.7	—	—	—	2.3
F 51 4_885.5	885.5	0.28	1.0	1.0	3.0	2.9	5.7	5.7	—	—	—	2.3
F 51 4_979.4	979.4	0.28	1.0	1.0	3.0	2.9	5.7	5.7	—	—	—	2.3
F 51 4_1070	1070	0.27	1.0	1.0	3.0	2.9	5.6	5.6	—	—	—	2.3
F 51 4_1168	1168	0.27	1.0	1.0	3.0	2.9	5.6	5.6	—	—	—	2.3
F 51 4_1296	1296	0.26	1.0	1.0	3.0	2.9	5.6	5.6	—	—	—	2.3
F 51 4_1439	1439	0.26	1.0	1.0	3.0	2.9	5.6	5.6	—	—	—	2.3

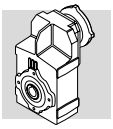

F 51

	i	J (•10-4) [kgm2]											
		SERVO											
		80B		95A		80C 95B 110A		95C 110B 130A		130B 180A		180B	
		SK	SC	SK	SC	SK	SC	SK	SC	SK	SC	SK	SC
F 51 2_7.2	7.2	—	—	—	—	28	29	28	23	42	44	42	47
F 51 2_9.1	9.1	—	—	—	—	20	21	19	20	34	36	33	38
F 51 2_11.1	11.1	—	—	—	—	19	20	19	20	33	35	33	38
F 51 2_14.0	14.0	—	—	—	—	14	15	14	15	28	30	28	33
F 51 2_18.8	18.8	—	—	—	—	9.8	10	9.6	11	24	26	24	29
F 51 2_23.8	23.8	—	—	—	—	7.3	7.8	7.2	8.2	21	24	21	26
F 51 2_30.0	30.0	5.9	6.4	5.9	6.4	5.9	6.4	5.8	6.8	20	23	20	25
F 51 2_37.1	37.1	5.0	5.5	5.0	5.5	5.0	5.5	4.9	5.9	19	22	19	24
F 51 3_48.9	48.9	—	—	—	—	8.9	9.4	8.8	9.8	23	26	23	28
F 51 3_65.8	65.8	—	—	—	—	6.9	7.4	6.8	7.8	21	24	21	26
F 51 3_83.2	83.2	—	—	—	—	5.5	6.0	5.4	6.4	20	22	19	24
F 51 3_105.1	105.1	4.8	5.3	4.8	5.3	4.8	5.3	4.6	5.6	19	21	19	24
F 51 3_129.9	129.9	4.3	4.8	4.3	4.8	4.3	4.8	4.1	5.1	18	21	18	23
F 51 3_165.6	165.6	3.8	4.2	3.8	4.2	3.7	4.2	3.6	4.6	18	20	17	22
F 51 3_202.4	202.4	3.5	4.0	3.5	4.0	3.5	4.0	3.3	4.3	18	20	17	22
F 51 3_216.9	216.9	3.5	3.9	3.5	3.9	3.4	3.9	3.3	4.3	—	—	—	—
F 51 3_239.8	239.8	3.4	3.9	3.4	3.9	3.4	3.9	3.2	4.2	—	—	—	—
F 51 3_262.1	262.1	3.4	3.8	3.4	3.8	3.3	3.8	3.2	4.2	—	—	—	—
F 51 3_285.9	285.9	3.3	3.7	3.3	3.7	3.2	3.7	3.1	4.1	—	—	—	—
F 51 3_317.3	317.3	3.2	3.6	3.2	3.6	3.2	3.7	3.0	4.0	—	—	—	—
F 51 3_352.5	352.5	3.1	3.5	3.1	3.5	3.1	3.6	3.0	4.0	—	—	—	—
F 51 4_429.1	429.1	—	—	3.2	3.6	3.1	3.6	3.0	4.0	—	—	—	—
F 51 4_530.5	530.5	—	—	3.2	3.6	3.1	3.6	3.0	4.0	—	—	—	—
F 51 4_676.3	676.3	—	—	3.1	3.6	3.1	3.6	2.9	3.9	—	—	—	—
F 51 4_826.4	826.4	—	—	3.1	3.5	3.0	3.5	2.9	3.9	—	—	—	—
F 51 4_885.5	885.5	—	—	3.1	3.5	3.0	3.5	2.9	3.9	—	—	—	—
F 51 4_979.4	979.4	—	—	3.1	3.5	3.0	3.5	2.9	3.9	—	—	—	—
F 51 4_1070	1070	—	—	3.1	3.5	3.0	3.5	2.9	3.9	—	—	—	—
F 51 4_1168	1168	—	—	3.1	3.5	3.0	3.5	2.9	3.9	—	—	—	—
F 51 4_1296	1296	—	—	3.1	3.5	3.0	3.5	2.9	3.9	—	—	—	—
F 51 4_1439	1439	—	—	3.1	3.5	3.0	3.5	2.9	3.9	—	—	—	—

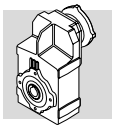

F 60

	i	J (•10-4) [kgm2]										
			IEC									
			63	71	80	90	100	112	132	160	180	
F 60 3_9.0	9.0	40	—	—	—	—	—	—	59	118	116	61
F 60 3_9.7	9.7	38	—	—	—	—	—	—	57	116	114	59
F 60 3_11.8	11.8	25	—	—	28	28	29	29	44	103	101	46
F 60 3_12.7	12.7	24	—	—	27	27	28	28	43	102	100	45
F 60 3_14.5	14.5	18	—	—	21	20	22	22	37	96	94	39
F 60 3_15.7	15.7	17	—	—	20	20	21	21	36	95	93	38
F 60 3_19.1	19.1	10	—	—	13	13	14	14	29	89	86	31
F 60 3_20.7	20.7	9.9	—	—	13	13	14	14	29	88	86	31
F 60 3_23.5	23.5	7.3	—	—	10	10	11	11	26	86	83	28
F 60 3_25.4	25.4	7.1	—	—	9.9	9.9	11	11	26	85	83	28
F 60 3_29.6	29.6	15	—	—	—	—	—	—	34	93	91	36
F 60 3_32.1	32.1	15	—	—	—	—	—	—	34	93	91	36
F 60 3_38.8	38.8	11	—	—	14	13	15	15	30	89	87	32
F 60 3_42.1	42.1	11	—	—	13	13	15	15	29	89	87	31
F 60 3_47.8	47.8	8.2	—	—	11	11	12	12	27	86	84	29
F 60 3_51.8	51.8	8.1	—	—	11	11	12	12	27	86	84	29
F 60 3_63.0	63.0	4.9	—	—	7.7	7.6	8.9	8.9	24	83	81	26
F 60 3_68.3	68.3	4.8	—	—	7.7	7.6	8.9	8.9	24	83	81	26
F 60 3_77.6	77.6	3.7	—	—	6.6	6.5	7.8	7.8	23	82	80	25
F 60 3_84.0	84.0	3.7	—	—	6.5	6.5	7.8	7.8	23	82	80	25
F 60 3_98.2	98.2	2.7	4.2	4.2	5.6	5.5	6.8	6.8	22	81	79	24
F 60 3_106.4	106.4	2.7	4.2	4.2	5.5	5.4	6.8	6.8	22	81	79	24
F 60 3_120.5	120.5	1.8	3.2	3.2	4.6	4.6	5.9	5.9	21	80	78	23
F 60 3_130.5	130.5	1.8	3.2	3.2	4.6	4.6	5.8	5.8	21	80	78	23
F 60 3_150.4	150.4	1.3	2.7	2.7	4.1	4.1	5.4	5.4	20	80	77	22
F 60 3_162.9	162.9	1.3	2.7	2.7	4.1	4.1	5.4	5.4	20	80	77	22
F 60 3_185.9	185.9	0.90	2.4	2.4	3.8	3.7	5.0	5.0	20	79	77	22
F 60 3_201.4	201.4	0.90	2.4	2.4	3.8	3.7	5.0	5.0	20	79	77	22
F 60 3_217.6	217.6	0.70	2.2	2.2	3.6	3.5	4.8	4.8	—	—	—	22
F 60 3_235.8	235.8	0.70	2.2	2.2	3.6	3.5	4.8	4.8	—	—	—	22
F 60 3_259.1	259.1	0.50	2.0	2.0	3.4	3.3	4.6	4.6	—	—	—	22
F 60 3_280.7	280.7	0.50	2.0	2.0	3.4	3.3	4.6	4.6	—	—	—	22

For the values of the moment of inertia of 4-stage gearboxes, please contact our Technical Service department.

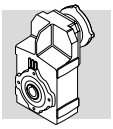

F 60

	i	J (•10-4) [kgm2]									
		SERVO									
		95A		80C 95B 110A		95C 110B 130A		130B 180A		180B	
		SK	SC	SK	SC	SK	SC	SK	SC	SK	SC
F 60 3_9.0	9.0	—	—	—	—	—	—	57	59	59	64
F 60 3_9.7	9.7	—	—	—	—	—	—	55	57	57	62
F 60 3_11.8	11.8	—	—	28	29	28	29	42	44	44	49
F 60 3_12.7	12.7	—	—	27	28	27	28	41	43	43	48
F 60 3_14.5	14.5	—	—	21	22	20	21	35	37	37	42
F 60 3_15.7	15.7	—	—	20	21	20	21	34	36	36	41
F 60 3_19.1	19.1	—	—	13	14	13	14	27	29	29	34
F 60 3_20.7	20.7	—	—	13	14	13	14	27	29	29	34
F 60 3_23.5	23.5	—	—	10	11	10	11	24	27	26	31
F 60 3_25.4	25.4	—	—	9.9	10	9.9	11	24	27	26	31
F 60 3_29.6	29.6	—	—	—	—	—	—	32	34	34	39
F 60 3_32.1	32.1	—	—	—	—	—	—	32	34	34	39
F 60 3_38.8	38.8	—	—	14	15	13	14	28	30	30	35
F 60 3_42.1	42.1	—	—	13	14	13	14	28	30	29	34
F 60 3_47.8	47.8	—	—	11	12	11	12	25	28	27	32
F 60 3_51.8	51.8	—	—	11	12	11	12	25	28	27	32
F 60 3_63.0	63.0	—	—	7.7	8.2	7.6	8.6	22	24	24	29
F 60 3_68.3	68.3	—	—	7.7	8.2	7.6	8.6	22	24	24	29
F 60 3_77.6	77.6	—	—	6.6	7.1	6.5	7.5	21	23	23	28
F 60 3_84.0	84.0	—	—	6.5	7.0	6.5	7.5	21	23	23	28
F 60 3_98.2	98.2	—	—	5.6	6.1	5.5	6.5	20	22	22	27
F 60 3_106.4	106.4	5.5	6.0	5.5	6.0	5.4	6.4	20	22	22	27
F 60 3_120.5	120.5	2.2	2.7	4.6	5.1	4.6	5.6	19	21	21	26
F 60 3_130.5	130.5	2.2	2.7	4.6	5.1	4.6	5.6	19	21	21	26
F 60 3_150.4	150.4	4.1	4.6	4.1	4.6	4.1	5.1	18	21	20	25
F 60 3_162.9	162.9	4.1	4.6	4.1	4.6	4.1	5.1	18	21	20	25
F 60 3_185.9	185.9	3.7	4.2	3.8	4.3	3.7	4.7	18	20	20	25
F 60 3_201.4	201.4	3.7	4.2	3.8	4.3	3.7	4.7	18	20	20	25
F 60 3_217.6	217.6	3.5	4.0	3.6	4.1	3.5	4.5	—	—	—	—
F 60 3_235.8	235.8	3.5	4.0	3.6	4.1	3.5	4.5	—	—	—	—
F 60 3_259.1	259.1	3.3	3.8	3.4	3.9	3.3	4.3	—	—	—	—
F 60 3_280.7	280.7	3.3	3.8	3.4	3.9	3.3	4.3	—	—	—	—

For the values of the moment of inertia of 4-stage gearboxes, please contact our Technical Service department.

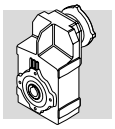

F 70

	i	J (•10-4) [kgm2]									
			IEC								
			80	90	100	112	132	160	180	200	
F 70 3_10.0	10.0	—	—	—	—	—	—	169	167	176	133
F 70 3_10.9	10.9	—	—	—	—	—	—	166	163	173	129
F 70 3_12.8	12.8	—	—	—	—	—	—	139	137	146	102
F 70 3_13.9	13.9	—	—	—	—	—	—	137	135	144	100
F 70 3_16.3	16.3	39	—	—	—	—	58	117	115	124	80
F 70 3_17.7	17.7	37	—	—	—	—	56	116	113	123	79
F 70 3_20.9	20.9	26	—	—	—	—	45	105	102	—	68
F 70 3_22.6	22.6	26	—	—	—	—	44	104	102	—	67
F 70 3_24.6	24.6	21	—	—	—	—	40	99	97	—	62
F 70 3_27.7	27.7	—	—	—	—	—	—	128	126	135	73
F 70 3_30.0	30.0	—	—	—	—	—	—	127	125	134	73
F 70 3_35.4	35.4	—	—	—	—	—	—	114	112	121	77
F 70 3_38.4	38.4	—	—	—	—	—	—	114	111	121	77
F 70 3_45.2	45.2	23	—	—	—	—	42	101	99	108	65
F 70 3_49.0	49.0	23	—	—	—	—	42	101	99	108	65
F 70 3_57.7	57.7	17	—	—	—	—	36	95	93	—	58
F 70 3_62.5	62.5	17	—	—	—	—	36	95	93	—	58
F 70 3_67.9	67.9	14	—	—	—	—	33	92	90	—	55
F 70 3_73.6	73.6	14	—	—	—	—	33	92	90	—	55
F 70 3_85.4	85.4	9.0	11	11	13	13	28	87	85	—	50
F 70 3_92.5	92.5	9.0	11	11	13	13	28	87	85	—	50
F 70 3_101.2	101.2	6.3	8.9	8.8	10	10	25	85	82	—	47
F 70 3_109.6	109.6	6.3	8.9	8.8	10	10	25	85	82	—	47
F 70 3_122.7	122.7	5.1	7.9	7.8	9.1	9.1	24	83	81	—	46
F 70 3_133.0	133.0	5.1	7.9	7.8	9.1	9.1	24	83	81	—	46
F 70 3_153.8	153.8	3.2	6.0	6.0	7.3	7.3	22	81	79	—	44
F 70 3_166.7	166.7	3.2	6.0	6.0	7.3	7.3	22	81	79	—	44
F 70 3_180.9	180.9	2.3	5.1	5.1	6.3	6.3	21	81	78	—	43
F 70 3_196.0	196.0	2.3	5.1	5.0	6.3	6.3	21	81	78	—	43

For the values of the moment of inertia of 4-stage gearboxes, please contact our Technical Service department.

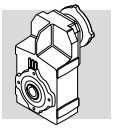

F 80

	i	J (•10-4) [kgm2]										
			IEC									
			80	90	100	112	132	160	180	200	225	
F 80 3_10.3	10.3	—	—	—	—	—	—	—	286	300	578	252
F 80 3_11.2	11.2	—	—	—	—	—	—	—	277	291	569	244
F 80 3_12.9	12.9	—	—	—	—	—	—	217	218	231	509	184
F 80 3_14.0	14.0	—	—	—	—	—	—	212	212	226	504	178
F 80 3_16.2	16.2	—	—	—	—	—	—	173	171	180	464	136
F 80 3_17.6	17.6	—	—	—	—	—	—	170	167	177	461	133
F 80 3_20.3	20.3	60	—	—	—	—	79	139	136	146	431	102
F 80 3_22.0	22.0	58	—	—	—	—	77	136	134	143	429	100
F 80 3_25.2	25.2	43	—	—	—	—	62	121	119	150	413	84
F 80 3_28.8	28.8	—	—	—	—	—	—	—	189	203	480	155
F 80 3_31.3	31.3	—	—	—	—	—	—	—	188	201	479	154
F 80 3_36.0	36.0	—	—	—	—	—	—	155	155	169	447	121
F 80 3_39.0	39.0	—	—	—	—	—	—	154	154	168	446	121
F 80 3_45.3	45.3	—	—	—	—	—	—	133	132	141	425	97
F 80 3_49.1	49.1	—	—	—	—	—	—	133	131	140	425	97
F 80 3_56.7	56.7	35	—	—	—	—	54	113	111	120	406	77
F 80 3_61.5	61.5	35	—	—	—	—	54	113	111	120	406	76
F 80 3_70.4	70.4	27	—	—	—	—	46	105	103	133	397	68
F 80 3_76.3	76.3	27	—	—	—	—	45	105	103	133	396	68
F 80 3_85.2	85.2	20	—	—	—	—	39	99	96	126	389	62
F 80 3_92.3	92.3	20	—	—	—	—	39	99	96	126	389	61
F 80 3_105.0	105.0	14	16	16	17	17	32	92	90	119	383	55
F 80 3_113.8	113.8	14	16	16	17	17	32	92	90	119	382	55
F 80 3_122.5	122.5	13	15	15	17	17	32	91	89	118	381	54
F 80 3_132.7	132.7	13	15	15	16	16	31	91	89	118	381	54
F 80 3_147.9	147.9	8.5	11	11	13	13	27	87	85	—	—	50
F 80 3_160.2	160.2	8.5	11	11	13	13	27	87	84	—	—	50
F 80 3_184.6	184.6	5.1	7.9	7.8	9.1	9.1	24	83	81	—	—	46
F 80 3_200.0	200.0	5.0	7.9	7.8	9.1	9.1	24	83	81	—	—	46

For the values of the moment of inertia of 4-stage gearboxes, please contact our Technical Service department.

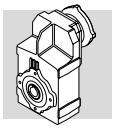

F 90

	i	J (•10-4) [kgm2]											
			IEC										
			80	90	100	112	132	160	180	200	225	250	
F 90 3_10.3	10.3	—	—	—	—	—	—	—	549	559	843	870	850
F 90 3_11.1	11.1	—	—	—	—	—	—	—	529	539	823	850	830
F 90 3_13.4	13.4	—	—	—	—	—	—	—	373	383	667	694	674
F 90 3_14.5	14.5	—	—	—	—	—	—	—	361	371	655	682	662
F 90 3_16.5	16.5	—	—	—	—	—	—	—	286	296	580	607	587
F 90 3_17.9	17.9	—	—	—	—	—	—	—	278	288	572	599	579
F 90 3_20.6	20.6	—	—	—	—	—	—	224	222	232	516	542	513
F 90 3_22.3	22.3	—	—	—	—	—	—	220	217	227	511	537	508
F 90 3_25.4	25.4	103	—	—	—	—	122	181	179	188	474	500	471
F 90 3_28.6	28.6	—	—	—	—	—	—	—	291	301	585	613	593
F 90 3_31.0	31.0	—	—	—	—	—	—	—	289	299	583	610	590
F 90 3_37.4	37.4	—	—	—	—	—	—	—	222	232	516	543	523
F 90 3_40.5	40.5	—	—	—	—	—	—	—	220	230	514	541	521
F 90 3_46.1	46.1	—	—	—	—	—	—	—	186	196	480	507	487
F 90 3_49.9	49.9	—	—	—	—	—	—	—	185	195	479	506	486
F 90 3_57.3	57.3	—	—	—	—	—	—	161	158	168	452	479	450
F 90 3_62.1	62.1	—	—	—	—	—	—	160	158	167	451	478	449
F 90 3_70.8	70.8	61	—	—	—	—	80	139	137	146	432	458	429
F 90 3_76.7	76.7	60	—	—	—	—	79	139	136	146	431	458	429
F 90 3_88.4	88.4	44	—	—	—	—	63	123	120	151	414	441	412
F 90 3_95.8	95.8	44	—	—	—	—	63	122	120	151	414	441	412
F 90 3_103.3	103.3	41	—	—	—	—	59	119	117	146	410	436	408
F 90 3_111.9	111.9	40	—	—	—	—	59	119	116	146	409	436	407
F 90 3_126.8	126.8	26	29	29	30	30	45	105	102	132	395	422	393
F 90 3_137.3	137.3	26	29	29	30	30	45	104	102	132	395	422	393
F 90 3_150.3	150.3	21	24	24	25	25	40	100	97	127	390	417	388
F 90 3_162.8	162.8	21	24	24	25	25	40	100	97	127	390	417	388
F 90 3_179.2	179.2	14	16	16	18	18	33	92	90	—	—	—	381
F 90 3_194.2	194.2	14	16	16	17	17	33	92	90	—	—	—	381

For the values of the moment of inertia of 4-stage gearboxes, please contact our Technical Service department.

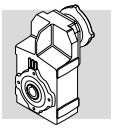

64 EXACT RATIOS

i_N	F 10	F 20	F 25	F 31	F 41	F 51	F 60	F 70	F 80	F 90
6.3		6.41210								
7.1	7.40443		6.86957	6.94907	6.72727	7.19408				
8.0		7.83478	8.39375	8.22917						
9.0	8.58204	8.73227	9.35526	9.01630	9.13580	9.05114	8.96000			
10.0	9.76974	10.03069	10.62451	10.74747			9.70667	10.01538	10.33846	10.26577
11.2	11.53759	11.23370			10.77273	11.11005	11.75320	10.85000	11.20000	11.12125
12.5	13.02632		12.98182	12.72727		13.97796	12.73263	12.81731	12.90240	13.41346
14.0	14.64777	14.79842	14.46890	13.94466	14.62963		14.47385	13.88542	13.97760	14.53125
16.0	16.97738		16.62032	16.80000	17.11667		15.68000	16.34455	16.24615	16.52538
18.0		18.08182	18.61364	18.48804	18.89130	18.82155	19.06872	17.70660	17.60000	17.90250
20.0	19.32692	20.15311	21.81818	21.11230			20.65778	20.86538	20.33231	20.56731
22.4	22.82418	23.14973	23.75758	23.38636		23.79447	23.46381	22.60417	22.02667	22.28125
25.0	25.76923	25.92614	27.20455	27.27273	24.11579		25.41913	24.55695	25.22585	25.38622
28.0	29.63462	30.38961	30.03636	30.12121	30.11875	30.03828	29.61538	27.69231	28.84615	28.61169
31.5	32.98462	33.09091	32.18182	34.36364			32.08333	30.00000	31.25000	30.99600
35.5	35.34066	37.89205	36.41958	37.67273	38.18333	37.13636	38.84771	35.43956	36.00000	37.38462
40.0	39.64497	41.83636	40.72727	40.36364			42.08502	38.39286	39.00000	40.50000
45.0	44.66667	44.82468	45.56607	44.64336	47.92667		47.84024	45.19231	45.32967	46.05785
50.0	48.72727	50.72727	50.78571	47.54630	51.49270	48.89965	51.82692	48.95833	49.10714	49.89600
56.0	56.69231	56.72727	58.33718	52.09420	60.24646		63.02761	57.69231	56.73077	57.32308
63.0	62.99145	61.88430	65.33371	62.76111	66.49275	65.84416	68.27991	62.50000	61.45833	62.10000
71.0	71.12308	69.13636	76.58163	69.06725			77.55467	73.55769	70.38462	70.75385
80.0	81.31624	76.81818	83.38889	78.87092	84.88166	83.24111	84.01756	85.38462	76.25000	76.65000
90.0	91.48077	90.40909	95.48772	87.36632			98.19838	92.50000	92.30769	88.39385
100.0	106.02198	101.63636	105.42738	101.88492	106.01061	105.08407	106.38158	101.18343	105.00000	103.33491
112.2		114.34091	112.95791	112.52623			120.45488	109.61538	113.75000	111.94615
125.5	127.12821	132.19481	127.83242	128.37500	134.39596	129.91558	130.49279	122.72727	122.48521	126.77538
140.0		156.30469	142.95238	140.73704			150.35503	132.95455	132.69231	150.30533
160.0		172.57500	155.94805	166.77778	168.69010	165.62338	162.88462	166.66667	160.22727	162.83077
180.0		184.90179	174.22321	185.43056	180.73939	202.39481	185.89349	180.94406	184.61538	179.21958
200.0		209.25000	193.58135	202.28788	198.92028	216.85158	201.38462	196.02273	200.00000	194.15455
225.0		234.00000	227.83036	228.22222	220.13131	239.84416	217.64679	216.52422	218.49174	213.59178
250.0		255.27273	256.12302	253.58025	240.14325	262.11039	259.08284	234.56790	273.89277	231.39109
280.0		285.18750	288.13839	293.83611	266.93818	285.93861	280.67308	280.93645	296.71717	268.72770
315.0		316.87500	333.13010	332.82407	296.59798	317.26753	315.38899	304.34783	353.67893	291.12168
355.0		372.93750		374.42708	344.79515	352.51948	341.67140	372.46964	383.15217	361.84615
400.0		419.25000	393.88686	418.86023		429.09330	399.34008	403.50877	451.49061	392.00000
450.0		471.65625	434.88795	462.60785	433.67975		432.61842	471.15385	489.11483	457.45099
500.0			465.95137	527.76389			489.84985	510.41667	563.87675	495.57191
560.0		545.30357	527.30872	578.58560	549.80165	530.48864	530.67067	606.83761	610.86648	577.48888
630.0			589.67857	619.91314	690.09587	676.29545	611.44379	657.40741	714.86014	625.61296
710.0			643.28571	685.64198	739.38843	826.44545	755.96686	758.97436	774.43182	713.95030
800.0			718.67076	762.32562	813.76478	885.47727	818.96410	822.22222	897.27273	773.44615
900.0			798.52307	831.62795	900.53719	979.36364	885.09695	899.40828	972.04545	910.18225
1000.0			939.80022	938.24691	982.40421	1070.28409	958.85503	974.35897	1058.06885	986.03077
1125.0			1056.50744	1042.49657	1092.01983	1167.58264	1053.60355	1090.90909	1146.24126	1112.25941
1250.0			1188.57087	1207.99290	1213.35537	1295.50909	1141.40385	1181.81818	1277.33630	1204.94769
1400.0			1374.16167	1368.27675	1410.52562	1439.45455		1367.52137	1383.78099	1427.90059
1600.0				1539.31134				1584.61538	1577.62238	1571.37386
1800.0								1716.66667	1709.09091	1702.32168
2000.0								2019.23077	1833.98601	1937.26864
2250.0								2187.50000	1986.81818	2098.70769

2x 3x 4x

65 DIMENSIONS

F 10...M/ME/MX/MXN

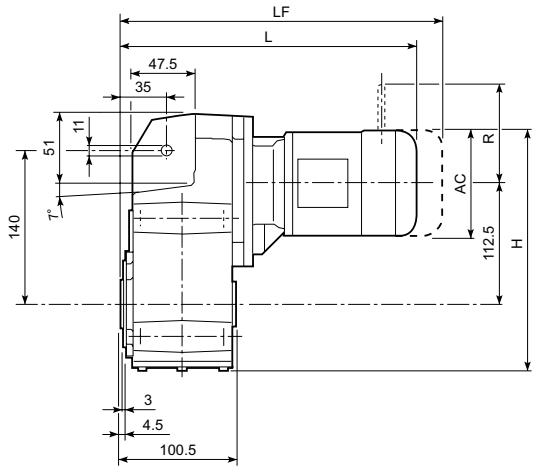

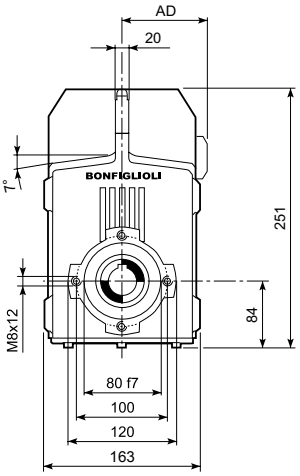

			Gearmotor - Without brake						Gearmotor - With brake								
									M...FD				M...FDD				
			AC	H	L		AD	Kg	LF	Kg	R	AD	LF		Kg	R	AD
					plastic	metal							plastic	metal			
F 10 2	S05	M05	121	220.5	—	311.5	95	12	377.5	13	96	122	—	—	—	—	—
		ME05	121	220.5	—	311.5	95	12	377.5	13	96	119	—	—	—	—	—
		MX05	121	220.5	—	311.5	95	12	377.5	13	96	119	—	—	—	—	—
	SX05	MXN05	123	221.5	358	336	122.3	13.8	—	—	—	—	385	350.7	14.9	106	136
	S1	M1	138	265.5	—	340.5	108	14	401.5	17	103	135	—	—	—	—	—
		ME1	138	265.5	—	340.5	108	14	401.5	17	103	135	—	—	—	—	—
		MX1	138	265.5	—	340.5	108	14	401.5	17	103	135	—	—	—	—	—
	SX10	MXN10	138	265.5	369.5	350	123.3	16.4	—	—	—	—	405.5	370.6	18.8	106	138
	S2	ME2S	156	274.5	—	369.5	119	18	439.5	20.1	129	143	—	—	—	—	—
		MX2S	156	274.5	—	413.5	119	23	485.5	27.3	129	143	—	—	—	—	—
	SX20	MXN20	158	275.5	467	450.7	132.8	25.2	—	—	—	—	508	469.8	27.4	115	148
	S3	ME3S	195	294	—	412.5	142	22	508.5	29.4	160	155	—	—	—	—	—
		MX3S	195	294	—	444.5	142	25	534.5	34.4	160	155	—	—	—	—	—
		ME3L	195	294	—	444.5	142	24	535.5	35.9	160	155	—	—	—	—	—
		MX3L	195	294	—	488.5	142	30	580.5	43.4	160	155	—	—	—	—	—

F 10...P(IEC)

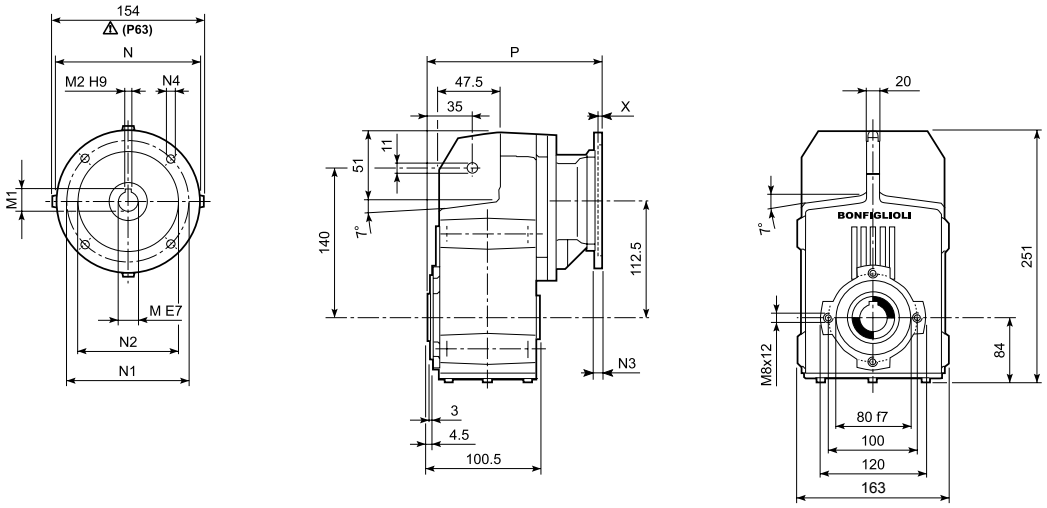

		M	M1	M2	N	N1	N2	N3	N4	X	P	Kg
F 10 2	**P63**	11	12.8	4	140	115	95	—	M8x19	4	185.5	8
F 10 2	**P71**	14	16.3	5	160	130	110	—	M8x16	4.5	185.5	8
F 10 2	**P80**	19	21.8	6	200	165	130	—	M10x14.5	4	205	9
F 10 2	**P90**	24	27.3	8	200	165	130	—	M10x14.5	4	205	9
F 10 2	**P100**	28	31.3	8	250	215	180	—	M12x16	4.5	215	13
F 10 2	**P112**	28	31.3	8	250	215	180	—	M12x16	4.5	215	13

F 10...HS

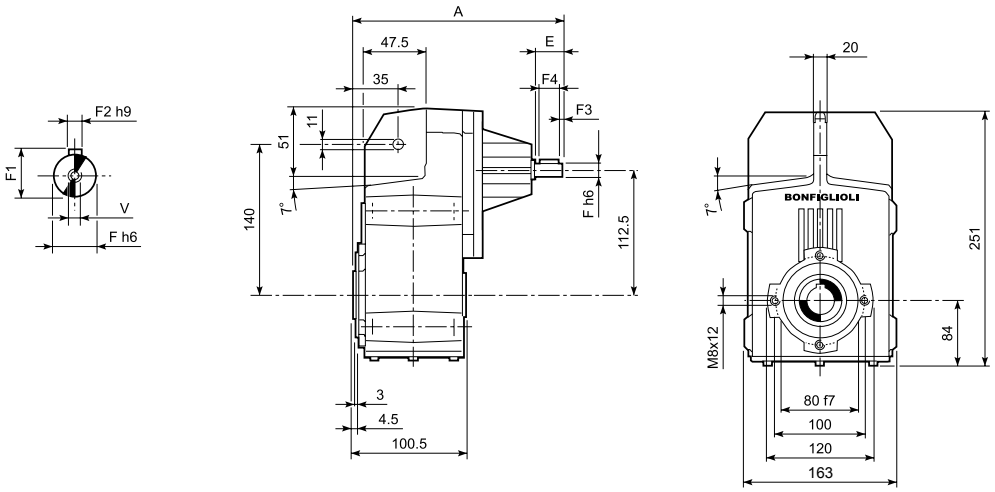

		A	E	F	F1	F2	F3	F4	V	Kg
F 10 2	**HS**	192	40	16	18	5	2.5	35	M6x16	7.5

F 10...SK / SC

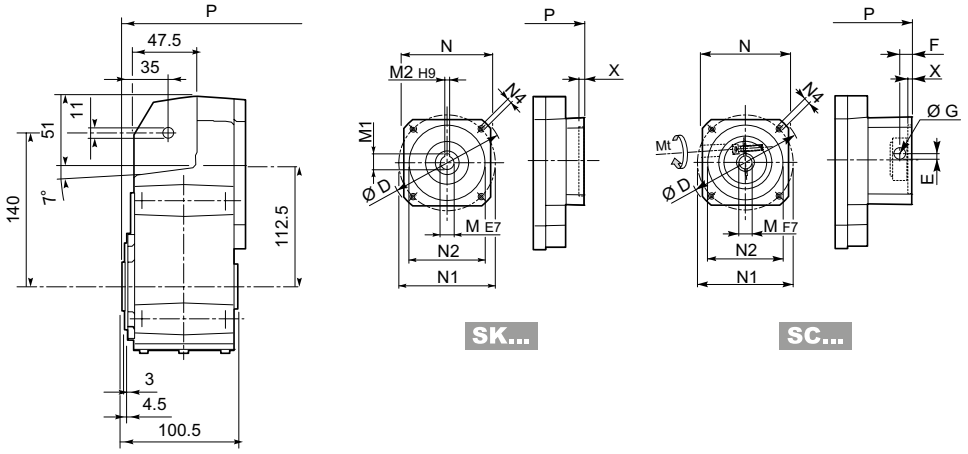

		D	M	M1	M2	N	N1	N2	N4	X	P	Kg
F 10 2	**SK 60A**	102	11	12.8	4	82	75	60	M5x10	3.5	157	8
F 10 2	**SK 60B**	102	14	16.3	5	82	75	60	M5x10	4	164	8
F 10 2	**SK 80A**	115	14	16.3	5	90	100	80	M6x12	4	164	8
F 10 2	**SK 80C**	120	19	21.8	6	96	100	80	M6x12	4	205	9
F 10 2	**SK 95A**	130	14	16.3	5	102	115	95	M8x12	4	205	9
F 10 2	**SK 95B**	130	19	21.8	6	102	115	95	M8x12	4	205	9
F 10 2	**SK 95C**	130	24	27.3	8	102	115	95	M8x12	4	205	9
F 10 2	**SK 110A**	150	19	21.8	6	120	130	110	M8x12	5	205	9
F 10 2	**SK 110B**	150	24	27.3	8	120	130	110	M8x12	5	205	9

			Mt [Nm]	D	E	F	G	M	N	N1	N2	N4	X	P	Kg
F 10 2	**SC 60A**	M6	15	102	7	12.5	12.5	11	82	75	60	M5x10	4	184	8
F 10 2	**SC 60B**	M6	15	102	7	12.5	12.5	14	82	75	60	M5x10	4	184	9
F 10 2	**SC 80A**	M6	15	115	6	12.5	12.5	14	90	100	80	M6x12	4	184	9
F 10 2	**SC 80C**	M6	15	120	15.5	14.5	17.75	19	96	100	80	M6x12	4	228.5	10
F 10 2	**SC 95A**	M6	15	130	16.5	15	17.75	14	102	115	95	M8x16	4	228.5	10
F 10 2	**SC 95B**	M6	15	130	16.5	15	17.75	19	102	115	95	M8x16	4	228.5	10
F 10 2	**SC 95C**	M6	15	130	16.5	15	17.75	24	102	115	95	M8x16	4	228.5	10
F 10 2	**SC 110A**	M6	15	150	16.5	16	17.75	19	120	130	110	M8x16	5	228.5	11
F 10 2	**SC 110B**	M6	15	150	16.5	16	17.75	24	120	130	110	M8x16	5	228.5	11

F 10...H

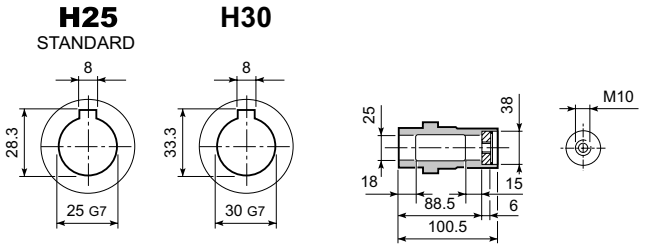

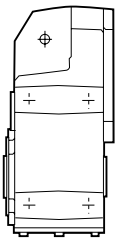

F 10...S

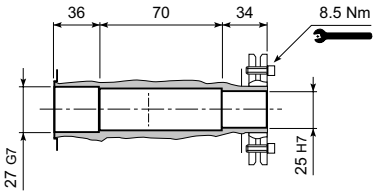

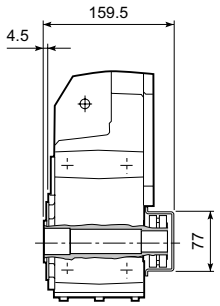

F 10...R

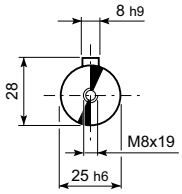

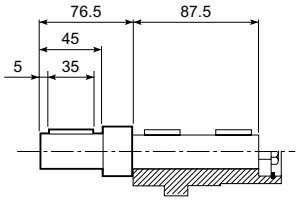

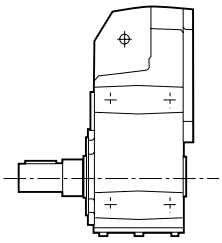

F 10...QF

	Ø
QF25	25
QF30	30

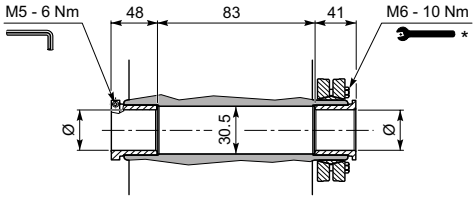

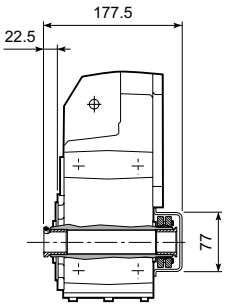

F 10...F...

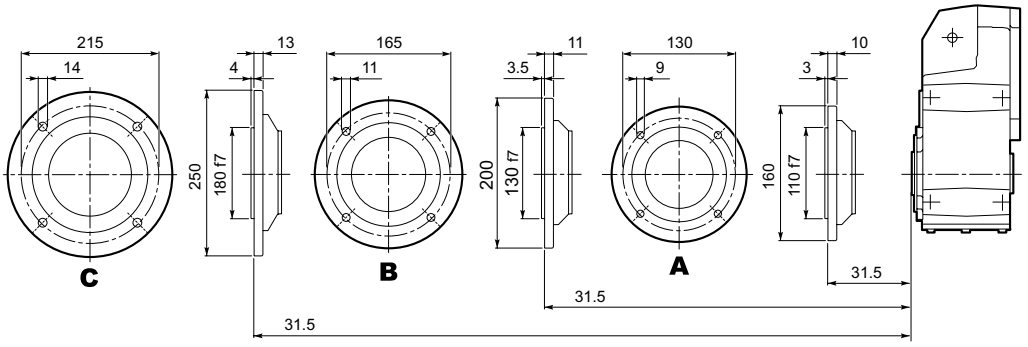

* Follow the MOUNTING INSTRUCTIONS supplied with the gearbox.

F 20...M/ME/MX/MXN

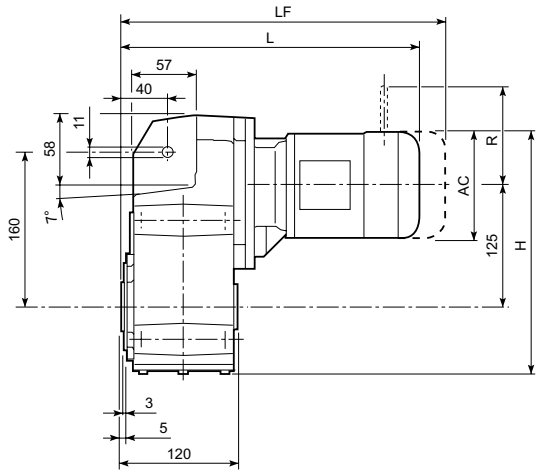

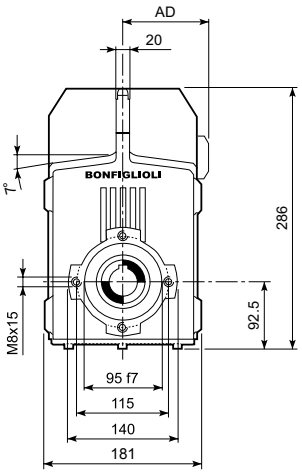

			Gearmotor - Without brake						Gearmotor - With brake								
									M...FD				M...FDD				
			AC	H	L plastic	L metal	AD	Kg	LF	Kg	R	AD	LF plastic	LF metal	Kg	R	AD
F 20 2	S05	M05	121	278.2	—	323.5	95	15	389.5	17	96	122	—	—	—	—	—
		ME05	121	278.2	—	323.5	95	15	389.5	17	96	119	—	—	—	—	—
		MX05	121	278.2	—	323.5	95	15	389.5	17	96	119	—	—	—	—	—
	SX05	MXN05	123	279.2	370	348	122.3	16.8	—	—	—	—	397	362.7	17.9	106	136
	S1	M1	138	286.7	—	352.5	108	17	413.5	20	103	135	—	—	—	—	—
		ME1	138	286.7	—	352.5	108	17	413.5	20	103	135	—	—	—	—	—
		MX1	138	286.7	—	352.5	108	17	413.5	20	103	135	—	—	—	—	—
	SX10	MXN10	138	286.7	381.5	362	123.3	19.4	—	—	—	—	417.5	382.6	21.8	106	138
	S2	ME2S	156	295.7	—	381.5	119	21	451.5	22.8	129	143	—	—	—	—	—
		MX2S	156	295.7	—	425.5	119	26	497.5	30	129	143	—	—	—	—	—
	SX20	MXN20	158	296.7	479	462.7	132.8	28.2	—	—	—	—	520	481.8	30.4	115	148
	S3	ME3S	195	315.2	—	424.5	142	26	520.5	32.1	160	155	—	—	—	—	—
		MX3S	195	315.2	—	456.5	142	29	546.5	37.1	160	155	—	—	—	—	—
		ME3L	195	315.2	—	456.5	142	33	547.5	38.6	160	155	—	—	—	—	—
		MX3L	195	315.2	—	500.5	142	39	592.5	46.1	160	155	—	—	—	—	—
F 20 3	S05	M05	121	278.2	—	379	95	17	445	18	96	122	—	—	—	—	—
		ME05	121	278.2	—	379	95	17	445	18	96	119	—	—	—	—	—
		MX05	121	278.2	—	379	95	17	445	18	96	119	—	—	—	—	—
	SX05	MXN05	121	278.2	425	403	122.3	18.8	—	—	—	—	452	417.7	19.9	106	136
	S1	M1	138	286.7	—	408	108	19	469	21	103	135	—	—	—	—	—
		ME1	138	286.7	—	408	108	19	469	21	103	135	—	—	—	—	—
		MX1	138	286.7	—	408	108	19	469	21	103	135	—	—	—	—	—
	SX10	MXN10	138	286.7	437	417.5	123.3	21.4	—	—	—	—	473	438.1	23.8	106	138
	S2	ME2S	156	295.7	—	437	119	22	507	24.8	129	143	—	—	—	—	—
		MX2S	156	295.7	—	481	119	27	553	32	129	143	—	—	—	—	—
	SX20	MXN20	156	295.7	534.5	518.2	132.8	29.2	—	—	—	—	575.5	537.3	31.4	115	148
	S3	ME3S	195	315.2	—	480	142	27	576	34.1	160	155	—	—	—	—	—
		MX3S	195	315.2	—	512	142	30	602	39.1	160	155	—	—	—	—	—
		ME3L	195	315.2	—	512	142	34	603	40.6	160	155	—	—	—	—	—
		MX3L	195	315.2	—	556	142	40	648	48.1	160	155	—	—	—	—	—

F 20...P(IEC)

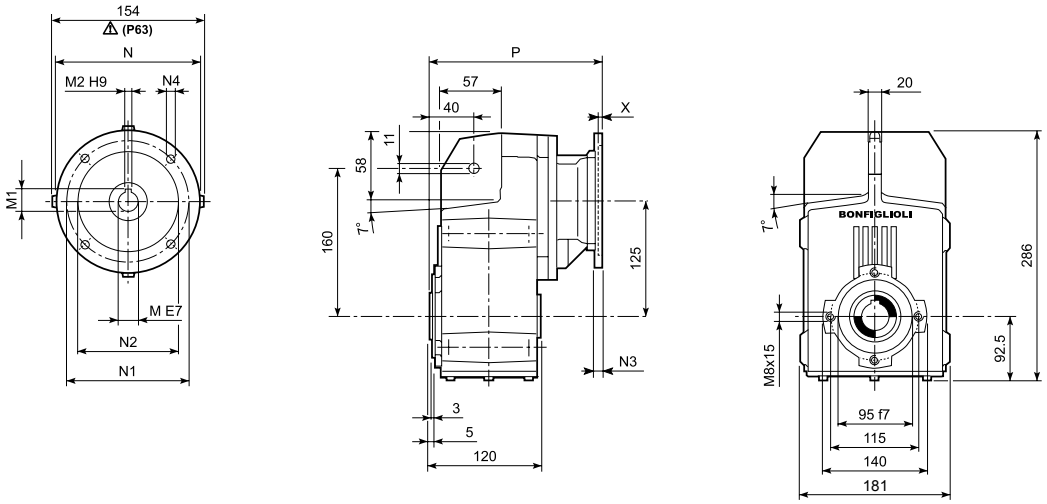

		M	M1	M2	N	N1	N2	N3	N4	X	P	Kg
F 20 2	**P63**	11	12.8	4	140	115	95	—	M8x19	4	197.5	12
F 20 2	**P71**	14	16.3	5	160	130	110	—	M8x16	4.5	197.5	12
F 20 2	**P80**	19	21.8	6	200	165	130	—	M10x14.5	4	217	13
F 20 2	**P90**	24	27.3	8	200	165	130	—	M10x14.5	4	217	12
F 20 2	**P100**	28	31.3	8	250	215	180	—	M12x16	4.5	227	16
F 20 2	**P112**	28	31.3	8	250	215	180	—	M12x16	4.5	227	16
F 20 3	**P63**	11	12.8	4	140	115	95	—	M8x19	4	253	13
F 20 3	**P71**	14	16.3	5	160	130	110	—	M8x16	4.5	253	13
F 20 3	**P80**	19	21.8	6	200	165	130	—	M10x14.5	4	272.5	14
F 20 3	**P90**	24	27.3	8	200	165	130	—	M10x14.5	4	272.5	14
F 20 3	**P100**	28	31.3	8	250	215	180	—	M12x16	4.5	282.5	18
F 20 3	**P112**	28	31.3	8	250	215	180	—	M12x16	4.5	282.5	18

F 20...HS

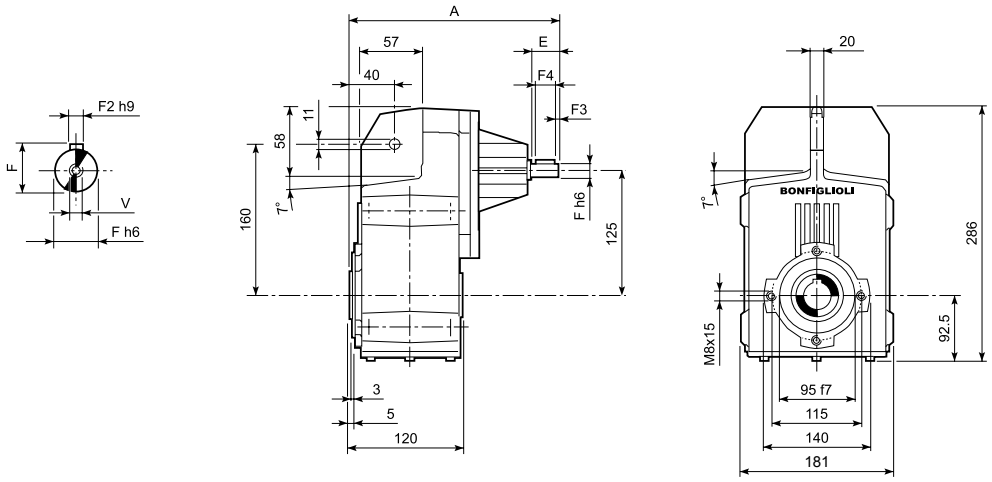

		A	E	F	F1	F2	F3	F4	V	Kg
F 20 2	**HS**	247.5	40	19	21.5	6	2.5	35	M6x16	11.5
F 20 3		260	40	16	18	5	2.5	35	M6x16	12.4

F 20...SK / SC

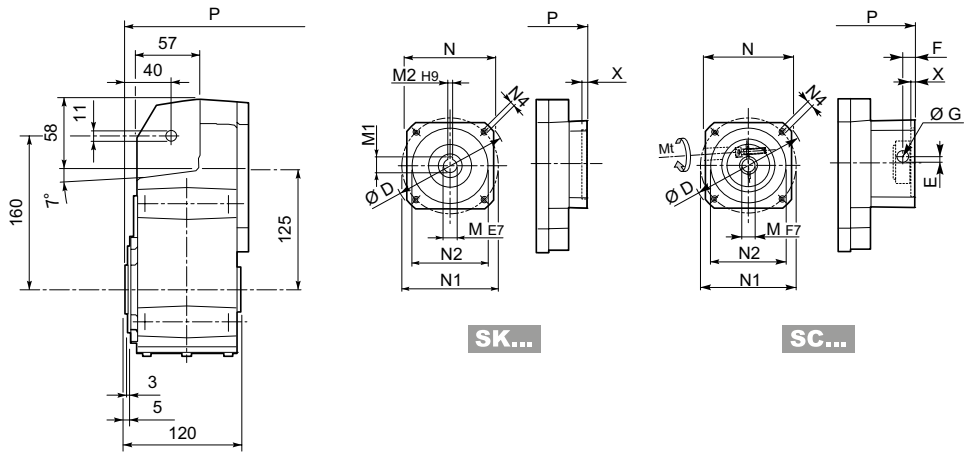

											2x		3x	
		D	M	M1	M2	N	N1	N2	N4	X	P	Kg	P	Kg
F 20 2/3	SK 60A	102	11	12.8	4	82	75	60	M5x10	3.5	169	11	224.5	12
F 20 2/3	SK 60B	102	14	16.3	5	82	75	60	M5x10	4	176	12	231.5	13
F 20 2/3	SK 80A	115	14	16.3	5	90	100	80	M6x12	4	217	12	231.5	13
F 20 2/3	SK 80C	120	19	21.8	6	96	100	80	M6x12	4	217	13	272.5	14
F 20 2/3	SK 95A	130	14	16.3	5	102	115	95	M8x12	4	217	13	272.5	14
F 20 2/3	SK 95B	130	19	21.8	6	102	115	95	M8x12	4	217	13	272.5	14
F 20 2/3	SK 95C	130	24	27.3	8	102	115	95	M8x12	4	217	13	272.5	14
F 20 2/3	SK 110A	150	19	21.8	6	120	130	110	M8x12	5	217	13	272.5	14
F 20 2/3	SK 110B	150	24	27.3	8	120	130	110	M8x12	5	217	13	272.5	14

														2x		3x	
			Mt [Nm]	D	E	F	G	M	N	N1	N2	N4	X	P	Kg	P	Kg
F 20 2/3	SC 60A	M6	15	102	7	12.5	12.5	11	82	75	60	M5x10	4	196	12	251.5	13
F 20 2/3	SC 60B	M6	15	102	7	12.5	12.5	14	82	75	60	M5x10	4	196	13	251.5	14
F 20 2/3	SC 80A	M6	15	115	6	12.5	12.5	14	90	100	80	M6x12	4	196	13	251.5	14
F 20 2/3	SC 80C	M6	15	120	15.5	14.5	17.75	19	96	100	80	M6x12	4	240.5	14	296	15
F 20 2/3	SC 95A	M6	15	130	16.5	15	17.75	14	102	115	95	M8x16	4	240.5	14	296	15
F 20 2/3	SC 95B	M6	15	130	16.5	15	17.75	19	102	115	95	M8x16	4	240.5	14	296	15
F 20 2/3	SC 95C	M6	15	130	16.5	15	17.75	24	102	115	95	M8x16	4	240.5	14	296	15
F 20 2/3	SC 110A	M6	15	150	16.5	16	17.75	19	120	130	110	M8x16	5	240.5	15	296	16
F 20 2/3	SC 110B	M6	15	150	16.5	16	17.75	24	120	130	110	M8x16	5	240.5	15	296	16

F 20

F 20...H

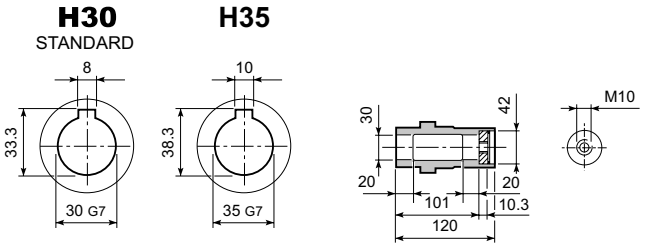

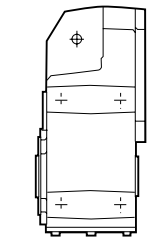

F 20...S

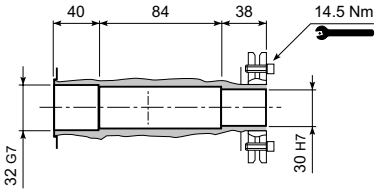

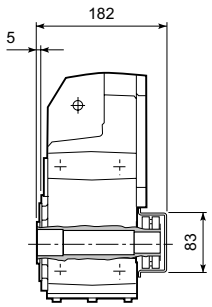

F 20...R

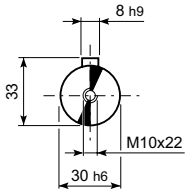

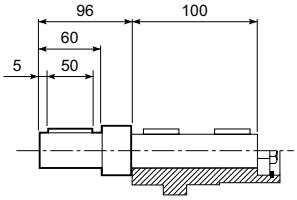

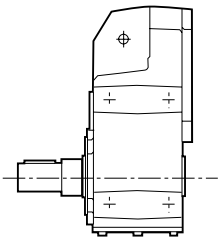

F 20...QF

	Ø
QF25	25
QF30	30

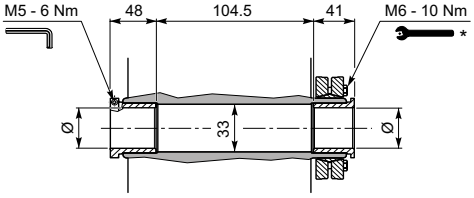

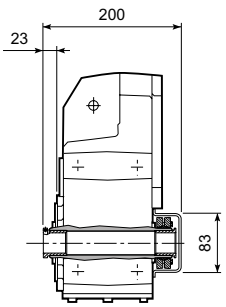

F 20...F...

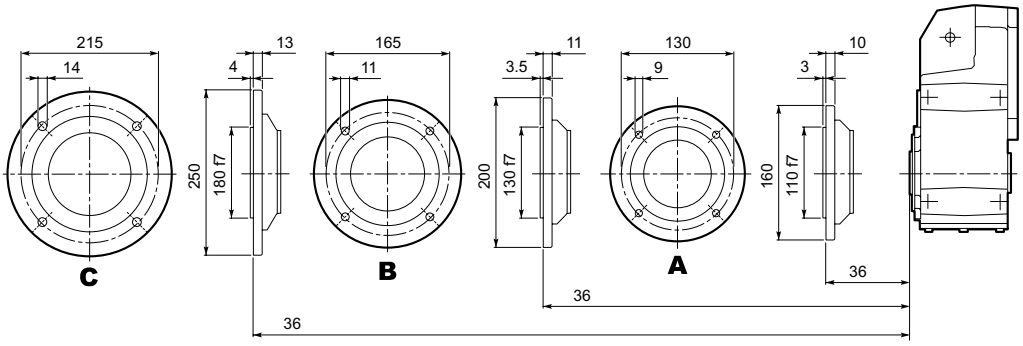

* Follow the MOUNTING INSTRUCTIONS supplied with the gearbox.

F 25...M/ME/MX/MXN

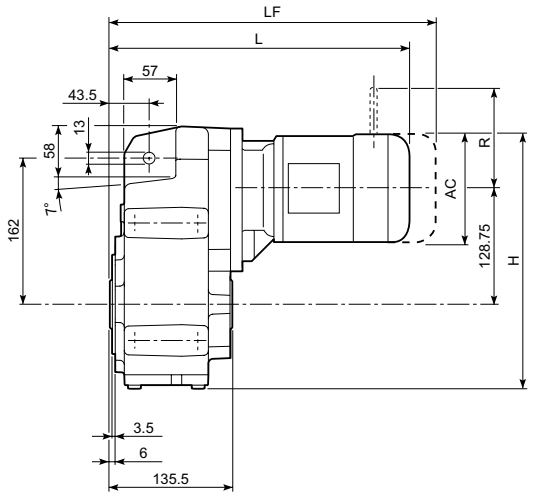

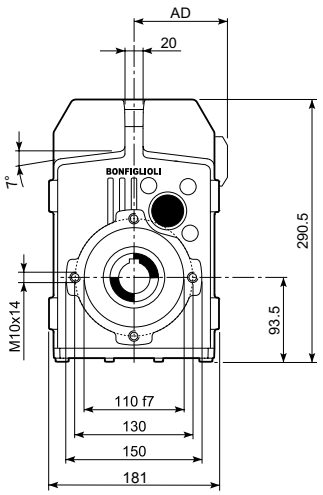

			Gearmotor - Without brake						Gearmotor - With brake								
									M...FD				M...FDD				
			AC	H	L		AD	Kg	LF	Kg	R	AD	LF		Kg	R	AD
					plastic	metal							plastic	metal			
F 25 2/3	S05	M05	121	283	—	339	95	15	405	17	96	122	—	—	—	—	—
		ME05	121	283	—	339	95	15	405	17	96	119	—	—	—	—	—
		MX05	121	283	—	339	95	15	405	17	96	119	—	—	—	—	—
	SX05	MXN05	123	284	385.5	363.5	122.3	16.8	—	—	—	—	412.5	378.2	17.9	106	136
	S1	M1	138	291.5	—	368	108	17	429	20	103	135	—	—	—	—	—
		ME1	138	291.5	—	368	108	17	429	20	103	135	—	—	—	—	—
		MX1	138	291.5	—	368	108	17	429	20	103	135	—	—	—	—	—
	SX10	MXN10	138	291.5	397	377.5	123.3	19.4	—	—	—	—	433	398.1	21.8	106	138
	S2	ME2S	156	300.5	—	397	119	21	467	22.8	129	143	—	—	—	—	—
		MX2S	156	300.5	—	441	119	26	513	30	129	143	—	—	—	—	—
	SX20	MXN20	158	301.5	494.5	478.2	132.8	28.2	—	—	—	—	535.5	497.3	30.4	115	148
	S3	ME3S	195	320	—	440	142	26	536	32.1	160	155	—	—	—	—	—
		MX3S	195	320	—	472	142	29	562	37.1	160	155	—	—	—	—	—
		ME3L	195	320	—	472	142	33	563	38.6	160	155	—	—	—	—	—
		MX3L	195	320	—	516	142	39	608	46.1	160	155	—	—	—	—	—
F 25 4	S05	M05	121	283	—	394.5	95	17	460.5	18	96	122	—	—	—	—	—
		ME05	121	283	—	394.5	95	17	460.5	18	96	119	—	—	—	—	—
		MX05	121	283	—	394.5	95	17	460.5	18	96	119	—	—	—	—	—
	SX05	MXN05	123	284	441	419	122.3	18.8	—	—	—	—	468	433.7	19.9	106	136
	S1	M1	138	291.5	—	423.5	108	19	484.5	21	103	135	—	—	—	—	—
		ME1	138	291.5	—	423.5	108	19	484.5	21	103	135	—	—	—	—	—
		MX1	138	291.5	—	423.5	108	19	484.5	21	103	135	—	—	—	—	—
	SX10	MXN10	138	291.5	452.5	433	123.3	21.4	—	—	—	—	488.5	453.6	23.8	106	138
	S2	ME2S	156	300.5	—	452.5	119	22	495.5	24.8	129	143	—	—	—	—	—
		MX2S	156	300.5	—	496.5	119	27	568.5	32	129	143	—	—	—	—	—
	SX20	MXN20	158	301.5	550	533.7	132.8	29.2	—	—	—	—	591	552.8	31.4	115	148
	S3	ME3S	195	320	—	495.5	142	27	591.5	34.1	160	155	—	—	—	—	—
		MX3S	195	320	—	527.5	142	30	617.5	39.1	160	155	—	—	—	—	—
		ME3L	195	320	—	527.5	142	34	618.5	40.6	160	155	—	—	—	—	—
		MX3L	195	320	—	571.5	142	40	663.5	48.1	160	155	—	—	—	—	—

F 25...P(IEC)

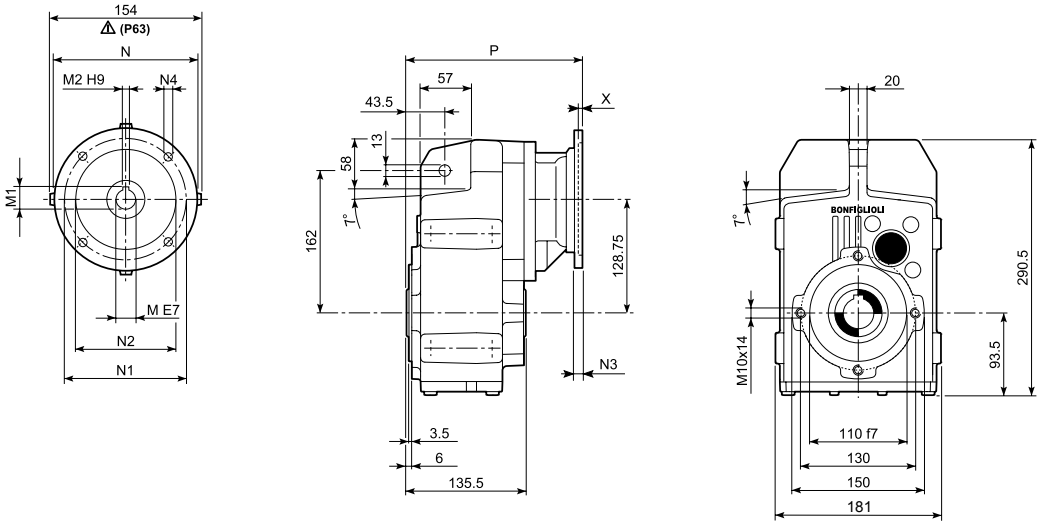

		M	M1	M2	N	N1	N2	N3	N4	X	P	Kg
F 25 2/3	**P63**	11	12.8	4	140	115	95	—	M8x19	4	213	12
F 25 2/3	**P71**	14	16.3	5	160	130	110	—	M8x16	4.5	213	12
F 25 2/3	**P80**	19	21.8	6	200	165	130	—	M10x14.5	4	232.5	13
F 25 2/3	**P90**	24	27.3	8	200	165	130	—	M10x14.5	4	232.5	13
F 25 2/3	**P100**	28	31.3	8	250	215	180	—	M12x16	4.5	242.5	16
F 25 2/3	**P112**	28	31.3	8	250	215	180	—	M12x16	4.5	242.5	16
F 25 4	**P63**	11	12.8	4	140	115	95	—	M8x19	4	268.5	13
F 25 4	**P71**	14	16.3	5	160	130	110	—	M8x16	4.5	268.5	13
F 25 4	**P80**	19	21.8	6	200	165	130	—	M10x14.5	4	288	14
F 25 4	**P90**	24	27.3	8	200	165	130	—	M10x14.5	4	288	14
F 25 4	**P100**	28	31.3	8	250	215	180	—	M12x16	4.5	298	18
F 25 4	**P112**	28	31.3	8	250	215	180	—	M12x16	4.5	298	18

F 25...HS

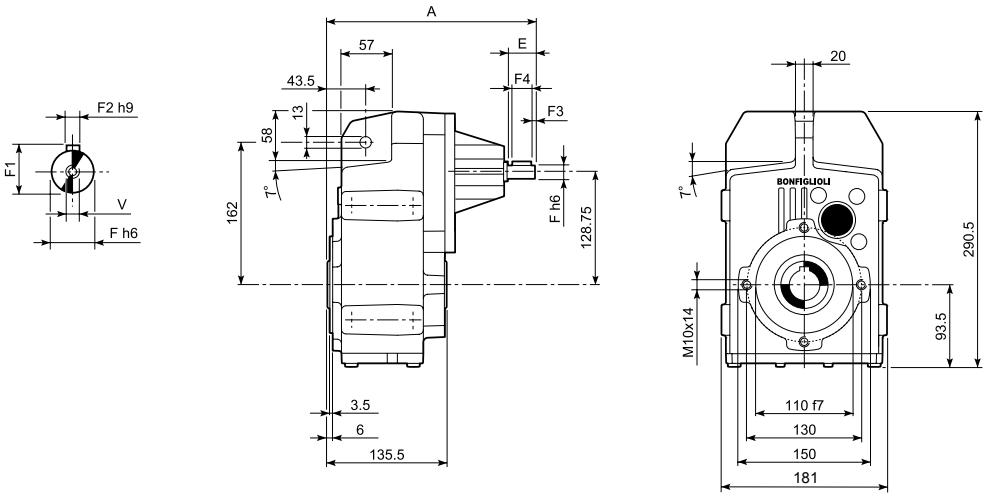

		A	E	F	F1	F2	F3	F4	V	Kg
F 25 2	**HS**	263	40	19	21.5	6	2.5	35	M6x16	11.5
F 25 3		263	40	19	21.5	6	2.5	35	M6x16	11.5
F 25 4		275.5	40	16	18	5	2.5	35	M6x16	12.5

F 25...SK / SC

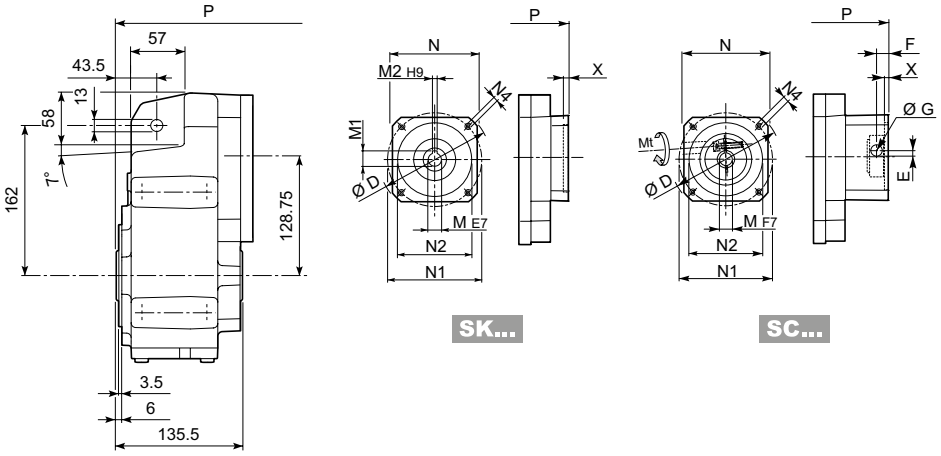

											2/3x		4x	
		D	M	M1	M2	N	N1	N2	N4	X	P	Kg	P	Kg
F 25 2/3/4	**SK 60A**	102	11	12.8	4	82	75	60	M5x10	3.5	184.5	11	240	12
F 25 2/3/4	**SK 60B**	102	14	16.3	5	82	75	60	M5x10	4	191.5	12	247	13
F 25 2/3/4	**SK 80A**	115	14	16.3	5	90	100	80	M6x12	4	191.5	12	247	13
F 25 2/3/4	**SK 80C**	120	19	21.8	6	96	100	80	M6x12	4	232.5	13	288	14
F 25 2/3/4	**SK 95A**	130	14	16.3	5	102	115	95	M8x12	4	232.5	13	288	14
F 25 2/3/4	**SK 95B**	130	19	21.8	6	102	115	95	M8x12	4	232.5	13	288	14
F 25 2/3/4	**SK 95C**	130	24	27.3	8	102	115	95	M8x12	4	232.5	13	288	14
F 25 2/3/4	**SK 110A**	150	19	21.8	6	120	130	110	M8x12	5	232.5	13	288	14
F 25 2/3/4	**SK 110B**	150	24	27.3	8	120	130	110	M8x12	5	232.5	13	288	14

														2/3x		4x	
			Mt [Nm]	D	E	F	G	M	N	N1	N2	N4	X	P	Kg	P	Kg
F 25 2/3/4	**SC 60A**	M6	15	102	7	12.5	12.5	11	82	75	60	M5x10	4	211.5	12	267	13
F 25 2/3/4	**SC 60B**	M6	15	102	7	12.5	12.5	14	82	75	60	M5x10	4	211.5	13	267	14
F 25 2/3/4	**SC 80A**	M6	15	115	6	12.5	12.5	14	90	100	80	M6x12	4	211.5	13	267	14
F 25 2/3/4	**SC 80C**	M6	15	120	15.5	14.5	17.75	19	96	100	80	M6x12	4	256	14	311.5	15
F 25 2/3/4	**SC 95A**	M6	15	130	16.5	15	17.75	14	102	115	95	M8x16	4	256	14	311.5	15
F 25 2/3/4	**SC 95B**	M6	15	130	16.5	15	17.75	19	102	115	95	M8x16	4	256	14	311.5	15
F 25 2/3/4	**SC 95C**	M6	15	130	16.5	15	17.75	24	102	115	95	M8x16	4	256	14	311.5	15
F 25 2/3/4	**SC 110A**	M6	15	150	16.5	16	17.75	19	120	130	110	M8x16	5	256	15	311.5	16
F 25 2/3/4	**SC 110B**	M6	15	150	16.5	16	17.75	24	120	130	110	M8x16	5	256	15	311.5	16

F 25

F 25...H

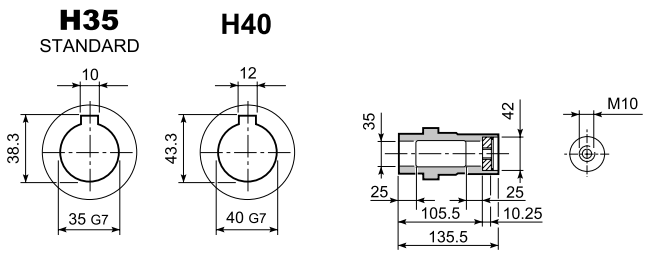

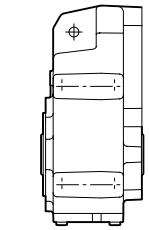

F 25...S

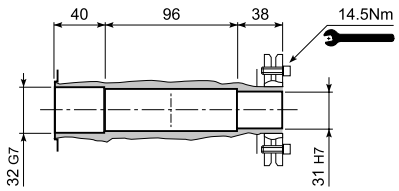

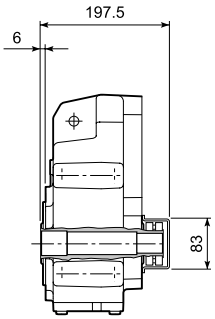

F 25...R

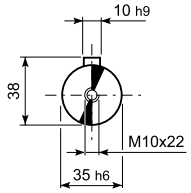

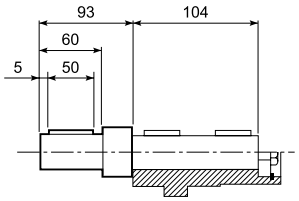

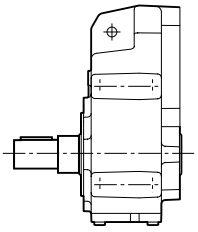

F 25...QF

	Ø
QF30	30
QF32	32

$M_{n2\ max}$ [Nm]	
F 25 QF30	350

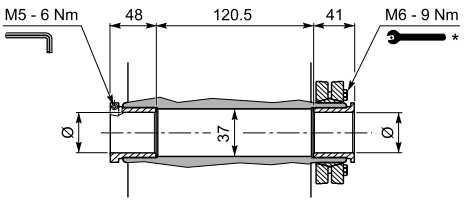

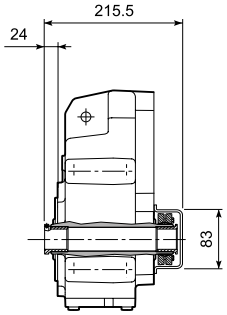

F 25...F...

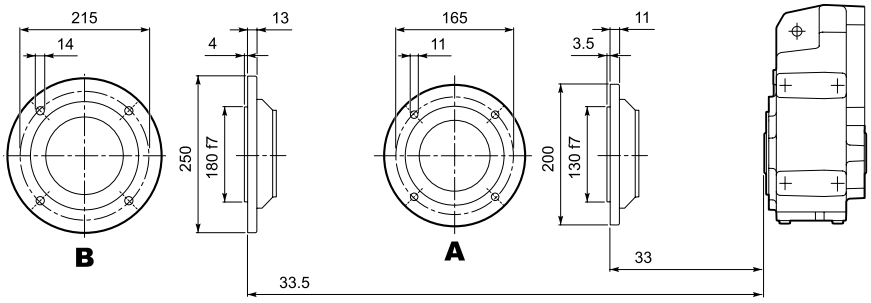

* Follow the MOUNTING INSTRUCTIONS supplied with the gearbox.

F 31...M/ME/MX/MXN

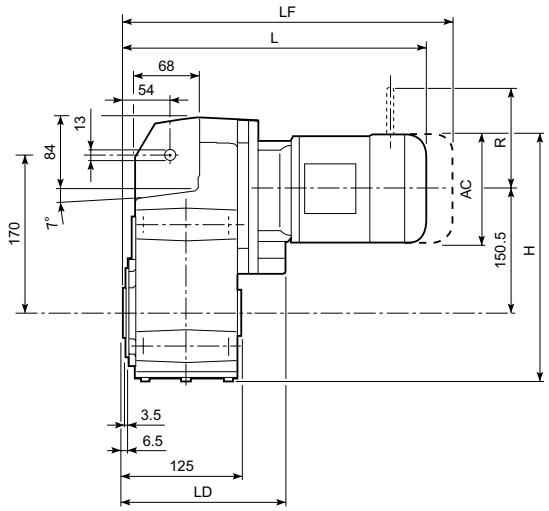

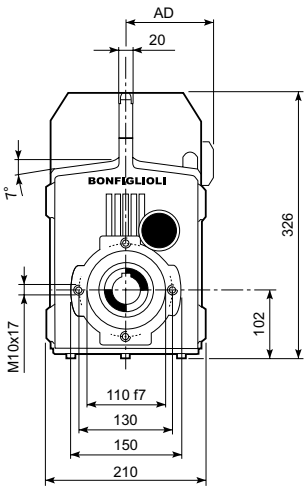

				Gearmotor - Without brake							Gearmotor - With brake								
											M...FD				M...FDD				
				AC	H	L		LD	AD	Kg	LF	Kg	R	AD	LF		Kg	R	AD
						plastic	metal								plastic	metal			
F 31 2/3	S1	M1		138	321.3	—	380.5	183.5	108	22	441.5	25	103	135	—	—	—	—	—
		ME1		138	321.3	—	380.5	183.5	108	22	441.5	25	103	135	—	—	—	—	—
		MX1		138	321.3	—	380.5	183.5	108	22	441.5	25	103	135	—	—	—	—	—
	SX10	MXN10		138	350.3	380.5	361	183.5	123.3	24.4	—	—	—	—	416.5	381.6	26.8	106	138
	S2	ME2S		156	330.3	—	409.5	195.5	119	26	479.5	27.8	129	143	—	—	—	—	—
		MX2S		156	330.3	—	453.5	195.5	119	31	525.5	35	129	143	—	—	—	—	—
	S3	ME3S		195	349.8	—	452.5	205.5	142	31	548.5	37.1	160	155	—	—	—	—	—
		MX3S		195	349.8	—	484.5	205.5	142	34	574.5	42.1	160	155	—	—	—	—	—
		ME3L		195	349.8	—	484.5	205.5	142	40	575.5	43.6	160	155	—	—	—	—	—
		MX3L		195	349.8	—	528.5	205.5	142	46	620.5	51.1	160	155	—	—	—	—	—
	S4	ME4	MX4	258	381.3	—	592.5	—	193	72	701.5	81.1	204	210	—	—	—	—	—
		ME4LA	MX4LA	258	381.3	—	592.5	—	193	78	690.5	95.1	226	210	—	—	—	—	—
F 31 4	S05	M05		121	312.8	—	409	—	95	20	475	22	96	122	—	—	—	—	—
		ME05		121	312.8	—	409	—	95	20	475	22	96	119	—	—	—	—	—
		MX05		121	312.8	—	409	—	95	20	475	22	96	119	—	—	—	—	—
	SX05	MXN05		123	360.3	409	387	—	122.3	21.8	—	—	—	—	436	401.7	22.9	106	136
	S1	M1		138	321.3	—	438	—	108	22	499	25	103	135	—	—	—	—	—
		ME1		138	321.3	—	438	—	108	22	499	25	103	135	—	—	—	—	—
		MX1		138	321.3	—	438	—	108	22	499	25	103	135	—	—	—	—	—
	SX10	MXN10		138	350.3	438	418.5	—	123.3	24.4	—	—	—	—	474	439.1	26.8	106	138
	S2	ME2S		156	330.3	—	467	—	119	26	537	27.8	129	143	—	—	—	—	—
		MX2S		156	330.3	—	511	—	119	31	583	35	129	143	—	—	—	—	—
	SX20	MXN20		158	368.8	511	494.7	—	132.8	33.3	—	—	—	—	552	513.8	35.5	115	148
	S3	ME3S		195	349.8	—	510	—	142	31	606	37.1	160	155	—	—	—	—	—
		MX3S		195	349.8	—	542	—	142	34	632	42.1	160	155	—	—	—	—	—
		ME3L		195	349.8	—	542	—	142	41	633	43.6	160	155	—	—	—	—	—
		MX3L		195	349.8	—	586	—	142	47	678	51.1	160	155	—	—	—	—	—

F 31...P(IEC)

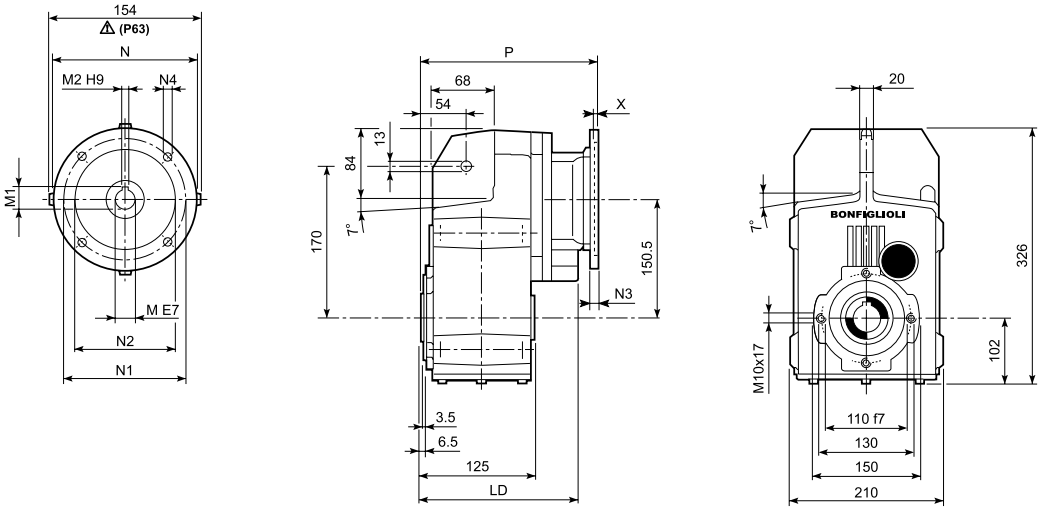

		LD	M	M1	M2	N	N1	N2	N3	N4	X	P	Kg
F 31 2/3	**P63**	195.5	11	12.8	4	140	115	95	—	M8x19	4	225.5	17
F 31 2/3	**P71**	195.5	14	16.3	5	160	130	110	—	M8x16	4.5	225.5	17
F 31 2/3	**P80**	205.5	19	21.8	6	200	165	130	—	M10x14.5	4	245	18
F 31 2/3	**P90**	205.5	24	27.3	8	200	165	130	—	M10x14.5	4	245	17
F 31 2/3	**P100**	205.5	28	31.3	8	250	215	180	—	M12x16	4.5	255	21
F 31 2/3	**P112**	205.5	28	31.3	8	250	215	180	—	M12x16	4.5	255	21
F 31 2/3	**P132**	—	38	41.3	10	300	265	230	—	14	5	291.5	24
F 31 4	**P63**	—	11	12.8	4	140	115	95	—	M8x19	4	283	17
F 31 4	**P71**	—	14	16.3	5	160	130	110	—	M8x16	4.5	283	17
F 31 4	**P80**	—	19	21.8	6	200	165	130	—	M10x14.5	4	302.5	18
F 31 4	**P90**	—	24	27.3	8	200	165	130	—	M10x14.5	4	302.5	18
F 31 4	**P100**	—	28	31.3	8	250	215	180	—	M12x16	4.5	312.5	22
F 31 4	**P112**	—	28	31.3	8	250	215	180	—	M12x16	4.5	312.5	22

F 31...HS

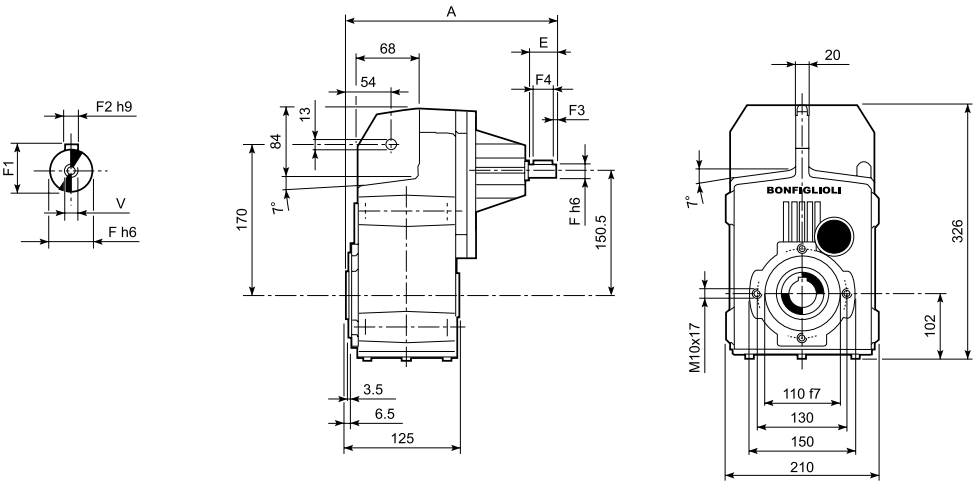

		A	E	F	F1	F2	F3	F4	V	Kg
F 31 2	**HS**	275.5	40	19	21.5	6	2.5	35	M6x16	16.7
F 31 3		275.5	40	19	21.5	6	2.5	35	M6x16	16.7
F 31 4		290	40	16	18	5	2.5	35	M6x16	16.5

F 31...SK / SC

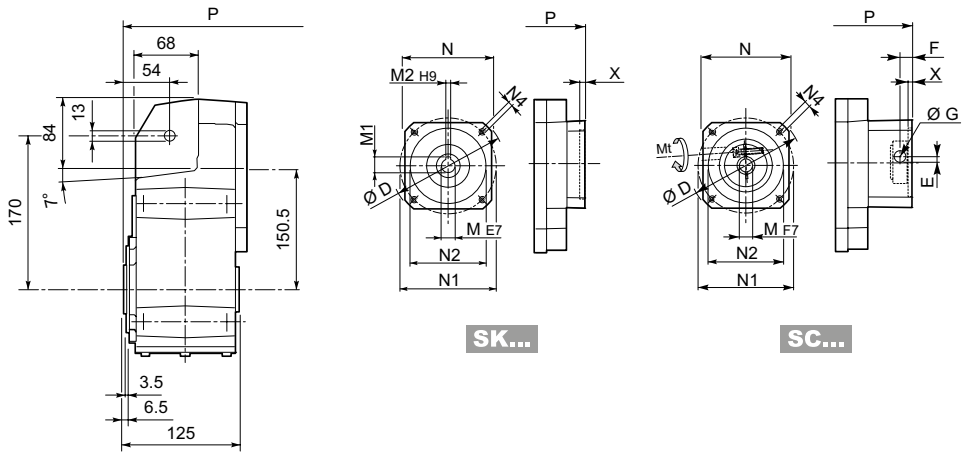

											2/3x		4x	
		D	M	M1	M2	N	N1	N2	N4	X	P	Kg	P	Kg
F 31 2/3/4	**SK 60A**	102	11	12.8	4	82	75	60	M5x10	3.5	197	16	254.5	16
F 31 2/3/4	**SK 60B**	102	14	16.3	5	82	75	60	M5x10	4	204	17	261.5	17
F 31 2/3/4	**SK 80A**	115	14	16.3	5	90	100	80	M6x12	4	204	17	261.5	17
F 31 2/3/4	**SK 80C**	120	19	21.8	6	96	100	80	M6x12	4	245	18	302.5	18
F 31 2/3/4	**SK 95A**	130	14	16.3	5	102	115	95	M8x12	4	245	18	302.5	18
F 31 2/3/4	**SK 95B**	130	19	21.8	6	102	115	95	M8x12	4	245	18	302.5	18
F 31 2/3/4	**SK 95C**	130	24	27.3	8	102	115	95	M8x12	4	245	18	302.5	18
F 31 2/3/4	**SK 110A**	150	19	21.8	6	120	130	110	M8x12	5	245	18	302.5	18
F 31 2/3/4	**SK 110B**	150	24	27.3	8	120	130	110	M8x12	5	245	18	302.5	18
F 31 2/3	**SK 130A**	188	24	27.3	8	142	165	130	M10x20	5	245	18	—	—

														2/3x		4x	
			Mt [Nm]	D	E	F	G	M	N	N1	N2	N4	X	P	Kg	P	Kg
F 31 2/3/4	**SC 60A**	M6	15	102	7	12.5	12.5	11	82	75	60	M5x10	4	224	17	281.5	17
F 31 2/3/4	**SC 60B**	M6	15	102	7	12.5	12.5	14	82	75	60	M5x10	4	224	18	281.5	18
F 31 2/3/4	**SC 80A**	M6	15	115	6	12.5	12.5	14	90	100	80	M6x12	4	224	18	281.5	18
F 31 2/3/4	**SC 80C**	M6	15	120	15.5	14.5	17.75	19	96	100	80	M6x12	4	268.5	19	326	19
F 31 2/3/4	**SC 95A**	M6	15	130	16.5	15	17.75	14	102	115	95	M8x16	4	268.5	19	326	19
F 31 2/3/4	**SC 95B**	M6	15	130	16.5	15	17.75	19	102	115	95	M8x16	4	268.5	19	326	19
F 31 2/3/4	**SC 95C**	M6	15	130	16.5	15	17.75	24	102	115	95	M8x16	4	268.5	19	326	19
F 31 2/3/4	**SC 110A**	M6	15	150	16.5	16	17.75	19	120	130	110	M8x16	5	268.5	20	326	20
F 31 2/3/4	**SC 110B**	M6	15	150	16.5	16	17.75	24	120	130	110	M8x16	5	268.5	20	326	20
F 31 2/3	**SC 130A**	M6	15	188	19	16	17.75	24	142	165	130	M10x20	5	268.5	21	—	—

F 31

F 31...H

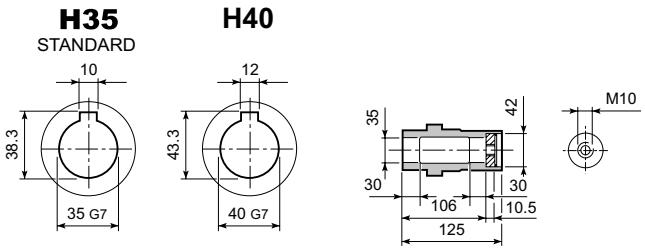

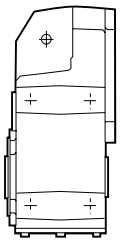

F 31...S

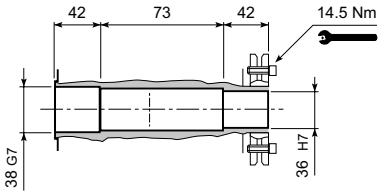

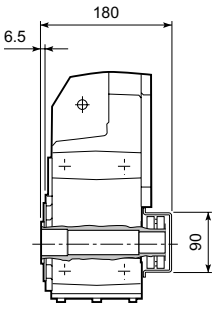

F 31...R

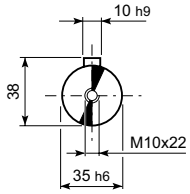

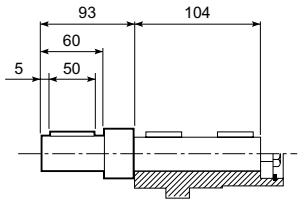

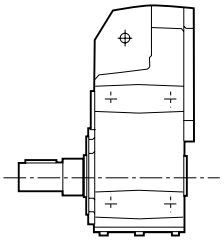

F 31...QF

	Ø
QF35	35
QF40	40

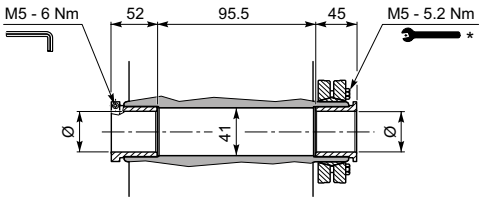

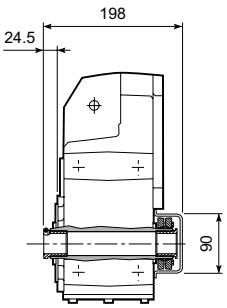

F 31...F...

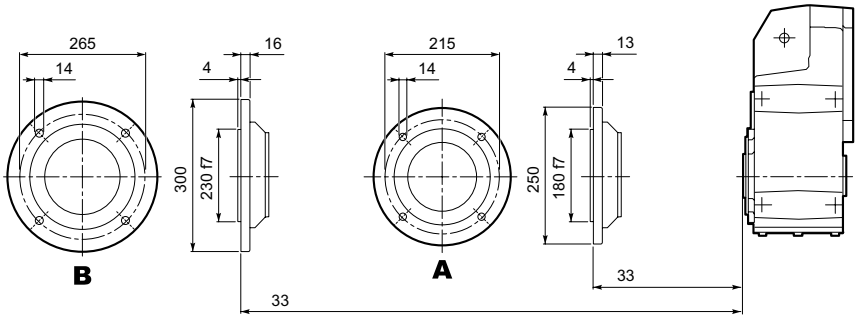

* Follow the MOUNTING INSTRUCTIONS supplied with the gearbox.

F 41...M/ME/MX/MXN

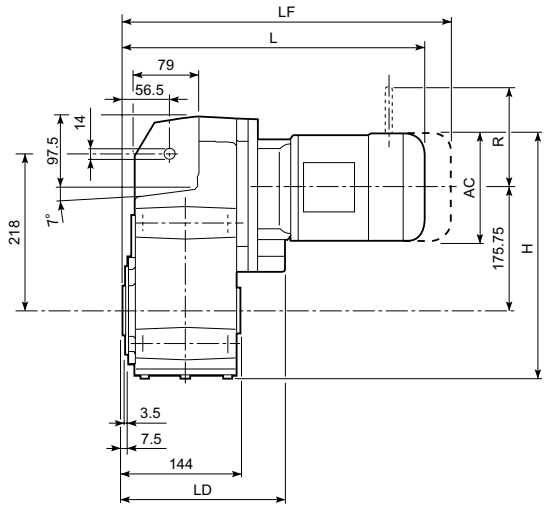

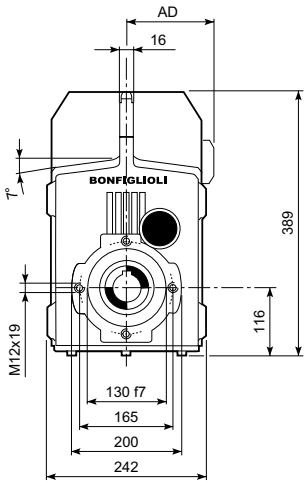

				Gearmotor - Without brake							Gearmotor - With brake								
											M...FD				M...FDD				
				AC	H	L		LD	AD	Kg	LF	Kg	R	AD	LF		Kg	R	AD
						plastic	metal								plastic	metal			
F 41 2/3	S1	M1		138	360.8	—	401	199.5	108	46	462	48	103	135	—	—	—	—	—
		ME1		138	360.8	—	401	199.5	108	46	462	48	103	135	—	—	—	—	—
		MX1		138	360.8	—	401	199.5	108	46	462	48	103	135	—	—	—	—	—
	S2	ME2S		156	369.8	—	430	215	119	49	500	51.8	129	143	—	—	—	—	—
		MX2S		156	369.8	—	474	215	119	54	604	59	129	143	—	—	—	—	—
	S3	ME3S		195	389.3	—	473	231	142	54	569	61.1	160	155	—	—	—	—	—
		MX3S		195	389.3	—	505	231	142	57	595	66.1	160	155	—	—	—	—	—
		ME3L		195	389.3	—	505	231	142	64	596	67.6	160	155	—	—	—	—	—
		MX3L		195	389.3	—	549	231	142	70	641	75.1	160	155	—	—	—	—	—
	S4	ME4	MX4	258	420.8	—	613	—	193	96	722	105.1	204	210	—	—	—	—	—
		ME4LB	MX4LA	258	420.8	—	648	—	193	104	746	119.1	226	210	—	—	—	—	—
F 41 4	S05	M05		121	352.3	—	433.5	—	95	45	499.5	46	96	122	—	—	—	—	—
		ME05		121	352.3	—	433.5	—	95	45	499.5	46	96	119	—	—	—	—	—
		MX05		121	352.3	—	433.5	—	95	45	499.5	46	96	119	—	—	—	—	—
	SX05	MXN05		123	353.3	480	458	—	122.3	46.8	—	—	—	—	507	472.7	47.9	106	136
	S1	M1		138	360.8	—	462.5	—	108	47	523.5	49	103	135	—	—	—	—	—
		ME1		138	360.8	—	462.5	—	108	47	523.5	49	103	135	—	—	—	—	—
		MX1		138	360.8	—	462.5	—	108	47	523.5	49	103	135	—	—	—	—	—
	SX10	MXN10		138	360.8	491.5	472	—	123.3	49.4	—	—	—	—	527.5	492.6	51.8	106	138
	S2	ME2S		156	369.8	—	491.5	—	119	50	561.5	52.8	129	143	—	—	—	—	—
		MX2S		156	369.8	—	535.5	—	119	55	607.5	60	129	143	—	—	—	—	—
	SX20	MXN20		158	370.8	589	572.7	—	132.8	57.2	—	—	—	—	630	591.8	59.4	115	148
	S3	ME3S		195	389.3	—	534.5	—	142	55	630.5	62.1	160	155	—	—	—	—	—
		MX3S		195	389.3	—	566.5	—	142	58	656.5	67.1	160	155	—	—	—	—	—
		ME3L		195	389.3	—	566.5	—	142	65	657.5	68.6	160	155	—	—	—	—	—
		MX3L		195	389.3	—	610.5	—	142	71	702.5	76.1	160	155	—	—	—	—	—

F 41...P(IEC)

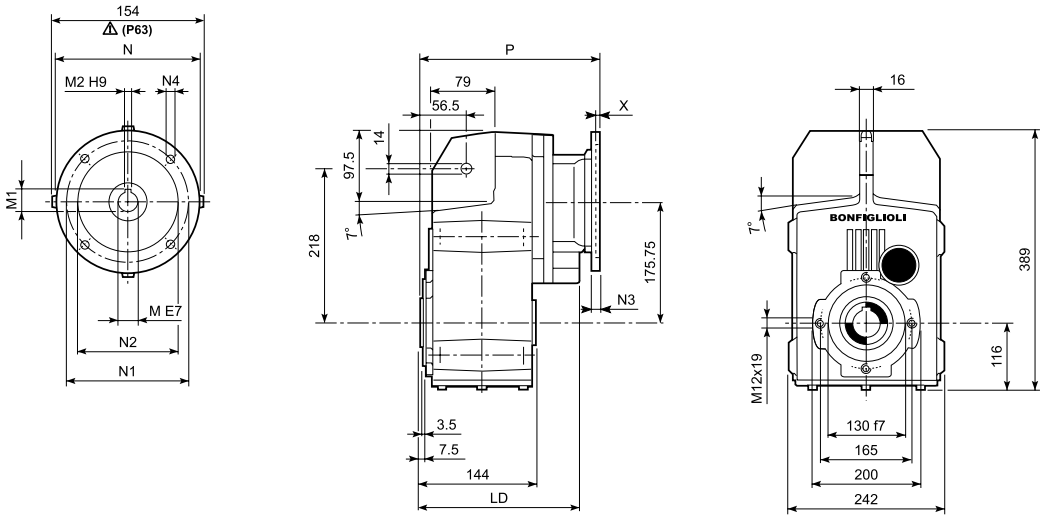

		LD	M	M1	M2	N	N1	N2	N3	N4	X	P	Kg
F 41 2/3	**P63**	215	11	12.8	4	140	115	95	—	M8x19	4	246	42
F 41 2/3	**P71**	215	14	16.3	5	160	130	110	—	M8x16	4.5	246	42
F 41 2/3	**P80**	231	19	21.8	6	200	165	130	—	M10x14.5	4	265.5	43
F 41 2/3	**P90**	231	24	27.3	8	200	165	130	—	M10x14.5	4	265.5	43
F 41 2/3	**P100**	231	28	31.3	8	250	215	180	—	M12x16	4.5	275.5	47
F 41 2/3	**P112**	231	28	31.3	8	250	215	180	—	M12x16	4.5	275.5	47
F 41 2/3	**P132**	—	38	41.3	10	300	265	230	16	14	5	312	50
F 41 4	**P63**	—	11	12.8	4	140	115	95	—	M8x19	4	307.5	44
F 41 4	**P71**	—	14	16.3	5	160	130	110	—	M8x16	4.5	307.5	44
F 41 4	**P80**	—	19	21.8	6	200	165	130	—	M10x14.5	4	327	45
F 41 4	**P90**	—	24	27.3	8	200	165	130	—	M10x14.5	4	327	45
F 41 4	**P100**	—	28	31.3	8	250	215	180	—	M12x16	4.5	337	49
F 41 4	**P112**	—	28	31.3	8	250	215	180	—	M12x16	4.5	337	49

F 41...HS

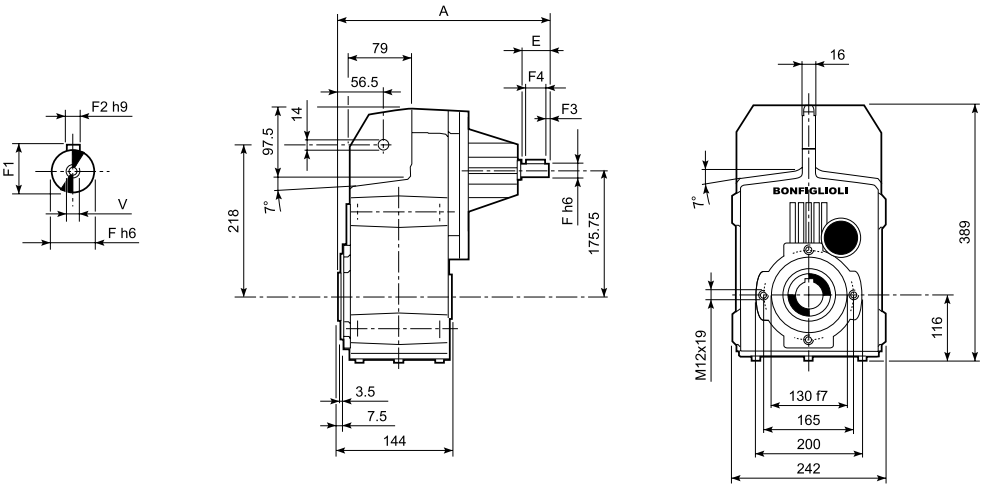

		A	E	F	F1	F2	F3	F4	V	Kg
F 41 2	**HS**	335.5	50	24	27	8	2.5	45	M8x19	44.9
F 41 3		335.5	50	24	27	8	2.5	45	M8x19	46.4
F 41 4		357.5	40	19	21.5	6	2.5	35	M6x16	43.5

F 41...SK / SC

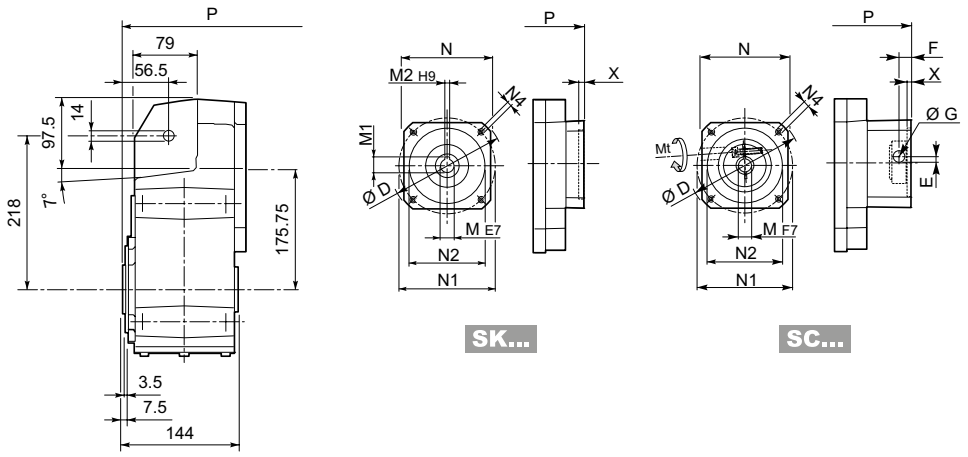

											2/3x		4x	
		D	M	M1	M2	N	N1	N2	N4	X	P	Kg	P	Kg
F 41 4	**SK 60A**	102	11	12.8	4	82	75	60	M5x10	3.5	—	—	279	43
F 41 4	**SK 60B**	102	14	16.3	5	82	75	60	M5x10	4	—	—	286	44
F 41 4	**SK 80A**	115	14	16.3	5	90	100	80	M6x12	4	—	—	286	44
F 41 2/3	**SK 80B**	120	14	16.3	5	96	100	80	M6x12	4	265.5	43	—	—
F 41 2/3/4	**SK 80C**	120	19	21.8	6	96	100	80	M6x12	4	265.5	43	327	45
F 41 2/3/4	**SK 95A**	130	14	16.3	5	102	115	95	M8x12	4	265.5	43	327	45
F 41 2/3/4	**SK 95B**	130	19	21.8	6	102	115	95	M8x12	4	265.5	43	327	45
F 41 2/3/4	**SK 95C**	130	24	27.3	8	102	115	95	M8x12	4	265.5	43	327	45
F 41 2/3/4	**SK 110A**	150	19	21.8	6	120	130	110	M8x12	5	265.5	43	327	45
F 41 2/3/4	**SK 110B**	150	24	27.3	8	120	130	110	M8x12	5	265.5	43	327	45
F 41 2/3	**SK 130A**	188	24	27.3	8	142	165	130	M10x20	5	265.5	45	—	—
F 41 2/3	**SK 130B**	189	32	35.3	10	160	165	130	M10x20	5	312	47	—	—
F 41 2/3	**SK 180A**	240	32	35.3	10	192	215	180	M12x19	5	312	47	—	—
F 41 2/3	**SK 180B**	240	38	41.3	10	192	215	180	M12x19	5	312	47	—	—

														2/3x		4x	
			Mt [Nm]	D	E	F	G	M	N	N1	N2	N4	X	P	Kg	P	Kg
F 41 4	**SC 60A**	M6	15	102	7	12.5	12.5	11	82	75	60	M5x10	4	—	—	306	44
F 41 4	**SC 60B**	M6	15	102	7	12.5	12.5	14	82	75	60	M5x10	4	—	—	306	45
F 41 4	**SC 80A**	M6	15	115	6	12.5	12.5	14	90	100	80	M6x12	4	—	—	306	45
F 41 2/3	**SC 80B**	M6	15	120	15.5	14.5	17.75	14	96	100	80	M6x12	4	289	44	—	—
F 41 2/3/4	**SC 80C**	M6	15	120	15.5	14.5	17.75	19	96	100	80	M6x12	4	289	44	350.5	46
F 41 2/3/4	**SC 95A**	M6	15	130	16.5	15	17.75	14	102	115	95	M8x16	4	289	44	350.5	46
F 41 2/3/4	**SC 95B**	M6	15	130	16.5	15	17.75	19	102	115	95	M8x16	4	289	44	350.5	46
F 41 2/3/4	**SC 95C**	M6	15	130	16.5	15	17.75	24	102	115	95	M8x16	4	289	44	350.5	46
F 41 2/3/4	**SC 110A**	M6	15	150	16.5	16	17.75	19	120	130	110	M8x16	5	289	45	350.5	47
F 41 2/3/4	**SC 110B**	M6	15	150	16.5	16	17.75	24	120	130	110	M8x16	5	289	45	350.5	47
F 41 2/3	**SC 130A**	M6	15	188	19	16	17.75	24	142	165	130	M10x20	5	289	46	—	—
F 41 2/3	**SC 130B**	M8	36	189	20	17	17.75	32	160	165	130	M10x20	5	335	50	—	—
F 41 2/3	**SC 180A**	M8	36	240	20	17.5	17.75	32	192	215	180	M12x24	5	339	50	—	—
F 41 2/3	**SC 180B**	M8	36	240	20	17.5	17.75	38	192	215	180	M12x24	5	339	50	—	—

F 41...H

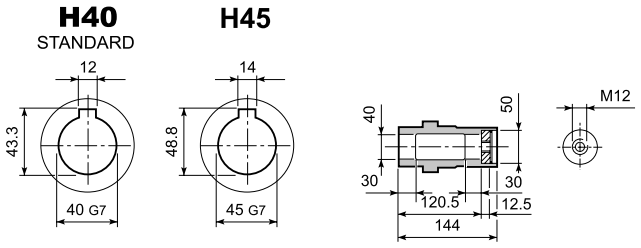

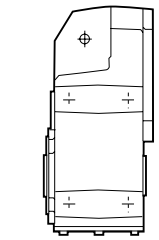

F 41...S

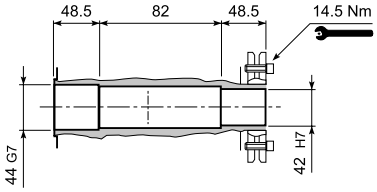

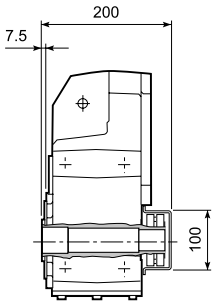

F 41...R

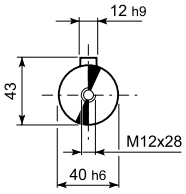

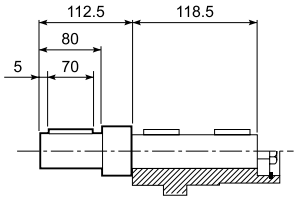

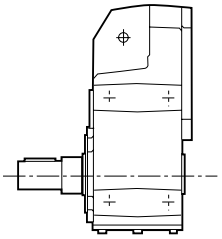

F 41...QF

	Ø
QF42	42
QF45	45

$M_{n2\ max}$ [Nm]	
F 41 QF42	850
F 41 QF45	1000

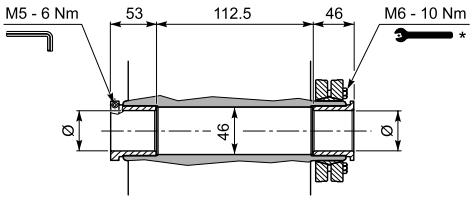

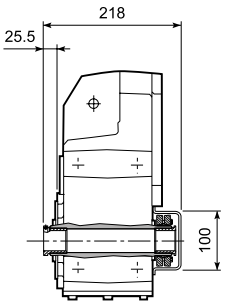

F 41...F...

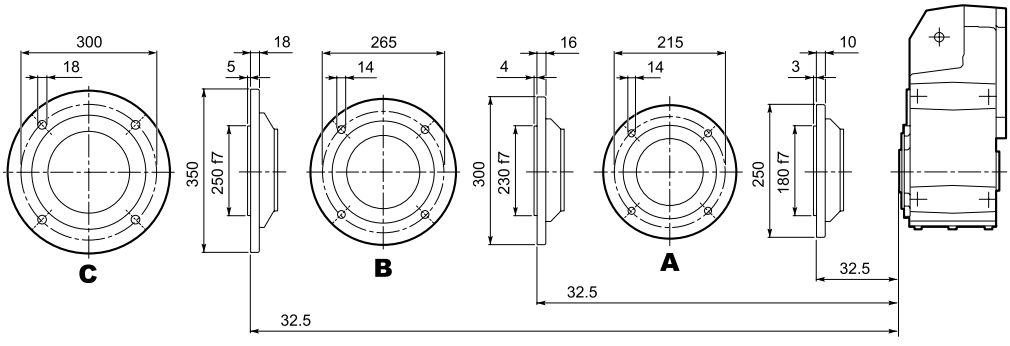

* Follow the MOUNTING INSTRUCTIONS supplied with the gearbox.

F 51...M/ME/MX/MXN

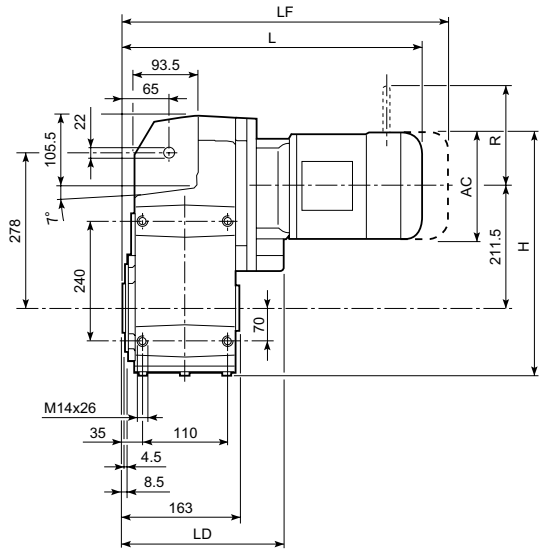

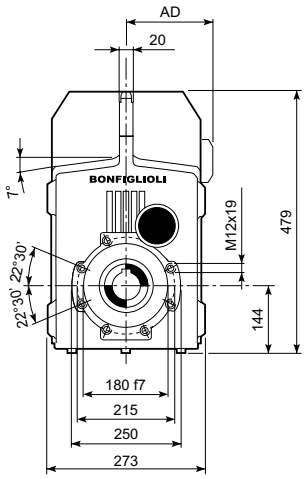

				Gearmotor - Without brake							Gearmotor - With brake								
											M...FD				M...FDD				
				AC	H	L plastic	L metal	LD	AD	Kg	LF	Kg	R	AD	LF plastic	LF metal	Kg	R	AD
F 51 2/3	S1	M1		138	424	—	423	—	108	73	484	76	103	135	—	—	—	—	—
		ME1		138	424	—	423	—	108	73	484	75	103	135	—	—	—	—	—
		MX1		138	424	—	423	—	108	73	484	75	103	135	—	—	—	—	—
	S2	ME2S		156	433	—	452	238	119	73	522	78.8	129	143	—	—	—	—	—
		MX2S		156	433	—	496	238	119	78	568	86	129	143	—	—	—	—	—
	S3	ME3S		195	452.5	—	495	253	142	77	591	88.1	160	155	—	—	—	—	—
		MX3S		195	452.5	—	527	253	142	80	617	93.1	160	155	—	—	—	—	—
		ME3L		195	452.5	—	527	253	142	87	618	94.6	160	155	—	—	—	—	—
		MX3L		195	452.5	—	571	253	142	93	663	102.1	160	155	—	—	—	—	—
	S4	ME4	MX4	258	484	—	635	238	193	119	744	132.1	204	210	—	—	—	—	—
		ME4LB	MX4LA	258	484	—	670	238	193	127	768	146.1	226	210	—	—	—	—	—
	S5	ME5S	MX5S	310	510	—	721.5	—	245	153	861.5	206.1	266	245	—	—	—	—	—
		ME5L	MX5L	310	510	—	765.5	—	245	169	899.5	217.1	266	245	—	—	—	—	—
F 51 4	S1	M1		138	424	—	494.5	—	108	75	555.5	78	103	135	—	—	—	—	—
		ME1		138	424	—	494.5	—	108	75	555.5	77	103	135	—	—	—	—	—
		MX1		138	424	—	494.5	—	108	75	555.5	77	103	135	—	—	—	—	—
	SX10	MXN10		138	424	523.5	504	—	123.3	77.4	—	—	—	—	559.5	524.6	79.8	106	138
	S2	ME2S		156	433	—	523.5	—	119	79	593.5	80.8	129	143	—	—	—	—	—
		MX2S		156	433	—	567.5	—	119	79	639.5	88	129	143	—	—	—	—	—
	S3	ME3S		195	452.5	—	566.5	—	142	84	662.5	90.1	160	155	—	—	—	—	—
		MX3S		195	452.5	—	598.5	—	142	84	688.5	95.1	160	155	—	—	—	—	—
		ME3L		195	452.5	—	598.5	—	142	93	689.5	96.6	160	155	—	—	—	—	—
		MX3L		195	452.5	—	642.5	—	142	93	734.5	104.1	160	155	—	—	—	—	—

F 51...P(IEC)

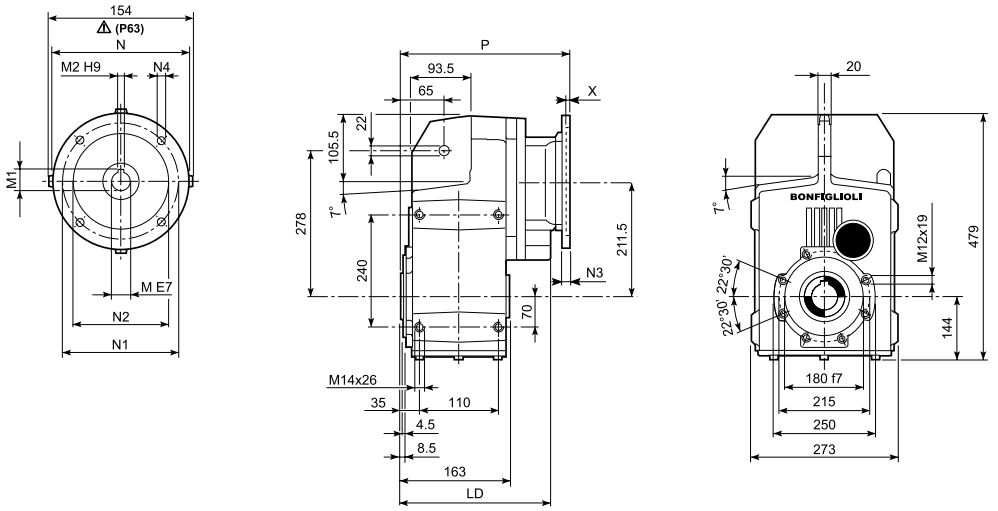

		LD	M	M1	M2	N	N1	N2	N3	N4	X	P	Kg
F 51 2/3	**P63**	238	11	12.8	4	140	115	95	—	M8x19	4	268	65
F 51 2/3	**P71**	238	14	16.3	5	160	130	110	—	M8x16	4.5	268	65
F 51 2/3	**P80**	253	19	21.8	6	200	165	130	—	M10x14.5	4	287.5	67
F 51 2/3	**P90**	253	24	27.3	8	200	165	130	—	M10x14.5	4	287.5	67
F 51 2/3	**P100**	238	28	31.3	8	250	215	180	—	M12x16	4.5	297.5	71
F 51 2/3	**P112**	238	28	31.3	8	250	215	180	—	M12x16	4.5	297.5	71
F 51 2/3	**P132**	238	38	41.3	10	300	265	230	16	14	5	334	74
F 51 2/3	**P160**	—	42	45.3	12	350	300	250	23	18	5.5	384.5	78
F 51 2/3	**P180**	—	48	51.8	14	350	300	250	23	18	5.5	384.5	78
F 51 4	**P63**	—	11	12.8	4	140	115	95	—	M8x19	4	339.5	70
F 51 4	**P71**	—	14	16.3	5	160	130	110	—	M8x16	4.5	339.5	70
F 51 4	**P80**	—	19	21.8	6	200	165	130	—	M10x14.5	4	359	71
F 51 4	**P90**	—	24	27.3	8	200	165	130	—	M10x14.5	4	359	71
F 51 4	**P100**	—	28	31.3	8	250	215	180	—	M12x16	4.5	369	75
F 51 4	**P112**	—	28	31.3	8	250	215	180	—	M12x16	4.5	369	75

F 51...HS

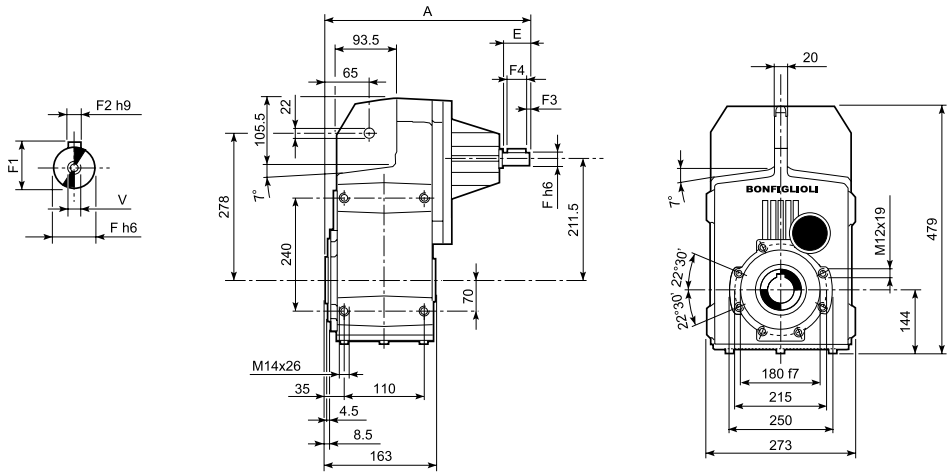

		A	E	F	F1	F2	F3	F4	V	Kg
F 51 2	**HS**	357.5	50	24	27	8	2.5	45	M8x19	65
F 51 3		357.5	50	24	27	8	2.5	45	M8x19	68
F 51 4		389.5	40	19	21.5	6	2.5	35	M6x16	70

F 51...SK / SC

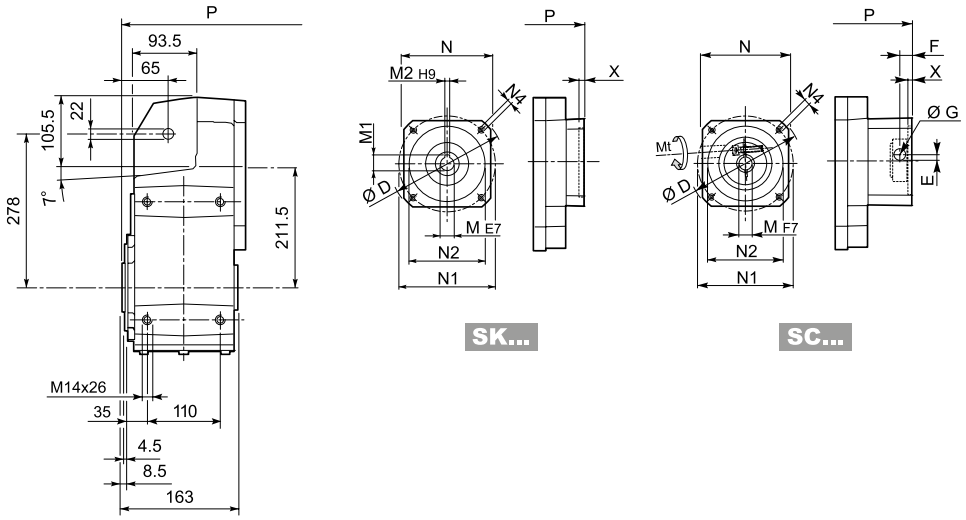

											2/3x		4x	
		D	M	M1	M2	N	N1	N2	N4	X	P	Kg	P	Kg
F 51 2/3	**SK 80B**	120	14	16.3	5	96	100	80	M6x12	4	287.5	67	—	—
F 51 2/3/4	**SK 80C**	120	19	21.8	6	96	100	80	M6x12	4	287.5	67	359	71
F 51 2/3/4	**SK 95A**	130	14	16.3	5	102	115	95	M8x12	4	287.5	67	359	71
F 51 2/3/4	**SK 95B**	130	19	21.8	6	102	115	95	M8x12	4	287.5	67	359	71
F 51 2/3/4	**SK 95C**	130	24	27.3	8	102	115	95	M8x12	4	287.5	67	359	71
F 51 2/3/4	**SK 110A**	150	19	21.8	6	120	130	110	M8x12	5	287.5	67	359	71
F 51 2/3/4	**SK 110B**	150	24	27.3	8	120	130	110	M8x12	5	287.5	67	359	71
F 51 2/3/4	**SK 130A**	188	24	27.3	8	142	165	130	M10x20	5	287.5	69	359	73
F 51 2/3	**SK 130B**	189	32	35.3	10	160	165	130	M10x20	5	334	75	—	—
F 51 2/3	**SK 180A**	240	32	35.3	10	192	215	180	M12x19	5	334	75	—	—
F 51 2/3	**SK 180B**	240	38	41.3	10	192	215	180	M12x19	5	334	75	—	—

														2/3x		4x	
			Mt [Nm]	D	E	F	G	M	N	N1	N2	N4	X	P	Kg	P	Kg
F 51 2/3	**SC 80B**	M6	15	120	15.5	14.5	17.75	14	96	100	80	M6x12	4	311	70	—	—
F 51 2/3/4	**SC 80C**	M6	15	120	15.5	14.5	17.75	19	96	100	80	M6x12	4	311	70	382.5	74
F 51 2/3/4	**SC 95A**	M6	15	130	16.5	15	17.75	14	102	115	95	M8x16	4	311	70	382.5	74
F 51 2/3/4	**SC 95B**	M6	15	130	16.5	15	17.75	19	102	115	95	M8x16	4	311	70	382.5	74
F 51 2/3/4	**SC 95C**	M6	15	130	16.5	15	17.75	24	102	115	95	M8x16	4	311	70	382.5	74
F 51 2/3/4	**SC 110A**	M6	15	150	16.5	16	17.75	19	120	130	110	M8x16	5	311	71	382.5	75
F 51 2/3/4	**SC 110B**	M6	15	150	16.5	16	17.75	24	120	130	110	M8x16	5	311	71	382.5	75
F 51 2/3/4	**SC 130A**	M6	15	188	19	16	17.75	24	142	165	130	M10x20	5	311	72	382.5	76
F 51 2/3	**SC 130B**	M8	36	189	20	17	17.75	32	160	165	130	M10x20	5	357	75	—	—
F 51 2/3	**SC 180A**	M8	36	240	20	17.5	17.75	32	192	215	180	M12x24	5	361	75	—	—
F 51 2/3	**SC 180B**	M8	36	240	20	17.5	17.75	38	192	215	180	M12x24	5	361	75	—	—

F 51

F 51...H

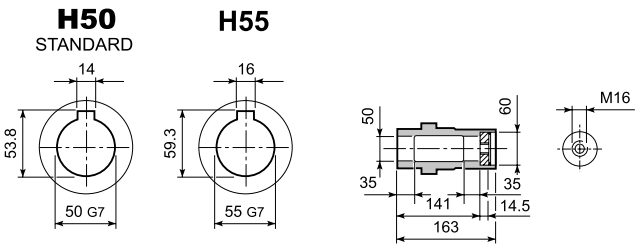

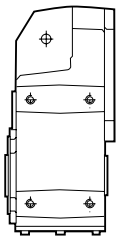

F 51...S

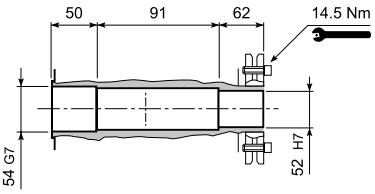

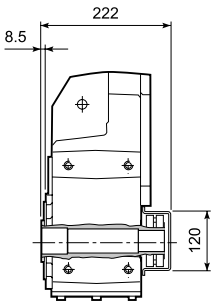

F 51...R

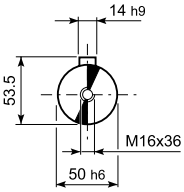

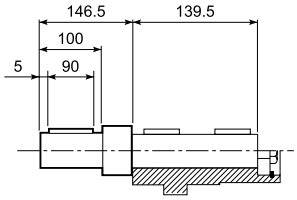

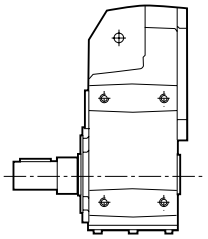

F 51...QF

	Ø
QF50	50
QF55	55

$M_{n2\ max}$ [Nm]	
F 51 QF50	1750

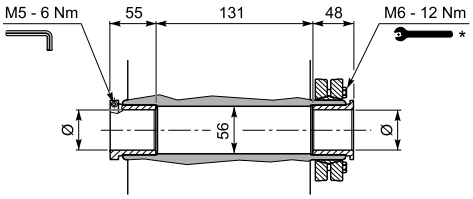

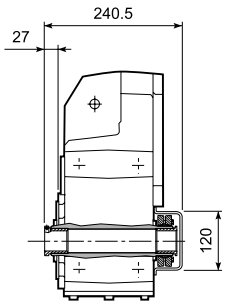

F 51...F...

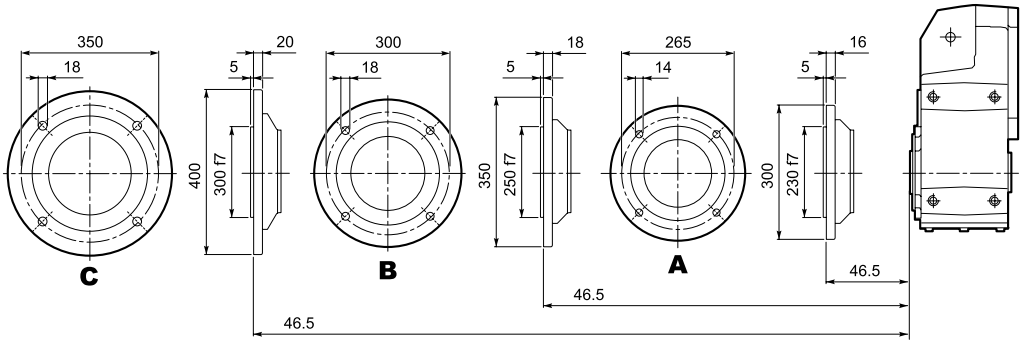

* Follow the MOUNTING INSTRUCTIONS supplied with the gearbox.

F 60...M/ME/MX

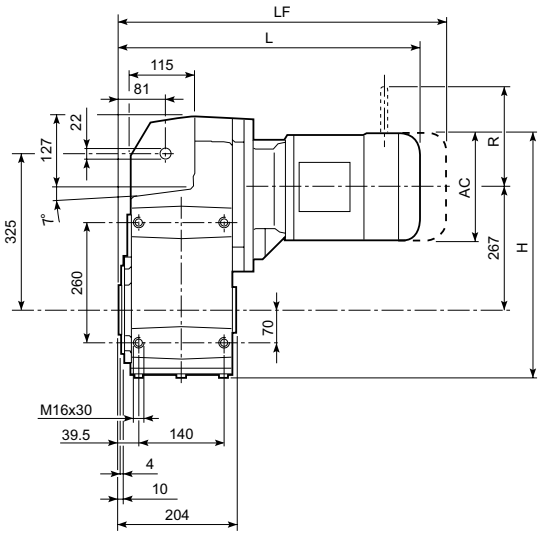

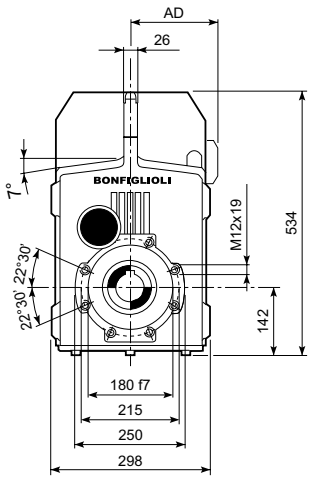

				Gearmotor - Without brake					Gearmotor - With brake			
									M...FD			
				AC	H	L	AD	Kg	LF	Kg	R	AD
F 60 3	S2	ME2S		156	487	486.5	119	114	556.5	116.1	129	143
		MX2S		156	487	530.5	119	119	602.5	123.3	129	143
	S3	ME3S		195	506.5	529.5	142	119	625.5	125.4	160	155
		MX3S		195	506.5	561.5	142	122	639.5	130.4	160	155
		ME3L		195	506.5	561.5	142	124	652.5	131.9	160	155
		MX3L		195	506.5	605.5	142	130	681.5	139.4	160	155
	S4	ME4	MX4	258	538	669.5	193	156	754.5	169.4	204	210
		ME4LB	MX4LA	258	538	704.5	193	164	779.5	183.4	226	210
	S5	ME5S	MX5S	310	564	756	245	184	842.5	243.4	266	245
		ME5L	MX5L	310	564	800	245	200	886.5	254.4	266	245
F 60 4	S1	M1		138	478	528	108	113	589	116	103	135
		ME1		138	478	528	108	113	589	116	103	135
		MX1		138	478	528	108	113	589	116	103	135
	S2	ME2S		156	487	557	119	117	627	118.8	129	143
		MX2S		156	487	601	119	122	659	126	129	143
	S3	ME3S		195	506.5	600	142	122	696	128.1	160	155
		MX3S		195	506.5	632	142	125	696	133.1	160	155
		ME3L		195	506.5	632	142	131	723	134.6	160	155
		MX3L		195	506.5	676	142	137	738	142.1	160	155
	S4	ME4	MX4	258	538	740	193	156	811	172.1	204	210
		ME4LB	MX4LA	258	538	775	193	164	836	186.1	226	210

F 60...P(IEC)

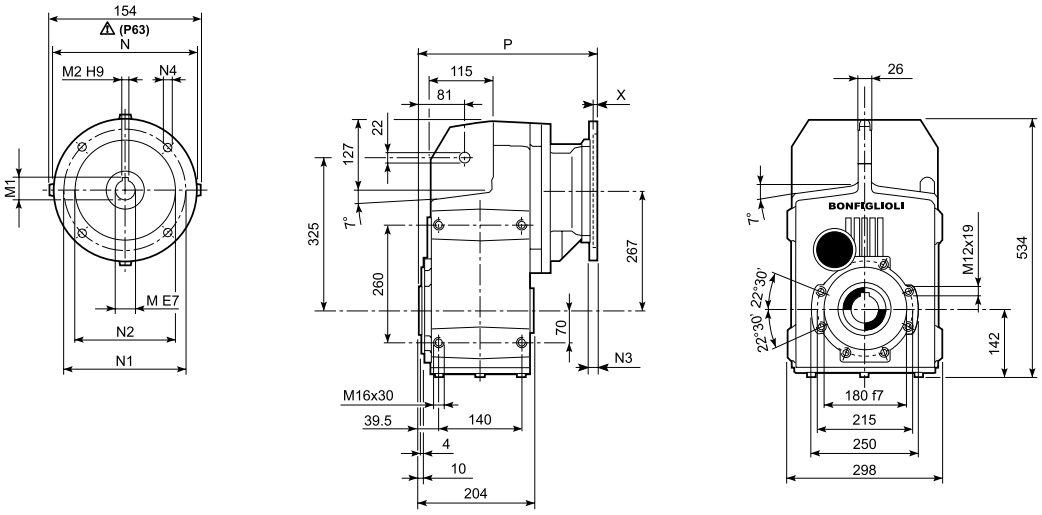

		M	M1	M2	N	N1	N2	N3	N4	X	P	Kg
F 60 3	**P63**	11	12.8	4	140	115	95	—	M8x19	4	302.5	103
F 60 3	**P71**	14	16.3	5	160	130	110	—	M8x16	4.5	302.5	103
F 60 3	**P80**	19	21.8	6	200	165	130	—	M10x14.5	4	322	104
F 60 3	**P90**	24	27.3	8	200	165	130	—	M10x14.5	4	322	104
F 60 3	**P100**	28	31.3	8	250	215	180	—	M12x16	4.5	331	108
F 60 3	**P112**	28	31.3	8	250	215	180	—	M12x16	4.5	331	108
F 60 3	**P132**	38	41.3	10	300	265	230	16	14	5	367.5	111
F 60 3	**P160**	42	45.3	12	350	300	250	23	18	5.5	419	116
F 60 3	**P180**	48	51.8	14	350	300	250	23	18	5.5	419	116
F 60 4	**P63**	11	12.8	4	140	115	95	—	M8x19	4	373	108
F 60 4	**P71**	14	16.3	5	160	130	110	—	M8x16	4.5	373	108
F 60 4	**P80**	19	21.8	6	200	165	130	—	M10x14.5	4	392.5	110
F 60 4	**P90**	24	27.3	8	200	165	130	—	M10x14.5	4	392.5	110
F 60 4	**P100**	28	31.3	8	250	215	180	—	M12x16	4.5	402.5	114
F 60 4	**P112**	28	31.3	8	250	215	180	—	M12x16	4.5	402.5	114

F 60...HS

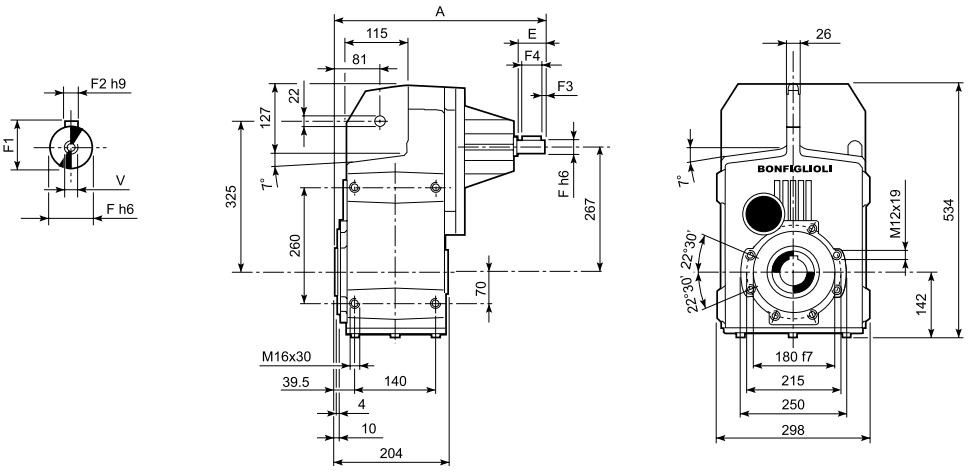

		A	E	F	F1	F2	F3	F4	V	Kg
F 60 3	**HS**	419	60	28	31	8	5.0	50	M10x22	108
F 60 4		462.5	50	24	27	8	2.5	45	M8x19	105

F 60...SK / SC

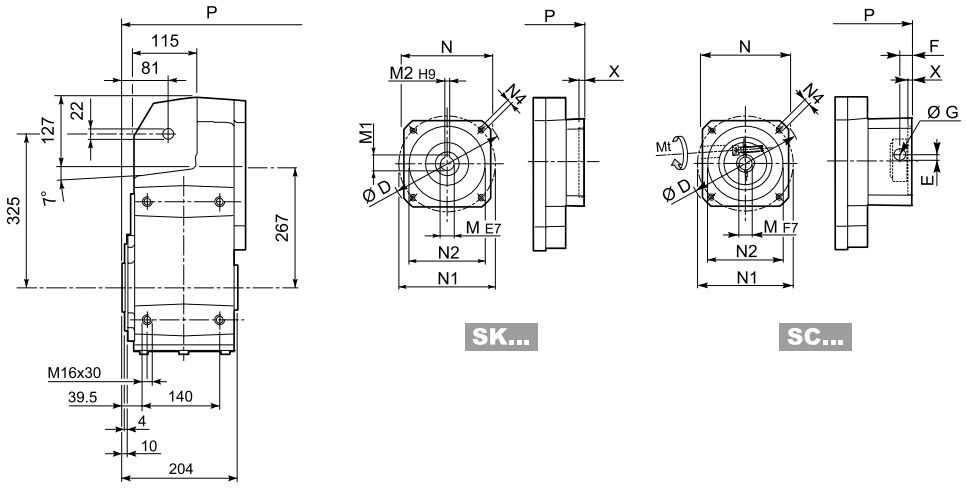

											2/3x		4x	
		D	M	M1	M2	N	N1	N2	N4	X	P	Kg	P	Kg
F 60 4	**SK 80B**	120	14	16.3	5	96	100	80	M6x12	4	—	—	392.5	109
F 60 3/4	**SK 80C**	120	19	21.8	6	96	100	80	M6x12	4	322	106	392.5	112
F 60 3/4	**SK 95A**	130	14	16.3	5	102	115	95	M8x12	4	322	106	392.5	112
F 60 3/4	**SK 95B**	130	19	21.8	6	102	115	95	M8x12	4	322	106	392.5	112
F 60 3/4	**SK 95C**	130	24	27.3	8	102	115	95	M8x12	4	322	106	392.5	112
F 60 3/4	**SK 110A**	140	19	21.8	6	120	130	110	M8x12	5	322	106	392.5	112
F 60 3/4	**SK 110B**	140	24	27.3	8	120	130	110	M8x12	5	322	106	392.5	112
F 60 3/4	**SK 130A**	188	24	27.3	8	142	165	130	M10x20	5	322	108	392.5	112
F 60 3	**SK 130B**	189	32	35.3	10	160	165	130	M10x20	5	368.5	109	—	—
F 60 3	**SK 180A**	240	32	35.3	10	192	215	180	M12x19	5	368.5	109	—	—
F 60 3	**SK 180B**	240	38	41.3	10	192	215	180	M12x19	5	368.5	109	—	—

														2/3x		4x	
			Mt [Nm]	D	E	F	G	M	N	N1	N2	N4	X	P	Kg	P	Kg
F 60 4	**SC 80B**	M6	15	120	15.5	14.5	17.75	14	96	100	80	M6x12	4	—	—	416	113
F 60 3/4	**SC 80C**	M6	15	120	15.5	14.5	17.75	19	96	100	80	M6x12	4	345.5	107	416	113
F 60 3/4	**SC 95A**	M6	15	130	16.5	15	17.75	14	102	115	95	M8x16	4	345.5	107	416	113
F 60 3/4	**SC 95B**	M6	15	130	16.5	15	17.75	19	102	115	95	M8x16	4	345.5	107	416	113
F 60 3/4	**SC 95C**	M6	15	130	16.5	15	17.75	24	102	115	95	M8x16	4	345.5	107	416	113
F 60 3/4	**SC 110A**	M6	15	140	16.5	16	17.75	19	120	130	110	M8x16	5	345.5	108	416	113
F 60 3/4	**SC 110B**	M6	15	140	16.5	16	17.75	24	120	130	110	M8x16	5	345.5	108	416	113
F 60 3/4	**SC 130A**	M6	15	188	19	16	17.75	24	142	165	130	M10x20	5	345.5	109	416	115
F 60 3	**SC 130B**	M8	36	189	20	17	17.75	32	160	165	130	M10x20	5	390.5	112	—	—
F 60 3	**SC 180A**	M8	36	240	20	17.5	17.75	32	192	215	180	M12x24	5	394.5	112	—	—
F 60 3	**SC 180B**	M8	36	240	20	17.5	17.75	38	192	215	180	M12x24	5	394.5	112	—	—

F 60

F 60...H

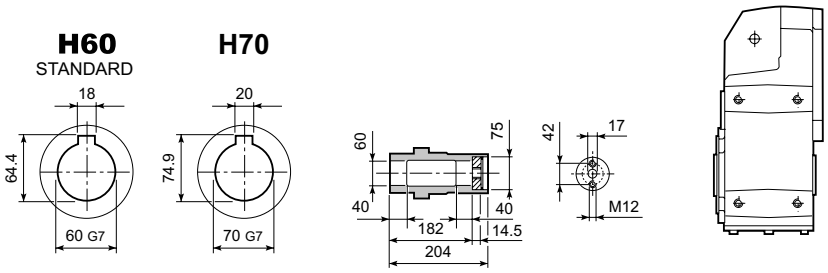

F 60...S

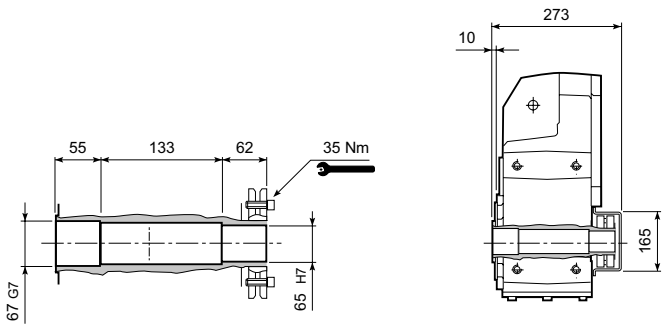

F 60...R

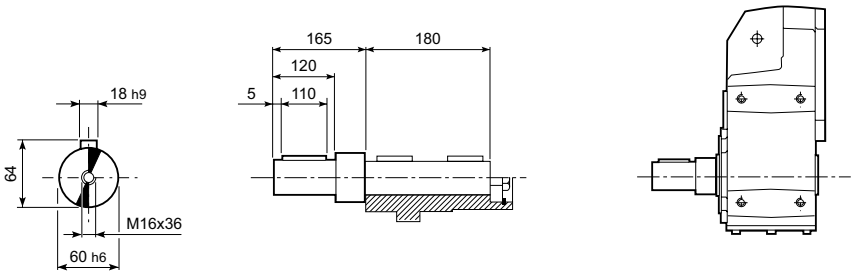

F 60...QF

	Ø
QF60	60
QF65	65
QF70	70

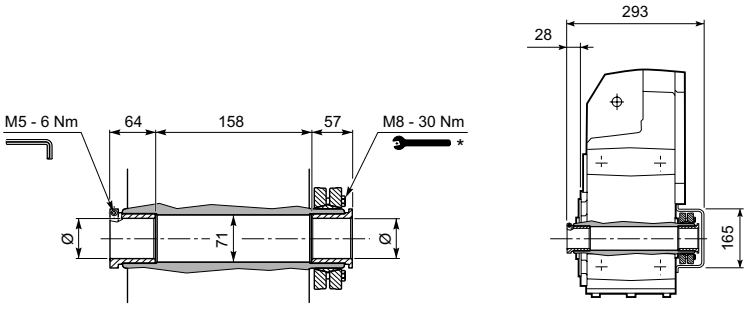

F 60...F...

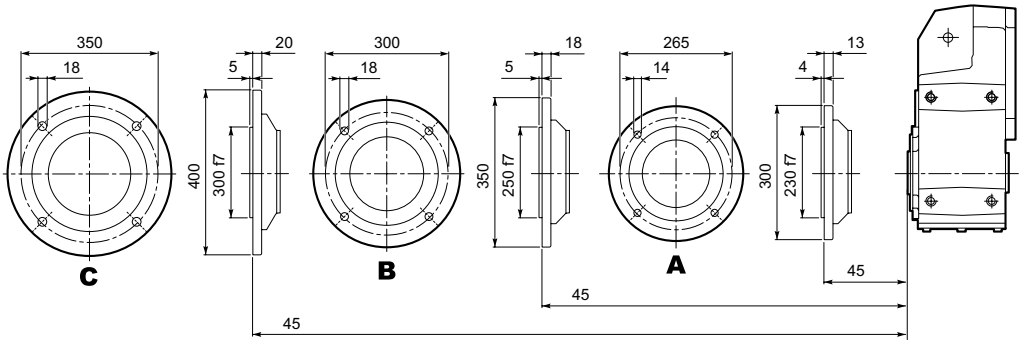

* Follow the MOUNTING INSTRUCTIONS supplied with the gearbox.

F 70...M/ME/MX

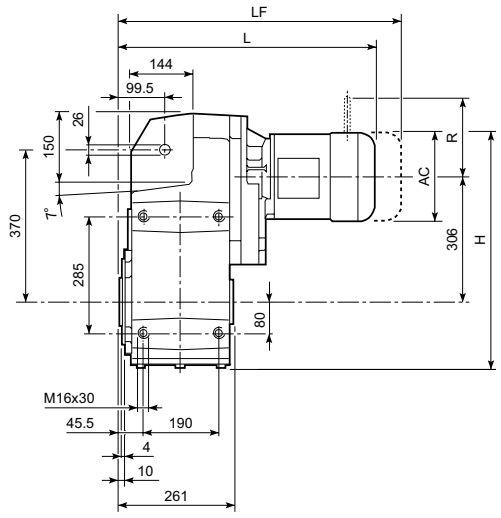

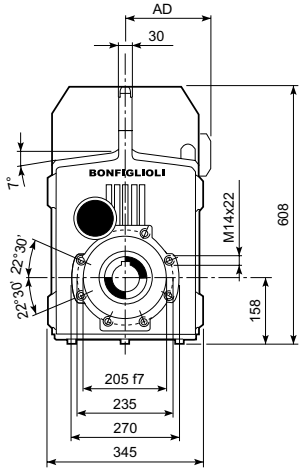

				Gearmotor - Without brake					Gearmotor - With brake			
									M...FD			
				AC	H	L	AD	Kg	LF	Kg	R	AD
F 70 3	S2	ME2S		156	542	552	119	173	622	175.1	129	143
		MX2S		156	542	596	119	178	668	182.3	129	143
	S3	ME3S		195	561.5	595	142	178	691	184.4	160	155
		MX3S		195	561.5	627	142	181	717	189.4	160	155
		ME3L		195	561.5	627	142	188	718	190.9	160	155
		MX3L		195	561.5	671	142	194	763	198.4	160	155
	S4	ME4	MX4	258	593	735	193	220	844	228.4	204	210
		ME4LB	MX4LA	258	593	770	193	228	868	242.4	226	210
	S5	ME5S	MX5S	310	619	821.5	245	248	961.5	302.4	266	245
		ME5L	MX5L	310	619	865.5	245	264	999.5	313.4	226	245
F 70 4	S1	M1		138	533	574	108	173	635	176	103	135
		ME1		138	533	574	108	173	635	176	103	135
		MX1		138	533	574	108	173	635	176	103	135
	S2	ME2S		156	542	603	119	177	673	179.1	129	143
		MX2S		156	542	647	119	182	719	186.3	129	143
	S3	ME3S		195	561.5	646	142	181	742	188.4	160	155
		MX3S		195	561.5	678	142	184	768	193.4	160	155
		ME3L		195	561.5	678	142	191	769	194.9	160	155
		MX3L		195	561.5	722	142	197	814	202.4	160	155
	S4	ME4	MX4	258	593	786	193	223	895	232.4	204	210
		ME4LB	MX4LA	258	593	821	193	231	919	246.4	226	210

F 70...P(IEC)

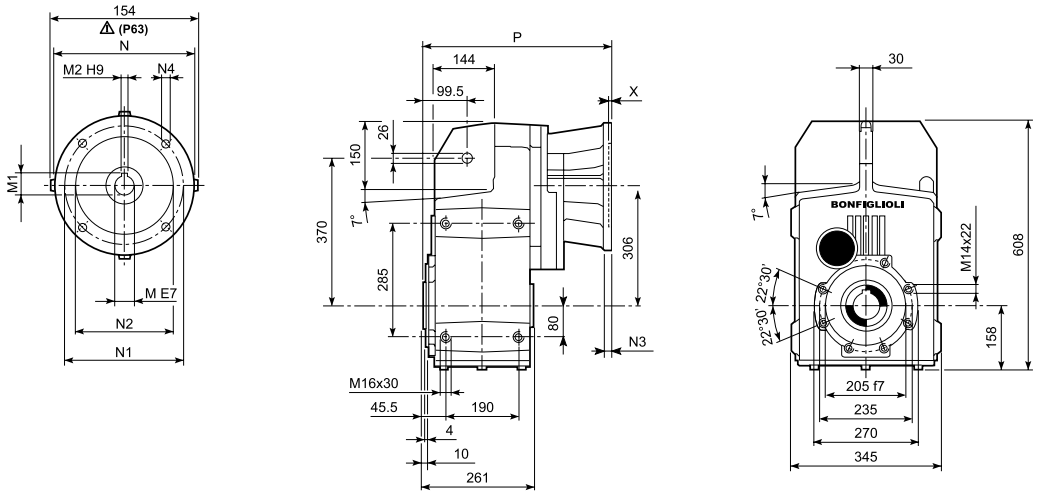

		M	M1	M2	N	N1	N2	N3	N4	X	P	Kg
F 70 3	**P80**	19	21.8	6	200	165	130	—	M10x14.5	4	387.5	167
F 70 3	**P90**	24	27.3	8	200	165	130	—	M10x14.5	4	387.5	167
F 70 3	**P100**	28	31.3	8	250	215	180	—	M12x16	4.5	397.5	171
F 70 3	**P112**	28	31.3	8	250	215	180	—	M12x16	4.5	397.5	171
F 70 3	**P132**	38	41.3	10	300	265	230	16	14	5	434	173
F 70 3	**P160**	42	45.3	12	350	300	250	23	18	6	489.5	185
F 70 3	**P180**	48	51.8	14	350	300	250	23	18	6	489.5	185
F 70 3	**P200**	55	59.3	16	400	350	300	—	M16x25	7	514.5	206
F 70 4	**P63**	11	12.8	4	140	115	95	—	M8x19	4	419	168
F 70 4	**P71**	14	16.3	5	160	130	110	—	M8x16	4.5	419	168
F 70 4	**P80**	19	21.8	6	200	165	130	—	M10x14.5	4	438.5	170
F 70 4	**P90**	24	27.3	8	200	165	130	—	M10x14.5	4	438.5	170
F 70 4	**P100**	28	31.3	8	250	215	180	—	M12x16	4.5	446.5	174
F 70 4	**P112**	28	31.3	8	250	215	180	—	M12x16	4.5	446.5	174
F 70 4	**P132**	38	41.3	10	300	265	230	16	14	5	482	176

F 70...HS

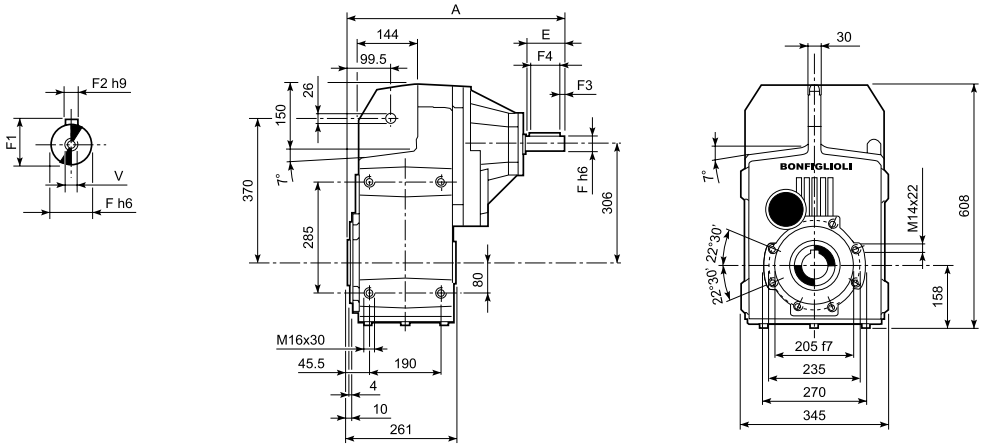

		A	E	F	F1	F2	F3	F4	V	Kg
F 70 3	**HS**	572	110	42	45	12	10	90	M12x28	186
F 70 4		508.5	50	24	27	8	2.5	45	M8x19	174

F 70

F 70...H

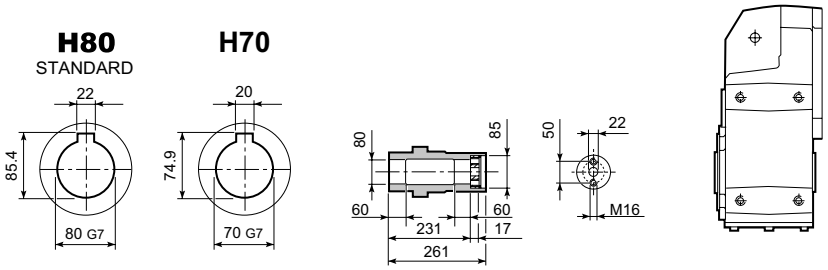

F 70...S

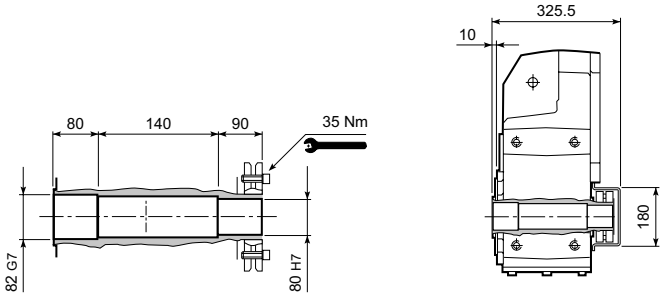

F 70...R

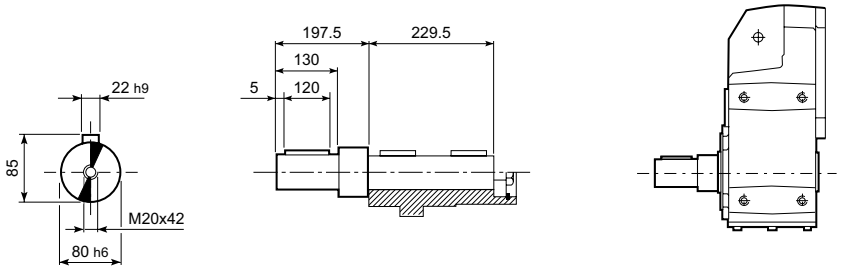

F 70...F...

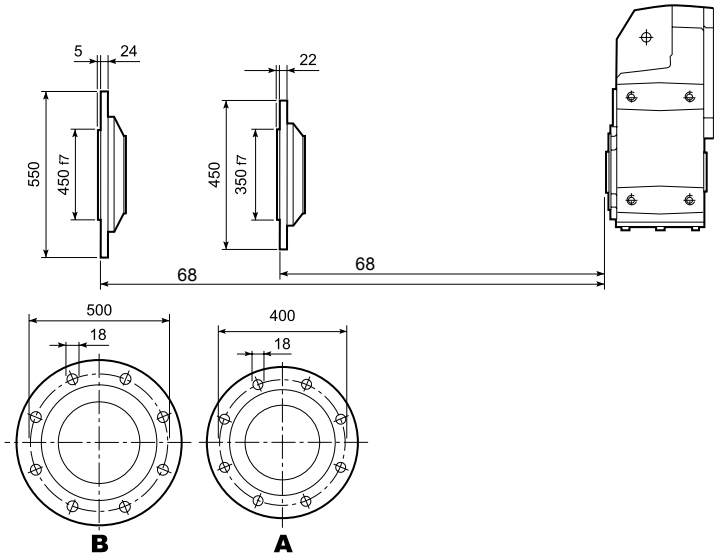

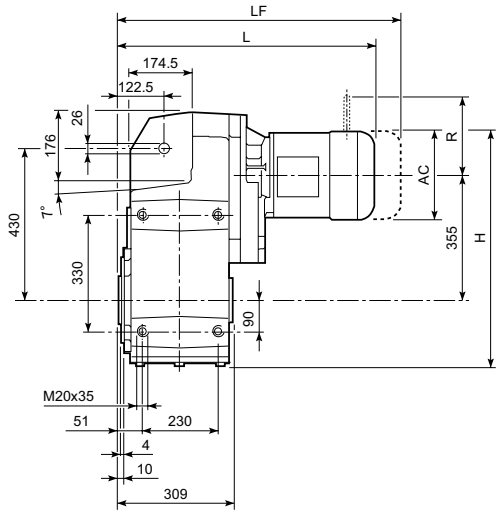

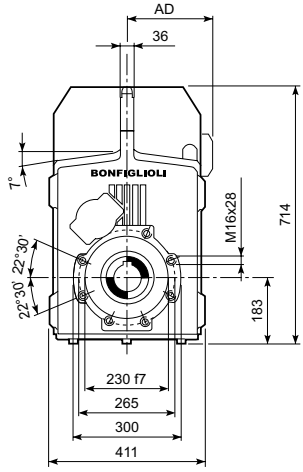

				Gearmotor - Without brake					Gearmotor - With brake			
									M...FD			
				AC	H	L	AD	Kg	LF	Kg	R	AD
F 80 3	S3	ME3S		195	635.5	653	142	266	749	272.5	160	155
		MX3S		195	635.5	685	142	269	775	277.5	160	155
		ME3L		195	635.5	685	142	275	776	279	160	155
		MX3L		195	635.5	729	142	281	821	286.5	160	155
	S4	ME4	MX4	258	667	793	193	307	902	316.5	204	210
		ME4LB	MX4LA	258	667	828	193	315	926	330.5	226	210
	S5	ME5S	MX5S	310	693	879.5	245	335	1019.5	390.5	266	245
		ME5L	MX5L	310	693	923.5	245	351	1057.5	401.5	266	245
F 80 4	S1	M1		138	607	644	108	262	705	265	103	135
		ME1		138	607	644	108	262	705	265	103	135
		MX1		138	607	644	108	262	705	265	103	135
	S2	ME2S		156	616	673	119	266	743	263.2	129	143
		MX2S		156	616	717	119	271	789	270.4	129	143
	S3	ME3S		195	635.5	716	142	271	812	272.5	160	155
		MX3S		195	635.5	748	142	274	838	277.5	160	155
		ME3L		195	635.5	748	142	280	839	279	160	155
		MX3L		195	635.5	792	142	286	884	286.5	160	155
	S4	ME4	MX4	258	667	856	193	312	965	316.5	204	210
		ME4LB	MX4LA	258	667	891	193	320	989	330.5	226	210

F 80...P(IEC)

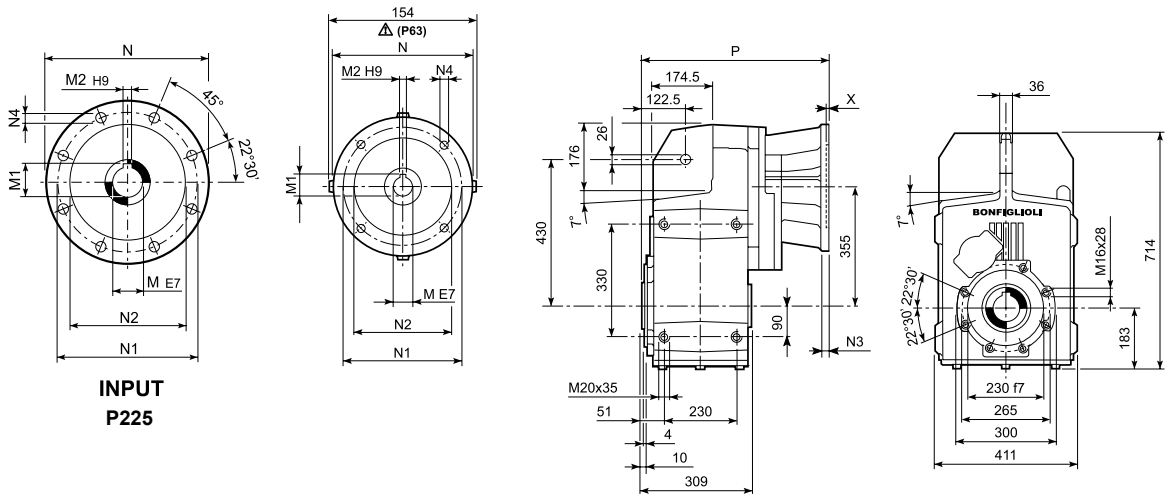

		M	M1	M2	N	N1	N2	N3	N4	X	P	Kg
F 80 3	**P80**	19	21.8	6	200	165	130	—	M10x14.5	4	445.5	255
F 80 3	**P90**	24	27.3	8	200	165	130	—	M10x14.5	4	445.5	255
F 80 3	**P100**	28	31.3	8	250	215	180	—	M12x16	4.5	455.5	259
F 80 3	**P112**	28	31.3	8	250	215	180	—	M12x16	4.5	455.5	259
F 80 3	**P132**	38	41.3	10	300	265	230	16	14	5	492	261
F 80 3	**P160**	42	45.3	12	350	300	250	23	18	6	547.5	276
F 80 3	**P180**	48	51.8	14	350	300	250	23	18	6	547.5	276
F 80 3	**P200**	55	59.3	16	400	350	300	—	M16x25	7	572.5	298
F 80 3	**P225**	60	64.4	18	450	400	350	25	18	6	618	298
F 80 4	**P63**	11	12.8	4	140	115	95	—	M8x19	4	489	258
F 80 4	**P71**	14	16.3	5	160	130	110	—	M8x16	4.5	489	258
F 80 4	**P80**	19	21.8	6	200	165	130	—	M10x14.5	4	508.5	260
F 80 4	**P90**	24	27.3	8	200	165	130	—	M10x14.5	4	508.5	260
F 80 4	**P100**	28	31.3	8	250	215	180	—	M12x16	4.5	518.5	264
F 80 4	**P112**	28	31.3	8	250	215	180	—	M12x16	4.5	518.5	264
F 80 4	**P132**	38	41.3	10	300	265	230	16	14	5	552	266

F 80...HS

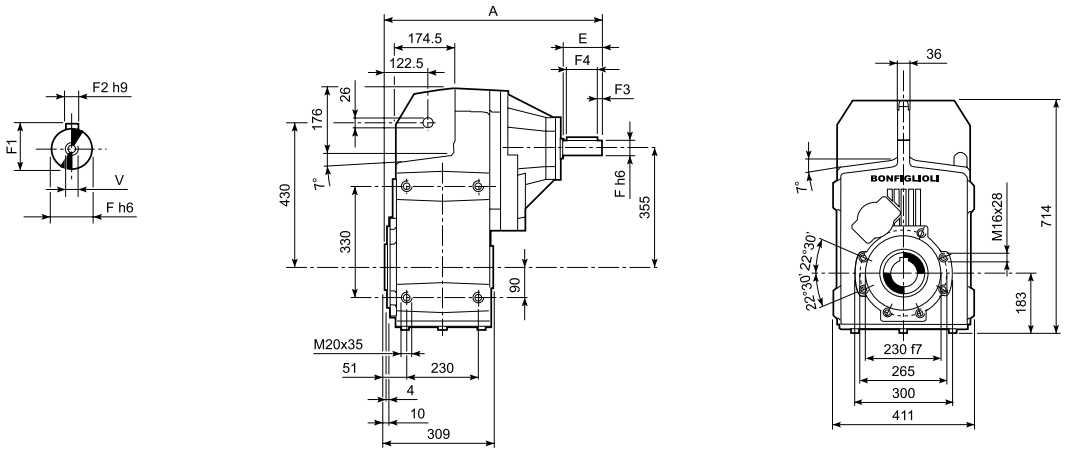

		A	E	F	F1	F2	F3	F4	V	Kg
F 80 3	**HS**	630	110	42	45	12	10	90	M12x28	273
F 80 4		575.5	50	24	27	8	2.5	45	M8x19	263

F 80

F 80...H

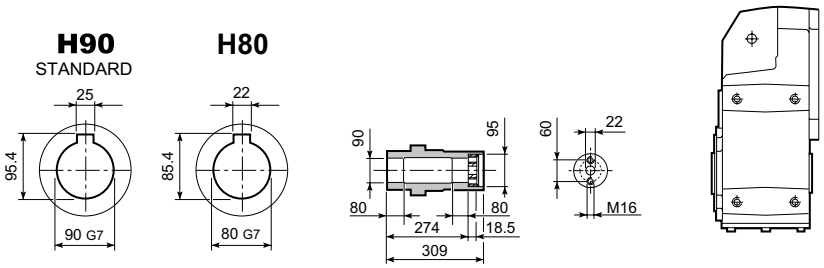

F 80...S

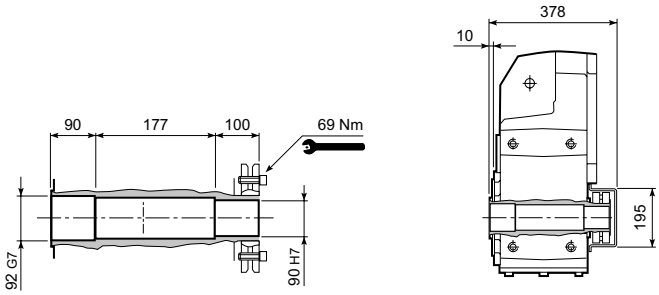

F 80...R

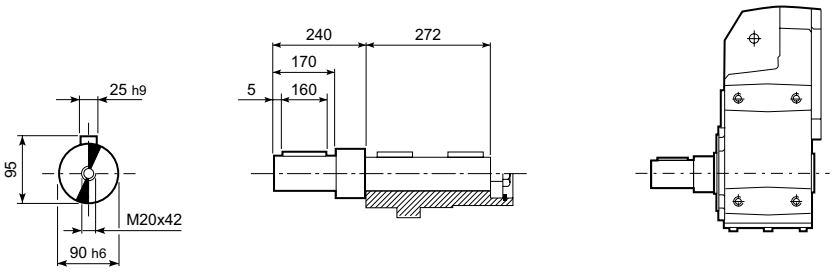

F 80...F...

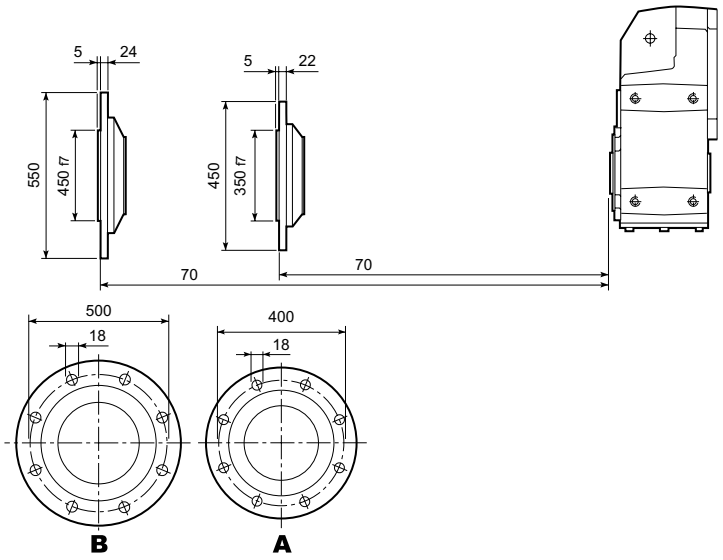

F 90...M/ME/MX

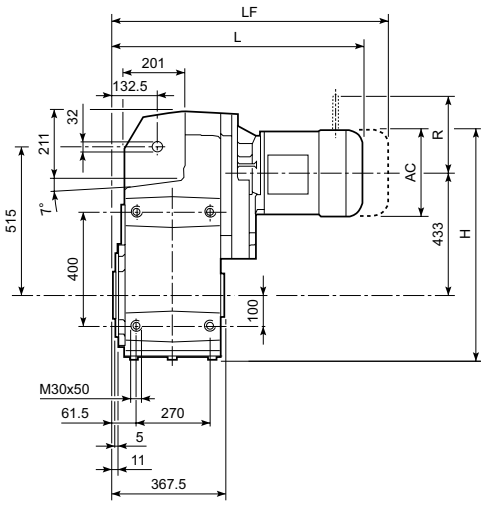

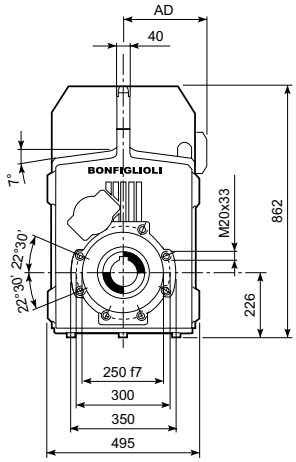

				Gearmotor - Without brake					Gearmotor - With brake			
									M...FD			
				AC	H	L	AD	Kg	LF	Kg	R	AD
F 90 3	S3	ME3S		195	756	728	142	453	824	459.5	160	155
		MX3S		195	756	760	142	456	850	464.5	160	155
		ME3L		195	756	760	142	462	851	466	160	155
		MX3L		195	756	804	142	468	896	473.5	160	155
	S4	ME4	MX4	258	787.5	868	193	494	977	503.5	204	210
		ME4LB	MX4LA	258	787.5	894	193	504	992	517.5	226	210
	S5	ME5S	MX5S	310	813.5	998.5	245	538	1138.5	577.5	266	245
		ME5L	MX5L	310	813.5	998.5	245	549	1132.5	588.5	266	245
F 90 4	S2	ME2S		156	736.5	768	119	456	838	457.2	129	143
		MX2S		156	736.5	812	119	461	884	464.4	129	143
	S3	ME3S		195	756	811	142	460	907	466.5	160	155
		MX3S		195	756	843	142	463	933	471.5	160	155
		ME3L		195	756	843	142	470	934	473	160	155
		MX3L		195	756	887	142	476	979	480.5	160	155
	S4	ME4	MX4	258	787.5	951	193	502	1060	510.5	204	210
		ME4LB	MX4LA	258	787.5	986	193	510	1084	524.5	226	210

F 90...P(IEC)

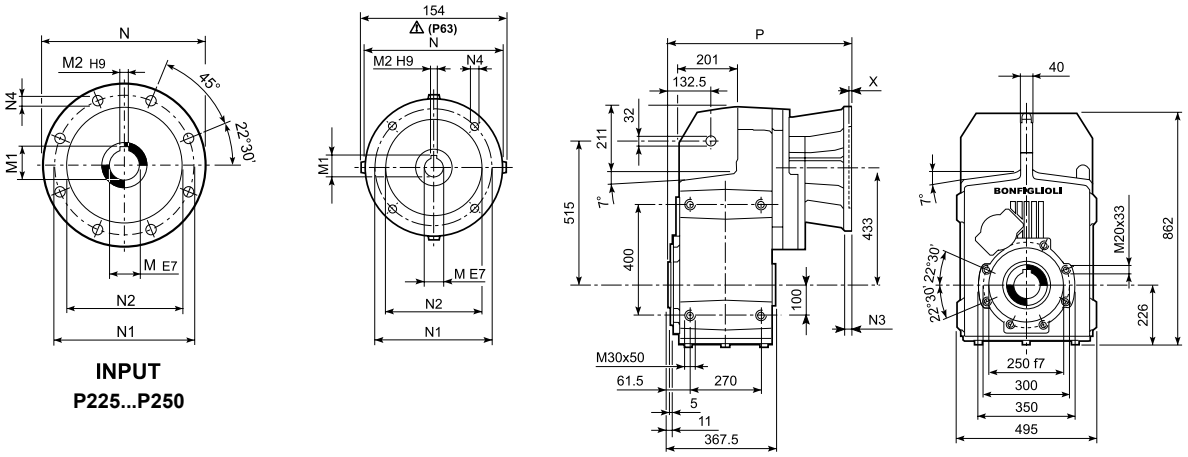

INPUT
P225...P250

		M	M1	M2	N	N1	N2	N3	N4	X	P	Kg
F 90 3	**P80**	19	21.8	6	200	165	130	—	M10x14.5	4	520.5	442
F 90 3	**P90**	24	27.3	8	200	165	130	—	M10x14.5	4	520.5	442
F 90 3	**P100**	28	31.3	8	250	215	180	—	M12x16	4.5	530.5	446
F 90 3	**P112**	28	31.3	8	250	215	180	—	M12x16	4.5	530.5	446
F 90 3	**P132**	38	41.3	10	300	265	230	16	14	5	567	449
F 90 3	**P160**	42	45.3	12	350	300	250	23	18	6	622.5	463
F 90 3	**P180**	48	51.8	14	350	300	250	23	18	6	622.5	463
F 90 3	**P200**	55	59.3	16	400	350	300	—	M16x25	7	647.5	485
F 90 3	**P225**	60	64.4	18	450	400	350	30	18	6	693	485
F 90 3	**P250**	65	69.4	18	550	500	450	30	18	6	723	507
F 90 4	**P63**	11	12.8	4	140	115	95	—	M8x19	4	584	448
F 90 4	**P71**	14	16.3	5	160	130	110	—	M8x16	4.5	584	448
F 90 4	**P80**	19	21.8	6	200	165	130	—	M10x14.5	4	603.5	450
F 90 4	**P90**	24	27.3	8	200	165	130	—	M10x14.5	4	603.5	450
F 90 4	**P100**	28	31.3	8	250	215	180	—	M12x16	4.5	613.5	454
F 90 4	**P112**	28	31.3	8	250	215	180	—	M12x16	4.5	613.5	454
F 90 4	**P132**	38	41.3	10	300	265	230	16	14	5	650	455
F 90 4	**P160**	42	45.3	12	350	300	250	23	18	5.5	700.5	461
F 90 4	**P180**	48	51.8	14	350	300	250	23	18	5.5	700.5	461

F 90...HS

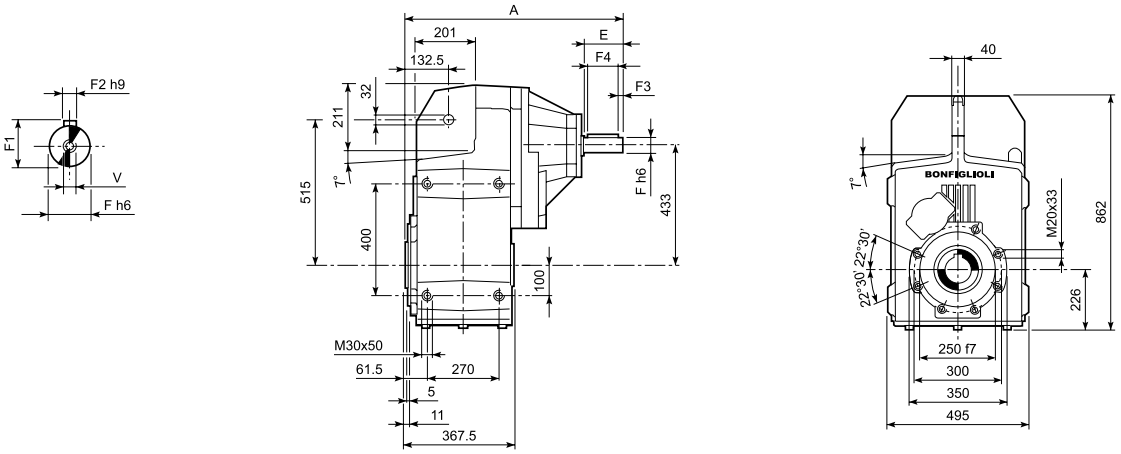

		A	E	F	F1	F2	F3	F4	V	Kg
F 90 3	**HS**	806.5	140	60	64	18	10	120	M16x36	485
F 90 4		673.5	50	24	27	8	2.5	45	M8x19	452

F 90

F 90...H

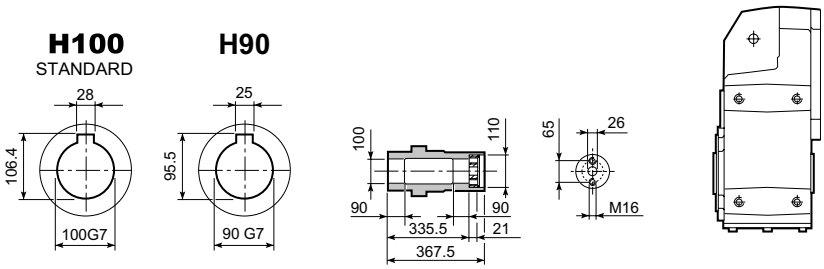

F 90...S

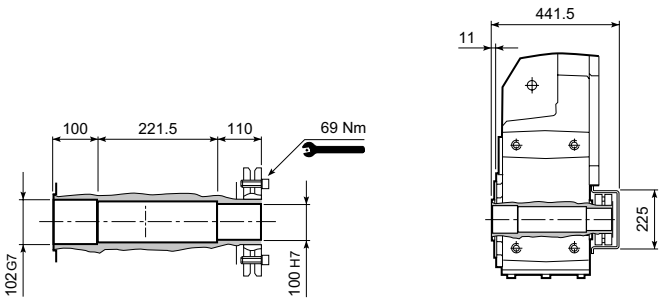

F 90...R

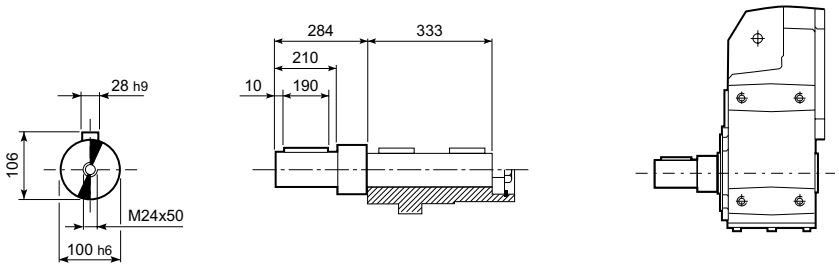

F 90...F...

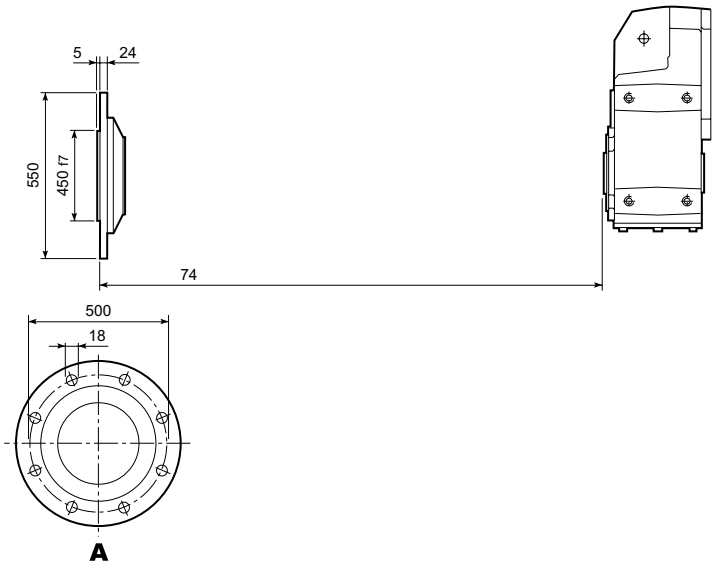

66 ACCESSORIES

Anti-vibration kit

The gearboxes of the F series are supplied with an anti-vibration kit at customer request.
The kit includes all components required for shaft mounting (torque arm is out of scope). Dimensions are shown in the following table.

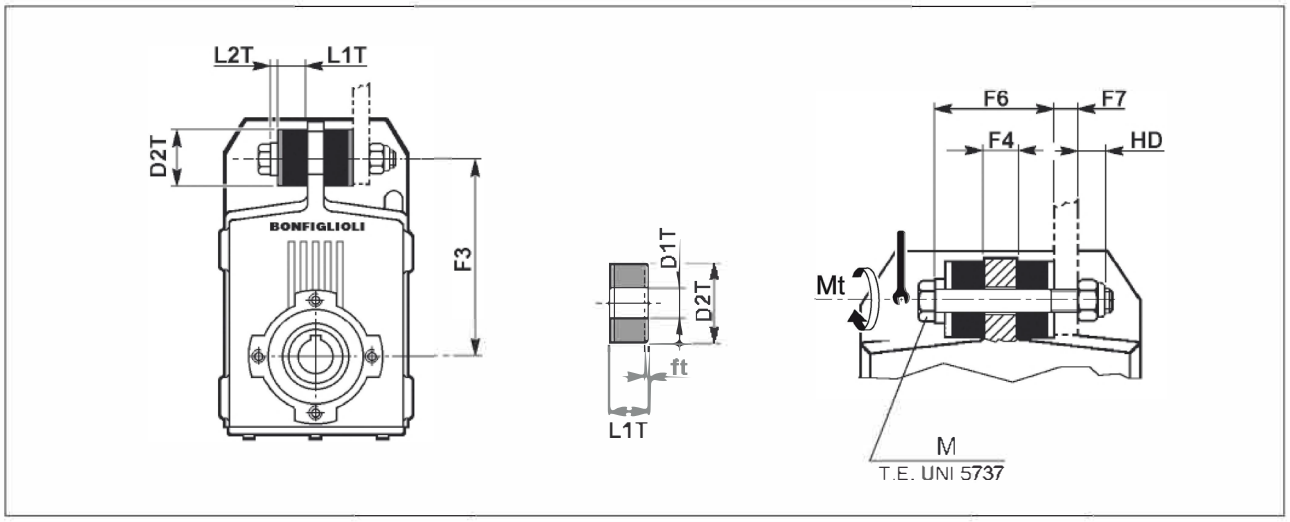

	F3	F4	F6	F7 (max.)	HD	L1T	L2T	D1T	D2T	M	Mt [Nm]	ft
F 10	140	20	55	10	12.3	15	5	11	30	M10x80	10	1.5
F 20	160	20	55	10	12.3	15	5	11	30	M10x80	10	1.5
F 25	162	20	65	20	14.8	20	5	12.5	40	M12x100	20	1.5
F 31	170	20	65	20	14.8	20	5	12.5	40	M12x100	20	1.5
F 41	218	16	61	24	14.8	20	5	12.5	40	M12x100	20	2.3
F 51	278	20	90	47	23	30	10	21	60	M20x160	50	3.0
F 60	325	26	96	41	23	30	10	21	60	M20x160	50	4.0
F 70	370	30	122	50	28	40	12	25	80	M24x200	100	4.0
F 80	430	36	128	44	28	40	12	25	80	M24x200	100	6.0
F 90	515	40	175	40	33.2	60	15	32	100	M30x260	200	9.0

f_t = shortening of the rubber buffer under rated torque transmission.

67 CUSTOMER' SHAFT

Make the driven shaft to be coupled to the gear unit's output shaft from a good quality steel, respecting the dimensions given in the table.

A device such as that illustrated below should also be installed to secure the shaft axially. Take care to verify and dimension the various components to suit the needs of the application.

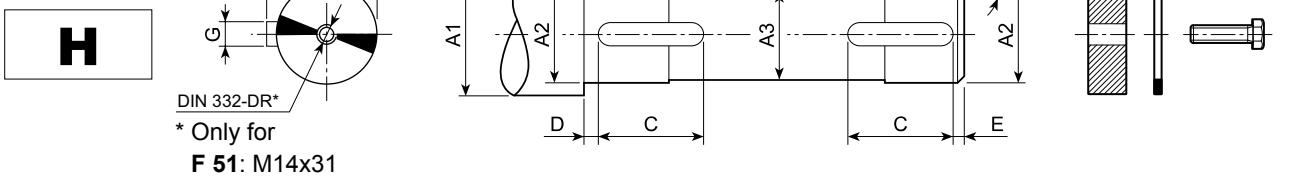

* Only for
F 51: M14x31

	A1	A2	A3	B	B1	B2	C	D	E	F	G	R	S	UNI 6604	UNI 5739
F 10	≥ 35	30 h7	29	87.5	15.5	56.5	20	2	2	33	8 h9	0.5	1.5	8x7x20 A	M8x25
	≥ 30	25 h7	24	87.5	15.5	56.5	20	2	2	28	8 h9	0.5	1.5	8x7x20 A	
F 20	≥ 42	35 h7	34	99	18	63	22	2	2	38	10 h9	0.5	1.5	10x8x22 A	M8x30
	≥ 35	30 h7	29	99	18	63	22	2	2	33	8 h9	0.5	1.5	8x7x22 A	
F 25	≥ 47	40 h7	39	104	23	58	30	2	2	43	12 h9	0.5	1.5	12x8x30 A	M8x30
	≥ 42	35 h7	34	104	23	58	30	2	2	38	10 h9	0.5	1.5	10x8x30 A	
F 31	≥ 47	40 h7	39	104	28	48	30	2	2	43	12 h9	0.5	1.5	12x8x30 A	M8x30
	≥ 42	35 h7	34	104	28	48	30	2	2	38	10 h9	0.5	1.5	10x8x30 A	
F 41	≥ 52	45 h7	44	118	27.5	63	45	2.5	2.5	48.5	14 h9	1	2.0	14x9x45 A	M10x30
	≥ 47	40 h7	39	118	27.5	63	45	2.5	2.5	43	12 h9	1	2.0	12x8x45 A	
F 51	≥ 63	55 h7	54	139	33	73	50	2.5	2.5	59	16 h9	1	2.0	16x10x50 A	M14x45
	≥ 57	50 h7	49	139	33	73	50	2.5	2.5	53.5	14 h9	1	2.0	14x9x50 A	
F 60	≥ 78	70 h7	69	180	38	104	70	2.5	2.5	74.5	20 h9	1	2.0	20x12x70 A	M16x45
	≥ 68	60 h7	59	180	38	104	70	2.5	2.5	64	18 h9	1	2.0	18x11x70 A	
F 70	≥ 89	80 h7	79	229	58	113	75	3	3	85	22 h9	2.5	2.5	22x14x75 A	M20x55
	≥ 78	70 h7	69	229	58	113	75	3	3	74.5	20 h9	2.5	2.5	20x12x75 A	
F 80	≥ 99	90 h7	89	272	78	116	100	3	3	95	25 h9	2.5	2.5	25x14x100 A	M20x55
	v 89	80 h7	79	272	78	116	100	3	3	85	22 h9	2.5	2.5	22x14x100 A	
F 90	≥ 111	100 h7	99	333	87.5	158	110	3	3	106	28 h9	2.5	2.5	28x16x110 A	M24x65
	≥ 99	90 h7	89	333	87.5	158	110	3	3	95	25 h9	2.5	2.5	25x14x110 A	

S

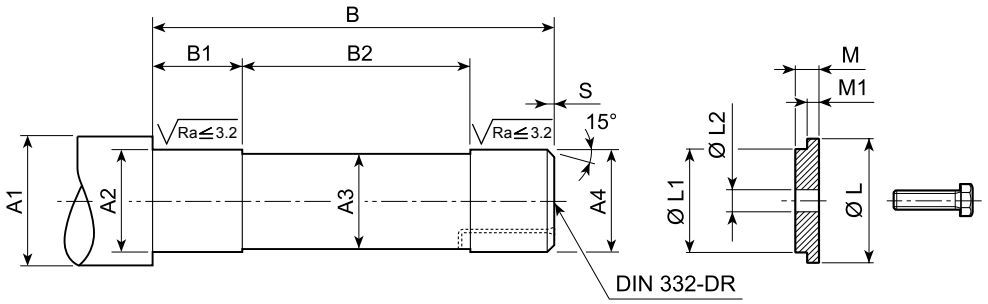

	A1	A2	A3	A4	B	B1	B2	R	S	L	L1	L2	M	M1	UNI 5739
F 10	≥ 36	27 h7	24	25 h6	138	34	70	0.5	1.5	29.5	25 d9	9	7	5.5	M8x25
F 20	≥ 42	32 h7	29	30 h6	160	38	84	0.5	1.5	35.5	30 d9	9	7	5.5	M8x25
F 25	≥ 42	32 h7	30	31 h6	172	38	96	0.5	1.5	35.5	31 d9	9	7	5.5	M8x25
F 31	≥ 50	38 h7	35	36 h6	155	40	73	1	2	43	36 d9	9	7	5.5	M8x25
F 41	≥ 58	44 h7	41	42 h6	177	46.5	82	1	2	49	42 d9	11	8.5	7	M10x30
F 51	≥ 68	54 h7	51	52 g6	201	48	91	1	2	61	52 d9	18	9	7.5	M16x45
F 60	≥ 84	67 h7	64	65 g6	248	53	133	1.5	2	80	65 d9	18	9	7.5	M16x45
F 70	≥ 104	82 h7	79	80 g6	308	78	140	2.5	2.5	95	80 d9	22	13.5	12	M20x55
F 80	≥ 114	92 h7	89	90 g6	365	88	177	2.5	2.5	105	90 d9	22	13.5	12	M20x55
F 90	≥ 126	102 h7	99	100 g6	429.5	98	221.5	2.5	2.5	120	100 d9	26	20	18.5	M24x70

QF

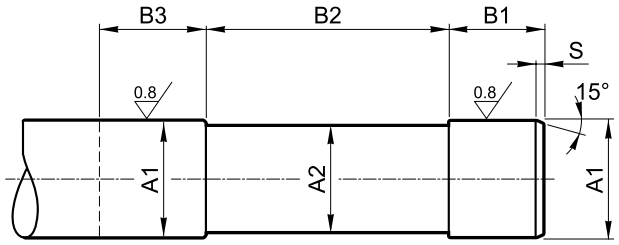

		A1	A2	B1	B2	B3	S
F 10	**QF25**	25 h6	24	41	83	≥ 50	1.5
	QF30	30 h6	29				
F 20	**QF25**	25 h6	24	41	104.5	≥ 50	1.5
	QF30	30 h6	29				
F 25	**QF30**	30 h6	29	41	120.5	≥ 50	1.5
	QF32	32 h6	31				
F 31	**QF35**	35 h6	34	45	95.5	≥ 54	1.5
	QF40	40 h6	39				
F 41	**QF42**	42 h6	41	46	112.5	≥ 55	2
	QF45	45 h6	44				
F 51	**QF50**	50 h6	49	48	131	≥ 57	2
	QF55	55 h6	54				
F 60	**QF60**	60 h6	59	57	158	≥ 66	2.5
	QF65	65 h6	64				
	QF70	70 h6	69				

68 DESIGN FEATURES

The main design characteristics are:
- modularity
- space effective
- high efficiency
- quite operation
- gears in hardened and case-hardened steel
- bare aluminium housing for sizes 10, 20, 30, unpainted
  high strength painted cast-iron housings for larger frame sizes
- input and output shafts from high grade steel.

(E 60)

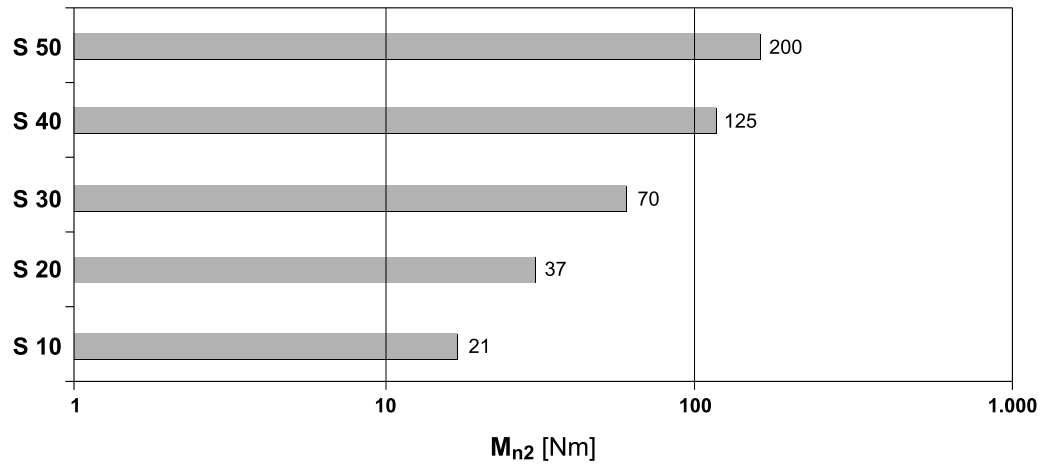

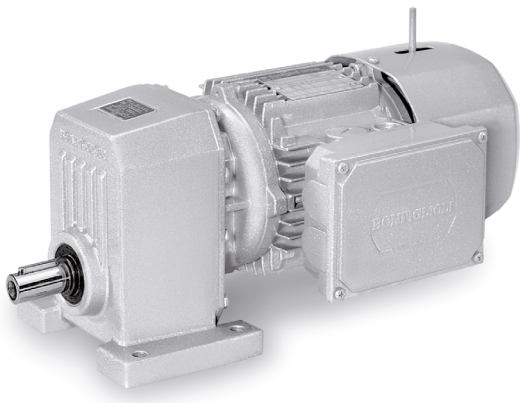

69 VERSIONS

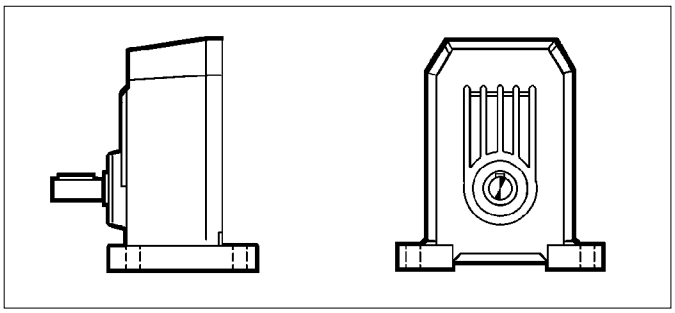

P

Foot mount

S 10 ... S 50

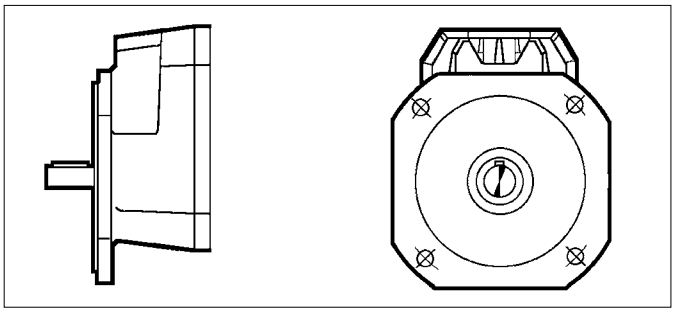

F

Flange mount

S 10 ... S 50

70 DESIGNATION

GEAR UNIT

S 10 1 P 1.4 S1 B3 .....

OPTIONS

MOUNTING POSITION

S...P: **B3** (Standard), **B6**, **B7**, **B8**, **V5**, **V6**
S...F: **B5** (Standard), **B51**, **B52**, **B53**, **V1**, **V3**

INPUT CONFIGURATION

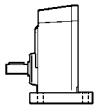

S05	**S3**
S1	**S4**
S2	**S5**

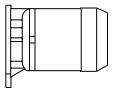

M - ME - MX - MXN

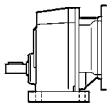

IEC_

P63	**P112**
P71	**P132**
P80	**P160**
P90	**P180**
P100	



BN - BE BX - BXN

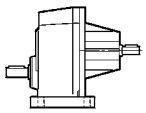

HS

GEAR RATIO

VERSION

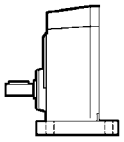

P

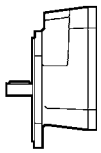

F

REDUCTIONS
1

GEAR FRAME SIZE
10, **20**, **30**, **40**, **50**

TYPE: **S** = single stage gear unit

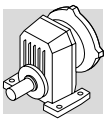

MOTOR | BRAKE

M **1LA** **4** 230/400-50 IP54 CLF ..... **W** **FD** 7.5 R SB 220 SA .....

OPTIONS

BRAKE SUPPLY

RECTIFIER TYPE
AC/DC
NB, SB, NBR, SBR, NR, SR

BRAKE HAND RELEASE
R, **RM**

BRAKE TORQUE

BRAKE TYPE
FD (d.c. brake)
FDD (high performance d.c. brake)

TERMINAL BOX POSITION
W (default), **N**, **E**, **S**

MOTOR MOUNTING
— (compact motor)
B5 (IEC - motor)

INSULATION CLASS
CL F standard
CL H option

DEGREE OF PROTECTION
IP54, IP55, IP56

VOLTAGE - FREQUENCY
For BXN/MXN see the “Voltage & frequency” section on EVOX catalogue

POLE NUMBER
2, **4**, **6**

MOTOR SIZE
0B ... 5LA (compact motor)
63A ... 280SBK (IEC motor)

MOTOR TYPE
MX - MXN = compact 3-phase, class IE3
BX - BXN = IEC 3-phase, class IE3
ME = compact 3-phase, class IE2
BE = IEC 3-phase, class IE2
M = compact 3-phase, class IE1
BN = IEC 3-phase, class IE1

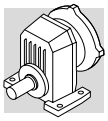

70.1 Gearbox options

LUBRICATION

Gearboxes S10, S20, S30, and S40, are usually factory filled with oil in the standard version.
Gearbox S50, is usually supplied unlubricated in the standard version.
However, for all sizes of gearbox factory filled with oil, it is possible to request the supply with more types of oil, selectable according to what is defined in the following table.

SO

Gear units S10, S20, S30, S40, usually factory filled with oil, to be supplied unlubricated.

LUBRIFICATION	Type	Designation	Producer
LU	PolyAlfaOlefine (PAO)	OMALA S4 GX 150	
LY	PolyAlfaOlefine (PAO)	OMALA S4 GX 220	
LV	PolyAlfaOlefine (PAO)	OMALA S4 GX 320	
LW	PolyAlfaOlefine (PAO)	OMALA S4 GX 460	
LH	PolyGlicole (PAG)	OMALA S4 WE 150	
LS	PolyGlicole (PAG)	OMALA S4 WE 220	
LO*	PolyGlicole (PAG)	OMALA S4 WE 320	
LK	PolyGlicole (PAG)	OMALA S4 WE 460	
LN [1]	Mineral Base EP	OMALA S2 G 150	
LZ [1]	Mineral Base EP	OMALA S2 G 220	
LI [1]	Mineral Base EP	OMALA S2 G 320	
LJ [1]	Mineral Base EP	OMALA S2 G 460	
LA	Food grade	KLUBERSYNTH UH1 6-150	
LB	Food grade	KLUBERSYNTH UH1 6-220	
LC	Food grade	KLUBERSYNTH UH1 6-320	
LD	Food grade	KLUBERSYNTH UH1 6-460	

* unless otherwise specified, the gearboxes S10, S20, S30 and S40 supplied with lubricant use OMALA S4 WE 320 oil.

[1] The use of mineral oil is permitted on gearmotors with service factor fs ≥ 1.30

DV

Dual oil seals on input shaft. (Available only for compact gearmotors).

VV

Fluoro elastomer oil seal on input shaft.

PV

All oil seals in Fluoro elastomer.

BP

Gearboxes, usually supplied with open breather plug, are supplied with a valve breather plug. The calibration of the valve can vary from 0,10 to 0,15 bar depending on the plug type. The valve opens at intervals and allows venting of internal pressure keeping out foreign bodies.
For option availability see chapter “Mounting positions and service plugs” of the Installation, Operation and Maintenance Manual (available at: www.bonfiglioli.com).

If needed contact Bonfiglioli Technical Service.

LONG TERM STOCK

In presence of LONG TERM STOCK option the configured product is supplied without the standard lubricant oil but with an anticorrosive protective liquid to grant the integrity and full functionality of the gear unit in those cases where the unit will not be installed immediately but it has to be stocked for a long period of time (installation later than 6 months from delivery).
The warranty conditions are valid 12 months from commissioning (with commissioning within 24 months from delivery) or 24 months from delivery without commissioning.
After 2 years of stock, the unit with LONG TERM STOCK option needs to be checked by Bonfiglioli assistance center. In case of a product that is not properly preserved, an offer by Bonfiglioli will be issued for a complete restore.
With the recovery activity successfully concluded, the warranty conditions restart from the 12 months of commissioning (with commissioning within 24 months from restore date) or 24 months from restore date

Applicability of LONG TERM STOCK option:

Gearbox size	Applicability of LONG TERM STOCK option
S10 ... S40	Only when oil lubrication options are not active (SO option is active)
S50	Only when oil lubrication options are not active (LO, LH, LS, LK, LA, LB, LC, LD)

The LONG TERM STOCK option can be requested in 2 versions:

- SLM Long Term Stock_Mineral Oil: option having anti-corrosive protective oil compatible with all mineral-based oil lubricants listed in the “Installation, operation and maintenance” Bonfiglioli manual (MUM).
- SLP Long Term Stock_Polyglycol Oil: option having anti-corrosive protective oil compatible with all polyglycol-based oil lubricants listed in the “Installation, operation and maintenance” Bonfiglioli manual (MUM).

Note: only one version can be selected. SLM and SLP can’t coexist.

When configuring a gear unit or gearmotor with the LONG TERM STOCK option, it is necessary to know the type of lubricating oil that will be used by the customer during the operating period (mineral or polyglycol oil).
Before commissioning a Bonfiglioli product with the LONG TERM STOCK option, make sure that the lubricating oil filling activity takes place through the specific filling plug determined by the mounting position indicated on the plate.
With regards to gear units with lifetime lubrication (see table below), the quantity of lubricating oil to top up is not indicated in the relevant “installation, use and maintenance” Bonfiglioli manual. In this case, if the STOCK LUNGO PERIODO option is active, it is therefore necessary to contact the Bonfiglioli assistance center to receive this information.

Gearbox size	Lubricant charge quantity
S10 ... S40	BONFIGLIOLI TECHNICAL SERVICE
S50	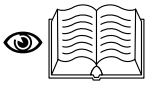

SURFACE PROTECTION

When no specific protection class is requested, the painted (ferrous) surfaces of gearboxes are protected to at least corrosivity class C2 (UNI EN ISO 12944-2). For improved resistance to atmospheric corrosion, gearboxes can be delivered with **C3** and **C4** surface protection, obtained by painting the complete gearbox.

(E 61)

SURFACE PROTECTION	Typical environments	Maximum surface temperature	Corrosivity class according to UNI EN ISO 12944-2
C3	Urban and industrial environments with up to 100% relative humidity (medium air pollution)	120°C	C3
C4	Industrial areas, coastal areas, chemical plant, with up to 100% relative humidity (high air pollution)	120°C	C4

Gearboxes with optional protection to class **C3** or **C4** are available in a choice of colours.
If no specific colour is requested (see the “PAINTING” option) gearboxes are finished in RAL 7042.
Gearboxes can also be supplied with surface protection for corrosivity class **C5** according to UNI EN ISO 12944-2. Contact our Technical Service for further details.

PAINTING

Gearboxes with optional protection to class C3 or C4 are available in the colours listed in the following table.

(E 62)

PAINTING	Colour	RAL number
RAL7042*	Traffik Grey A	7042
RAL5010	Gentian Blue	5010
RAL9005	Jet Black	9005
RAL9006	White Aluminium	9006
RAL9010	Pure White	9010
RAL7035	Light Grey	7035
RAL7001	Silver Grey	7001
RAL5015	Sky Blue	5015
RAL7037	Dusty Grey	7037
RAL5024	Pastel Blue	5024

* Gearboxes are supplied in this standard colour if no other colour is specified.

NOTE – “PAINTING” options can only be specified in conjunction with “SURFACE PROTECTION” options.

CERTIFICATES

AC - Certificate of compliance
The document certifies the compliance of the product with the purchase order and the construction in conformity with the applicable procedures of the Bonfiglioli Quality System.

CC - Inspection certificate
The document entails checking on order compliance, the visual inspection of external conditions and of mating dimensions. Checking on main functional parameters in unloaded conditions is also performed along with oil seal proofing, both in static and in running conditions. Units inspected are sampled within the shipping batch and marked individually.

70,2 Motor options

AL, AR
A backstop device on the motor itself, as described in the electric motors section of this catalogue, is available for gearmotors with integral M, ME or MX Series motors. The following table shows the direction of free rotation of the gearbox, on the basis of which the correct option must be selected.

(E 63)

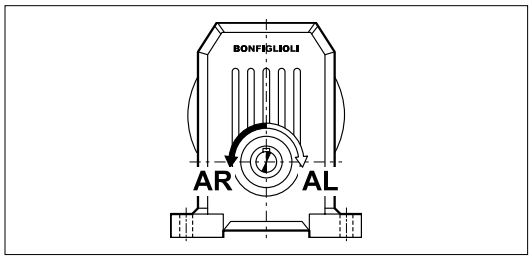

For further information on options, consult the electric motors section.

71 MOUNTING POSITION AND TERMINAL BOX ANGULAR LOCATION

Location of motor terminal box can be specified by viewing the motor from the fan side; standard location is shown in black (W).

Angular position of the brake release lever.
Unless otherwise specified, brake motors have the manual device side located, 90° apart from terminal box.
Different angles can be specified through the relevant options available.

(E 64)

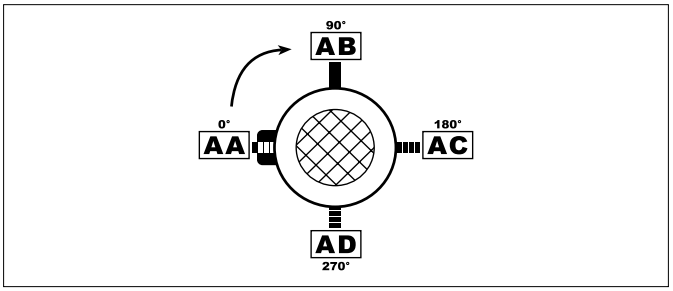

S ... P

B3

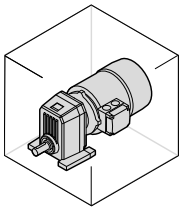
_S

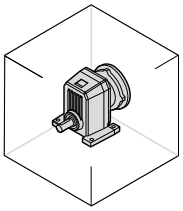
_P(IEC)

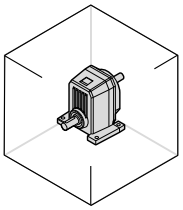
_HS

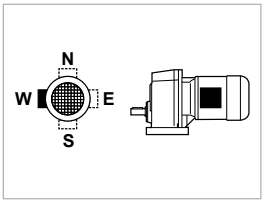

B6

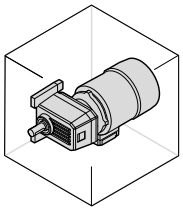
_S

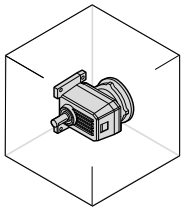
_P(IEC)

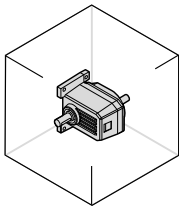
_HS

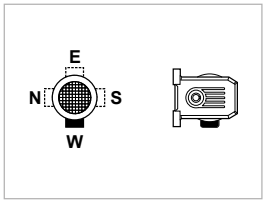

B7

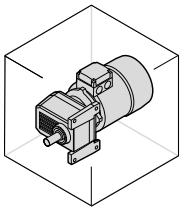
_S

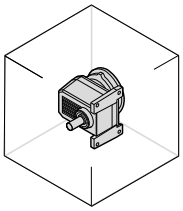
_P(IEC)

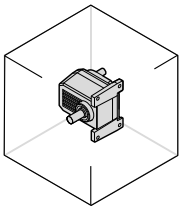
_HS

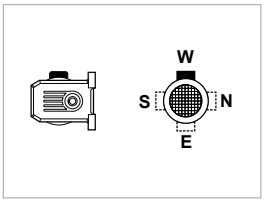

B8

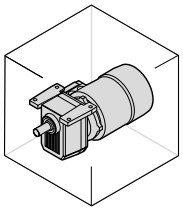
_S

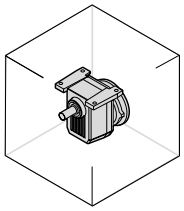
_P(IEC)

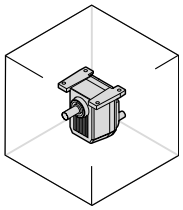
_HS

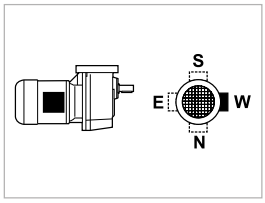

V5

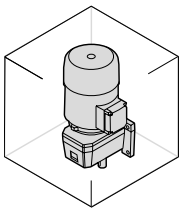
_S

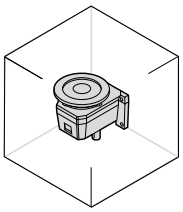
_P(IEC)

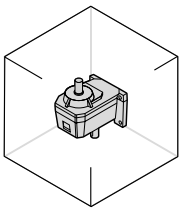
_HS

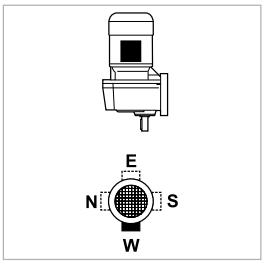

V6

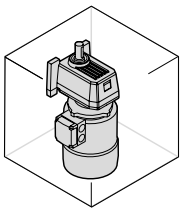
_S

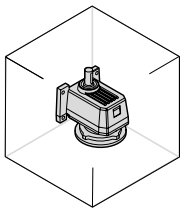
_P(IEC)

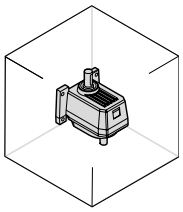
_HS

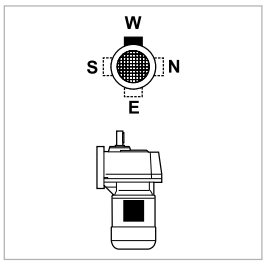

W = Default

S ... F

B5

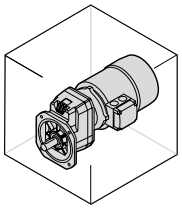

_S

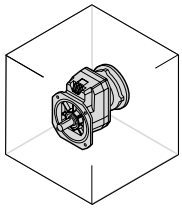

_P(IEC)

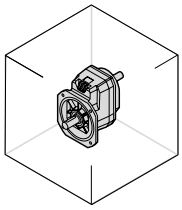

_HS

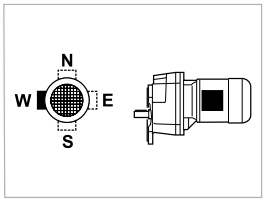

B51

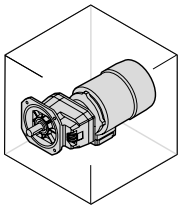

_S

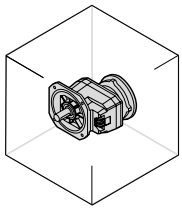

_P(IEC)

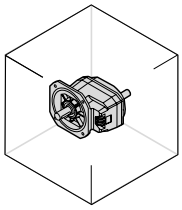

_HS

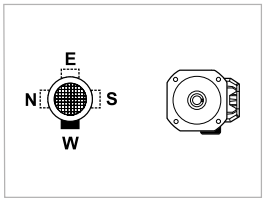

B53

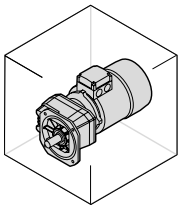

_S

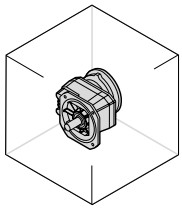

_P(IEC)

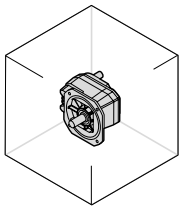

_HS

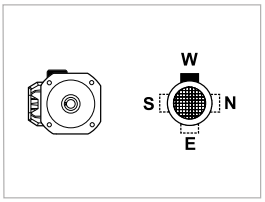

B52

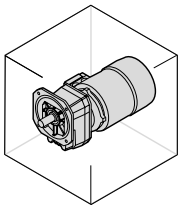

_S

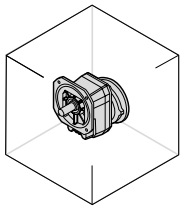

_P(IEC)

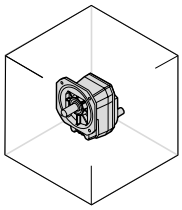

_HS

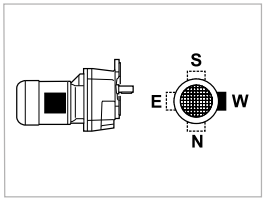

V1

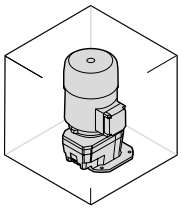

_S

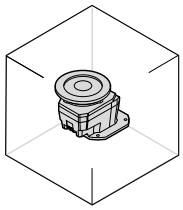

_P(IEC)

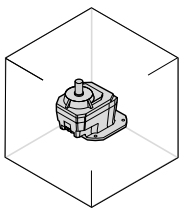

_HS

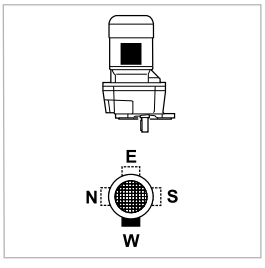

V3

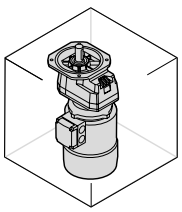

_S

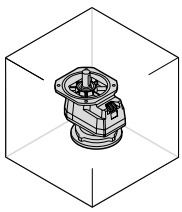

_P(IEC)

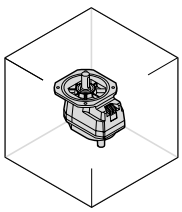

_HS

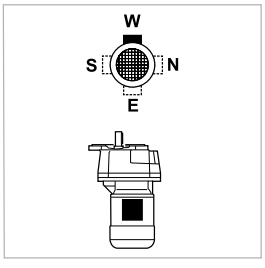

W = Default

72 OVERHUNG LOADS

External transmissions keyed onto input and/or output shaft generate loads that act radially onto same shaft.
Resulting shaft loading must be compatible with both the bearing and the shaft capacity. Namely shaft loading (R_{c1} for input shaft, R_{c2} for output shaft), must be equal or lower than admissible overhung load capacity for shaft under study (R_{n1} for input shaft, R_{n2} for output shaft). OHL capability listed in the rating chart section.
In the formulas given below, index (1) applies to parameters relating to input shaft, whereas index (2) refers to output shaft.
The load generated by an external transmission can be calculated with close approximation by the following equations:

$$R_{c1}\,[N] = \frac{2000 \cdot M_1[Nm] \cdot K_r}{d\,[mm]} \quad ; \quad R_{c2}\,[N] = \frac{2000 \cdot M_2[Nm] \cdot K_r}{d\,[mm]} \qquad (44)$$

(E 65)

M_1 [Nm]	Torque applied to input shaft
M_2 [Nm]	Torque drawn at output shaft
d [mm]	Pitch diameter of element keyed onto shaft
K_r = 1	Chain transmission

K_r = 1,25	Gear transmission
K_r = 1,5	V-belt transmission
K_r = 2,0	Flat belt transmission

Verification of OHL capability varies depending on whether load applies at midpoint of shaft or it is shifted further out:

(E 66)

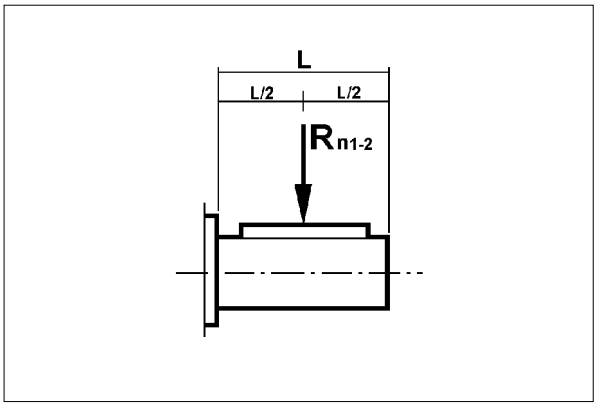

(E 67)

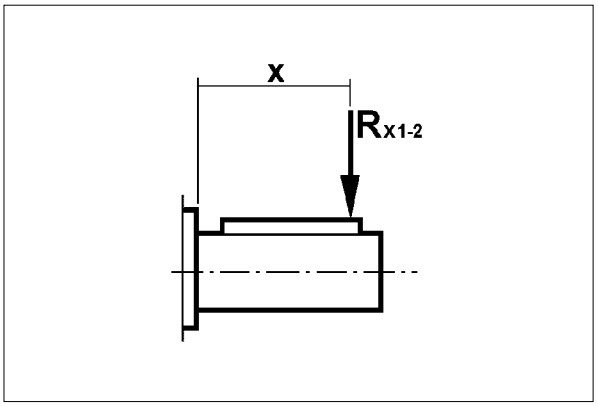

a) Load applied at midpoint of shaft, tab. (E66)

A comparison of shaft loading with catalogue OHL ratings should verify the following condition:

$Rc1 \leq Rn1$ [input shaft]

or

$Rc2 \leq Rn2$ [output shaft]

b) Load off the midpoint tab. (E67)

When load is shifted at an “x” distance from shaft shoulder, permissible load must be calculated for that distance.
Revised permissible overhung loads Rx1 (input) and Rx2 (output) are calculated respectively from original rated values Rn1 and Rn2 through factor:

$$\frac{a}{b+x} \qquad (45)$$

(E 68)

	Load location factors					
	Output shaft			Input shaft		
	a	**b**	**c**	**a**	**b**	**c**
S 10 1	61	46	200	21	1	300
S 20 1	73.5	53.5	270	40	20	350
S 30 1	91.5	66.5	380	38.5	18.5	350
S 40 1	126.5	96.5	600	49.5	24.5	450
S 50 1	153.5	113.5	680	49.5	24.5	450

Verification procedure is described here after.

INPUT SHAFT

1. Calculate:

$$R_{x1} = R_{n1} \cdot \frac{a}{b+x} \qquad (46)$$

N.B. Subject to condition:

$$\frac{L}{2} \leq x \leq c \qquad (47)$$

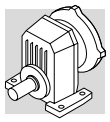

Finally, the following condition must be verified:

$$R_{c1} \leq R_{x1} \qquad (48)$$

OUTPUT SHAFT

1. Calculate:

$$R_{x2} = R_{n2} \cdot \frac{a}{b + x} \qquad (49)$$

N.B. Subject to condition:

$$\frac{L}{2} \leq x \leq c \qquad (50)$$

Finally, the following condition must be verified:

$$R_{c2} \leq R_{x2} \qquad (51)$$

73 THRUST LOADS, A_{n1}, A_{n2}

Permissible thrust loads on input [A_{n1}] and output [A_{n2}] shafts are obtained from the radial loading for the shaft under consideration [R_{n1}] and [R_{n2}] through the following equation:

$$A_{n1} = R_{n1} \cdot 0.2$$
$$A_{n2} = R_{n2} \cdot 0.2 \qquad (52)$$

The thrust loads calculated through these formulas apply to thrust forces occurring at the same time as rated radial loads.
In the only case that no overhung load acts on the shaft the value of the admissible thrust load [A_n] amounts to 50% of rated OHL [R_n] on same shaft.
Where thrust loads exceed permissible value or largely prevail over radial loads, contact Bonfiglioli Riduttori for an in-depth analysis of the application.

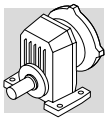

74 GEARMOTOR RATING CHARTS

0.12 kW

n_2 min-1	M_2 Nm	S	i	R_{n2} N	IE2	IE3		IEC IE2	IEC IE3	
69.0	16.2	2.2	13.1	2400				**S301_13.1 P63 BE63A4**	**S301_13.1 P63 BX63A4**	588
113.0	10.0	1.7	12.4	1500	**S201_12.4 S05 ME05A4**	**S201_12.4 S05 MX05A4**	585	**S201_12.4 P63 BE63A4**	**S201_12.4 P63 BX63A4**	586
114.0	9.9	1.0	12.3	1000	**S101_12.3 S05 ME05A4**	**S101_12.3 S05 MX05A4**	583	**S101_12.3 P63 BE63A4**	**S101_12.3 P63 BX63A4**	584
130.0	8.6	2.0	10.8	1500	**S201_10.8 S05 ME05A4**	**S201_10.8 S05 MX05A4**	585	**S201_10.8 P63 BE63A4**	**S201_10.8 P63 BX63A4**	586
136.0	8.3	1.2	10.3	960	**S101_10.3 S05 ME05A4**	**S101_10.3 S05 MX05A4**	583	**S101_10.3 P63 BE63A4**	**S101_10.3 P63 BX63A4**	584
158.0	7.1	1.4	8.9	920	**S101_8.9 S05 ME05A4**	**S101_8.9 S05 MX05A4**	583	**S101_8.9 P63 BE63A4**	**S101_8.9 P63 BX63A4**	584
165.0	6.8	2.5	8.5	1500	**S201_8.5 S05 ME05A4**	**S201_8.5 S05 MX05A4**	585	**S201_8.5 P63 BE63A4**	**S201_8.5 P63 BX63A4**	586
203.0	5.5	2.7	6.9	860	**S101_6.9 S05 ME05A4**	**S101_6.9 S05 MX05A4**	583	**S101_6.9 P63 BE63A4**	**S101_6.9 P63 BX63A4**	584
229.0	4.9	3.1	6.1	830	**S101_6.1 S05 ME05A4**	**S101_6.1 S05 MX05A4**	583	**S101_6.1 P63 BE63A4**	**S101_6.1 P63 BX63A4**	584
296.0	3.8	3.2	4.7	770	**S101_4.7 S05 ME05A4**	**S101_4.7 S05 MX05A4**	583	**S101_4.7 P63 BE63A4**	**S101_4.7 P63 BX63A4**	584
364.0	3.1	3.9	3.8	720	**S101_3.8 S05 ME05A4**	**S101_3.8 S05 MX05A4**	583	**S101_3.8 P63 BE63A4**	**S101_3.8 P63 BX63A4**	584
438.0	2.6	4.7	3.2	680	**S101_3.2 S05 ME05A4**	**S101_3.2 S05 MX05A4**	583	**S101_3.2 P63 BE63A4**	**S101_3.2 P63 BX63A4**	584
560.0	2.0	5.0	2.5	630	**S101_2.5 S05 ME05A4**	**S101_2.5 S05 MX05A4**	583	**S101_2.5 P63 BE63A4**	**S101_2.5 P63 BX63A4**	584
747.0	1.5	6.6	1.9	580	**S101_1.9 S05 ME05A4**	**S101_1.9 S05 MX05A4**	583	**S101_1.9 P63 BE63A4**	**S101_1.9 P63 BX63A4**	584
985.0	1.1	8.8	1.4	530	**S101_1.4 S05 ME05A4**	**S101_1.4 S05 MX05A4**	583	**S101_1.4 P63 BE63A4**	**S101_1.4 P63 BX63A4**	584

0.12 kW

n_2 min-1	M_2 Nm	S	i	R_{n2} N	IE3		IEC IE3	
69.0	16.2	2.2	13.1	2400			**S301_13.1 P63 BXN63MA4**	588
113.0	10.0	1.7	12.4	1500	**S201_12.4 SX05 MXN05MA4**	585	**S201_12.4 P63 BXN63MA4**	586
114.0	9.9	1.0	12.3	1000	**S101_12.3 SX05 MXN05MA4**	583	**S101_12.3 P63 BXN63MA4**	584
130.0	8.6	2.0	10.8	1500	**S201_10.8 SX05 MXN05MA4**	585	**S201_10.8 P63 BXN63MA4**	586
136.0	8.3	1.2	10.3	960	**S101_10.3 SX05 MXN05MA4**	583	**S101_10.3 P63 BXN63MA4**	584
158.0	7.1	1.4	8.9	920	**S101_8.9 SX05 MXN05MA4**	583	**S101_8.9 P63 BXN63MA4**	584
165.0	6.8	2.5	8.5	1500	**S201_8.5 SX05 MXN05MA4**	585	**S201_8.5 P63 BXN63MA4**	586
203.0	5.5	2.7	6.9	860	**S101_6.9 SX05 MXN05MA4**	583	**S101_6.9 P63 BXN63MA4**	584
229.0	4.9	3.1	6.1	830	**S101_6.1 SX05 MXN05MA4**	583	**S101_6.1 P63 BXN63MA4**	584
296.0	3.8	3.2	4.7	770	**S101_4.7 SX05 MXN05MA4**	583	**S101_4.7 P63 BXN63MA4**	584
364.0	3.1	3.9	3.8	720	**S101_3.8 SX05 MXN05MA4**	583	**S101_3.8 P63 BXN63MA4**	584
438.0	2.6	4.7	3.2	680	**S101_3.2 SX05 MXN05MA4**	583	**S101_3.2 P63 BXN63MA4**	584
560.0	2.0	5.0	2.5	630	**S101_2.5 SX05 MXN05MA4**	583	**S101_2.5 P63 BXN63MA4**	584
747.0	1.5	6.6	1.9	580	**S101_1.9 SX05 MXN05MA4**	583	**S101_1.9 P63 BXN63MA4**	584
985.0	1.1	8.8	1.4	530	**S101_1.4 SX05 MXN05MA4**	583	**S101_1.4 P63 BXN63MA4**	584

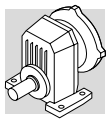

0.18 kW

n_2 min-1	M_2 Nm	S	i	R_{n2} N	IE2	IE3		IEC IE2	IEC IE3	
106.0	15.9	1.9	13.1	2400				**S301_13.1 P63 BE63B4**	**S301_13.1 P63 BX63B4**	588
112.0	15.1	1.1	12.4	1500	**S201_12.4 S05 ME05B4**	**S201_12.4 S05 MX05B4**	585	**S201_12.4 P63 BE63B4**	**S201_12.4 P63 BX63B4**	586
112.0	15.0	3.3	12.4	3800				**S401_12.4 P63 BE63B4**	**S401_12.4 P63 BX63B4**	590
129.0	13.0	1.3	10.8	1500	**S201_10.8 S05 ME05B4**	**S201_10.8 S05 MX05B4**	585	**S201_10.8 P63 BE63B4**	**S201_10.8 P63 BX63B4**	586
135.0	12.5	2.4	10.3	2330				**S301_10.3 P63 BE63B4**	**S301_10.3 P63 BX63B4**	588
156.0	10.8	2.8	8.9	2230				**S301_8.9 P63 BE63B4**	**S301_8.9 P63 BX63B4**	588
157.0	10.8	0.9	8.9	880	**S101_8.9 S05 ME05B4**	**S101_8.9 S05 MX05B4**	583	**S101_8.9 P63 BE63B4**	**S101_8.9 P63 BX63B4**	584
164.0	10.3	1.7	8.5	1500	**S201_8.5 S05 ME05B4**	**S201_8.5 S05 MX05B4**	585	**S201_8.5 P63 BE63B4**	**S201_8.5 P63 BX63B4**	586
192.0	8.8	3.0	7.2	1500	**S201_7.2 S05 ME05B4**	**S201_7.2 S05 MX05B4**	585	**S201_7.2 P63 BE63B4**	**S201_7.2 P63 BX63B4**	586
201.0	8.4	1.8	6.9	820	**S101_6.9 S05 ME05B4**	**S101_6.9 S05 MX05B4**	583	**S101_6.9 P63 BE63B4**	**S101_6.9 P63 BX63B4**	584
227.0	7.4	2.0	6.1	800	**S101_6.1 S05 ME05B4**	**S101_6.1 S05 MX05B4**	583	**S101_6.1 P63 BE63B4**	**S101_6.1 P63 BX63B4**	584
294.0	5.7	2.1	4.7	750	**S101_4.7 S05 ME05B4**	**S101_4.7 S05 MX05B4**	583	**S101_4.7 P63 BE63B4**	**S101_4.7 P63 BX63B4**	584
361.0	4.7	2.6	3.8	700	**S101_3.8 S05 ME05B4**	**S101_3.8 S05 MX05B4**	583	**S101_3.8 P63 BE63B4**	**S101_3.8 P63 BX63B4**	584
434.0	3.9	3.1	3.2	670	**S101_3.2 S05 ME05B4**	**S101_3.2 S05 MX05B4**	583	**S101_3.2 P63 BE63B4**	**S101_3.2 P63 BX63B4**	584
556.0	3.0	3.3	2.5	620	**S101_2.5 S05 ME05B4**	**S101_2.5 S05 MX05B4**	583	**S101_2.5 P63 BE63B4**	**S101_2.5 P63 BX63B4**	584
741.0	2.3	4.4	1.9	570	**S101_1.9 S05 ME05B4**	**S101_1.9 S05 MX05B4**	583	**S101_1.9 P63 BE63B4**	**S101_1.9 P63 BX63B4**	584
978.0	1.7	5.8	1.4	520	**S101_1.4 S05 ME05B4**	**S101_1.4 S05 MX05B4**	583	**S101_1.4 P63 BE63B4**	**S101_1.4 P63 BX63B4**	584

0.18 kW

n_2 min-1	M_2 Nm	S	i	R_{n2} N	IE3		IEC IE3	
106.0	15.9	1.9	13.1	2400			**S301_13.1 P63 BXN63MB4**	588
112.0	15.1	1.1	12.4	1500	**S201_12.4 SX05 MXN05MB4**	585	**S201_12.4 P63 BXN63MB4**	586
112.0	15.0	3.3	12.4	3800			**S401_12.4 P63 BXN63MB4**	590
129.0	13.0	1.3	10.8	1500	**S201_10.8 SX05 MXN05MB4**	585	**S201_10.8 P63 BXN63MB4**	586
135.0	12.5	2.4	10.3	2330			**S301_10.3 P63 BXN63MB4**	588
156.0	10.8	2.8	8.9	2230			**S301_8.9 P63 BXN63MB4**	588
157.0	10.8	0.9	8.9	880	**S101_8.9 SX05 MXN05MB4**	583	**S101_8.9 P63 BXN63MB4**	584
164.0	10.3	1.7	8.5	1500	**S201_8.5 SX05 MXN05MB4**	585	**S201_8.5 P63 BXN63MB4**	586
192.0	8.8	3.0	7.2	1500	**S201_7.2 SX05 MXN05MB4**	585	**S201_7.2 P63 BXN63MB4**	586
201.0	8.4	1.8	6.9	820	**S101_6.9 SX05 MXN05MB4**	583	**S101_6.9 P63 BXN63MB4**	584
227.0	7.4	2.0	6.1	800	**S101_6.1 SX05 MXN05MB4**	583	**S101_6.1 P63 BXN63MB4**	584
294.0	5.7	2.1	4.7	750	**S101_4.7 SX05 MXN05MB4**	583	**S101_4.7 P63 BXN63MB4**	584
361.0	4.7	2.6	3.8	700	**S101_3.8 SX05 MXN05MB4**	583	**S101_3.8 P63 BXN63MB4**	584
434.0	3.9	3.1	3.2	670	**S101_3.2 SX05 MXN05MB4**	583	**S101_3.2 P63 BXN63MB4**	584
556.0	3.0	3.3	2.5	620	**S101_2.5 SX05 MXN05MB4**	583	**S101_2.5 P63 BXN63MB4**	584
741.0	2.3	4.4	1.9	570	**S101_1.9 SX05 MXN05MB4**	583	**S101_1.9 P63 BXN63MB4**	584
978.0	1.7	5.8	1.4	520	**S101_1.4 SX05 MXN05MB4**	583	**S101_1.4 P63 BXN63MB4**	584

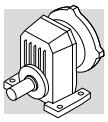

0.25 kW

n_2 min-1	M_2 Nm	S	i	R_{n2} N	IE2	IE3		IEC IE2	IEC IE3	
105.0	22.3	1.3	13.1	2400	**S301_13.1 S1 ME1SA4**	**S301_13.1 S1 MX1SA4**	587	**S301_13.1 P71 BE71A4**	**S301_13.1 P71 BX71A4**	588
111.0	21.1	2.4	12.4	3800				**S401_12.4 P71 BE71A4**	**S401_12.4 P71 BX71A4**	590
128.0	18.3	0.9	10.8	1500	**S201_10.8 S1 ME1SA4**	**S201_10.8 S1 MX1SA4**	585	**S201_10.8 P71 BE71A4**	**S201_10.8 P71 BX71A4**	586
129.0	18.2	2.8	10.7	3800				**S401_10.7 P71 BE71A4**	**S401_10.7 P71 BX71A4**	590
133.0	17.5	1.7	10.3	2300	**S301_10.3 S1 ME1SA4**	**S301_10.3 S1 MX1SA4**	587	**S301_10.3 P71 BE71A4**	**S301_10.3 P71 BX71A4**	588
155.0	15.1	2.0	8.9	2200	**S301_8.9 S1 ME1SA4**	**S301_8.9 S1 MX1SA4**	587	**S301_8.9 P71 BE71A4**	**S301_8.9 P71 BX71A4**	588
162.0	14.5	1.2	8.5	1500	**S201_8.5 S1 ME1SA4**	**S201_8.5 S1 MX1SA4**	585	**S201_8.5 P71 BE71A4**	**S201_8.5 P71 BX71A4**	586
190.0	12.3	2.1	7.2	1500	**S201_7.2 S1 ME1SA4**	**S201_7.2 S1 MX1SA4**	585	**S201_7.2 P71 BE71A4**	**S201_7.2 P71 BX71A4**	586
199.0	11.7	1.3	6.9	780	**S101_6.9 S1 ME1SA4**	**S101_6.9 S1 MX1SA4**	583	**S101_6.9 P71 BE71A4**	**S101_6.9 P71 BX71A4**	584
225.0	10.4	1.4	6.1	770	**S101_6.1 S1 ME1SA4**	**S101_6.1 S1 MX1SA4**	583	**S101_6.1 P71 BE71A4**	**S101_6.1 P71 BX71A4**	584
236.0	9.9	2.6	5.8	1430	**S201_5.8 S1 ME1SA4**	**S201_5.8 S1 MX1SA4**	585	**S201_5.8 P71 BE71A4**	**S201_5.8 P71 BX71A4**	586
288.0	8.1	3.2	4.8	1350	**S201_4.8 S1 ME1SA4**	**S201_4.8 S1 MX1SA4**	585	**S201_4.8 P71 BE71A4**	**S201_4.8 P71 BX71A4**	586
291.0	8.0	1.5	4.7	720	**S101_4.7 S1 ME1SA4**	**S101_4.7 S1 MX1SA4**	583	**S101_4.7 P71 BE71A4**	**S101_4.7 P71 BX71A4**	584
358.0	6.5	1.8	3.8	680	**S101_3.8 S1 ME1SA4**	**S101_3.8 S1 MX1SA4**	583	**S101_3.8 P71 BE71A4**	**S101_3.8 P71 BX71A4**	584
430.0	5.4	2.2	3.2	650	**S101_3.2 S1 ME1SA4**	**S101_3.2 S1 MX1SA4**	583	**S101_3.2 P71 BE71A4**	**S101_3.2 P71 BX71A4**	584
550.0	4.3	2.4	2.5	610	**S101_2.5 S1 ME1SA4**	**S101_2.5 S1 MX1SA4**	583	**S101_2.5 P71 BE71A4**	**S101_2.5 P71 BX71A4**	584
733.0	3.2	3.1	1.9	560	**S101_1.9 S1 ME1SA4**	**S101_1.9 S1 MX1SA4**	583	**S101_1.9 P71 BE71A4**	**S101_1.9 P71 BX71A4**	584
968.0	2.4	4.1	1.4	510	**S101_1.4 S1 ME1SA4**	**S101_1.4 S1 MX1SA4**	583	**S101_1.4 P71 BE71A4**	**S101_1.4 P71 BX71A4**	584

0.25 kW

n_2 min-1	M_2 Nm	S	i	R_{n2} N	IE3		IEC IE3	
105.0	22.3	1.3	13.1	2400	**S301_13.1 SX10 MXN10MA4**	587	**S301_13.1 P71 BXN71MA4**	588
111.0	21.1	2.4	12.4	3800			**S401_12.4 P71 BXN71MA4**	590
128.0	18.3	0.9	10.8	1500	**S201_10.8 SX10 MXN10MA4**	585	**S201_10.8 P71 BXN71MA4**	586
129.0	18.2	2.8	10.7	3800			**S401_10.7 P71 BXN71MA4**	590
133.0	17.5	1.7	10.3	2300	**S301_10.3 SX10 MXN10MA4**	587	**S301_10.3 P71 BXN71MA4**	588
155.0	15.1	2.0	8.9	2200	**S301_8.9 SX10 MXN10MA4**	587	**S301_8.9 P71 BXN71MA4**	588
162.0	14.5	1.2	8.5	1500	**S201_8.5 SX10 MXN10MA4**	585	**S201_8.5 P71 BXN71MA4**	586
190.0	12.3	2.1	7.2	1500	**S201_7.2 SX10 MXN10MA4**	585	**S201_7.2 P71 BXN71MA4**	586
199.0	11.7	1.3	6.9	780	**S101_6.9 SX10 MXN10MA4**	583	**S101_6.9 P71 BXN71MA4**	584
225.0	10.4	1.4	6.1	770	**S101_6.1 SX10 MXN10MA4**	583	**S101_6.1 P71 BXN71MA4**	584
236.0	9.9	2.6	5.8	1430	**S201_5.8 SX10 MXN10MA4**	585	**S201_5.8 P71 BXN71MA4**	586
288.0	8.1	3.2	4.8	1350	**S201_4.8 SX10 MXN10MA4**	585	**S201_4.8 P71 BXN71MA4**	586
291.0	8.0	1.5	4.7	720	**S101_4.7 SX10 MXN10MA4**	583	**S101_4.7 P71 BXN71MA4**	584
358.0	6.5	1.8	3.8	680	**S101_3.8 SX10 MXN10MA4**	583	**S101_3.8 P71 BXN71MA4**	584
430.0	5.4	2.2	3.2	650	**S101_3.2 SX10 MXN10MA4**	583	**S101_3.2 P71 BXN71MA4**	584
550.0	4.3	2.4	2.5	610	**S101_2.5 SX10 MXN10MA4**	583	**S101_2.5 P71 BXN71MA4**	584
733.0	3.2	3.1	1.9	560	**S101_1.9 SX10 MXN10MA4**	583	**S101_1.9 P71 BXN71MA4**	584
968.0	2.4	4.1	1.4	510	**S101_1.4 SX10 MXN10MA4**	583	**S101_1.4 P71 BXN71MA4**	584

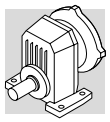

0.37 kW

n_2 min-1	M_2 Nm	S	i	R_{n2} N	IE2	IE3		IEC IE2	IEC IE3	
104.0	33.2	0.9	13.1	2390	**S301_13.1 S1 ME1SB4**	**S301_13.1 S1 MX1SB4**	587	**S301_13.1 P71 BE71B4**	**S301_13.1 P71 BX71B4**	588
106.0	32.6	3.1	12.9	5650				**S501_12.9 P71 BE71B4**	**S501_12.9 P71 BX71B4**	592
110.0	31.3	1.6	12.4	3800				**S401_12.4 P71 BE71B4**	**S401_12.4 P71 BX71B4**	590
128.0	27.0	1.9	10.7	3800				**S401_10.7 P71 BE71B4**	**S401_10.7 P71 BX71B4**	590
133.0	26.0	1.2	10.3	2240	**S301_10.3 S1 ME1SB4**	**S301_10.3 S1 MX1SB4**	587	**S301_10.3 P71 BE71B4**	**S301_10.3 P71 BX71B4**	588
154.0	22.5	1.3	8.9	2150	**S301_8.9 S1 ME1SB4**	**S301_8.9 S1 MX1SB4**	587	**S301_8.9 P71 BE71B4**	**S301_8.9 P71 BX71B4**	588
159.0	21.8	2.7	8.6	3610				**S401_8.6 P71 BE71B4**	**S401_8.6 P71 BX71B4**	590
190.0	18.3	1.4	7.2	1460	**S201_7.2 S1 ME1SB4**	**S201_7.2 S1 MX1SB4**	585	**S201_7.2 P71 BE71B4**	**S201_7.2 P71 BX71B4**	586
193.0	17.9	2.8	7.1	2020	**S301_7.1 S1 ME1SB4**	**S301_7.1 S1 MX1SB4**	587	**S301_7.1 P71 BE71B4**	**S301_7.1 P71 BX71B4**	588
224.0	15.4	1.0	6.1	710	**S101_6.1 S1 ME1SB4**	**S101_6.1 S1 MX1SB4**	583	**S101_6.1 P71 BE71B4**	**S101_6.1 P71 BX71B4**	584
234.0	14.8	3.4	5.8	1900	**S301_5.8 S1 ME1SB4**	**S301_5.8 S1 MX1SB4**	587	**S301_5.8 P71 BE71B4**	**S301_5.8 P71 BX71B4**	588
235.0	14.7	1.8	5.8	1390	**S201_5.8 S1 ME1SB4**	**S201_5.8 S1 MX1SB4**	585	**S201_5.8 P71 BE71B4**	**S201_5.8 P71 BX71B4**	586
287.0	12.1	2.2	4.8	1310	**S201_4.8 S1 ME1SB4**	**S201_4.8 S1 MX1SB4**	585	**S201_4.8 P71 BE71B4**	**S201_4.8 P71 BX71B4**	586
290.0	11.9	1.0	4.7	670	**S101_4.7 S1 ME1SB4**	**S101_4.7 S1 MX1SB4**	583	**S101_4.7 P71 BE71B4**	**S101_4.7 P71 BX71B4**	584
348.0	9.9	2.6	3.9	1240	**S201_3.9 S1 ME1SB4**	**S201_3.9 S1 MX1SB4**	585	**S201_3.9 P71 BE71B4**	**S201_3.9 P71 BX71B4**	586
356.0	9.7	1.2	3.8	640	**S101_3.8 S1 ME1SB4**	**S101_3.8 S1 MX1SB4**	583	**S101_3.8 P71 BE71B4**	**S101_3.8 P71 BX71B4**	584
428.0	8.1	1.5	3.2	620	**S101_3.2 S1 ME1SB4**	**S101_3.2 S1 MX1SB4**	583	**S101_3.2 P71 BE71B4**	**S101_3.2 P71 BX71B4**	584
440.0	7.9	3.3	3.1	1160	**S201_3.1 S1 ME1SB4**	**S201_3.1 S1 MX1SB4**	585	**S201_3.1 P71 BE71B4**	**S201_3.1 P71 BX71B4**	586
548.0	6.3	1.6	2.5	580	**S101_2.5 S1 ME1SB4**	**S101_2.5 S1 MX1SB4**	583	**S101_2.5 P71 BE71B4**	**S101_2.5 P71 BX71B4**	584
731.0	4.7	2.1	1.9	540	**S101_1.9 S1 ME1SB4**	**S101_1.9 S1 MX1SB4**	583	**S101_1.9 P71 BE71B4**	**S101_1.9 P71 BX71B4**	584
964.0	3.6	2.8	1.4	500	**S101_1.4 S1 ME1SB4**	**S101_1.4 S1 MX1SB4**	583	**S101_1.4 P71 BE71B4**	**S101_1.4 P71 BX71B4**	584

0.37 kW

n_2 min-1	M_2 Nm	S	i	R_{n2} N	IE3		IEC IE3	
104.0	33.2	0.9	13.1	2390	**S301_13.1 SX10 MXN10MB4**	587	**S301_13.1 P71 BXN71MB4**	588
106.0	32.6	3.1	12.9	5650			**S501_12.9 P71 BXN71MB4**	592
110.0	31.3	1.6	12.4	3800			**S401_12.4 P71 BXN71MB4**	590
128.0	27.0	1.9	10.7	3800			**S401_10.7 P71 BXN71MB4**	590
133.0	26.0	1.2	10.3	2240	**S301_10.3 SX10 MXN10MB4**	587	**S301_10.3 P71 BXN71MB4**	588
154.0	22.5	1.3	8.9	2150	**S301_8.9 SX10 MXN10MB4**	587	**S301_8.9 P71 BXN71MB4**	588
159.0	21.8	2.7	8.6	3610			**S401_8.6 P71 BXN71MB4**	590
190.0	18.3	1.4	7.2	1460	**S201_7.2 SX10 MXN10MB4**	585	**S201_7.2 P71 BXN71MB4**	586
193.0	17.9	2.8	7.1	2020	**S301_7.1 SX10 MXN10MB4**	587	**S301_7.1 P71 BXN71MB4**	588
224.0	15.4	1.0	6.1	710	**S101_6.1 SX10 MXN10MB4**	583	**S101_6.1 P71 BXN71MB4**	584
234.0	14.8	3.4	5.8	1900	**S301_5.8 SX10 MXN10MB4**	587	**S301_5.8 P71 BXN71MB4**	588
235.0	14.7	1.8	5.8	1390	**S201_5.8 SX10 MXN10MB4**	585	**S201_5.8 P71 BXN71MB4**	586
287.0	12.1	2.2	4.8	1310	**S201_4.8 SX10 MXN10MB4**	585	**S201_4.8 P71 BXN71MB4**	586
290.0	11.9	1.0	4.7	670	**S101_4.7 SX10 MXN10MB4**	583	**S101_4.7 P71 BXN71MB4**	584
348.0	9.9	2.6	3.9	1240	**S201_3.9 SX10 MXN10MB4**	585	**S201_3.9 P71 BXN71MB4**	586
356.0	9.7	1.2	3.8	640	**S101_3.8 SX10 MXN10MB4**	583	**S101_3.8 P71 BXN71MB4**	584
428.0	8.1	1.5	3.2	620	**S101_3.2 SX10 MXN10MB4**	583	**S101_3.2 P71 BXN71MB4**	584
440.0	7.9	3.3	3.1	1160	**S201_3.1 SX10 MXN10MB4**	585	**S201_3.1 P71 BXN71MB4**	586
548.0	6.3	1.6	2.5	580	**S101_2.5 SX10 MXN10MB4**	583	**S101_2.5 P71 BXN71MB4**	584
731.0	4.7	2.1	1.9	540	**S101_1.9 SX10 MXN10MB4**	583	**S101_1.9 P71 BXN71MB4**	584
964.0	3.6	2.8	1.4	500	**S101_1.4 SX10 MXN10MB4**	583	**S101_1.4 P71 BXN71MB4**	584

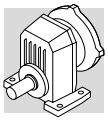

0.55 kW

n_2 min-1	M_2 Nm	S	i	R_{n2} N	IE2	IE3		IEC IE2	IEC IE3	
107.0	48.1	2.1	12.9	5560	**S501_12.9 S2 ME2SA4**	**S501_12.9 S2 MX2SA4**	591	**S501_12.9 P80 BE80A4**	**S501_12.9 P80 BX80A4**	592
111.0	46.3	1.1	12.4	3800	**S401_12.4 S2 ME2SA4**	**S401_12.4 S2 MX2SA4**	589	**S401_12.4 P80 BE80A4**	**S401_12.4 P80 BX80A4**	590
129.0	39.8	1.3	10.7	3770	**S401_10.7 S2 ME2SA4**	**S401_10.7 S2 MX2SA4**	589	**S401_10.7 P80 BE80A4**	**S401_10.7 P80 BX80A4**	590
132.0	39.0	2.8	10.5	5220	**S501_10.5 S2 ME2SA4**	**S501_10.5 S2 MX2SA4**	591	**S501_10.5 P80 BE80A4**	**S501_10.5 P80 BX80A4**	592
155.0	33.2	0.9	8.9	2060	**S301_8.9 S2 ME2SA4**	**S301_8.9 S2 MX2SA4**	587	**S301_8.9 P80 BE80A4**	**S301_8.9 P80 BX80A4**	588
157.0	32.7	3.4	8.8	4940	**S501_8.8 S2 ME2SA4**	**S501_8.8 S2 MX2SA4**	591	**S501_8.8 P80 BE80A4**	**S501_8.8 P80 BX80A4**	592
160.0	32.2	1.9	8.6	3540	**S401_8.6 S2 ME2SA4**	**S401_8.6 S2 MX2SA4**	589	**S401_8.6 P80 BE80A4**	**S401_8.6 P80 BX80A4**	590
191.0	26.9	1.0	7.2	1370	**S201_7.2 S2 ME2SA4**	**S201_7.2 S2 MX2SA4**	585	**S201_7.2 P80 BE80A4**	**S201_7.2 P80 BX80A4**	586
193.0	26.7	3.0	7.2	3350	**S401_7.2 S2 ME2SA4**	**S401_7.2 S2 MX2SA4**	589	**S401_7.2 P80 BE80A4**	**S401_7.2 P80 BX80A4**	590
195.0	26.4	1.9	7.1	1940	**S301_7.1 S2 ME2SA4**	**S301_7.1 S2 MX2SA4**	587	**S301_7.1 P80 BE80A4**	**S301_7.1 P80 BX80A4**	588
236.0	21.8	2.3	5.8	1840	**S301_5.8 S2 ME2SA4**	**S301_5.8 S2 MX2SA4**	587	**S301_5.8 P80 BE80A4**	**S301_5.8 P80 BX80A4**	588
237.0	21.7	1.2	5.8	1310	**S201_5.8 S2 ME2SA4**	**S201_5.8 S2 MX2SA4**	585	**S201_5.8 P80 BE80A4**	**S201_5.8 P80 BX80A4**	586
280.0	18.4	2.7	4.9	1760	**S301_4.9 S2 ME2SA4**	**S301_4.9 S2 MX2SA4**	587	**S301_4.9 P80 BE80A4**	**S301_4.9 P80 BX80A4**	588
289.0	17.8	1.5	4.8	1250	**S201_4.8 S2 ME2SA4**	**S201_4.8 S2 MX2SA4**	585	**S201_4.8 P80 BE80A4**	**S201_4.8 P80 BX80A4**	586
350.0	14.7	3.4	3.9	1650	**S301_3.9 S2 ME2SA4**	**S301_3.9 S2 MX2SA4**	587	**S301_3.9 P80 BE80A4**	**S301_3.9 P80 BX80A4**	588
351.0	14.7	1.8	3.9	1190	**S201_3.9 S2 ME2SA4**	**S201_3.9 S2 MX2SA4**	585	**S201_3.9 P80 BE80A4**	**S201_3.9 P80 BX80A4**	586
431.0	11.9	1.0	3.2	560	**S101_3.2 S2 ME2SA4**	**S101_3.2 S2 MX2SA4**	583	**S101_3.2 P80 BE80A4**	**S101_3.2 P80 BX80A4**	584
444.0	11.6	2.2	3.1	1120	**S201_3.1 S2 ME2SA4**	**S201_3.1 S2 MX2SA4**	585	**S201_3.1 P80 BE80A4**	**S201_3.1 P80 BX80A4**	586
552.0	9.3	1.1	2.5	540	**S101_2.5 S2 ME2SA4**	**S101_2.5 S2 MX2SA4**	583	**S101_2.5 P80 BE80A4**	**S101_2.5 P80 BX80A4**	584
566.0	9.1	2.9	2.4	1050	**S201_2.4 S2 ME2SA4**	**S201_2.4 S2 MX2SA4**	585	**S201_2.4 P80 BE80A4**	**S201_2.4 P80 BX80A4**	586
728.0	7.1	2.4	1.9	970	**S201_1.9 S2 ME2SA4**	**S201_1.9 S2 MX2SA4**	585	**S201_1.9 P80 BE80A4**	**S201_1.9 P80 BX80A4**	586
736.0	7.0	1.4	1.9	500	**S101_1.9 S2 ME2SA4**	**S101_1.9 S2 MX2SA4**	583	**S101_1.9 P80 BE80A4**	**S101_1.9 P80 BX80A4**	584
971.0	5.3	1.9	1.4	470	**S101_1.4 S2 ME2SA4**	**S101_1.4 S2 MX2SA4**	583	**S101_1.4 P80 BE80A4**	**S101_1.4 P80 BX80A4**	584

0.55 kW

n_2 min-1	M_2 Nm	S	i	R_{n2} N	IE3		IEC IE3	
107.0	48.1	2.1	12.9	5560			**S501_12.9 P80 BXN80MA4**	592
111.0	46.3	1.1	12.4	3800			**S401_12.4 P80 BXN80MA4**	590
129.0	39.8	1.3	10.7	3770			**S401_10.7 P80 BXN80MA4**	590
132.0	39.0	2.8	10.5	5220			**S501_10.5 P80 BXN80MA4**	592
155.0	33.2	0.9	8.9	2060			**S301_8.9 P80 BXN80MA4**	588
157.0	32.7	3.4	8.8	4940			**S501_8.8 P80 BXN80MA4**	592
160.0	32.2	1.9	8.6	3540			**S401_8.6 P80 BXN80MA4**	590
191.0	26.9	1.0	7.2	1370	**S201_7.2 SX20 MXN20MA4**	585	**S201_7.2 P80 BXN80MA4**	586
193.0	26.7	3.0	7.2	3350			**S401_7.2 P80 BXN80MA4**	590
195.0	26.4	1.9	7.1	1940			**S301_7.1 P80 BXN80MA4**	588
236.0	21.8	2.3	5.8	1840			**S301_5.8 P80 BXN80MA4**	588
237.0	21.7	1.2	5.8	1310	**S201_5.8 SX20 MXN20MA4**	585	**S201_5.8 P80 BXN80MA4**	586
280.0	18.4	2.7	4.9	1760			**S301_4.9 P80 BXN80MA4**	588
289.0	17.8	1.5	4.8	1250	**S201_4.8 SX20 MXN20MA4**	585	**S201_4.8 P80 BXN80MA4**	586
350.0	14.7	3.4	3.9	1650			**S301_3.9 P80 BXN80MA4**	588
351.0	14.7	1.8	3.9	1190	**S201_3.9 SX20 MXN20MA4**	585	**S201_3.9 P80 BXN80MA4**	586
431.0	11.9	1.0	3.2	560	**S101_3.2 SX20 MXN20MA4**	583	**S101_3.2 P80 BXN80MA4**	584
444.0	11.6	2.2	3.1	1120	**S201_3.1 SX20 MXN20MA4**	585	**S201_3.1 P80 BXN80MA4**	586
552.0	9.3	1.1	2.5	540	**S101_2.5 SX20 MXN20MA4**	583	**S101_2.5 P80 BXN80MA4**	584
566.0	9.1	2.9	2.4	1050	**S201_2.4 SX20 MXN20MA4**	585	**S201_2.4 P80 BXN80MA4**	586
728.0	7.1	2.4	1.9	970	**S201_1.9 SX20 MXN20MA4**	585	**S201_1.9 P80 BXN80MA4**	586
736.0	7.0	1.4	1.9	500	**S101_1.9 SX20 MXN20MA4**	583	**S101_1.9 P80 BXN80MA4**	584
971.0	5.3	1.9	1.4	470	**S101_1.4 SX20 MXN20MA4**	583	**S101_1.4 P80 BXN80MA4**	584
992.0	5.2	3.3	1.4	890			**S201_1.4 P80 BXN80MA4**	586

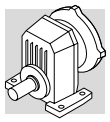

0.75 kW

n_2 min-1	M_2 Nm	S	i	R_{n2} N	IE2	IE3		IEC IE2	IEC IE3	
73	96	1.0	12.9	6170	**S501_12.9 S3 ME3SA6**		591	**S501_12.9 P90 BE90S6**		592
90	78	1.5	10.5	5810	**S501_10.5 S3 ME3SA6**		591	**S501_10.5 P90 BE90S6**		592
107	65	1.9	8.8	5520	**S501_8.8 S3 ME3SA6**		591	**S501_8.8 P90 BE90S6**		592
111	63	1.6	12.9	5460	**S501_12.9 S2 ME2SB4**	**S501_12.9 S2 MX2SB4**	591	**S501_12.9 P80 BE80B4**	**S501_12.9 P80 BX80B4**	592
127	55	2.5	7.4	5240	**S501_7.4 S3 ME3SA6**		591	**S501_7.4 P90 BE90S6**		592
131	53	1.7	7.2	3700	**S401_7.2 S3 ME3SA6**		589	**S401_7.2 P90 BE90S6**		590
134	52	1.0	10.7	3670	**S401_10.7 S2 ME2SB4**	**S401_10.7 S2 MX2SB4**	589	**S401_10.7 P80 BE80B4**	**S401_10.7 P80 BX80B4**	590
137	51	2.1	10.5	5130	**S501_10.5 S2 ME2SB4**	**S501_10.5 S2 MX2SB4**	591	**S501_10.5 P80 BE80B4**	**S501_10.5 P80 BX80B4**	592
155	45	2.3	6.1	3530	**S401_6.1 S3 ME3SA6**		589	**S401_6.1 P90 BE90S6**		590
161	44	1.3	5.8	1960	**S301_5.8 S3 ME3SA6**		587	**S301_5.8 P90 BE90S6**		588
163	43	2.6	8.8	4870	**S501_8.8 S2 ME2SB4**	**S501_8.8 S2 MX2SB4**	591	**S501_8.8 P80 BE80B4**	**S501_8.8 P80 BX80B4**	592
166	42	1.4	8.6	3460	**S401_8.6 S2 ME2SB4**	**S401_8.6 S2 MX2SB4**	589	**S401_8.6 P80 BE80B4**	**S401_8.6 P80 BX80B4**	590
191	37	1.6	4.9	1880	**S301_4.9 S3 ME3SA6**		587	**S301_4.9 P90 BE90S6**		588
194	36	2.9	4.8	3300	**S401_4.8 S3 ME3SA6**		589	**S401_4.8 P90 BE90S6**		590
200	35	2.3	7.2	3280	**S401_7.2 S2 ME2SB4**	**S401_7.2 S2 MX2SB4**	589	**S401_7.2 P80 BE80B4**	**S401_7.2 P80 BX80B4**	590
202	35	1.4	7.1	1860	**S301_7.1 S2 ME2SB4**	**S301_7.1 S2 MX2SB4**	587	**S301_7.1 P80 BE80B4**	**S301_7.1 P80 BX80B4**	588
221	32	2.5	12.9	4420	**S501_12.9 S2 ME2SA2**		591	**S501_12.9 P80 BE80A2**		592
230	31	1.3	12.4	3150	**S401_12.4 S2 ME2SA2**		589	**S401_12.4 P80 BE80A2**		590
236	30	3.0	6.1	3120	**S401_6.1 S2 ME2SB4**	**S401_6.1 S2 MX2SB4**	589	**S401_6.1 P80 BE80B4**	**S401_6.1 P80 BX80B4**	590
238	29	2.0	3.9	1780	**S301_3.9 S3 ME3SA6**		587	**S301_3.9 P90 BE90S6**		588
245	29	1.7	5.8	1780	**S301_5.8 S2 ME2SB4**	**S301_5.8 S2 MX2SB4**	587	**S301_5.8 P80 BE80B4**	**S301_5.8 P80 BX80B4**	588
246	29	0.9	5.8	1160	**S201_5.8 S2 ME2SB4**	**S201_5.8 S2 MX2SB4**	585	**S201_5.8 P80 BE80B4**	**S201_5.8 P80 BX80B4**	586
267	26	1.5	10.7	3000	**S401_10.7 S2 ME2SA2**		589	**S401_10.7 P80 BE80A2**		590
273	26	3.3	10.5	4140	**S501_10.5 S2 ME2SA2**		591	**S501_10.5 P80 BE80A2**		592
277	25	0.9	10.3	1730	**S301_10.3 S2 ME2SA2**		587	**S301_10.3 P80 BE80A2**		588
290	24	2.1	4.9	1700	**S301_4.9 S2 ME2SB4**	**S301_4.9 S2 MX2SB4**	587	**S301_4.9 P80 BE80B4**	**S301_4.9 P80 BX80B4**	588
300	23	1.1	4.8	1180	**S201_4.8 S2 ME2SB4**	**S201_4.8 S2 MX2SB4**	585	**S201_4.8 P80 BE80B4**	**S201_4.8 P80 BX80B4**	586
302	23	1.3	3.1	1160	**S201_3.1 S3 ME3SA6**		585	**S201_3.1 P90 BE90S6**		586
307	23	2.5	3.1	1670	**S301_3.1 S3 ME3SA6**		587	**S301_3.1 P90 BE90S6**		588
321	22	1.1	8.9	1660	**S301_8.9 S2 ME2SA2**		587	**S301_8.9 P80 BE80A2**		588
330	21	2.3	8.6	2820	**S401_8.6 S2 ME2SA2**		589	**S401_8.6 P80 BE80A2**		590
363	19.3	2.6	3.9	1600	**S301_3.9 S2 ME2SB4**	**S301_3.9 S2 MX2SB4**	587	**S301_3.9 P80 BE80B4**	**S301_3.9 P80 BX80B4**	588
364	19.3	1.3	3.9	1130	**S201_3.9 S2 ME2SB4**	**S201_3.9 S2 MX2SB4**	585	**S201_3.9 P80 BE80B4**	**S201_3.9 P80 BX80B4**	586
386	18.2	1.6	2.4	1110	**S201_2.4 S3 ME3SA6**		585	**S201_2.4 P90 BE90S6**		586
388	18.1	3.2	2.4	1560	**S301_2.4 S3 ME3SA6**		587	**S301_2.4 P90 BE90S6**		588
395	17.8	1.2	7.2	1120	**S201_7.2 S2 ME2SA2**		585	**S201_7.2 P80 BE80A2**		586
402	17.5	2.3	7.1	1560	**S301_7.1 S2 ME2SA2**		587	**S301_7.1 P80 BE80A2**		588
460	15.2	1.7	3.1	1070	**S201_3.1 S2 ME2SB4**	**S201_3.1 S2 MX2SB4**	585	**S201_3.1 P80 BE80B4**	**S201_3.1 P80 BX80B4**	586
467	15.0	3.3	3.1	1490	**S301_3.1 S2 ME2SB4**	**S301_3.1 S2 MX2SB4**	587	**S301_3.1 P80 BE80B4**	**S301_3.1 P80 BX80B4**	588
488	14.4	2.8	5.8	1480	**S301_5.8 S2 ME2SA2**		587	**S301_5.8 P80 BE80A2**		588
490	14.3	1.5	5.8	1060	**S201_5.8 S2 ME2SA2**		585	**S201_5.8 P80 BE80A2**		586
496	14.1	1.4	1.9	1040	**S201_1.9 S3 ME3SA6**		585	**S201_1.9 P90 BE90S6**		586
515	13.6	2.6	1.8	1440	**S301_1.8 S3 ME3SA6**		587	**S301_1.8 P90 BE90S6**		588
578	12.1	3.3	4.9	1410	**S301_4.9 S2 ME2SA2**		587	**S301_4.9 P80 BE80A2**		588
587	11.9	2.2	2.4	1010	**S201_2.4 S2 ME2SB4**	**S201_2.4 S2 MX2SB4**	585	**S201_2.4 P80 BE80B4**	**S201_2.4 P80 BX80B4**	586
591	11.9	4.2	2.4	1380	**S301_2.4 S2 ME2SB4**	**S301_2.4 S2 MX2SB4**	587	**S301_2.4 P80 BE80B4**	**S301_2.4 P80 BX80B4**	588
598	11.7	1.8	4.8	1010	**S201_4.8 S2 ME2SA2**		585	**S201_4.8 P80 BE80A2**		586
661	10.6	1.1	1.4	460	**S101_1.4 S3 ME3SA6**		583	**S101_1.4 P90 BE90S6**		584
668	10.5	3.3	1.4	1330	**S301_1.4 S3 ME3SA6**		587	**S301_1.4 P90 BE90S6**		588
676	10.4	1.9	1.4	960	**S201_1.4 S3 ME3SA6**		585	**S201_1.4 P90 BE90S6**		586

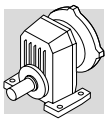

0.75 kW

n_2 min-1	M_2 Nm	S	i	R_{n2} N	IE2	IE3		IEC IE2	IEC IE3	
725	9.7	2.2	3.9	960	**S201_3.9 S2 ME2SA2**		585	**S201_3.9 P80 BE80A2**		586
741	9.5	1.1	3.8	480	**S101_3.8 S2 ME2SA2**		583	**S101_3.8 P80 BE80A2**		584
755	9.3	1.8	1.9	940	**S201_1.9 S2 ME2SB4**	**S201_1.9 S2 MX2SB4**	585	**S201_1.9 P80 BE80B4**	**S201_1.9 P80 BX80B4**	586
763	9.2	1.1	1.9	460	**S101_1.9 S2 ME2SB4**	**S101_1.9 S2 MX2SB4**	583	**S101_1.9 P80 BE80B4**	**S101_1.9 P80 BX80B4**	584
783	8.9	3.4	1.8	1280	**S301_1.8 S2 ME2SB4**	**S301_1.8 S2 MX2SB4**	587	**S301_1.8 P80 BE80B4**	**S301_1.8 P80 BX80B4**	588
891	7.9	1.3	3.2	460	**S101_3.2 S2 ME2SA2**		583	**S101_3.2 P80 BE80A2**		584
916	7.7	2.7	3.1	900	**S201_3.1 S2 ME2SA2**		585	**S201_3.1 P80 BE80A2**		586
1006	7.0	1.4	1.4	440	**S101_1.4 S2 ME2SB4**	**S101_1.4 S2 MX2SB4**	583	**S101_1.4 P80 BE80B4**	**S101_1.4 P80 BX80B4**	584
1028	6.8	2.5	1.4	860	**S201_1.4 S2 ME2SB4**	**S201_1.4 S2 MX2SB4**	585	**S201_1.4 P80 BE80B4**	**S201_1.4 P80 BX80B4**	586
1140	6.2	1.3	2.5	440	**S101_2.5 S2 ME2SA2**		583	**S101_2.5 P80 BE80A2**		584
1169	6.0	3.5	2.4	840	**S201_2.4 S2 ME2SA2**		585	**S201_2.4 P80 BE80A2**		586
1504	4.7	2.8	1.9	780	**S201_1.9 S2 ME2SA2**		585	**S201_1.9 P80 BE80A2**		586
1520	4.6	1.7	1.9	410	**S101_1.9 S2 ME2SA2**		583	**S101_1.9 P80 BE80A2**		584
2006	3.5	2.3	1.4	380	**S101_1.4 S2 ME2SA2**		583	**S101_1.4 P80 BE80A2**		584

0.75 kW

n_2 min-1	M_2 Nm	S	i	R_{n2} N	IE3		IEC IE3	
111	63	1.6	12.9	5460			**S501_12.9 P80 BXN80MB4**	592
134	52	1.0	10.7	3670			**S401_10.7 P80 BXN80MB4**	590
137	51	2.1	10.5	5130			**S501_10.5 P80 BXN80MB4**	592
163	43	2.6	8.8	4870			**S501_8.8 P80 BXN80MB4**	592
166	42	1.4	8.6	3460			**S401_8.6 P80 BXN80MB4**	590
200	35	2.3	7.2	3280			**S401_7.2 P80 BXN80MB4**	590
202	35	1.4	7.1	1860			**S301_7.1 P80 BXN80MB4**	588
236	30	3.0	6.1	3120			**S401_6.1 P80 BXN80MB4**	590
245	29	1.7	5.8	1780			**S301_5.8 P80 BXN80MB4**	588
246	29	0.9	5.8	1160	**SX201_5.8 SX20 MXN20B4**	585	**S201_5.8 P80 BXN80MB4**	586
290	24	2.1	4.9	1700			**S301_4.9 P80 BXN80MB4**	588
300	23	1.1	4.8	1180	**SX201_4.8 SX20 MXN20B4**	585	**S201_4.8 P80 BXN80MB4**	586
363	19.3	2.6	3.9	1600			**S301_3.9 P80 BXN80MB4**	588
364	19.3	1.3	3.9	1130	**SX201_3.9 SX20 MXN20B4**	585	**S201_3.9 P80 BXN80MB4**	586
460	15.2	1.7	3.1	1070	**SX201_3.1 SX20 MXN20B4**	585	**S201_3.1 P80 BXN80MB4**	586
467	15.0	3.3	3.1	1490			**S301_3.1 P80 BXN80MB4**	588
587	11.9	2.2	2.4	1010	**SX201_2.4 SX20 MXN20B4**	585	**S201_2.4 P80 BXN80MB4**	586
591	11.9	4.2	2.4	1380			**S301_2.4 P80 BXN80MB4**	588
755	9.3	1.8	1.9	940	**SX201_1.9 SX20 MXN20B4**	585	**S201_1.9 P80 BXN80MB4**	586
763	9.2	1.1	1.9	460	**S101_1.9 SX20 MXN20B4**	583	**S101_1.9 P80 BXN80MB4**	584
783	8.9	3.4	1.8	1280			**S301_1.8 P80 BXN80MB4**	588
1006	7.0	1.4	1.4	440	**S101_1.4 SX20 MXN20B4**	583	**S101_1.4 P80 BXN80MB4**	584
1028	6.8	2.5	1.4	860	**SX201_1.4 SX20 MXN20B4**	585	**S201_1.4 P80 BXN80MB4**	586

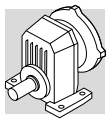

1.1 kW

n_2 min-1	M_2 Nm	S	i	R_{n2} N	IE2	IE3		IEC IE2	IEC IE3	
90	114	1.0	10.5	5650	**S501_10.5 S3 ME3LA6**		591	**S501_10.5 P100 BE100M6**		592
108	96	1.3	8.8	5380	**S501_8.8 S3 ME3LA6**		591	**S501_8.8 P100 BE100M6**		592
111	93	1.1	12.9	5320	**S501_12.9 S3 ME3SA4**	**S501_12.9 S3 MX3SA4**	591	**S501_12.9 P90 BE90S4**	**S501_12.9 P90 BX90S4**	592
128	81	1.7	7.4	5120	**S501_7.4 S3 ME3LA6**		591	**S501_7.4 P100 BE100M6**		592
132	78	1.2	7.2	3550	**S401_7.2 S3 ME3LA6**		589	**S401_7.2 P100 BE100M6**		590
137	76	1.5	10.5	5020	**S501_10.5 S3 ME3SA4**	**S501_10.5 S3 MX3SA4**	591	**S501_10.5 P90 BE90S4**	**S501_10.5 P90 BX90S4**	592
156	66	1.6	6.1	3400	**S401_6.1 S3 ME3LA6**		589	**S401_6.1 P100 BE100M6**		590
156	66	2.3	6.1	4840	**S501_6.1 S3 ME3LA6**		591	**S501_6.1 P100 BE100M6**		592
163	64	1.7	8.8	4770	**S501_8.8 S3 ME3SA4**	**S501_8.8 S3 MX3SA4**	591	**S501_8.8 P90 BE90S4**	**S501_8.8 P90 BX90S4**	592
166	63	1.0	8.6	3350	**S401_8.6 S3 ME3SA4**	**S401_8.6 S3 MX3SA4**	589	**S401_8.6 P90 BE90S4**	**S401_8.6 P90 BX90S4**	590
192	54	1.1	4.9	1740	**S301_4.9 S3 ME3LA6**		587	**S301_4.9 P100 BE100M6**		588
193	54	2.4	7.4	4530	**S501_7.4 S3 ME3SA4**	**S501_7.4 S3 MX3SA4**	591	**S501_7.4 P90 BE90S4**	**S501_7.4 P90 BX90S4**	592
196	53	2.0	4.8	3200	**S401_4.8 S3 ME3LA6**		589	**S401_4.8 P100 BE100M6**		590
200	52	1.5	7.2	3180	**S401_7.2 S3 ME3SA4**	**S401_7.2 S3 MX3SA4**	589	**S401_7.2 P90 BE90S4**	**S401_7.2 P90 BX90S4**	590
202	51	1.0	7.1	1730	**S301_7.1 S3 ME3SA4**	**S301_7.1 S3 MX3SA4**	587	**S301_7.1 P90 BE90S4**	**S301_7.1 P90 BX90S4**	588
220	47	1.7	12.9	4350	**S501_12.9 S2 ME2SB2**		591	**S501_12.9 P80 BE80B2**		592
236	44	2.0	6.1	3040	**S401_6.1 S3 ME3SA4**	**S401_6.1 S3 MX3SA4**	589	**S401_6.1 P90 BE90S4**	**S401_6.1 P90 BX90S4**	590
236	44	3.0	6.1	4270	**S501_6.1 S3 ME3SA4**	**S501_6.1 S3 MX3SA4**	591	**S501_6.1 P90 BE90S4**	**S501_6.1 P90 BX90S4**	592
240	43	1.3	3.9	1670	**S301_3.9 S3 ME3LA6**		587	**S301_3.9 P100 BE100M6**		588
245	42	1.2	5.8	1670	**S301_5.8 S3 ME3SA4**	**S301_5.8 S3 MX3SA4**	587	**S301_5.8 P90 BE90S4**	**S301_5.8 P90 BX90S4**	588
248	42	2.5	3.8	2990	**S401_3.8 S3 ME3LA6**		589	**S401_3.8 P100 BE100M6**		590
265	39	1.0	10.7	2930	**S401_10.7 S2 ME2SB2**		589	**S401_10.7 P80 BE80B2**		590
271	38	2.2	10.5	4090	**S501_10.5 S2 ME2SB2**		591	**S501_10.5 P80 BE80B2**		592
290	36	1.4	4.9	1610	**S301_4.9 S3 ME3SA4**	**S301_4.9 S3 MX3SA4**	587	**S301_4.9 P90 BE90S4**	**S301_4.9 P90 BX90S4**	588
296	35	2.6	4.8	2850	**S401_4.8 S3 ME3SA4**	**S401_4.8 S3 MX3SA4**	589	**S401_4.8 P90 BE90S4**	**S401_4.8 P90 BX90S4**	590
309	33	1.7	3.1	1580	**S301_3.1 S3 ME3LA6**		587	**S301_3.1 P100 BE100M6**		588
310	33	3.2	3.1	2810	**S401_3.1 S3 ME3LA6**		589	**S401_3.1 P100 BE100M6**		590
323	32	2.7	8.8	3870	**S501_8.8 S2 ME2SB2**		591	**S501_8.8 P80 BE80B2**		592
328	31	1.5	8.6	2760	**S401_8.6 S2 ME2SB2**		589	**S401_8.6 P80 BE80B2**		590
363	29	1.7	3.9	1530	**S301_3.9 S3 ME3SA4**	**S301_3.9 S3 MX3SA4**	587	**S301_3.9 P90 BE90S4**	**S301_3.9 P90 BX90S4**	588
364	29	0.9	3.9	950	**S201_3.9 S3 ME3SA4**	**S201_3.9 S3 MX3SA4**	585	**S201_3.9 P90 BE90S4**	**S201_3.9 P90 BX90S4**	586
375	28	3.3	3.8	2650	**S401_3.8 S3 ME3SA4**	**S401_3.8 S3 MX3SA4**	589	**S401_3.8 P90 BE90S4**	**S401_3.8 P90 BX90S4**	590
390	26	2.2	2.4	1490	**S301_2.4 S3 ME3LA6**		587	**S301_2.4 P100 BE100M6**		588
396	26	2.4	7.2	2610	**S401_7.2 S2 ME2SB2**		589	**S401_7.2 P80 BE80B2**		590
399	26	1.6	7.1	1500	**S301_7.1 S2 ME2SB2**		587	**S301_7.1 P80 BE80B2**		588
460	23	1.2	3.1	990	**S201_3.1 S3 ME3SA4**	**S201_3.1 S3 MX3SA4**	585	**S201_3.1 P90 BE90S4**	**S201_3.1 P90 BX90S4**	586
467	22	2.3	3.1	1430	**S301_3.1 S3 ME3SA4**	**S301_3.1 S3 MX3SA4**	587	**S301_3.1 P90 BE90S4**	**S301_3.1 P90 BX90S4**	588
484	21	1.9	5.8	1420	**S301_5.8 S2 ME2SB2**		587	**S301_5.8 P80 BE80B2**		588
499	21	1.0	1.9	960	**S201_1.9 S3 ME3LA6**		585	**S201_1.9 P100 BE100M6**		586
510	20	3.5	1.9	2420	**S401_1.9 S3 ME3LA6**		589	**S401_1.9 P100 BE100M6**		590
518	19.9	1.8	1.8	1380	**S301_1.8 S3 ME3LA6**		587	**S301_1.8 P100 BE100M6**		588
574	17.9	2.2	4.9	1360	**S301_4.9 S2 ME2SB2**		587	**S301_4.9 P80 BE80B2**		588
587	17.7	1.5	2.4	940	**S201_2.4 S3 ME3SA4**	**S201_2.4 S3 MX3SA4**	585	**S201_2.4 P90 BE90S4**	**S201_2.4 P90 BX90S4**	586
591	17.6	2.8	2.4	1340	**S301_2.4 S3 ME3SA4**	**S301_2.4 S3 MX3SA4**	587	**S301_2.4 P90 BE90S4**	**S301_2.4 P90 BX90S4**	588
593	17.3	1.2	4.8	950	**S201_4.8 S2 ME2SB2**		585	**S201_4.8 P80 BE80B2**		586

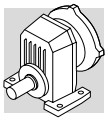

1.1 kW

n_2 min-1	M_2 Nm	S	i	R_{n2} N	IE2	IE3		IEC IE2	IEC IE3	
671	15.3	2.3	1.4	1290	**S301_1.4 S3 ME3LA6**		587	**S301_1.4 P100 BE100M6**		588
679	15.2	1.3	1.4	900	**S201_1.4 S3 ME3LA6**		585	**S201_1.4 P100 BE100M6**		586
717	14.3	2.8	3.9	1280	**S301_3.9 S2 ME2SB2**		587	**S301_3.9 P80 BE80B2**		588
719	14.3	1.5	3.9	910	**S201_3.9 S2 ME2SB2**		585	**S201_3.9 P80 BE80B2**		586
755	13.7	1.2	1.9	890	**S201_1.9 S3 ME3SA4**	**S201_1.9 S3 MX3SA4**	585	**S201_1.9 P90 BE90S4**	**S201_1.9 P90 BX90S4**	586
783	13.2	2.3	1.8	1240	**S301_1.8 S3 ME3SA4**	**S301_1.8 S3 MX3SA4**	587	**S301_1.8 P90 BE90S4**	**S301_1.8 P90 BX90S4**	588
910	11.3	1.9	3.1	860	**S201_3.1 S2 ME2SB2**		585	**S201_3.1 P80 BE80B2**		586
1006	10.3	1.0	1.4	390	**S101_1.4 S3 ME3SA4**	**S101_1.4 S3 MX3SA4**	583	**S101_1.4 P90 BE90S4**	**S101_1.4 P90 BX90S4**	584
1016	10.2	2.9	1.4	1150	**S301_1.4 S3 ME3SA4**	**S301_1.4 S3 MX3SA4**	587	**S301_1.4 P90 BE90S4**	**S301_1.4 P90 BX90S4**	588
1028	10.1	1.7	1.4	820	**S201_1.4 S3 ME3SA4**	**S201_1.4 S3 MX3SA4**	585	**S201_1.4 P90 BE90S4**	**S201_1.4 P90 BX90S4**	586
1161	8.9	2.4	2.4	810	**S201_2.4 S2 ME2SB2**		585	**S201_2.4 P80 BE80B2**		586
1494	6.9	1.9	1.9	750	**S201_1.9 S2 ME2SB2**		585	**S201_1.9 P80 BE80B2**		586
1509	6.8	1.2	1.9	380	**S101_1.9 S2 ME2SB2**		583	**S101_1.9 P80 BE80B2**		584
1991	5.2	1.5	1.4	350	**S101_1.4 S2 ME2SB2**		583	**S101_1.4 P80 BE80B2**		584
2034	5.1	2.6	1.4	690	**S201_1.4 S2 ME2SB2**		585	**S201_1.4 P80 BE80B2**		586

1.1 kW

n_2 min-1	M_2 Nm	S	i	R_{n2} N	IE3		IEC IE3	
111	93	1.1	12.9	5320			**S501_12.9 P90 BXN90S4**	592
137	76	1.5	10.5	5020			**S501_10.5 P90 BXN90S4**	592
163	64	1.7	8.8	4770			**S501_8.8 P90 BXN90S4**	592
166	63	1.0	8.6	3350			**S401_8.6 P90 BXN90S4**	590
193	54	2.4	7.4	4530			**S501_7.4 P90 BXN90S4**	592
200	52	1.5	7.2	3180			**S401_7.2 P90 BXN90S4**	590
202	51	1.0	7.1	1730			**S301_7.1 P90 BXN90S4**	588
236	44	2.0	6.1	3040			**S401_6.1 P90 BXN90S4**	590
236	44	3.0	6.1	4270			**S501_6.1 P90 BXN90S4**	592
245	42	1.2	5.8	1670			**S301_5.8 P90 BXN90S4**	588
290	36	1.4	4.9	1610			**S301_4.9 P90 BXN90S4**	588
296	35	2.6	4.8	2850			**S401_4.8 P90 BXN90S4**	590
363	29	1.7	3.9	1530			**S301_3.9 P90 BXN90S4**	588
364	29	0.9	3.9	950			**S201_3.9 P90 BXN90S4**	586
375	28	3.3	3.8	2650			**S401_3.8 P90 BXN90S4**	590
460	23	1.2	3.1	990			**S201_3.1 P90 BXN90S4**	586
467	22	2.3	3.1	1430			**S301_3.1 P90 BXN90S4**	588
587	17.7	1.5	2.4	940			**S201_2.4 P90 BXN90S4**	586
591	17.6	2.8	2.4	1340			**S301_2.4 P90 BXN90S4**	588
755	13.7	1.2	1.9	890			**S201_1.9 P90 BXN90S4**	586
783	13.2	2.3	1.8	1240			**S301_1.8 P90 BXN90S4**	588
1006	10.3	1.0	1.4	390			**S101_1.4 P90 BXN90S4**	584
1016	10.2	2.9	1.4	1150			**S301_1.4 P90 BXN90S4**	588
1028	10.1	1.7	1.4	820			**S201_1.4 P90 BXN90S4**	586

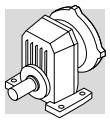

1.5 kW

n_2 min-1	M_2 Nm	S	i	R_{n2} N	IE2	IE3		IEC IE2	IEC IE3	
108	130	1.0	8.8	5190	**S501_8.8 S3 ME3LB6**		591	**S501_8.8 P100 BE100LA6**		592
128	110	1.3	7.4	4960	**S501_7.4 S3 ME3LB6**		591	**S501_7.4 P100 BE100LA6**		592
137	102	1.1	10.5	4880	**S501_10.5 S3 ME3SB4**	**S501_10.5 S3 MX3SB4**	591	**S501_10.5 P90 BE90LA4**	**S501_10.5 P90 BX90LA4**	592
156	90	1.7	6.1	4700	**S501_6.1 S3 ME3LB6**		591	**S501_6.1 P100 BE100LA6**		592
163	86	1.3	8.8	4660	**S501_8.8 S3 ME3SB4**	**S501_8.8 S3 MX3SB4**	591	**S501_8.8 P90 BE90LA4**	**S501_8.8 P90 BX90LA4**	592
193	73	1.8	7.4	4440	**S501_7.4 S3 ME3SB4**	**S501_7.4 S3 MX3SB4**	591	**S501_7.4 P90 BE90LA4**	**S501_7.4 P90 BX90LA4**	592
196	72	1.5	4.8	3070	**S401_4.8 S3 ME3LB6**		589	**S401_4.8 P100 BE100LA6**		590
199	71	2.5	4.8	4380	**S501_4.8 S3 ME3LB6**		591	**S501_4.8 P100 BE100LA6**		592
200	70	1.1	7.2	3070	**S401_7.2 S3 ME3SB4**	**S401_7.2 S3 MX3SB4**	589	**S401_7.2 P90 BE90LA4**	**S401_7.2 P90 BX90LA4**	590
222	63	1.3	12.9	4270	**S501_12.9 S3 ME3SA2**		591	**S501_12.9 P90 BE90SA2**		592
236	59	1.5	6.1	2940	**S401_6.1 S3 ME3SB4**	**S401_6.1 S3 MX3SB4**	589	**S401_6.1 P90 BE90LA4**	**S401_6.1 P90 BX90LA4**	590
236	59	2.2	6.1	4190	**S501_6.1 S3 ME3SB4**	**S501_6.1 S3 MX3SB4**	591	**S501_6.1 P90 BE90LA4**	**S501_6.1 P90 BX90LA4**	592
248	57	1.9	3.8	2880	**S401_3.8 S3 ME3LB6**		589	**S401_3.8 P100 BE100LA6**		590
273	51	1.7	10.5	4020	**S501_10.5 S3 ME3SA2**		591	**S501_10.5 P90 BE90SA2**		592
290	48	1.0	4.9	1500	**S301_4.9 S3 ME3SB4**	**S301_4.9 S3 MX3SB4**	587	**S301_4.9 P90 BE90LA4**	**S301_4.9 P90 BX90LA4**	588
296	47	1.9	4.8	2770	**S401_4.8 S3 ME3SB4**	**S401_4.8 S3 MX3SB4**	589	**S401_4.8 P90 BE90LA4**	**S401_4.8 P90 BX90LA4**	590
301	47	3.2	4.8	3890	**S501_4.8 S3 ME3SB4**	**S501_4.8 S3 MX3SB4**	591	**S501_4.8 P90 BE90LA4**	**S501_4.8 P90 BX90LA4**	592
309	45	1.3	3.1	1470	**S301_3.1 S3 ME3LB6**		587	**S301_3.1 P100 BE100LA6**		588
310	45	2.3	3.1	2720	**S401_3.1 S3 ME3LB6**		589	**S401_3.1 P100 BE100LA6**		590
326	43	2.0	8.8	3820	**S501_8.8 S3 ME3SA2**		591	**S501_8.8 P90 BE90SA2**		592
331	42	1.1	8.6	2700	**S401_8.6 S3 ME3SA2**		589	**S401_8.6 P90 BE90SA2**		590
363	39	1.3	3.9	1440	**S301_3.9 S3 ME3SB4**	**S301_3.9 S3 MX3SB4**	587	**S301_3.9 P90 BE90LA4**	**S301_3.9 P90 BX90LA4**	588
375	37	2.4	3.8	2590	**S401_3.8 S3 ME3SB4**	**S401_3.8 S3 MX3SB4**	589	**S401_3.8 P90 BE90LA4**	**S401_3.8 P90 BX90LA4**	590
386	36	2.7	7.4	3630	**S501_7.4 S3 ME3SA2**		591	**S501_7.4 P90 BE90SA2**		592
390	36	1.6	2.4	1400	**S301_2.4 S3 ME3LB6**		587	**S301_2.4 P100 BE100LA6**		588
395	36	3.0	2.4	2540	**S401_2.4 S3 ME3LB6**		589	**S401_2.4 P100 BE100LA6**		590
399	35	1.8	7.2	2560	**S401_7.2 S3 ME3SA2**		589	**S401_7.2 P90 BE90SA2**		590
403	35	1.1	7.1	1420	**S301_7.1 S3 ME3SA2**		587	**S301_7.1 P90 BE90SA2**		588
467	30	1.7	3.1	1360	**S301_3.1 S3 ME3SB4**	**S301_3.1 S3 MX3SB4**	587	**S301_3.1 P90 BE90LA4**	**S301_3.1 P90 BX90LA4**	588
468	30	3.0	3.1	2430	**S401_3.1 S3 ME3SB4**	**S401_3.1 S3 MX3SB4**	589	**S401_3.1 P90 BE90LA4**	**S401_3.1 P90 BX90LA4**	590
471	30	2.3	6.1	2440	**S401_6.1 S3 ME3SA2**		589	**S401_6.1 P90 BE90SA2**		590
488	29	1.4	5.8	1360	**S301_5.8 S3 ME3SA2**		587	**S301_5.8 P90 BE90SA2**		588
510	28	2.5	1.9	2350	**S401_1.9 S3 ME3LB6**		589	**S401_1.9 P100 BE100LA6**		590
518	27	1.3	1.8	1310	**S301_1.8 S3 ME3LB6**		587	**S301_1.8 P100 BE100LA6**		588
579	24	1.6	4.9	1310	**S301_4.9 S3 ME3SA2**		587	**S301_4.9 P90 BE90SA2**		588
587	24	1.1	2.4	870	**S201_2.4 S3 ME3SB4**	**S201_2.4 S3 MX3SB4**	585	**S201_2.4 P90 BE90LA4**	**S201_2.4 P90 BX90LA4**	586
591	24	2.1	2.4	1290	**S301_2.4 S3 ME3SB4**	**S301_2.4 S3 MX3SB4**	587	**S301_2.4 P90 BE90LA4**	**S301_2.4 P90 BX90LA4**	588
598	23	3.8	2.4	2200	**S401_2.4 S3 ME3SB4**	**S401_2.4 S3 MX3SB4**	589	**S401_2.4 P90 BE90LA4**	**S401_2.4 P90 BX90LA4**	590
671	21	1.7	1.4	1230	**S301_1.4 S3 ME3LB6**		587	**S301_1.4 P100 BE100LA6**		588
679	21	1.0	1.4	830	**S201_1.4 S3 ME3LB6**		585	**S201_1.4 P100 BE100LA6**		586
693	20	3.5	1.4	2150	**S401_1.4 S3 ME3LB6**		589	**S401_1.4 P100 BE100LA6**		590
724	19.4	2.1	3.9	1240	**S301_3.9 S3 ME3SA2**		587	**S301_3.9 P90 BE90SA2**		588
755	18.6	0.9	1.9	830	**S201_1.9 S3 ME3SB4**	**S201_1.9 S3 MX3SB4**	585	**S201_1.9 P90 BE90LA4**	**S201_1.9 P90 BX90LA4**	586
772	18.1	3.3	1.9	2090	**S401_1.9 S3 ME3SB4**	**S401_1.9 S3 MX3SB4**	589	**S401_1.9 P90 BE90LA4**	**S401_1.9 P90 BX90LA4**	590
783	17.9	1.7	1.8	1200	**S301_1.8 S3 ME3SB4**	**S301_1.8 S3 MX3SB4**	587	**S301_1.8 P90 BE90LA4**	**S301_1.8 P90 BX90LA4**	588
918	15.3	1.4	3.1	810	**S201_3.1 S3 ME3SA2**		585	**S201_3.1 P90 BE90SA2**		586

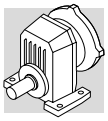

1.5 kW

n_2 min-1	M_2 Nm	S	i	R_{n2} N	IE2	IE3		IEC IE2	IEC IE3	
932	15.1	2.7	3.1	1160	**S301_3.1 S3 ME3SA2**		587	**S301_3.1 P90 BE90SA2**		588
1016	13.8	2.2	1.4	1110	**S301_1.4 S3 ME3SB4**	**S301_1.4 S3 MX3SB4**	587	**S301_1.4 P90 BE90LA4**	**S301_1.4 P90 BX90LA4**	588
1028	13.6	1.2	1.4	780	**S201_1.4 S3 ME3SB4**	**S201_1.4 S3 MX3SB4**	585	**S201_1.4 P90 BE90LA4**	**S201_1.4 P90 BX90LA4**	586
1171	12.0	1.8	2.4	770	**S201_2.4 S3 ME3SA2**		585	**S201_2.4 P90 BE90SA2**		586
1507	9.3	1.4	1.9	720	**S201_1.9 S3 ME3SA2**		585	**S201_1.9 P90 BE90SA2**		586
1563	9.0	2.7	1.8	1000	**S301_1.8 S3 ME3SA2**		587	**S301_1.8 P90 BE90SA2**		588
2009	7.0	1.1	1.4	320	**S101_1.4 S3 ME3SA2**		583	**S101_1.4 P90 BE90SA2**		584
2029	6.9	3.5	1.4	920	**S301_1.4 S3 ME3SA2**		587	**S301_1.4 P90 BE90SA2**		588
2052	6.8	1.9	1.4	670	**S201_1.4 S3 ME3SA2**		585	**S201_1.4 P90 BE90SA2**		586

1.5 kW

n_2 min-1	M_2 Nm	S	i	R_{n2} N	IE3		IEC IE3	
163	86	1.3	8.8	4660			**S501_8.8 P90 BXN90L4**	592
193	73	1.8	7.4	4440			**S501_7.4 P90 BXN90L4**	592
200	70	1.1	7.2	3070			**S401_7.2 P90 BXN90L4**	590
236	59	1.5	6.1	2940			**S401_6.1 P90 BXN90L4**	590
236	59	2.2	6.1	4190			**S501_6.1 P90 BXN90L4**	592
290	48	1.0	4.9	1500			**S301_4.9 P90 BXN90L4**	588
296	47	1.9	4.8	2770			**S401_4.8 P90 BXN90L4**	590
301	47	3.2	4.8	3890			**S501_4.8 P90 BXN90L4**	592
363	39	1.3	3.9	1440			**S301_3.9 P90 BXN90L4**	588
375	37	2.4	3.8	2590			**S401_3.8 P90 BXN90L4**	590
467	30	1.7	3.1	1360			**S301_3.1 P90 BXN90L4**	588
468	30	3.0	3.1	2430			**S401_3.1 P90 BXN90L4**	590
587	24	1.1	2.4	870			**S201_2.4 P90 BXN90L4**	586
591	24	2.1	2.4	1290			**S301_2.4 P90 BXN90L4**	588
598	23	3.8	2.4	2200			**S401_2.4 P90 BXN90L4**	590
755	18.6	0.9	1.9	830			**S201_1.9 P90 BXN90L4**	586
772	18.1	3.3	1.9	2090			**S401_1.9 P90 BXN90L4**	590
783	17.9	1.7	1.8	1200			**S301_1.8 P90 BXN90L4**	588
1016	13.8	2.2	1.4	1110			**S301_1.4 P90 BXN90L4**	588
1028	13.6	1.2	1.4	780			**S201_1.4 P90 BXN90L4**	586

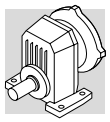

2.2 kW

n_2 min-1	M_2 Nm	S	i	R_{n2} N	IE2	IE3		IEC IE2	IEC IE3	
158	131	1.1	6.1	4520	**S501_6.1 S4 ME4SA6**		591	**S501_6.1 P112 BE112M6**		592
193	107	1.2	7.4	4280	**S501_7.4 S3 ME3LA4**	**S501_7.4 S3 MX3LA4**	591	**S501_7.4 P100 BE100LA4**	**S501_7.4 P100 BX100LA4**	592
201	102	1.7	4.8	4230	**S501_4.8 S4 ME4SA6**		591	**S501_4.8 P112 BE112M6**		592
236	87	1.0	6.1	2790	**S401_6.1 S3 ME3LA4**	**S401_6.1 S3 MX3LA4**	589	**S401_6.1 P100 BE100LA4**	**S401_6.1 P100 BX100LA4**	590
236	87	1.5	6.1	4060	**S501_6.1 S3 ME3LA4**	**S501_6.1 S3 MX3LA4**	591	**S501_6.1 P100 BE100LA4**	**S501_6.1 P100 BX100LA4**	592
249	83	2.1	3.8	4000	**S501_3.8 S4 ME4SA6**		591	**S501_3.8 P112 BE112M6**		592
250	82	1.3	3.8	2730	**S401_3.8 S4 ME4SA6**		589	**S401_3.8 P112 BE112M6**		590
274	75	1.1	10.5	3910	**S501_10.5 S3 ME3LA2**		591	**S501_10.5 P90 BE90L2**		592
296	70	1.3	4.8	2640	**S401_4.8 S3 ME3LA4**	**S401_4.8 S3 MX3LA4**	589	**S401_4.8 P100 BE100LA4**	**S401_4.8 P100 BX100LA4**	590
301	68	2.2	4.8	3790	**S501_4.8 S3 ME3LA4**	**S501_4.8 S3 MX3LA4**	591	**S501_4.8 P100 BE100LA4**	**S501_4.8 P100 BX100LA4**	592
313	66	1.6	3.1	2590	**S401_3.1 S4 ME4SA6**		589	**S401_3.1 P112 BE112M6**		590
314	66	2.4	3.0	3750	**S501_3.0 S4 ME4SA6**		591	**S501_3.0 P112 BE112M6**		592
327	63	1.3	8.8	3730	**S501_8.8 S3 ME3LA2**		591	**S501_8.8 P90 BE90L2**		592
372	55	2.7	3.8	3570	**S501_3.8 S3 ME3LA4**	**S501_3.8 S3 MX3LA4**	591	**S501_3.8 P100 BE100LA4**	**S501_3.8 P100 BX100LA4**	592
375	55	1.6	3.8	2490	**S401_3.8 S3 ME3LA4**	**S401_3.8 S3 MX3LA4**	589	**S401_3.8 P100 BE100LA4**	**S401_3.8 P100 BX100LA4**	590
387	53	1.9	7.4	3540	**S501_7.4 S3 ME3LA2**		591	**S501_7.4 P90 BE90L2**		592
394	52	1.1	2.4	1260	**S301_2.4 S4 ME4SA6**		587	**S301_2.4 P112 BE112M6**		588
399	52	2.0	2.4	2450	**S401_2.4 S4 ME4SA6**		589	**S401_2.4 P112 BE112M6**		590
400	51	1.2	7.2	2460	**S401_7.2 S3 ME3LA2**		589	**S401_7.2 P90 BE90L2**		590
467	44	1.1	3.1	1240	**S301_3.1 S3 ME3LA4**	**S301_3.1 S3 MX3LA4**	587	**S301_3.1 P100 BE100LA4**	**S301_3.1 P100 BX100LA4**	588
468	44	2.0	3.1	2340	**S401_3.1 S3 ME3LA4**	**S401_3.1 S3 MX3LA4**	589	**S401_3.1 P100 BE100LA4**	**S401_3.1 P100 BX100LA4**	590
470	44	3.2	3.0	3340	**S501_3.0 S3 ME3LA4**	**S501_3.0 S3 MX3LA4**	591	**S501_3.0 P100 BE100LA4**	**S501_3.0 P100 BX100LA4**	592
472	44	1.6	6.1	2360	**S401_6.1 S3 ME3LA2**		589	**S401_6.1 P90 BE90L2**		590
473	44	2.3	6.1	3340	**S501_6.1 S3 ME3LA2**		591	**S501_6.1 P90 BE90L2**		592
490	42	1.0	5.8	1250	**S301_5.8 S3 ME3LA2**		587	**S301_5.8 P90 BE90L2**		588
516	40	1.8	1.9	2280	**S401_1.9 S4 ME4SA6**		589	**S401_1.9 P112 BE112M6**		590
534	39	3.2	1.8	3210	**S501_1.8 S4 ME4SA6**		591	**S501_1.8 P112 BE112M6**		592
581	35	1.1	4.9	1220	**S301_4.9 S3 ME3LA2**		587	**S301_4.9 P90 BE90L2**		588
591	35	1.4	2.4	1190	**S301_2.4 S3 ME3LA4**	**S301_2.4 S3 MX3LA4**	587	**S301_2.4 P100 BE100LA4**	**S301_2.4 P100 BX100LA4**	588
593	35	2.0	4.8	2210	**S401_4.8 S3 ME3LA2**		589	**S401_4.8 P90 BE90L2**		590
598	34	2.6	2.4	2200	**S401_2.4 S3 ME3LA4**	**S401_2.4 S3 MX3LA4**	589	**S401_2.4 P100 BE100LA4**	**S401_2.4 P100 BX100LA4**	590
679	30	1.2	1.4	1140	**S301_1.4 S4 ME4SA6**		587	**S301_1.4 P112 BE112M6**		588
700	29	2.4	1.4	2090	**S401_1.4 S4 ME4SA6**		589	**S401_1.4 P112 BE112M6**		590
726	28	1.4	3.9	1160	**S301_3.9 S3 ME3LA2**		587	**S301_3.9 P90 BE90L2**		588
751	27	2.6	3.8	2070	**S401_3.8 S3 ME3LA2**		589	**S401_3.8 P90 BE90L2**		590
772	27	2.2	1.9	2040	**S401_1.9 S3 ME3LA4**	**S401_1.9 S3 MX3LA4**	589	**S401_1.9 P100 BE100LA4**	**S401_1.9 P100 BX100LA4**	590
783	26	1.1	1.8	1120	**S301_1.8 S3 ME3LA4**	**S301_1.8 S3 MX3LA4**	587	**S301_1.8 P100 BE100LA4**	**S301_1.8 P100 BX100LA4**	588
921	22	0.9	3.1	730	**S201_3.1 S3 ME3LA2**		585	**S201_3.1 P90 BE90L2**		586
936	22	1.8	3.1	1100	**S301_3.1 S3 ME3LA2**		587	**S301_3.1 P90 BE90L2**		588
1016	20	1.5	1.4	1050	**S301_1.4 S3 ME3LA4**	**S301_1.4 S3 MX3LA4**	587	**S301_1.4 P100 BE100LA4**	**S301_1.4 P100 BX100LA4**	588
1049	19.6	3.1	1.4	1860	**S401_1.4 S3 ME3LA4**	**S401_1.4 S3 MX3LA4**	589	**S401_1.4 P100 BE100LA4**	**S401_1.4 P100 BX100LA4**	590
1175	17.5	1.2	2.4	710	**S201_2.4 S3 ME3LA2**		585	**S201_2.4 P90 BE90L2**		586
1183	17.4	2.3	2.4	1030	**S301_2.4 S3 ME3LA2**		587	**S301_2.4 P90 BE90L2**		588
1512	13.6	1.0	1.9	670	**S201_1.9 S3 ME3LA2**		585	**S201_1.9 P90 BE90L2**		586
1569	13.1	1.8	1.8	960	**S301_1.8 S3 ME3LA2**		587	**S301_1.8 P90 BE90L2**		588

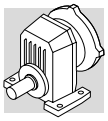

2.2 kW

n_2 min-1	M_2 Nm	S	i	R_{n2} N	IE2	IE3		IEC IE2	IEC IE3	
2036	10.1	2.4	1.4	890	**S301_1.4 S3 ME3LA2**		587	**S301_1.4 P90 BE90L2**		588
2059	10.0	1.3	1.4	630	**S201_1.4 S3 ME3LA2**		585	**S201_1.4 P90 BE90L2**		586

2.2 kW

n_2 min-1	M_2 Nm	S	i	R_{n2} N	IE3		IEC IE3	
193	107	1.2	7.4	4280			**S501_7.4 P100 BXN100LA4**	592
236	87	1.0	6.1	2790			**S401_6.1 P100 BXN100LA4**	590
236	87	1.5	6.1	4060			**S501_6.1 P100 BXN100LA4**	592
296	70	1.3	4.8	2640			**S401_4.8 P100 BXN100LA4**	590
301	68	2.2	4.8	3790			**S501_4.8 P100 BXN100LA4**	592
372	55	2.7	3.8	3570			**S501_3.8 P100 BXN100LA4**	592
375	55	1.6	3.8	2490			**S401_3.8 P100 BXN100LA4**	590
467	44	1.1	3.1	1240			**S301_3.1 P100 BXN100LA4**	588
468	44	2.0	3.1	2340			**S401_3.1 P100 BXN100LA4**	590
470	44	3.2	3.0	3340			**S501_3.0 P100 BXN100LA4**	592
591	35	1.4	2.4	1190			**S301_2.4 P100 BXN100LA4**	588
598	34	2.6	2.4	2200			**S401_2.4 P100 BXN100LA4**	590
772	27	2.2	1.9	2040			**S401_1.9 P100 BXN100LA4**	590
783	26	1.1	1.8	1120			**S301_1.8 P100 BXN100LA4**	588
1016	20	1.5	1.4	1050			**S301_1.4 P100 BXN100LA4**	588
1049	19.6	3.1	1.4	1860			**S401_1.4 P100 BXN100LA4**	590

3 kW

n_2 min-1	M_2 Nm	S	i	R_{n2} N	IE2	IE3		IEC IE2	IEC IE3	
201	140	1.3	4.8	4040	**S501_4.8 S4 ME4SB6**		591	**S501_4.8 P132 BE132S6**		592
238	119	1.1	6.1	3910	**S501_6.1 S3 ME3LB4**	**S501_6.1 S3 MX3LB4**	591	**S501_6.1 P100 BE100LB4**	**S501_6.1 P100 BX100LB4**	592
249	113	1.5	3.8	3840	**S501_3.8 S4 ME4SB6**		591	**S501_3.8 P132 BE132S6**		592
298	95	1.0	4.8	2490	**S401_4.8 S3 ME3LB4**	**S401_4.8 S3 MX3LB4**	589	**S401_4.8 P100 BE100LB4**	**S401_4.8 P100 BX100LB4**	590
303	93	1.6	4.8	3670	**S501_4.8 S3 ME3LB4**	**S501_4.8 S3 MX3LB4**	591	**S501_4.8 P100 BE100LB4**	**S501_4.8 P100 BX100LB4**	592
313	90	1.2	3.1	2440	**S401_3.1 S4 ME4SB6**		589	**S401_3.1 P132 BE132S6**		590
314	89	1.8	3.0	3630	**S501_3.0 S4 ME4SB6**		591	**S501_3.0 P132 BE132S6**		592
328	85	1.0	8.8	3600	**S501_8.8 S3 ME3LB2**		591	**S501_8.8 P100 BE100L2**		592
375	75	2.0	3.8	3470	**S501_3.8 S3 ME3LB4**	**S501_3.8 S3 MX3LB4**	591	**S501_3.8 P100 BE100LB4**	**S501_3.8 P100 BX100LB4**	592
378	75	1.2	3.8	2370	**S401_3.8 S3 ME3LB4**	**S401_3.8 S3 MX3LB4**	589	**S401_3.8 P100 BE100LB4**	**S401_3.8 P100 BX100LB4**	590

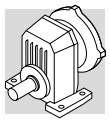

3 kW

n_2 min-1	M_2 Nm	S	i	R_{n2} N	IE2	IE3		IEC IE2	IEC IE3	
389	72	1.4	7.4	3440	**S501_7.4 S3 ME3LB2**		591	**S501_7.4 P100 BE100L2**		592
397	71	2.1	2.4	3390	**S501_2.4 S4 ME4SB6**		591	**S501_2.4 P132 BE132S6**		592
399	70	1.5	2.4	2320	**S401_2.4 S4 ME4SB6**		589	**S401_2.4 P132 BE132S6**		590
472	60	1.5	3.1	2250	**S401_3.1 S3 ME3LB4**	**S401_3.1 S3 MX3LB4**	589	**S401_3.1 P100 BE100LB4**	**S401_3.1 P100 BX100LB4**	590
473	60	2.3	3.0	3260	**S501_3.0 S3 ME3LB4**	**S501_3.0 S3 MX3LB4**	591	**S501_3.0 P100 BE100LB4**	**S501_3.0 P100 BX100LB4**	592
516	54	1.3	1.9	2170	**S401_1.9 S4 ME4SB6**		589	**S401_1.9 P132 BE132S6**		590
534	53	2.4	1.8	3120	**S501_1.8 S4 ME4SB6**		591	**S501_1.8 P132 BE132S6**		592
595	47	1.1	2.4	1080	**S301_2.4 S3 ME3LB4**	**S301_2.4 S3 MX3LB4**	587	**S301_2.4 P100 BE100LB4**	**S301_2.4 P100 BX100LB4**	588
596	47	1.5	4.8	2130	**S401_4.8 S3 ME3LB2**		589	**S401_4.8 P100 BE100L2**		590
598	47	2.8	2.4	3040	**S501_2.4 S3 ME3LB4**	**S501_2.4 S3 MX3LB4**	591	**S501_2.4 P100 BE100LB4**	**S501_2.4 P100 BX100LB4**	592
602	47	1.9	2.4	2120	**S401_2.4 S3 ME3LB4**	**S401_2.4 S3 MX3LB4**	589	**S401_2.4 P100 BE100LB4**	**S401_2.4 P100 BX100LB4**	590
606	46	2.6	4.8	3030	**S501_4.8 S3 ME3LB2**		591	**S501_4.8 P100 BE100L2**		592
672	42	3.0	1.4	2920	**S501_1.4 S4 ME4SB6**		591	**S501_1.4 P132 BE132S6**		592
700	40	1.7	1.4	2010	**S401_1.4 S4 ME4SB6**		589	**S401_1.4 P132 BE132S6**		590
730	38	1.0	3.9	1070	**S301_3.9 S3 ME3LB2**		587	**S301_3.9 P100 BE100L2**		588
755	37	1.9	3.8	2000	**S401_3.8 S3 ME3LB2**		589	**S401_3.8 P100 BE100L2**		590
778	36	1.7	1.9	1970	**S401_1.9 S3 ME3LB4**	**S401_1.9 S3 MX3LB4**	589	**S401_1.9 P100 BE100LB4**	**S401_1.9 P100 BX100LB4**	590
789	36	0.8	1.8	900	**S301_1.8 S3 ME3LB4**	**S301_1.8 S3 MX3LB4**	587	**S301_1.8 P100 BE100LB4**	**S301_1.8 P100 BX100LB4**	588
805	35	3.1	1.8	2780	**S501_1.8 S3 ME3LB4**	**S501_1.8 S3 MX3LB4**	591	**S501_1.8 P100 BE100LB4**	**S501_1.8 P100 BX100LB4**	592
940	30	1.3	3.1	1020	**S301_3.1 S3 ME3LB2**		587	**S301_3.1 P100 BE100L2**		588
943	30	2.4	3.1	1880	**S401_3.1 S3 ME3LB2**		589	**S401_3.1 P100 BE100L2**		590
1023	28	1.1	1.4	980	**S301_1.4 S3 ME3LB4**	**S301_1.4 S3 MX3LB4**	587	**S301_1.4 P100 BE100LB4**	**S301_1.4 P100 BX100LB4**	588
1056	27	2.2	1.4	1820	**S401_1.4 S3 ME3LB4**	**S401_1.4 S3 MX3LB4**	589	**S401_1.4 P100 BE100LB4**	**S401_1.4 P100 BX100LB4**	590
1190	24	1.7	2.4	980	**S301_2.4 S3 ME3LB2**		587	**S301_2.4 P100 BE100L2**		588
1204	23	3.0	2.4	1760	**S401_2.4 S3 ME3LB2**		589	**S401_2.4 P100 BE100L2**		590
1555	18.1	2.7	1.9	1630	**S401_1.9 S3 ME3LB2**		589	**S401_1.9 P100 BE100L2**		590
1577	17.8	1.3	1.8	910	**S301_1.8 S3 ME3LB2**		587	**S301_1.8 P100 BE100L2**		588
2046	13.7	1.7	1.4	850	**S301_1.4 S3 ME3LB2**		587	**S301_1.4 P100 BE100L2**		588
2070	13.6	1.0	1.4	580	**S201_1.4 S3 ME3LB2**		585	**S201_1.4 P100 BE100L2**		586

3 kW

n_2 min-1	M_2 Nm	S	i	R_{n2} N	IE3		IEC IE3	
238	119	1.1	6.1	3910			**S501_6.1 P100 BXN100LB4**	592
298	95	1.0	4.8	2490			**S401_4.8 P100 BXN100LB4**	590
303	93	1.6	4.8	3670			**S501_4.8 P100 BXN100LB4**	592
375	75	2.0	3.8	3470			**S501_3.8 P100 BXN100LB4**	592
378	75	1.2	3.8	2370			**S401_3.8 P100 BXN100LB4**	590
472	60	1.5	3.1	2250			**S401_3.1 P100 BXN100LB4**	590
473	60	2.3	3.0	3260			**S501_3.0 P100 BXN100LB4**	592

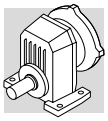

3 kW

n_2 min-1	M_2 Nm	S	i	R_{n2} N	IE3		IEC IE3	
595	47	1.1	2.4	1080			**S301_2.4 P100 BXN100LB4**	588
598	47	2.8	2.4	3040			**S501_2.4 P100 BXN100LB4**	592
602	47	1.9	2.4	2120			**S401_2.4 P100 BXN100LB4**	590
778	36	1.7	1.9	1970			**S401_1.9 P100 BXN100LB4**	590
789	36	0.8	1.8	900			**S301_1.8 P100 BXN100LB4**	588
805	35	3.1	1.8	2780			**S501_1.8 P100 BXN100LB4**	592
1023	28	1.1	1.4	980			**S301_1.4 P100 BXN100LB4**	588
1056	27	2.2	1.4	1820			**S401_1.4 P100 BXN100LB4**	590

4 kW

n_2 min-1	M_2 Nm	S	i	R_{n2} N	IE2	IE3		IEC IE2	IE3	
203	184	0.9	4.8	3810	**S501_4.8 S4 ME4LA6**		591	**S501_4.8 P132 BE132MA6**		592
251	149	1.2	3.8	3650	**S501_3.8 S4 ME4LA6**		591	**S501_3.8 P132 BE132MA6**		592
303	126	1.2	4.8	3530	**S501_4.8 S4 ME4SA4**	**S501_4.8 S4 MX4SA4**	591	**S501_4.8 P112 BE112M4**	**S501_4.8 P112 BX112M4**	592
317	118	1.4	3.0	3470	**S501_3.0 S4 ME4LA6**		591	**S501_3.0 P132 BE132MA6**		592
375	102	1.5	3.8	3360	**S501_3.8 S4 ME4SA4**	**S501_3.8 S4 MX4SA4**	591	**S501_3.8 P112 BE112M4**	**S501_3.8 P112 BX112M4**	592
392	96	1.0	7.4	3320	**S501_7.4 S4 ME4SA2**		591	**S501_7.4 P112 BE112M2**		592
401	93	1.6	2.4	3270	**S501_2.4 S4 ME4LA6**		591	**S501_2.4 P132 BE132MA6**		592
472	81	1.1	3.1	2130	**S401_3.1 S4 ME4SA4**	**S401_3.1 S4 MX4SA4**	589	**S401_3.1 P112 BE112M4**	**S401_3.1 P112 BX112M4**	590
473	81	1.7	3.0	3170	**S501_3.0 S4 ME4SA4**	**S501_3.0 S4 MX4SA4**	591	**S501_3.0 P112 BE112M4**	**S501_3.0 P112 BX112M4**	592
479	78	1.3	6.1	3160	**S501_6.1 S4 ME4SA2**		591	**S501_6.1 P112 BE112M2**		592
521	72	1.0	1.9	2050	**S401_1.9 S4 ME4LA6**		589	**S401_1.9 P132 BE132MA6**		590
540	69	1.8	1.8	3020	**S501_1.8 S4 ME4LA6**		591	**S501_1.8 P132 BE132MA6**		592
598	64	2.0	2.4	2970	**S501_2.4 S4 ME4SA4**	**S501_2.4 S4 MX4SA4**	591	**S501_2.4 P112 BE112M4**	**S501_2.4 P112 BX112M4**	592
602	63	1.4	2.4	2030	**S401_2.4 S4 ME4SA4**	**S401_2.4 S4 MX4SA4**	589	**S401_2.4 P112 BE112M4**	**S401_2.4 P112 BX112M4**	590
611	61	2.0	4.8	2960	**S501_4.8 S4 ME4SA2**		591	**S501_4.8 P112 BE112M2**		592
679	55	2.3	1.4	2830	**S501_1.4 S4 ME4LA6**		591	**S501_1.4 P132 BE132MA6**		592
708	53	1.3	1.4	1920	**S401_1.4 S4 ME4LA6**		589	**S401_1.4 P132 BE132MA6**		590
755	50	2.4	3.8	2790	**S501_3.8 S4 ME4SA2**		591	**S501_3.8 P112 BE112M2**		592
761	49	1.4	3.8	1930	**S401_3.8 S4 ME4SA2**		589	**S401_3.8 P112 BE112M2**		590
778	49	1.2	1.9	1900	**S401_1.9 S4 ME4SA4**	**S401_1.9 S4 MX4SA4**	589	**S401_1.9 P112 BE112M4**	**S401_1.9 P112 BX112M4**	590
805	47	2.3	1.8	2730	**S501_1.8 S4 ME4SA4**	**S501_1.8 S4 MX4SA4**	591	**S501_1.8 P112 BE112M4**	**S501_1.8 P112 BX112M4**	592
953	39	2.8	3.0	2610	**S501_3.0 S4 ME4SA2**		591	**S501_3.0 P112 BE112M2**		592
950	39	1.8	3.1	1820	**S401_3.1 S4 ME4SA2**		589	**S401_3.1 P112 BE112M2**		590
1013	38	2.9	1.4	2560	**S501_1.4 S4 ME4SA4**	**S501_1.4 S4 MX4SA4**	591	**S501_1.4 P112 BE112M4**	**S501_1.4 P112 BX112M4**	592
1056	36	1.7	1.4	1760	**S401_1.4 S4 ME4SA4**	**S401_1.4 S4 MX4SA4**	589	**S401_1.4 P112 BE112M4**	**S401_1.4 P112 BX112M4**	590
1198	31	1.3	2.4	910	**S301_2.4 S4 ME4SA2**		587	**S301_2.4 P112 BE112M2**		588

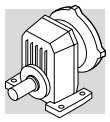

4 kW

n_2 min-1	M_2 Nm	S	i	R_{n2} N	IE2	IE3		IEC IE2	IEC IE3	
1213	31	2.3	2.4	1710	**S401_2.4 S4 ME4SA2**		589	**S401_2.4 P112 BE112M2**		590
1566	24	2.0	1.9	1590	**S401_1.9 S4 ME4SA2**		589	**S401_1.9 P112 BE112M2**		590
1588	24	1.0	1.8	860	**S301_1.8 S4 ME4SA2**		587	**S301_1.8 P112 BE112M2**		588
2061	18.2	1.3	1.4	810	**S301_1.4 S4 ME4SA2**		587	**S301_1.4 P112 BE112M2**		588
2127	17.6	2.7	1.4	1460	**S401_1.4 S4 ME4SA2**		589	**S401_1.4 P112 BE112M2**		590

4 kW

n_2 min-1	M_2 Nm	S	i	R_{n2} N	IE3		IEC IE3	
303	126	1.2	4.8	3530			**S501_4.8 P112 BXN112M4**	592
375	102	1.5	3.8	3360			**S501_3.8 P112 BXN112M4**	592
472	81	1.1	3.1	2130			**S401_3.1 P112 BXN112M4**	590
473	81	1.7	3.0	3170			**S501_3.0 P112 BXN112M4**	592
598	64	2.0	2.4	2970			**S501_2.4 P112 BXN112M4**	592
602	63	1.4	2.4	2030			**S401_2.4 P112 BXN112M4**	590
778	49	1.2	1.9	1900			**S401_1.9 P112 BXN112M4**	590
805	47	2.3	1.8	2730			**S501_1.8 P112 BXN112M4**	592
1013	38	2.9	1.4	2560			**S501_1.4 P112 BXN112M4**	592
1056	36	1.7	1.4	1760			**S401_1.4 P112 BXN112M4**	590

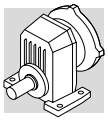

5.5 kW

n_2 min-1	M_2 Nm	S	i	R_{n2} N	IE2	IE3		IEC IE2	IEC IE3	
317	162	1.0	3.0	3260	**S501_3.0 S5 ME5SA6**		591	**S501_3.0 P160 BE160MA6**		592
380	136	1.1	3.8	3150	**S501_3.8 S4 ME4SB4**	**S501_3.8 S4 MX4SB4**	591	**S501_3.8 P132 BE132S4**	**S501_3.8 P132 BX132SB4**	592
401	128	1.2	2.4	3090	**S501_2.4 S5 ME5SA6**		591	**S501_2.4 P160 BE160MA6**		592
480	107	1.3	3.0	3000	**S501_3.0 S4 ME4SB4**	**S501_3.0 S4 MX4SB4**	591	**S501_3.0 P132 BE132S4**	**S501_3.0 P132 BX132SB4**	592
540	95	1.3	1.8	2880	**S501_1.8 S5 ME5SA6**		591	**S501_1.8 P160 BE160MA6**		592
606	85	1.5	2.4	2830	**S501_2.4 S4 ME4SB4**	**S501_2.4 S4 MX4SB4**	591	**S501_2.4 P132 BE132S4**	**S501_2.4 P132 BX132SB4**	592
611	84	1.1	2.4	1870	**S401_2.4 S4 ME4SB4**	**S401_2.4 S4 MX4SB4**	589	**S401_2.4 P132 BE132S4**	**S401_2.4 P132 BX132SB4**	590
616	84	1.4	4.8	2840	**S501_4.8 S4 ME4SB2**		591	**S501_4.8 P132 BE132SA2**		592
679	76	1.6	1.4	2720	**S501_1.4 S5 ME5SA6**		591	**S501_1.4 P160 BE160MA6**		592
708	73	1.0	1.4	1780				**S401_1.4 P160 BE160MA6**		590
761	68	1.8	3.8	2690	**S501_3.8 S4 ME4SB2**		591	**S501_3.8 P132 BE132SA2**		592
767	67	1.0	3.8	1810	**S401_3.8 S4 ME4SB2**		589	**S401_3.8 P132 BE132SA2**		590
788	65	0.9	1.9	1770	**S401_1.9 S4 ME4SB4**	**S401_1.9 S4 MX4SB4**	589	**S401_1.9 P132 BE132S4**	**S401_1.9 P132 BX132SB4**	590
817	63	1.7	1.8	2610	**S501_1.8 S4 ME4SB4**	**S501_1.8 S4 MX4SB4**	591	**S501_1.8 P132 BE132S4**	**S501_1.8 P132 BX132SB4**	592
958	54	1.3	3.1	1730	**S401_3.1 S4 ME4SB2**		589	**S401_3.1 P132 BE132SA2**		590
961	54	2.1	3.0	2530	**S501_3.0 S4 ME4SB2**		591	**S501_3.0 P132 BE132SA2**		592
1027	50	2.2	1.4	2450	**S501_1.4 S4 ME4SB4**	**S501_1.4 S4 MX4SB4**	591	**S501_1.4 P132 BE132S4**	**S501_1.4 P132 BX132SB4**	592
1071	48	1.2	1.4	1660	**S401_1.4 S4 ME4SB4**	**S401_1.4 S4 MX4SB4**	589	**S401_1.4 P132 BE132S4**	**S401_1.4 P132 BX132SB4**	590
1215	42	2.4	2.4	2370	**S501_2.4 S4 ME4SB2**		591	**S501_2.4 P132 BE132SA2**		592
1223	42	1.7	2.4	1640	**S401_2.4 S4 ME4SB2**		589	**S401_2.4 P132 BE132SA2**		590
1580	33	1.5	1.9	1530	**S401_1.9 S4 ME4SB2**		589	**S401_1.9 P132 BE132SA2**		590
1636	31	2.7	1.8	2170	**S501_1.8 S4 ME4SB2**		591	**S501_1.8 P132 BE132SA2**		592
2058	25	3.4	1.4	2030	**S501_1.4 S4 ME4SB2**		591	**S501_1.4 P132 BE132SA2**		592
2145	24	2.0	1.4	1410	**S401_1.4 S4 ME4SB2**		589	**S401_1.4 P132 BE132SA2**		590

5.5 kW

n_2 min-1	M_2 Nm	S	i	R_{n2} N	IE3		IEC IE3	
380	136	1.1	3.8	3150			**S501_3.8 P132 BXN132S4**	592
480	107	1.3	3.0	3000			**S501_3.0 P132 BXN132S4**	592
606	85	1.5	2.4	2830			**S501_2.4 P132 BXN132S4**	592
611	84	1.1	2.4	1870			**S401_2.4 P132 BXN132S4**	590
788	65	0.9	1.9	1770			**S401_1.9 P132 BXN132S4**	590
817	63	1.7	1.8	2610			**S501_1.8 P132 BXN132S4**	592
1027	50	2.2	1.4	2450			**S501_1.4 P132 BXN132S4**	592
1071	48	1.2	1.4	1660			**S401_1.4 P132 BXN132S4**	590

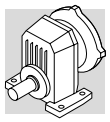

7.5 kW

n_2 min-1	M_2 Nm	S	i	R_{n2} N	IE2	IE3		IEC IE2	IEC IE3	
478	146	1.0	3.0	2810	**S501_3.0 S4 ME4LA4**	**S501_3.0 S4 MX4LA4**	591	**S501_3.0 P132 BE132MA4**	**S501_3.0 P132 BX132MA4**	592
540	130	1.0	1.8	2690	**S501_1.8 S5 ME5SB6**		591	**S501_1.8 P160 BE160MB6**		592
604	116	1.1	2.4	2670	**S501_2.4 S4 ME4LA4**	**S501_2.4 S4 MX4LA4**	591	**S501_2.4 P132 BE132MA4**	**S501_2.4 P132 BX132MA4**	592
679	103	1.2	1.4	2560	**S501_1.4 S5 ME5SB6**		591	**S501_1.4 P160 BE160MB6**		592
761	92	1.3	3.8	2570	**S501_3.8 S4 ME4LA2**		591	**S501_3.8 P132 BE132SB2**		592
814	86	1.3	1.8	2490	**S501_1.8 S4 ME4LA4**	**S501_1.8 S4 MX4LA4**	591	**S501_1.8 P132 BE132MA4**	**S501_1.8 P132 BX132MA4**	592
958	73	1.0	3.1	1610	**S401_3.1 S4 ME4LA2**		589	**S401_3.1 P132 BE132SB2**		590
961	73	1.5	3.0	2440	**S501_3.0 S4 ME4LA2**		591	**S501_3.0 P132 BE132SB2**		592
1024	68	1.6	1.4	2350	**S501_1.4 S4 ME4LA4**	**S501_1.4 S4 MX4LA4**	591	**S501_1.4 P132 BE132MA4**	**S501_1.4 P132 BX132MA4**	592
1067	65	0.9	1.4	1540	**S401_1.4 S4 ME4LA4**	**S401_1.4 S4 MX4LA4**	589	**S401_1.4 P132 BE132MA4**	**S401_1.4 P132 BX132MA4**	590
1215	58	1.7	2.4	2290	**S501_2.4 S4 ME4LA2**		591	**S501_2.4 P132 BE132SB2**		592
1223	57	1.2	2.4	1540	**S401_2.4 S4 ME4LA2**		589	**S401_2.4 P132 BE132SB2**		590
1580	44	1.1	1.9	1450	**S401_1.9 S4 ME4LA2**		589	**S401_1.9 P132 BE132SB2**		590
1636	43	2.0	1.8	2110	**S501_1.8 S4 ME4LA2**		591	**S501_1.8 P132 BE132SB2**		592
2058	34	2.5	1.4	1980	**S501_1.4 S4 ME4LA2**		591	**S501_1.4 P132 BE132SB2**		592
2145	33	1.5	1.4	1350	**S401_1.4 S4 ME4LA2**		589	**S401_1.4 P132 BE132SB2**		590

7.5 kW

n_2 min-1	M_2 Nm	S	i	R_{n2} N	IE3		IEC IE3	
478	146	1.0	3.0	2810			**S501_3.0 P132 BXN132M4**	592
604	116	1.1	2.4	2670			**S501_2.4 P132 BXN132M4**	592
814	86	1.3	1.8	2490			**S501_1.8 P132 BXN132M4**	592
1024	68	1.6	1.4	2350			**S501_1.4 P132 BXN132M4**	592
1067	65	0.9	1.4	1540			**S401_1.4 P132 BXN132M4**	590

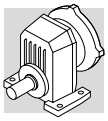

9.2 kW

n_2 min-1	M_2 Nm	S	i	R_{n2} N	IE2	IE3		IEC IE2	IEC IE3	
602	144	0.9	2.4	2530	**S501_2.4 S4 ME4LB4**	**S501_2.4 S5 MX5SA4**	591	**S501_2.4 P132 BE132MB4**	**S501_2.4 P160 BX160MA4**	592
760	113	1.1	3.8	2470	**S501_3.8 S4 ME4LB2**		591	**S501_3.8 P132 BE132MB2**		592
811	107	1.0	1.8	2390	**S501_1.8 S4 ME4LB4**	**S501_1.8 S5 MX5SA4**	591	**S501_1.8 P132 BE132MB4**	**S501_1.8 P160 BX160MA4**	592
959	90	1.2	3.0	2360	**S501_3.0 S4 ME4LB2**		591	**S501_3.0 P132 BE132MB2**		592
1020	85	1.3	1.4	2270	**S501_1.4 S4 ME4LB4**	**S501_1.4 S5 MX5SA4**	591	**S501_1.4 P132 BE132MB4**	**S501_1.4 P160 BX160MA4**	592
1213	71	1.4	2.4	2220	**S501_2.4 S4 ME4LB2**		591	**S501_2.4 P132 BE132MB2**		592
1221	71	1.0	2.4	1460	**S401_2.4 S4 ME4LB2**		589	**S401_2.4 P132 BE132MB2**		590
1633	53	1.6	1.8	2060	**S501_1.8 S4 ME4LB2**		591	**S501_1.8 P132 BE132MB2**		592
2055	42	2.0	1.4	1930	**S501_1.4 S4 ME4LB2**		591	**S501_1.4 P132 BE132MB2**		592
2141	40	1.2	1.4	1300	**S401_1.4 S4 ME4LB2**		589	**S401_1.4 P132 BE132MB2**		590

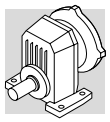

75 GEARBOX RATING CHARTS

S 10 — 21 Nm

	i	n_1 = 2800 min^{-1}					n_1 = 1400 min^{-1}					
		n_2 min^{-1}	M_{n2} Nm	P_{n1} kW	R_{n1} N	R_{n2} N	n_2 min^{-1}	M_{n2} Nm	P_{n1} kW	R_{n1} N	R_{n2} N	
S 10 1_1.4	1.4	1972	8.0	1.7	800	310	986	10.0	1.1	800	390	551
S 10 1_1.9	1.9	1489	8.0	1.3	800	360	745	10.0	0.80	800	460	
S 10 1_2.5	2.5	1120	8.0	0.96	800	420	560	10.0	0.60	800	520	
S 10 1_3.2	3.2	875	10.0	0.93	800	440	438	12.0	0.56	800	560	
S 10 1_3.8	3.8	727	10.0	0.78	800	480	364	12.0	0.47	800	610	
S 10 1_4.7	4.7	592	10.0	0.63	800	520	296	12.0	0.38	800	660	
S 10 1_6.1	6.1	458	12.0	0.59	800	560	229	15.0	0.37	800	710	
S 10 1_6.9	6.9	406	12.0	0.52	800	580	203	15.0	0.33	800	740	
S 10 1_8.9	8.9	315	8.0	0.27	800	700	158	10.0	0.17	800	880	
S 10 1_10.3	10.3	272	8.0	0.23	800	740	136	10.0	0.15	800	930	
S 10 1_12.3	12.3	227	8.0	0.19	800	800	114	10.0	0.12	800	1000	

	i	n_1 = 900 min^{-1}					n_1 = 500 min^{-1}					
		n_2 min^{-1}	M_{n2} Nm	P_{n1} kW	R_{n1} N	R_{n2} N	n_2 min^{-1}	M_{n2} Nm	P_{n1} kW	R_{n1} N	R_{n2} N	
S 10 1_1.4	1.4	634	12.0	0.81	800	450	352	14.0	0.53	800	560	551
S 10 1_1.9	1.9	479	12.0	0.61	800	520	266	14.0	0.40	800	640	
S 10 1_2.5	2.5	360	12.0	0.46	800	600	200	14.0	0.30	800	740	
S 10 1_3.2	3.2	281	14.0	0.42	800	650	156	17.0	0.28	800	790	
S 10 1_3.8	3.8	234	14.0	0.35	800	700	130	17.0	0.24	800	850	
S 10 1_4.7	4.7	190	14.0	0.28	800	770	106	17.0	0.19	800	930	
S 10 1_6.1	6.1	147	17.0	0.27	800	820	82	21	0.18	800	1000	
S 10 1_6.9	6.9	130	17.0	0.24	800	860	72	21	0.16	800	1040	
S 10 1_8.9	8.9	101	12.0	0.13	800	1020	56	14.0	0.08	800	1200	
S 10 1_10.3	10.3	87	12.0	0.11	800	1080	49	14.0	0.07	800	1200	
S 10 1_12.3	12.3	73	12.0	0.09	800	1160	41	14.0	0.06	800	1200	

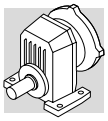

S 20 — 37 Nm

	i	n_1 = 2800 min^{-1}					n_1 = 1400 min^{-1}					
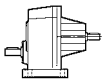		n_2 min^{-1}	M_{n2} Nm	P_{n1} kW	R_{n1} N	R_{n2} N	n_2 min^{-1}	M_{n2} Nm	P_{n1} kW	R_{n1} N	R_{n2} N	
S 20 1_1.4	1.4	2014	13.0	2.8	1000	590	1007	17.0	1.8	1000	740	
S 20 1_1.9	1.9	1481	13.0	2.1	1000	680	741	17.0	1.3	1000	860	
S 20 1_2.4	2.4	1148	21	2.6	640	680	574	26	1.6	850	860	
S 20 1_3.1	3.1	900	21	2.0	730	750	450	26	1.3	960	950	
S 20 1_3.9	3.9	712	21	1.6	820	840	356	26	0.99	1000	1060	
S 20 1_4.8	4.8	587	21	1.3	910	920	294	26	0.82	1000	1160	553
S 20 1_5.8	5.8	481	21	1.1	960	1000	241	26	0.67	1000	1260	
S 20 1_7.2	7.2	388	21	0.87	980	1090	194	26	0.54	1000	1370	
S 20 1_8.5	8.5	329	13.0	0.46	1000	1240	165	17.0	0.30	1000	1500	
S 20 1_10.8	10.8	260	13.0	0.36	1000	1350	130	17.0	0.24	1000	1500	
S 20 1_12.4	12.4	225	13.0	0.31	1000	1430	113	17.0	0.20	1000	1500	

	i	n_1 = 900 min^{-1}					n_1 = 500 min^{-1}					
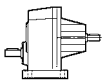		n_2 min^{-1}	M_{n2} Nm	P_{n1} kW	R_{n1} N	R_{n2} N	n_2 min^{-1}	M_{n2} Nm	P_{n1} kW	R_{n1} N	R_{n2} N	
S 20 1_1.4	1.4	647	20	1.4	1000	850	360	24	0.92	1000	1040	
S 20 1_1.9	1.9	476	20	1.0	1000	990	265	24	0.68	1000	1210	
S 20 1_2.4	2.4	369	30	1.2	990	990	205	37	0.81	1000	1200	
S 20 1_3.1	3.1	289	30	0.93	1000	1110	161	37	0.64	1000	1340	
S 20 1_3.9	3.9	229	30	0.73	1000	1230	127	37	0.50	1000	1490	
S 20 1_4.8	4.8	189	30	0.60	1000	1350	105	37	0.41	1000	1500	553
S 20 1_5.8	5.8	155	30	0.50	1000	1460	86	37	0.34	1000	1500	
S 20 1_7.2	7.2	125	30	0.40	1000	1500	69	37	0.27	1000	1500	
S 20 1_8.5	8.5	106	20	0.23	1000	1500	59	24	0.15	1000	1500	
S 20 1_10.8	10.8	84	20	0.18	1000	1500	47	24	0.12	1000	1500	
S 20 1_12.4	12.4	72	20	0.15	1000	1500	40	24	0.10	1000	1500	

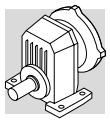

S 30 — 70 Nm

	i	n_1 = 2800 min^{-1}					n_1 = 1400 min^{-1}					
		n_2 min^{-1}	M_{n2} Nm	P_{n1} kW	R_{n1} N	R_{n2} N	n_2 min^{-1}	M_{n2} Nm	P_{n1} kW	R_{n1} N	R_{n2} N	
S 30 1_1.4	1.4	1986	24	5.1	1500	770	993	30	3.2	1500	970	555
S 30 1_1.8	1.8	1530	24	3.9	1500	870	765	30	2.5	1500	1090	
S 30 1_2.4	2.4	1157	40	4.9	1270	850	579	50	3.1	1500	1070	
S 30 1_3.1	3.1	915	40	3.9	1470	950	458	50	2.4	1500	1200	
S 30 1_3.9	3.9	711	40	3.0	1500	1070	355	50	1.9	1500	1360	
S 30 1_4.9	4.9	568	40	2.4	1500	1190	284	50	1.5	1500	1500	
S 30 1_5.8	5.8	479	40	2.0	1500	1280	239	50	1.3	1500	1610	
S 30 1_7.1	7.1	395	40	1.7	1500	1390	197	50	1.1	1500	1750	
S 30 1_8.9	8.9	315	24	0.81	1500	1650	157	30	0.50	1500	2080	
S 30 1_10.3	10.3	272	24	0.70	1500	1740	136	30	0.44	1500	2190	
S 30 1_13.1	13.1	213	24	0.55	1500	1900	107	30	0.34	1500	2400	

	i	n_1 = 900 min^{-1}					n_1 = 500 min^{-1}					
		n_2 min^{-1}	M_{n2} Nm	P_{n1} kW	R_{n1} N	R_{n2} N	n_2 min^{-1}	M_{n2} Nm	P_{n1} kW	R_{n1} N	R_{n2} N	
S 30 1_1.4	1.4	638	35	2.4	1500	1120	355	42	1.6	1500	1360	555
S 30 1_1.8	1.8	492	35	1.8	1500	1260	273	42	1.2	1500	1540	
S 30 1_2.4	2.4	372	58	2.3	1500	1240	207	70	1.5	1500	1510	
S 30 1_3.1	3.1	294	58	1.8	1500	1390	163	70	1.2	1500	1700	
S 30 1_3.9	3.9	228	58	1.4	1500	1570	127	70	0.95	1500	1920	
S 30 1_4.9	4.9	183	58	1.1	1500	1740	101	70	0.76	1500	2120	
S 30 1_5.8	5.8	154	58	0.95	1500	1870	85	70	0.64	1500	2280	
S 30 1_7.1	7.1	127	58	0.79	1500	2030	71	62	0.47	1500	2400	
S 30 1_8.9	8.9	101	35	0.38	1500	2400	56	42	0.25	1500	2400	
S 30 1_10.3	10.3	87	35	0.33	1500	2400	49	42	0.22	1500	2400	
S 30 1_13.1	13.1	69	35	0.26	1500	2400	38	37	0.15	1500	2400	

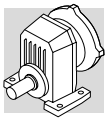

S 40 — 125 Nm

	i	n_1 = 2800 min^{-1}					n_1 = 1400 min^{-1}					
		n_2 min^{-1}	M_{n2} Nm	P_{n1} kW	R_{n1} N	R_{n2} N	n_2 min^{-1}	M_{n2} Nm	P_{n1} kW	R_{n1} N	R_{n2} N	
S 40 1_1.4	1.4	2059	48	10.6	2000	1270	1029	60	6.6	2000	1600	557
S 40 1_1.9	1.9	1514	48	7.8	2000	1450	757	60	4.9	2000	1830	
S 40 1_2.4	2.4	1172	70	8.8	1860	1490	586	90	5.6	2000	1870	
S 40 1_3.1	3.1	918	70	6.9	2000	1660	459	90	4.4	2000	2080	
S 40 1_3.8	3.8	735	70	5.5	2000	1830	367	90	3.5	2000	2290	
S 40 1_4.8	4.8	580	70	4.3	2000	2020	290	90	2.8	2000	2530	
S 40 1_6.1	6.1	461	70	3.5	2000	2220	231	90	2.2	2000	2790	
S 40 1_7.2	7.2	392	63	2.6	2000	2410	196	80	1.7	2000	3030	
S 40 1_8.6	8.6	324	48	1.7	2000	2670	162	60	1.0	2000	3370	
S 40 1_10.7	10.7	262	40	1.1	2000	2930	131	50	0.70	2000	3690	
S 40 1_12.4	12.4	226	40	1.0	2000	3100	113	50	0.60	2000	3800	

	i	n_1 = 900 min^{-1}					n_1 = 500 min^{-1}					
		n_2 min^{-1}	M_{n2} Nm	P_{n1} kW	R_{n1} N	R_{n2} N	n_2 min^{-1}	M_{n2} Nm	P_{n1} kW	R_{n1} N	R_{n2} N	
S 40 1_1.4	1.4	662	70	4.9	2000	1850	368	85	3.3	2000	2250	557
S 40 1_1.9	1.9	486	70	3.6	2000	2120	270	85	2.5	2000	2580	
S 40 1_2.4	2.4	377	105	4.2	2000	2160	209	125	2.8	2000	2650	
S 40 1_3.1	3.1	295	105	3.3	2000	2400	164	125	2.2	2000	2940	
S 40 1_3.8	3.8	236	105	2.7	2000	2650	131	125	1.8	2000	3240	
S 40 1_4.8	4.8	186	105	2.1	2000	2930	104	125	1.4	2000	3580	
S 40 1_6.1	6.1	148	105	1.7	2000	3220	82	110	1.0	2000	3800	
S 40 1_7.2	7.2	126	90	1.2	2000	3530	70	90	0.67	2000	3800	
S 40 1_8.6	8.6	104	70	0.78	2000	3800	58	85	0.53	2000	3800	
S 40 1_10.7	10.7	84	58	0.52	2000	3800	47	70	0.35	2000	3800	
S 40 1_12.4	12.4	73	58	0.45	2000	3800	40	70	0.30	2000	3800	

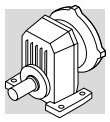

S 50 — 200 Nm

	i	n_1 = 2800 min^{-1}					n_1 = 1400 min^{-1}					
		n_2 min^{-1}	M_{n2} Nm	P_{n1} kW	R_{n1} N	R_{n2} N	n_2 min^{-1}	M_{n2} Nm	P_{n1} kW	R_{n1} N	R_{n2} N	
S 50 1_1.4	1.4	1972	85	17.9	730	1720	986	110	11.6	730	2150	559
S 50 1_1.8	1.8	1564	85	14.2	1220	1920	782	110	9.2	1370	2400	
S 50 1_2.4	2.4	1162	100	12.4	930	2110	581	130	8.1	970	2640	
S 50 1_3.0	3.0	921	110	10.8	860	2300	461	140	6.9	1020	2880	
S 50 1_3.8	3.8	729	120	9.3	640	2480	365	150	5.8	860	3130	
S 50 1_4.8	4.8	589	120	7.6	880	2710	295	150	4.7	1160	3420	
S 50 1_6.1	6.1	462	100	4.9	1980	3100	231	130	3.2	2330	3880	
S 50 1_7.4	7.4	378	100	4.0	2060	3340	189	130	2.6	2400	4190	
S 50 1_8.8	8.8	319	85	2.9	2400	3640	160	110	1.9	2400	4570	
S 50 1_10.5	10.5	268	85	2.4	2400	3880	134	110	1.6	2400	4870	
S 50 1_12.9	12.9	217	80	1.9	2400	4200	109	100	1.2	2400	5300	

	i	n_1 = 900 min^{-1}					n_1 = 500 min^{-1}					
		n_2 min^{-1}	M_{n2} Nm	P_{n1} kW	R_{n1} N	R_{n2} N	n_2 min^{-1}	M_{n2} Nm	P_{n1} kW	R_{n1} N	R_{n2} N	
S 50 1_1.4	1.4	634	125	8.5	1010	2510	352	155	5.8	1040	3040	559
S 50 1_1.8	1.8	503	125	6.7	1730	2790	279	155	4.6	1940	3380	
S 50 1_2.4	2.4	373	150	6.0	1160	3060	207	180	4.0	1530	3730	
S 50 1_3.0	3.0	296	160	5.1	1290	3350	164	200	3.5	1310	4050	
S 50 1_3.8	3.8	234	175	4.4	940	3620	130	200	2.8	1740	4460	
S 50 1_4.8	4.8	189	175	3.5	1290	3960	105	180	2.0	2400	4970	
S 50 1_6.1	6.1	149	150	2.4	2400	4500	83	150	1.3	2400	5620	
S 50 1_7.4	7.4	122	140	1.8	2400	4900	68	140	1.0	2400	6100	
S 50 1_8.8	8.8	103	125	1.4	2400	5310	57	125	0.80	2400	6580	
S 50 1_10.5	10.5	86	115	1.1	2400	5700	48	115	0.60	2400	7050	
S 50 1_12.9	12.9	70	100	0.70	2400	6210	39	100	0.40	2400	7200	

76 MOTOR AVAILABILITY

Please be aware that motor-gearbox combinations resulting from the following charts are purely based on geometrical compatibility.

When selecting a gearmotor, refer to procedure specified at paragraph 12 and observe particularly the condition $S \geq f_s$.

(E 69)

		IEC_ 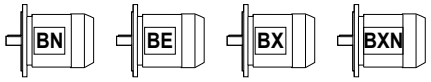 (IM B5)															
		BN	**BE**	**BX**	**BXN**	**BN**	**BE**	**BX**	**BXN**	**BN**	**BE**	**BX**	**BXN**	**BN**	**BE**	**BX**	**BXN**
P_{n1}(#) [kW]	**2p**	0.37	—	—	—	0.75	—	—	—	1.5	1.1	—	—	2.2	2.2	—	—
	4p	0.25	0.18	0.25	0.18	0.55	0.37	0.37	0.37	1.1	0.75	0.75	0.75	1.85	1.5	1.5	1.5
	6p	0.12	—	—	—	0.37	—	—	—	0.75	—	—	—	1.1	0.75	—	—
		P63				**P71**				**P80**				**P90**			
S 10 1	**i =**	1.4_12.3				1.4_12.3				1.4_8.9				1.4_8.9			
S 20 1		1.9_12.4				1.9_12.4				1.4_10.8				1.4_10.8			
S 30 1		2.4_13.1				2.4_13.1				1.4_13.1				1.4_13.1			
S 40 1		3.1_12.4				3.1_12.4				1.4_12.4				1.4_12.4			
S 50 1		3.8_12.9				3.8_12.9				1.4_12.9				1.4_12.9			

		IEC_ 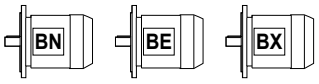 (IM B5)																	
		BN	**BE**	**BX**	**BXN**	**BN**	**BE**	**BX**	**BXN**	**BN**	**BE**	**BX**	**BXN**	**BN**	**BE**	**BX**	**BN**	**BE**	**BX**
P_{n1}(#) [kW]	**2p**	4	3	—	—	4	4	—	—	9.2	9.2	—	—	18.5	18.5	—	22	—	—
	4p	3	3	3	3	4	4	4	4	9.2	9.2	7.5	7.5	15	15	15	22	22	22
	6p	1.85	1.5	—	—	2.2	2.2	—	—	5.5	4	—	—	11	7.5	—	15	—	—
		P100				**P112**				**P132**				**P160**			**P180**		
S 10 1	**i =**	1.4_8.9				1.4_8.9													
S 20 1		1.4_10.8				1.4_10.8													
S 30 1		1.4_13.1				1.4_13.1				1.4_4.9									
S 40 1		1.4_12.4				1.4_12.4				1.4_6.1									
S 50 1		1.4_12.9				1.4_12.9				1.4_7.4				1.4_7.4			1.4_7.4		

(#) **P_{n1}** = maximum installable power on input P_

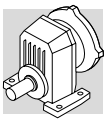

(E 70)

		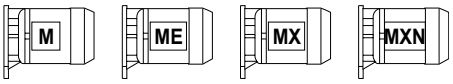					
		M05 - ME05 - MXN05	M1 - ME1 - MXN10	ME2-MX2-MXN20	ME3 - MX3	ME4 - MX4	ME5 - MX5
S 10 1	**i =**	1.4_12.3	1.4_6.9	1.4_8.9	1.4_8.9		
S 20 1		1.9_12.4	1.9_8.5	1.4_10.8	1.4_10.8		
S 30 1			2.4_10.3	1.4_13.1	1.4_13.1	1.4_4.9	
S 40 1			3.1_12.4	1.4_12.4	1.4_12.4	1.4_6.1	
S 50 1			3.8_12.9	1.4_12.9	1.4_12.9	1.4_7.4	1.4_7.4

77 MOMENT OF INERTIA

The following charts indicate moment of inertia values Jr [kgm^2] referred to the gear unit high speed shaft. A key to the symbols used follows:



Values under this icon refer to compact gear units, without motor. To obtain the overall moment of inertia for the gearmotor just add the value of the inertia for the specific compact motor, given in the relevant rating chart.



Values under this symbol refer to gearboxes with IEC motor adaptor (IEC size...).

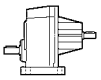

This symbol refers to gearbox values.

S 10

	i	J (•10^{-4}) [kgm^2]							
			IEC						
			63	71	80	90	100	112	
S 10 1_1.4	1.4	0.33	1.8	1.8	3.2	3.1	4.4	4.4	1.2
S 10 1_1.9	1.9	0.22	1.7	1.7	3.1	3.0	4.3	4.3	1.1
S 10 1_2.5	2.5	0.16	1.6	1.6	3.0	2.9	4.2	4.2	1.0
S 10 1_3.2	3.2	0.10	1.6	1.6	3.0	2.9	4.2	4.2	0.97
S 10 1_3.8	3.8	0.08	1.5	1.5	2.9	2.9	4.2	4.2	0.95
S 10 1_4.7	4.7	0.06	1.5	1.5	2.9	2.8	4.1	4.1	0.93
S 10 1_6.1	6.1	0.04	1.5	1.5	2.9	2.8	4.1	4.1	0.92
S 10 1_6.9	6.9	0.03	1.5	1.5	2.9	2.8	4.1	4.1	0.91
S 10 1_8.9	8.9	0.02	1.5	1.5	2.9	2.8	4.1	4.1	0.90
S 10 1_10.3	10.3	0.02	1.5	1.5	—	—	—	—	0.89
S 10 1_12.3	12.3	0.01	1.5	1.5	—	—	—	—	0.89

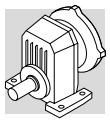

S 20

	i	J (•10-4) [kgm2]							
			IEC						
			63	71	80	90	100	112	
S 20 1_1.4	1.4	0.73	—	—	3.6	3.5	4.8	4.8	2.7
S 20 1_1.9	1.9	0.48	1.9	1.9	3.3	3.3	4.6	4.6	2.4
S 20 1_2.4	2.4	0.34	1.8	1.8	3.2	3.1	4.4	4.4	2.3
S 20 1_3.1	3.1	0.20	1.7	1.7	3.0	3.0	4.3	4.3	2.1
S 20 1_3.9	3.9	0.14	1.6	1.6	3.0	2.9	4.2	4.2	2.1
S 20 1_4.8	4.8	0.12	1.6	1.6	3.0	2.9	4.2	4.2	2.0
S 20 1_5.8	5.8	0.08	1.6	1.5	2.9	2.9	4.2	4.2	2.0
S 20 1_7.2	7.2	0.06	1.5	1.5	2.9	2.8	4.1	4.1	2.0
S 20 1_8.5	8.5	0.05	1.5	1.5	2.9	2.8	4.1	4.1	2.0
S 20 1_10.8	10.8	0.03	1.5	1.5	2.9	2.8	4.1	4.1	1.9
S 20 1_12.4	12.4	0.02	1.5	1.5	—	—	—	—	1.9

S 30

	i	J (•10-4) [kgm2]								
			IEC							
			63	71	80	90	100	112	132	
S 30 1_1.4	1.4	1.5	—	—	4.3	4.3	5.6	5.6	18	3.8
S 30 1_1.8	1.8	1.1	—	—	3.9	3.8	5.1	5.1	18	3.4
S 30 1_2.4	2.4	0.59	2.1	2.0	3.4	3.4	4.7	4.7	17	2.9
S 30 1_3.1	3.1	0.45	1.9	1.9	3.3	3.2	4.5	4.5	17	2.8
S 30 1_3.9	3.9	0.33	1.8	1.8	3.2	3.1	4.4	4.4	17	2.7
S 30 1_4.9	4.9	0.24	1.7	1.7	3.1	3.0	4.3	4.3	17	2.6
S 30 1_5.8	5.8	0.19	1.7	1.7	3.0	3.0	4.3	4.3	—	2.6
S 30 1_7.1	7.1	0.14	1.6	1.6	3.0	2.9	4.2	4.2	—	2.5
S 30 1_8.9	8.9	0.10	1.6	1.6	2.9	2.9	4.2	4.2	—	2.5
S 30 1_10.3	10.3	0.08	1.5	1.5	2.9	2.9	4.2	4.2	—	2.4
S 30 1_13.1	13.1	0.05	1.5	1.5	2.9	2.8	4.1	4.1	—	2.4

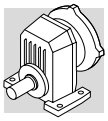

S 40

	i	J (•10-4) [kgm2]								
			IEC							
			63	71	80	90	100	112	132	
S 40 1_1.4	1.4	3.7	—	—	6.5	6.5	7.8	7.8	23	14
S 40 1_1.9	1.9	2.4	—	—	5.2	5.2	6.5	6.5	21	13
S 40 1_2.4	2.4	1.6	—	—	4.4	4.4	5.7	5.7	21	12
S 40 1_3.1	3.1	1.1	2.6	2.6	4.0	3.9	5.2	5.2	20	12
S 40 1_3.8	3.8	0.82	2.3	2.3	3.7	3.6	4.9	4.9	18	11
S 40 1_4.8	4.8	0.50	2.0	2.0	3.3	3.3	4.6	4.6	18	11
S 40 1_6.1	6.1	0.39	1.8	1.8	3.2	3.2	4.5	4.5	18	11
S 40 1_7.2	7.2	0.30	1.8	1.8	3.1	3.1	4.4	4.4	—	11
S 40 1_8.6	8.6	0.22	1.7	1.7	3.1	3.0	4.3	4.3	—	11
S 40 1_10.7	10.7	0.15	1.6	1.6	3.0	2.9	4.2	4.2	—	11
S 40 1_12.4	12.4	0.12	1.6	1.6	3.0	2.8	4.2	4.2	—	11

S 50

	i	J (•10-4) [kgm2]									
			IEC								
			63	71	80	90	100	112	132	160	180	
S 50 1_1.4	1.4	8.2	—	—	11	11	12	12	27	86	84	19
S 50 1_1.8	1.8	5.9	—	—	8.8	8.7	10	10	25	84	82	16
S 50 1_2.4	2.4	3.9	—	—	6.8	6.7	8.0	8.0	23	82	80	14
S 50 1_3.0	3.0	2.7	—	—	5.5	5.5	6.8	6.8	22	81	79	13
S 50 1_3.8	3.8	1.9	3.3	3.3	4.7	4.6	5.9	5.9	21	80	78	12
S 50 1_4.8	4.8	1.4	2.8	2.8	4.2	4.1	5.4	5.4	21	79	77	12
S 50 1_6.1	6.1	0.89	2.4	2.4	3.7	3.7	5.0	5.0	21	79	77	11
S 50 1_7.4	7.4	0.63	2.1	2.1	3.5	3.4	4.7	4.7	20	79	77	11
S 50 1_8.8	8.8	0.50	2.0	2.0	3.4	3.3	4.6	4.6	—	—	—	11
S 50 1_10.5	10.5	0.36	1.8	1.8	3.2	3.1	4.4	4.4	—	—	—	11
S 50 1_12.9	12.9	0.25	1.7	1.7	3.1	3.0	4.3	4.3	—	—	—	11

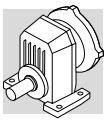

78 DIMENSIONS

S 10...M/ME/MX/MXN

P

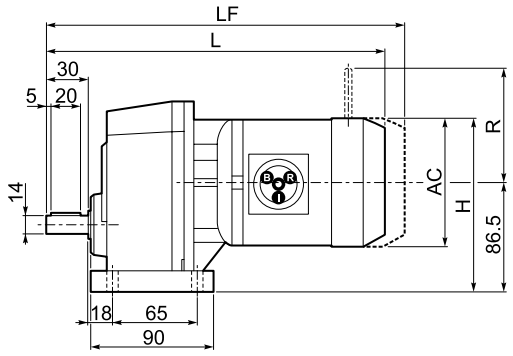

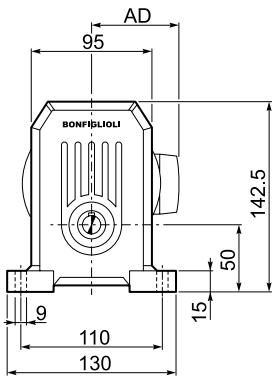

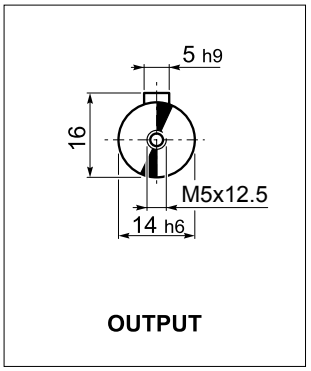

F

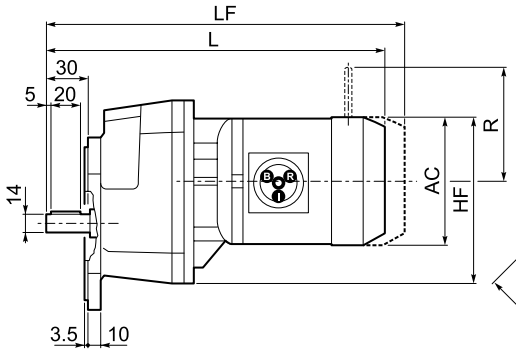

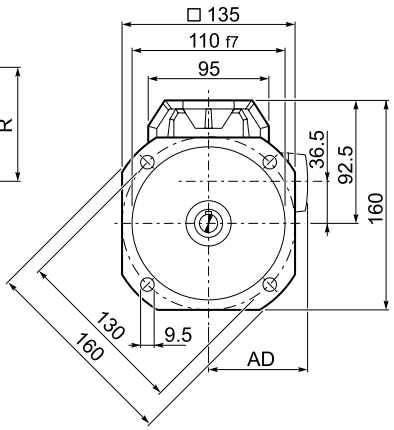

			Gearmotor - Without brake							Gearmotor - With brake								
										M...FD				M...FDD				
			AC	H	HF	L		AD	Kg	LF	Kg	R	AD	LF		Kg	R	AD
						plastic	metal							plastic	metal			
S 10 1	S05	M05	121	147	143	—	315	95	8	381	11	96	122	—	—	—	—	—
		ME05	121	147	143	—	315	95	8	381	11	96	119	—	—	—	—	—
		MX05	121	147	143	—	315	95	8	381	11	96	119	—	—	—	—	—
	SX05	MXN05	123	148	143	361.5	339.5	122.2	9.8	—	—	—	—	388.5	354.2	10.9	106	136
	S1	M1	137	155	151	—	344	102	10	405	13	103	135	—	—	—	—	—
		ME1	137	155	151	—	344	102	10	405	13	103	135	—	—	—	—	—
		MX1	137	155	151	—	344	102	10	405	13	103	135	—	—	—	—	—
	SX10	MXN10	138	155.5	151	373	353.5	123.3	12.4	—	—	—	—	409	374.1	14.8	106	138
	S2	M2S	156	164	160	—	367	111	13	443	17	129	146	—	—	—	—	—
		ME2S	156	164	160	—	367	111	13	443	19.1	129	143	—	—	—	—	—
		MX2S	156	164	160	—	411	111	18.1	501	26.3	129	143	—	—	—	—	—
	SX20	MXN20	158	165	160	434.5	418.2	132.8	20.3	—	—	—	—	475.5	437.3	22.5	115	148
	S3	ME3S	195	184	180	—	416	135	20.5	512	28.4	160	155	—	—	—	—	—
		MX3S	195	184	180	—	448	135	23.5	540	33.4	160	155	—	—	—	—	—
		ME3L	195	184	180	—	448	135	21	539	34.9	160	155	—	—	—	—	—
		MX3L	195	184	180	—	492	135	27	584	42.4	160	155	—	—	—	—	—

S 10...P (IEC)

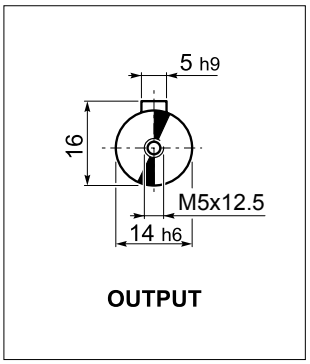

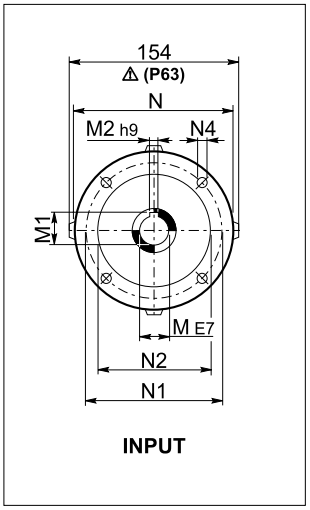

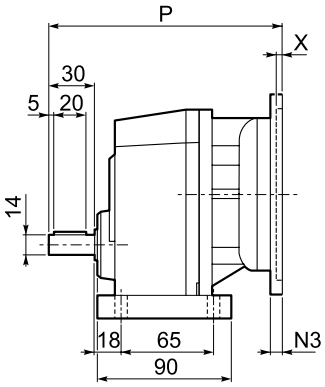

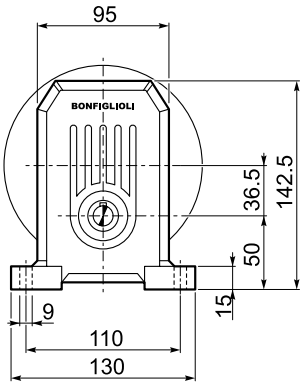

P

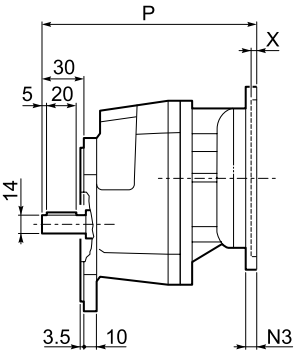

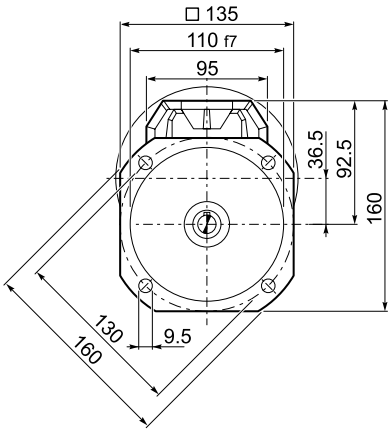

F

		M	M1	M2	N	N1	N2	N3	N4	P	X	Kg
S 10 1	**P63**	11	12.8	4	140	115	95	—	M8x10	189	4	5
S 10 1	**P71**	14	16.3	5	160	130	110	—	M8x10	189	4.5	5
S 10 1	**P80**	19	21.8	6	200	165	130	—	M10x14.5	208	4	6
S 10 1	**P90**	24	27.3	8	200	165	130	—	M10x14.5	208	4	6
S 10 1	**P100**	28	31.3	8	250	215	180	—	M12x16	218	4.5	10
S 10 1	**P112**	28	31.3	8	250	215	180	—	M12x16	218	4.5	10

S 10...HS

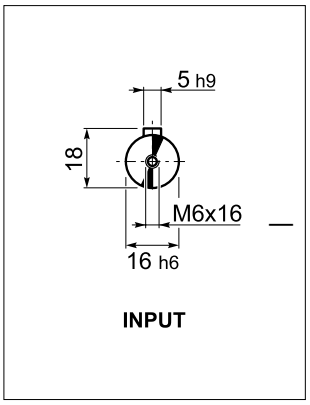

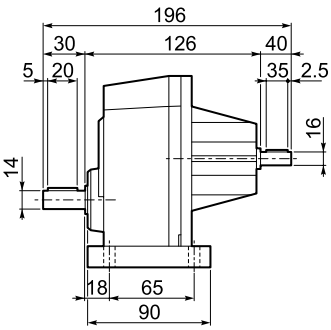

P

Kg	4.4

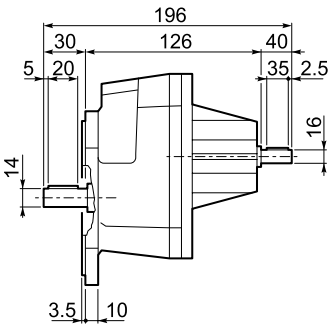

F

Kg	4.5

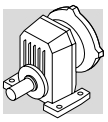

S 20...M/ME/MX/MXN

P

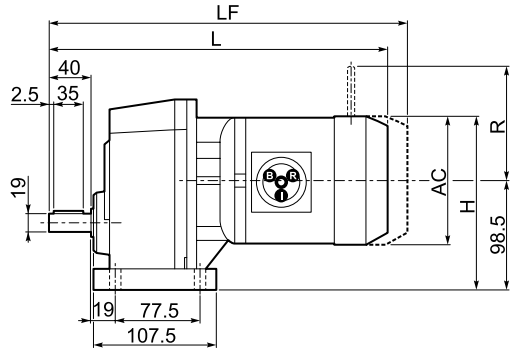

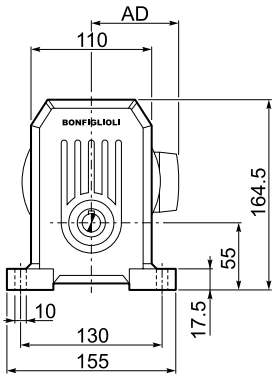

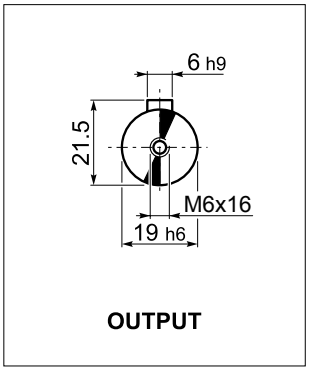

F

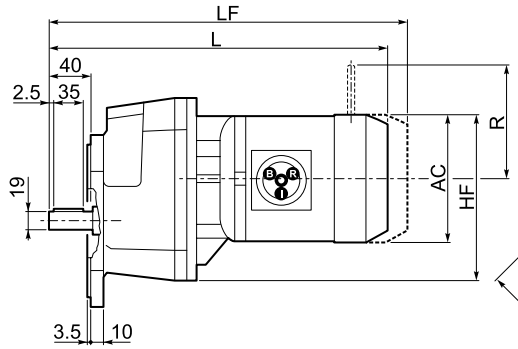

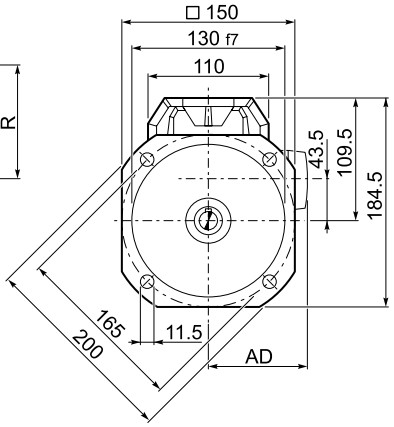

			Gearmotor - Without brake							Gearmotor - With brake								
										M...FD				M...FDD				
			AC	H	HF	L		AD	Kg	LF	Kg	R	AD	LF		Kg	R	AD
						plastic	metal							plastic	metal			
S 20 1	S05	M05	121	159	153	—	333.5	95	10	399.5	12	96	122	—	—	—	—	—
		ME05	121	159	153	—	333.5	95	10	399.5	12	96	119	—	—	—	—	—
		MX05	121	159	153	—	333.5	95	10	399.5	12	96	119	—	—	—	—	—
	SX05	MXN05	123	160	153	380	358	122.3	11.8	—	—	—	—	407	372.7	12.9	106	136
	S1	M1	137	167	161	—	362.5	102	12	423.5	14	103	135	—	—	—	—	—
		ME1	137	167	161	—	362.5	102	12	423.5	14	103	135	—	—	—	—	—
		MX1	137	167	161	—	362.5	102	12	423.5	14	103	135	—	—	—	—	—
	SX10	MXN10	138	167.5	161	391.5	372	123.3	14.4	—	—	—	—	427.5	392.6	16.8	106	138
	S2	M2S	156	176	170	—	385.5	111	16	461.5	19	129	146	—	—	—	—	—
		ME2S	156	176	170	—	385.5	111	16	461.5	21.1	129	143	—	—	—	—	—
		MX2S	156	176	170	—	429.5	111	21.1	501.5	28.3	129	143	—	—	—	—	—
	SX20	MXN20	158	177	170	483	466.7	132.8	23.3	—	—	—	—	524	485.8	25.5	115	148
	S3	ME3S	195	196	190	—	434.5	135	21.5	530.5	30.4	160	155	—	—	—	—	—
		MX3S	195	196	190	—	466.5	135	24.5	556.5	35.4	160	155	—	—	—	—	—
		ME3L	195	196	190	—	466.5	135	26	557.5	36.9	160	155	—	—	—	—	—
		MX3L	195	196	190	—	510.5	135	32	602.5	44.4	160	155	—	—	—	—	—

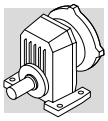

S 20...P(IEC)

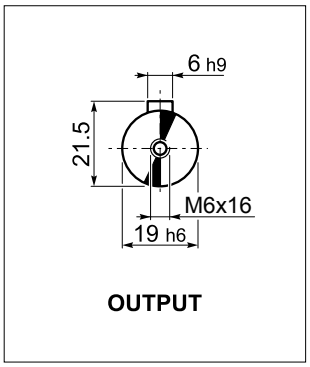

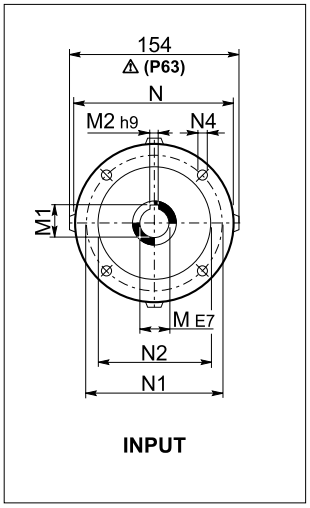

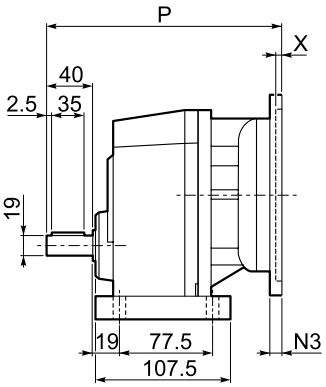

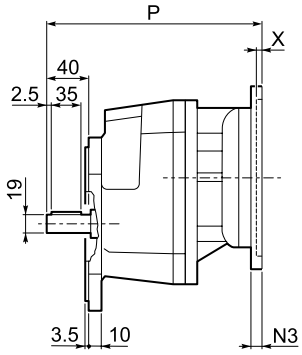

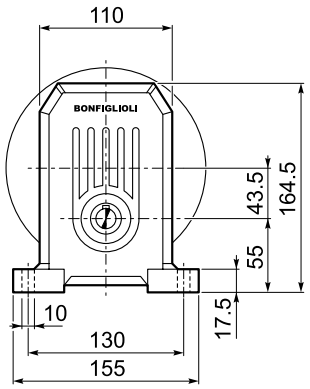

P

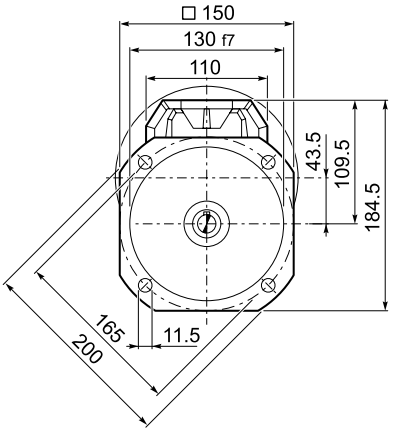

F

		M	M1	M2	N	N1	N2	N3	N4	P	X	Kg
S 20 1	**P63**	11	12.8	4	140	115	95	—	M8x10	207	4	6
S 20 1	**P71**	14	16.3	5	160	130	110	—	M8x10	207	4.5	6
S 20 1	**P80**	19	21.8	6	200	165	130	—	M10x14.5	227	4	7
S 20 1	**P90**	24	27.3	8	200	165	130	—	M10x14.5	227	4	7
S 20 1	**P100**	28	31.3	8	250	215	180	—	M12x16	237	4.5	11
S 20 1	**P112**	28	31.3	8	250	215	180	—	M12x16	237	4.5	11

S 20...HS

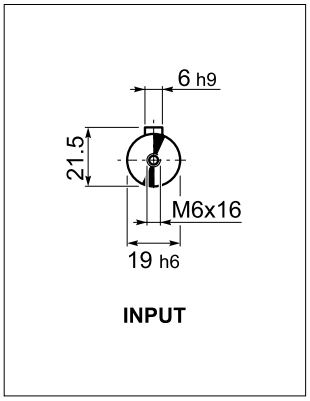

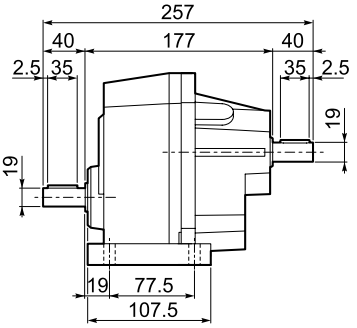

P

Kg	6.0

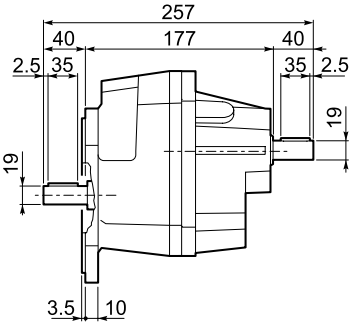

F

Kg	6.2

P

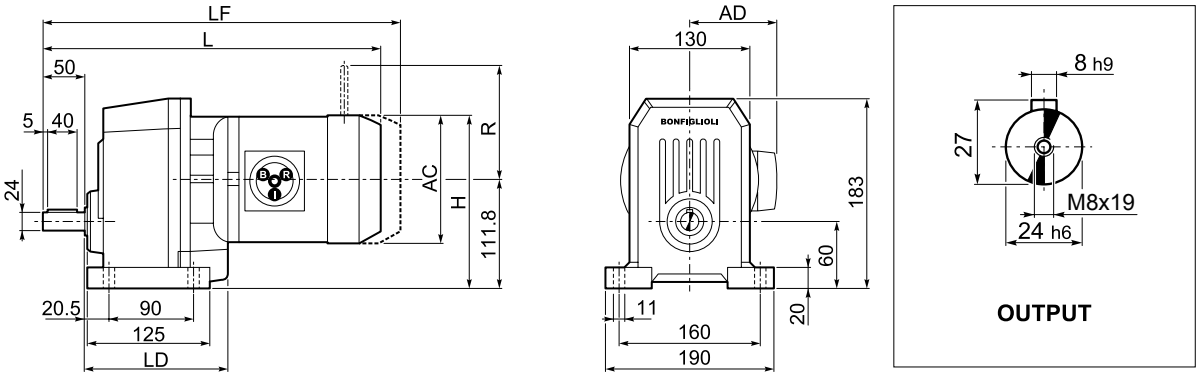

F

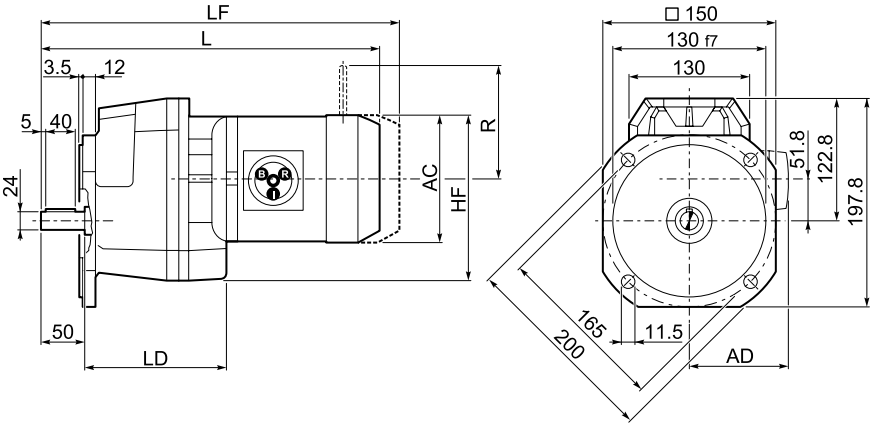

				Gearmotor - Without brake								Gearmotor - With brake								
												M...FD				M...FDD				
				AC	H	HF	L		LD	AD	Kg	LF	Kg	R	AD	LF		Kg	R	AD
							plastic	metal								plastic	metal			
S 30 1	S1	M1		137	180	177	—	387.5	140.5	102	14	448.5	16	103	135	—	—	—	—	—
		ME1		137	180	177	—	387.5	140.5	102	14	448.5	16	103	135	—	—	—	—	—
		MX1		137	180	177	—	387.5	140.5	102	14	448.5	16	103	135	—	—	—	—	—
	SX10	MXN10		138	180	177.5	416.5	397	140.5	123.3	16.4	—	—	—	—	452.5	417.6	18.8	106	138
	S2	M2S		156	190	186	—	410.5	152.5	111	18	486.5	21	129	146	—	—	—	—	—
		ME2S		156	190	186	—	410.5	152.5	111	18	486.5	23.1	129	143	—	—	—	—	—
		MX2S		156	190	186	—	454.5	152.5	111	23.1	526.5	30.3	129	143	—	—	—	—	—
	S3	ME3S		195	209	206	—	459.5	162.5	135	24.5	555.5	32.4	160	155	—	—	—	—	—
		MX3S		195	209	206	—	491.5	162.5	135	27.5	569.5	37.4	160	155	—	—	—	—	—
		ME3L		195	209	206	—	491.5	162.5	135	32	582.5	38.9	160	155	—	—	—	—	—
		MX3L		195	209	206	—	535.5	162.5	135	38	611.5	46.4	160	155	—	—	—	—	—
	S4	ME4	MX4	258	240.8	237	—	599.5	—	193	71	684.5	58.4	204	210	—	—	—	—	—
		ME4LB	MX4LA	258	240.8	237	—	634.5	—	193	79	709.5	76.4	226	210	—	—	—	—	—

S 30...P(IEC)

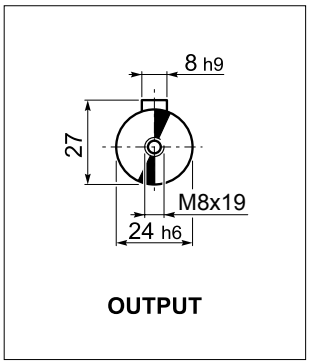

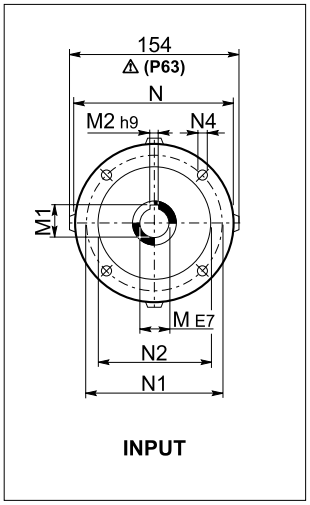

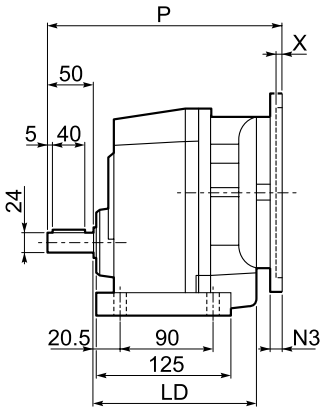

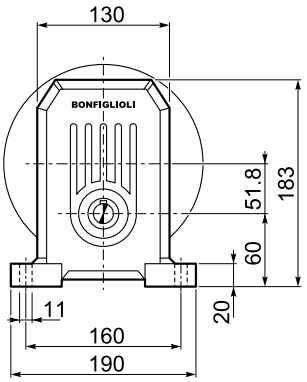

P

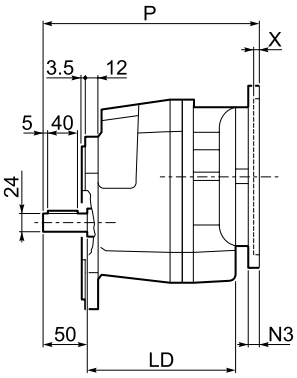

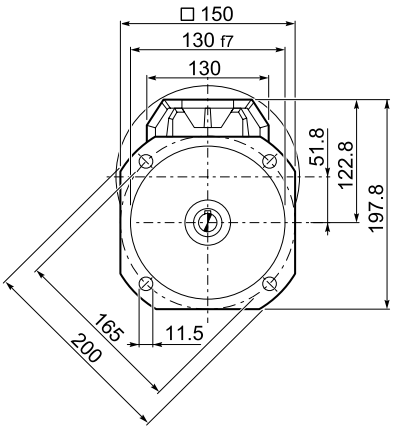

F

		LD	M	M1	M2	N	N1	N2	N3	N4	P	X	Kg
S 30 1	**P63**	152.5	11	12.8	4	140	115	95	—	M8x10	232	4	8
S 30 1	**P71**	152.5	14	16.3	5	160	130	110	—	M8x10	232	4.5	8
S 30 1	**P80**	162.5	19	21.8	6	200	165	130	—	M10x14.5	252	4	9
S 30 1	**P90**	162.5	24	27.3	8	200	165	130	—	M10x14.5	252	4	9
S 30 1	**P100**	162.5	28	31.3	8	250	215	180	—	M12x16	262	4.5	13
S 30 1	**P112**	162.5	28	31.3	8	250	215	180	—	M12x16	262	4.5	13
S 30 1	**P132**	—	38	41.3	10	300	265	230	16	14	298.5	5	21

S 30...HS

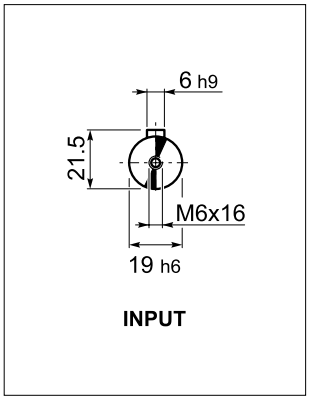

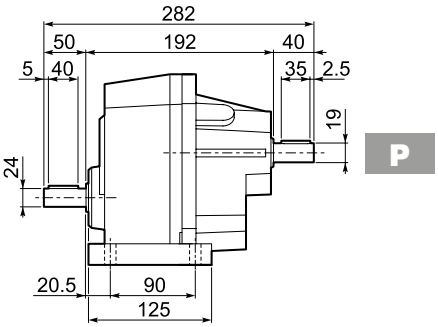

P

Kg	9.0

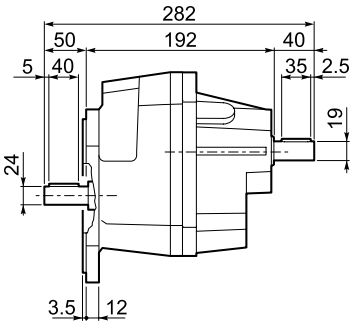

F

Kg	9.3

S 40...M/ME/MX

P

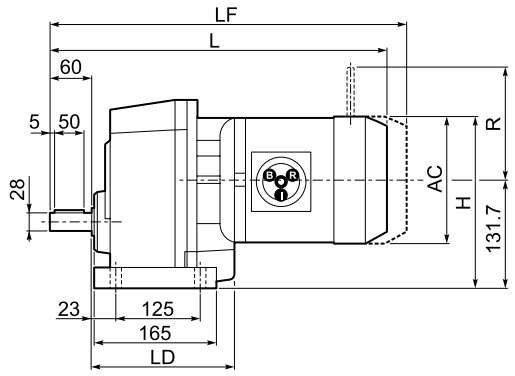

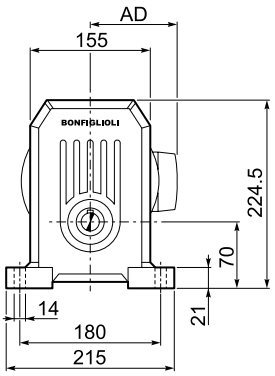

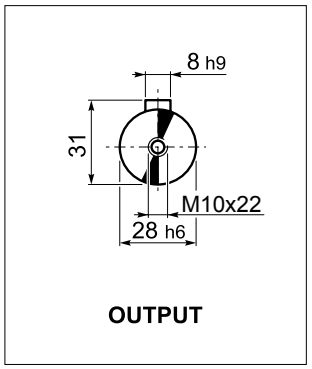

F

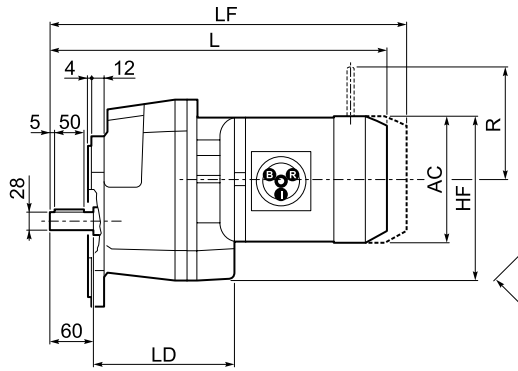

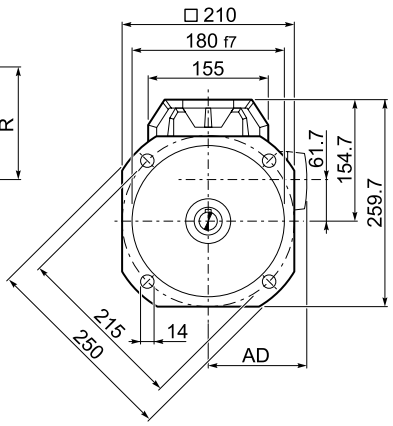

				Gearmotor - Without brake							Gearmotor - With brake			
											M...FD			
				AC	H	HF	L	LD	AD	Kg	LF	Kg	R	AD
S 40 1	S1	M1		137	200	197	429.5	168	102	28	490.5	31	103	135
		ME1		137	200	197	429.5	168	102	28	490.5	31	103	135
		MX1		137	200	197	429.5	168	102	28	490.5	31	103	135
	S2	M2S		156	210	206	452.5	183.5	111	34	528.5	37	129	146
		ME2S		156	210	206	452.5	183.5	111	34	528.5	39.1	129	143
		MX2S		156	210	206	496.5	183.5	111	39.1	568.5	46.3	129	143
	S3	ME3S		195	229	226	501.5	199.5	135	40.5	597.5	48.5	160	155
		MX3S		195	229	226	533.5	199.5	135	43.5	623.5	53.4	160	155
		ME3L		195	229	226	533.5	199.5	135	48	624.5	54.9	160	155
		MX3L		195	229	226	577.5	199.5	135	54	669.5	62.4	160	155
	S4	ME4	MX4	258	261	257	641.5	—	193	82	726.5	74.4	204	210
		ME4LB	MX4LA	258	261	257	676.5	—	193	90	751.5	96.4	226	210

S 40...P(IEC)

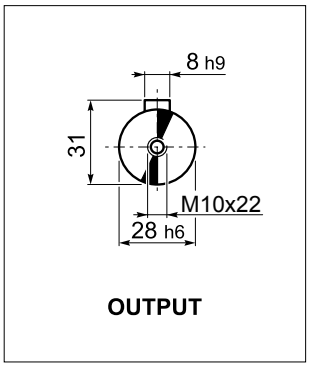

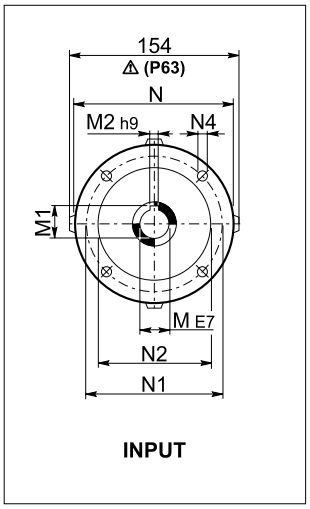

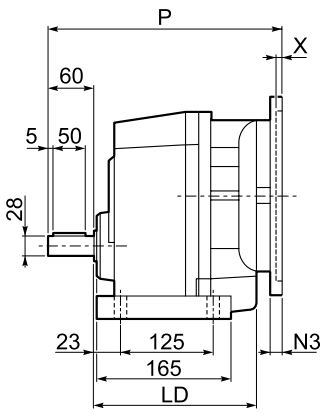

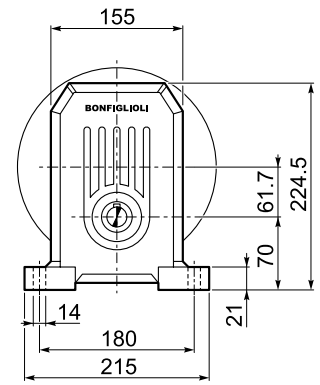

P

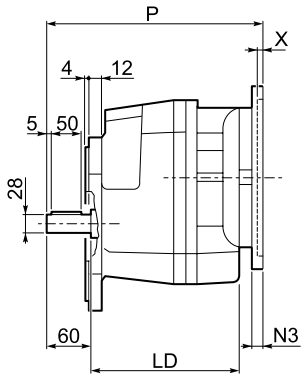

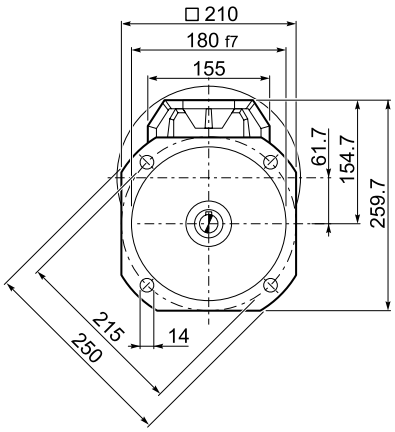

F

		LD	M	M1	M2	N	N1	N2	N3	N4	P	X	Kg
S 40 1	**P63**	183.5	11	12.8	4	140	115	95	—	M8x10	274	4	25
S 40 1	**P71**	183.5	14	16.3	5	160	130	110	—	M8x10	274	4.5	26
S 40 1	**P80**	199.5	19	21.8	6	200	165	130	—	M10x14.5	294	4	26
S 40 1	**P90**	199.5	24	27.3	8	200	165	130	—	M10x14.5	294	4	30
S 40 1	**P100**	—	28	31.3	8	250	215	180	—	M12x16	304	4.5	30
S 40 1	**P112**	—	28	31.3	8	250	215	180	—	M12x16	304	4.5	30
S 40 1	**P132**	—	38	41.3	10	300	265	230	16	14	340	5	32

S 40...HS

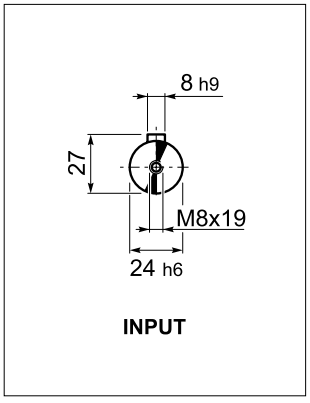

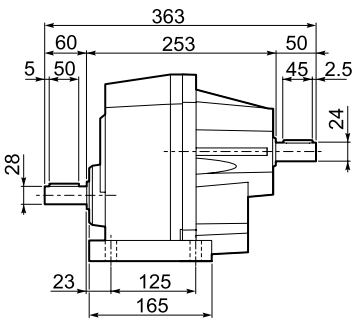

P

Kg	26.0

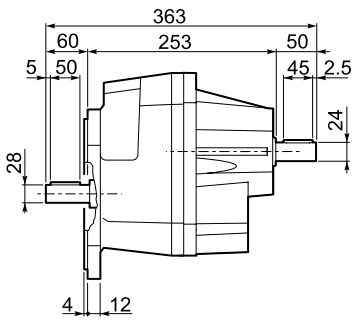

F

Kg	27.7

P

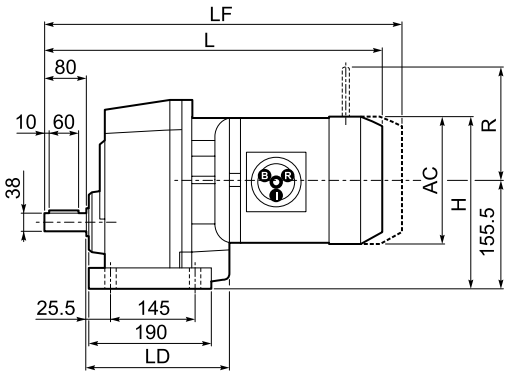

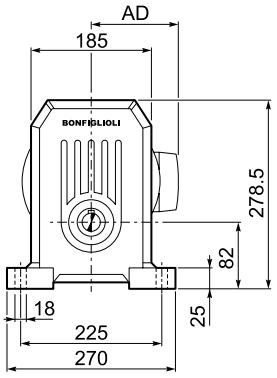

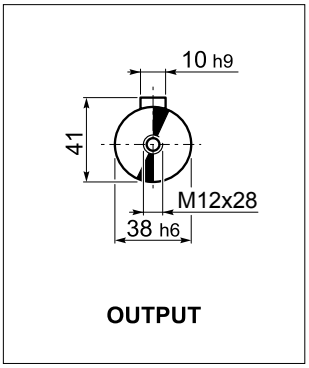

F

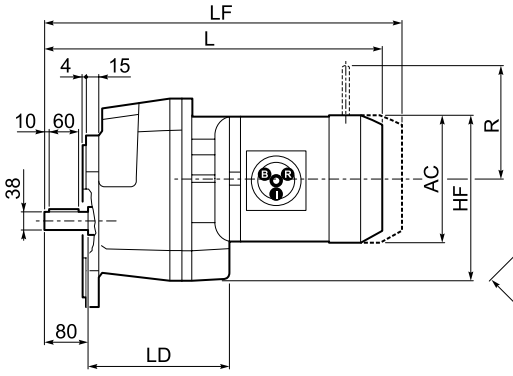

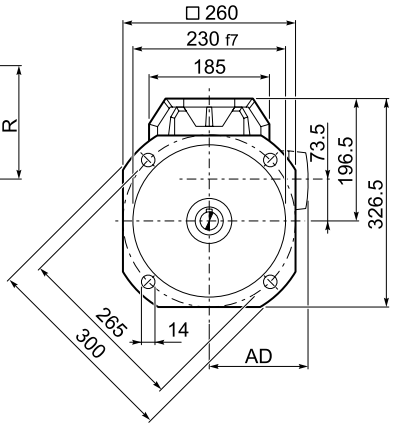

				Gearmotor - Without brake							Gearmotor - With brake			
											M...FD			
				AC	H	HF	L	LD	AD	Kg	LF	Kg	R	AD
S 50 1	S1	M1		137	225	222	469	—	102	40	530	42	103	135
		ME1		137	225	222	469	—	102	40	530	42	103	135
		MX1		137	225	222	469	—	102	40	530	42	103	135
	S2	M2S		156	233	230	492.5	204.5	111	44	568.5	47	129	146
		ME2S		156	233	230	492.5	204.5	111	44	568.5	49.1	129	143
		MX2S		156	233	230	536.5	204.5	111	49.1	608.5	56.3	129	143
	S3	ME3S		195	253	250	541.5	219.5	135	52.5	637.5	58.4	160	155
		MX3S		195	253	250	573.5	219.5	135	55.5	663.5	63.4	160	155
		ME3L		195	253	250	573.5	219.5	135	60	664.5	64.9	160	155
		MX3L		195	253	250	617.5	219.5	135	66	709.5	72.4	160	155
	S4	ME4	MX4	258	284	281	681.5	204.5	193	86	784.5	106.4	204	210
		ME4LB	MX4LA	258	284	281	716.5	204.5	193	94	809.5	116.4	226	210
	S5	ME5S	MX5S	310	310.5	307	768	—	245	114	872.5	176.4	266	245
		ME5L	MX5L	310	310.5	307	812	—	245	130	916.5	187.4	266	245

S 50...P(IEC)

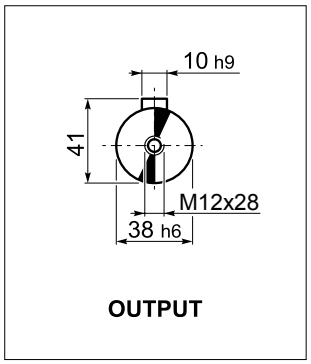

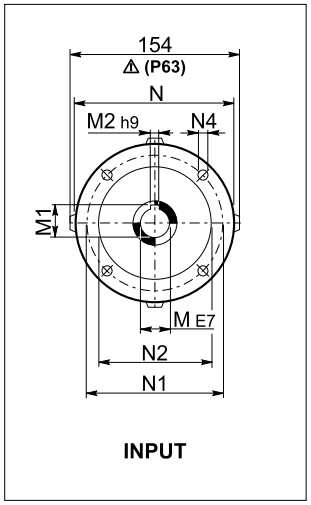

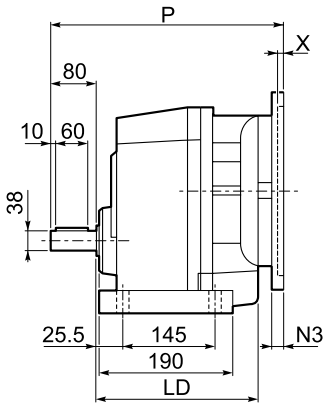

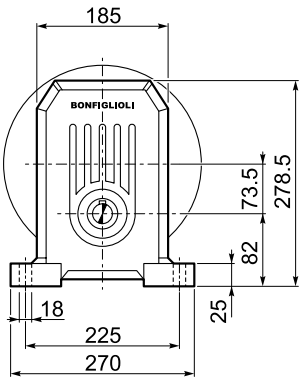

P

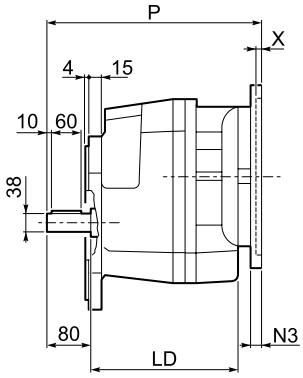

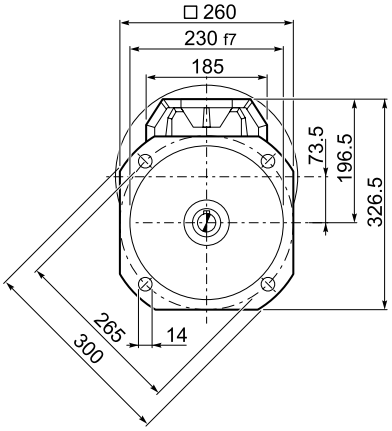

F

		LD	M	M1	M2	N	N1	N2	N3	N4	P	X	Kg
S 50 1	**P63**	204.5	11	12.8	4	140	115	95	—	M8x10	314	4	35
S 50 1	**P71**	204.5	14	12.8	4	160	130	110	—	M8x10	314	4.5	35
S 50 1	**P80**	219.5	19	16.3	5	200	165	130	—	M10x14.5	314	4	37
S 50 1	**P90**	219.5	24	21.8	6	200	165	130	—	M10x14.5	334	4	37
S 50 1	**P100**	204.5	28	27.3	8	250	215	180	—	M12x16	344	4.5	41
S 50 1	**P112**	204.5	28	31.3	8	250	215	180	—	M12x16	344	4.5	41
S 50 1	**P132**	204.5	38	41.3	10	300	265	230	16	14	380	5	44
S 50 1	**P160**	—	42	45.3	12	350	300	250	23	18	431	5.5	48
S 50 1	**P180**	—	48	51.8	14	350	300	250	23	18	431	5.5	48

S 50...HS

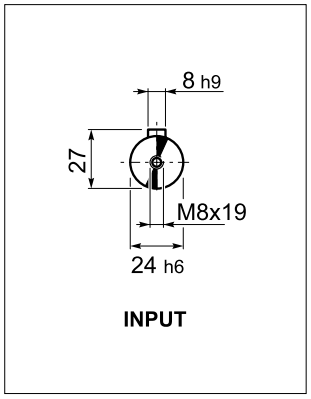

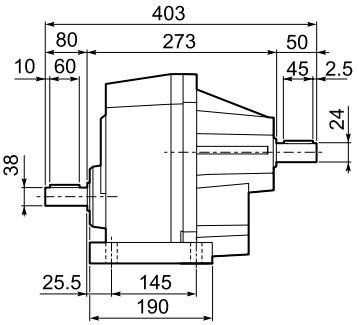

P

Kg	36

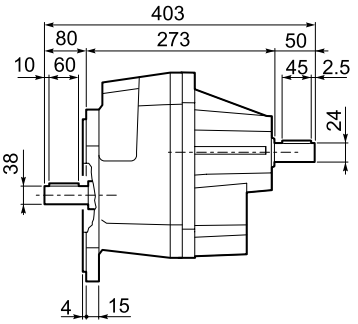

F

Kg	39

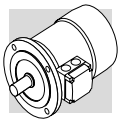

ELECTRIC MOTORS

M1 SYMBOLS AND UNITS OF MEASUREMENT

Symbols	Units of Measure	Description
$\cos\varphi$	–	Power factor
η	–	Efficiency
f_m	–	Power adjusting factor
I	–	Cyclic duration factor
I_N	[A]	Rated current
I_S	[A]	Locked rotor current
J_C	[Kgm^2] [lb•ft^2]	Load moment of inertia
J_M	[Kgm^2] [lb•ft^2]	Moment of inertia
K_c	–	Torque factor
K_d	–	Load factor
K_J	–	Inertia factor
M_A	[Nm] [lb•in]	Mean breakaway torque
M_B	[Nm] [lb•in]	Brake torque
M_N	[Nm] [lb•in]	Rated torque
M_L	[Nm] [lb•in]	Counter-torque during acceleration
M_S	[Nm] [lb•in]	Starting torque

Symbols	Units of Measure	Description
n	[min^{-1}] [rpm]	Rated speed
P_B	[W]	Power drawn by the brake at 20°C [68°F]
P_n	[kW] [hp]	Motor rated power
P_r	[kW] [hp]	Required power
t_1	[ms]	Brake response time with one-way rectifier
t_{1s}	[ms]	Brake response time with electronic-controlled rectifier
t_2	[ms]	Brake reaction time with a.c. disconnect
t_{2c}	[ms]	Brake reaction time with a.c. and d.c. disconnect
t_a	[°C] [°F]	Ambient temperature
t_f	[min]	Work time at constant load
t_r	[min]	Rest time
W	[J] [lb•ft]	Braking work between service interval
W_{max}	[J] [lb•ft]	Maximum brake work for each braking
Z	[1/h]	Permissible starting frequency, loaded
Z_0	[1/h]	Max. permissible unloaded starting frequency (I = 50%)

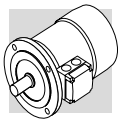

M2 INTRODUCTION

To harmonize efficiency classifications for motors manufactured and sold in the global market, the International Electrotechnical Commission (IEC) introduced Standard IEC 60034-30:2008, which was updated in 2014 and is now referred to as IEC 60034-30-1:2014, “Rotating electrical machines – Part 30-1: Efficiency classes of line operated AC motors.”In addition to defining efficiency classes for electric motors, the IEC has also developed a standard that specifies how to determine motor efficiencies and losses based on established testing methods. This standard, IEC 60034-2-1 : 2024, ensures an international common base for electric motor designing and classification, as well as for national legislative activities and provides the basis for defining the efficiency classes in IEC 60034-30-1.
Both standards were developed in conjunction with the National Electrical Manufacturers Association (NEMA), the Japan Electrical Manufacturers Association (JEMA), and the European Committee of Manufacturers of Electrical Machines and Power Electronics (CEMEP).
In 2017, the IEC published a new standard dealing with the energy efficiency of AC drives and drive-motor systems:
IEC 61800-9 “Ecodesign for power drive systems, motor starters, power electronics and their driven applications”. The standard IEC 61800-9 is harmonized in Europe as EN 61800-9 and replaces the earlier standard EN 50598 (-1 and -2).
The European Regulation 2019/1781, fully implemented since July 2023, defines for the first time legally binding energy efficiency standards for frequency inverters.

The following table shows the correspondence among the main classes.

Global efficiency classes

IEC 60034-30-1	IE1	IE2	IE3	IE4	IE5
NEMA MG-1	STANDARD	HIGH	PREMIUM	SUPER PREMIUM	
GB 18613		GRADE 4	GRADE 3	GRADE 2	GRADE 1
NBR 17094-1		IR2	IR3		
AS/NZS 1359,5	IE1	IE2	IE3		
IS 12615	IE1	IE2	IE3	IE4	
SASO 2893	IE1	IE2	IE3	IE4	
KS C IEC 60034	IE1	IE2	IE3	IE4	
JIS C 4034-30	IE1	IE2	IE3	IE4	

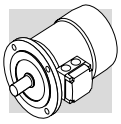

History of energy efficiency standards
IEC 60034-2-1: 2007: harmonizes the procedures for the measurement of efficiencies.
IEC 60034-30: 2008: specifies efficiency classes and forms the basis for the various national efficiency requirements.
IEC 60034-2-1: 2014: is intended to establish methods of determining efficiencies from tests, and to specify methods of obtaining specific losses.
IEC 60034-30-1: 2014: takes a step further in widening the scope of motors subject to efficiency classes and introduces the IE4 class. VSD-driven motors are out of the scope of this standard and will be dealt with in a standard of its own.
IEC TS 60034-30-2: 2016: Rotating electrical machines - Part 30-2: Efficiency classes of variable speed AC motors (IE-code)
IEC 60034-2-3 : 2020: Rotating electrical machines - Part 2-3: Specific test methods for determining losses and efficiency of converter-fed AC motors.
IEC 60034-2-1: 2024: Updates the standard methods for determining losses and efficiency from tests, introducing refined procedures to ensure higher measurement accuracy.

The IE classes are shown in the following table:

Class type	**Class number**
Standard efficiency	IE1
High efficiency	IE2
Premium efficiency	IE3
Super premium efficiency	IE4

IEC 61800-9:2017 introduced the extended product approach, which allows us to determine the efficiency of drive + motor + driven equipment (i.e. a pump) under defined load-time profile.
The regulation defines efficiency classes for AC drives and motor-drive systems (Power Drive Systems in the standard).
For AC drives, the standard defines three classes: IE0, IE1 and IE2.
For motor-drive systems, there are again three classes: IES0, IES1 and IES2. The ‘S’ after ‘IE’ stands for ‘system’.
European Regulation 2019/1781: New regulations for the European market for induction motors and electronic motors controls such as frequency inverters.

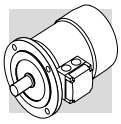

M3 GENERAL CHARACTERISTICS

M3.1 Production range

The asynchronous three-phase electric motors of BONFIGLIOLI, are available in basic design IMB5 and derived versions, with the following polarities: 2, 4, 6 at 50Hz and 60Hz.
Motors are provided as totally enclosed fan cooled (TEFC) for use in industrial environments.
Standard versions of BX-BE/MX-ME motors are 230/400V Δ/Y (400/690V Δ/Y in sizes BX-BE 160 and BX-BE 180), 50 Hz motors. Standard BN/M motors are designed to operate from a rated voltage 230/400V Δ/Y (400/690V Δ/Y for frame sizes BN 160 through BN 200) 50 Hz.
On the BXN/MXN motors, it is present a terminal box with 9 PIN connection + 12 wires winding that makes it easy to obtain the right voltage for most countries as standard. The Standard versions is identified as WD1 and makes it possible to obtain the following voltages/frequency (115/200/230/400V-50Hz and 132/230/265/460V-60Hz). For the BXN/MXN motors the voltage tolerance is ±5%.

M3.2 Standards

The motors described in this catalogue are manufactured to the applicable standards shown in the following table.

(F01)

Title	CEI	IEC
General requirements for rotating electrical machines	**CEI EN 60034-1**	**IEC 60034-1**
Terminal markings and direction of rotation of rotating machines	**CEI 2-8**	**IEC 60034-8**
Methods of cooling for electrical machines	**CEI EN 60034-6**	**IEC 60034-6**
Dimensions and output ratings for rotating electrical machines	**EN 50347**	**IEC 60072**
Classification of degree of protection provided by enclosures for rotating machines	**CEI EN 60034-5**	**IEC 60034-5**
Noise limits	**CEI EN 60034-9**	**IEC 60034-9**
Classification of type of construction and mounting arrangements	**CEI EN 60034-7**	**IEC 60034-7**
Rated voltage for low voltage mains power	**CEI 8-6**	**IEC 60038**
Vibration level of electric machines	**CEI EN 60034-14**	**IEC 60034-14**
Efficiency classes of single-speed, three-phase, cage-induction motors (IE code)	**CEI EN 60034-30-1**	**IEC 60034-30-1**
Standard method for determining losses and efficiency from tests	**CEI EN 60034-2-1**	**IEC 60034-2-1**

The motors also comply with foreign standards adapted to IEC 60034-1 as shown here below.

(F02)

NEMA MG1	USA
DIN VDE 0530	Germany
BS5000 / BS4999	Great Britain
AS 1359	Australia
NBNC 51 - 101	Belgium
NEK - IEC 34	Norway
NF C 51	France
OEVE M 10	Austria
SEV 3009	Switzerland
NEN 3173	Netherlands
SS 426 01 01	Sweden

M3.3 Directives 2006/95/EC (LVD) and 2004/108/EC (EMC)

Bonfiglioli motors meet the requirements of Directives 2014/35/UE (LVD - Low Voltage Directive), the 2014/30/UE (EMC - Electromagnetic Compatibility Directive), the 2009/125/CE (ERP - Energy Related Products Directive) and 2011/65/UE (RoHS – Restriction of Hazardous Substances) and their nameplates bear the CE mark.
As for the EMC Directive, construction is in accordance with standards CEI EN 60034-1 (Rotating electrical machines Part 1: Rating and performance), CEI EN 61000-6-2 (Generic standards - Immunity for industrial environments), CEI EN 61000-6-4 (Generic standards - Emission standard for industrial environments).
Motors with FD brakes, when fitted with the suitable capacitive filter at rectifier input (option CF), meet the emission limits required by Standards CEI EN 61000-6-3 and CEI EN 60204-1.
The responsibility for final product safety and compliance with applicable directives rests with the manufacturer or the assembler who incorporate the motors as component parts.

UKCA mark as standard

In UK, the CE mark will be replaced by the UKCA (United Kingdom Conformity Assessed mark) mark, due to Brexit, starting from 1st January 2022. All Bonfiglioli motors are already compliant with UKCA requirements.

M3.4 EU Directive 2012/19/EU - Information on disposal

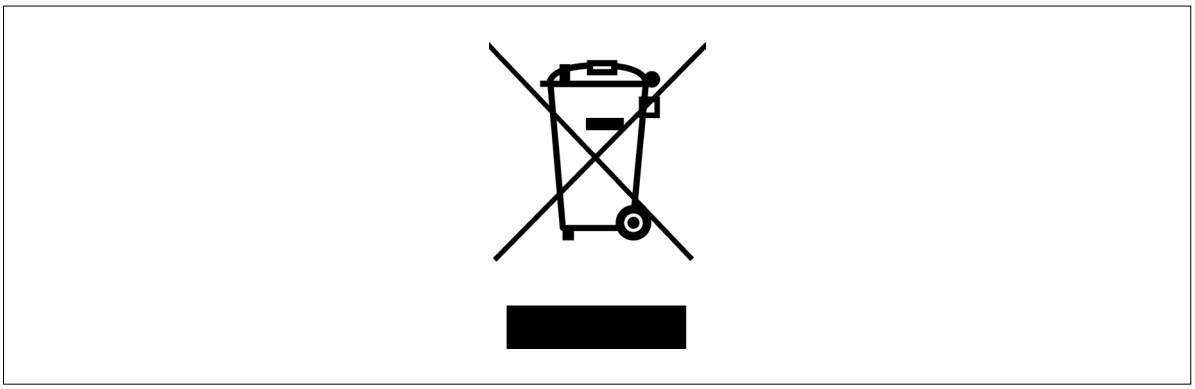

This product should not be mixed with general household waste. Disposal has to be carried out in conformity with EU Directive 2012/19/EU where established, and in accordance to national regulations.
Fulfill disposal in accordance with any other legislation in force throughout the country.

M3.5 Tolerances

As per the Norms CEI EN 60034-1, applicable the tolerances here below apply to the following quantities.

(F03)

-0.15 (1 - η) P ≤ 150 kW [75 hp] -0.10 (1 - η) P > 150 kW [75 hp]	Efficiency
-(1 - cosφ)/6 min 0.02 max 0.07	Power factor
±20% *	Slip
+20%	Locked rotor current
-15% +25%	Locked rotor torque
-10%	Max. torque

(*) ± 30% for motors with Pn < 1 kW [0.75 hp]

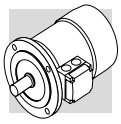

M4 MOTOR DESIGNATION

MOTOR

BXN 80MB 4 WD1 60 IP55 CLF B5 **W** IC0 MFC .....

FAN COVER MATERIAL
MFC Metal fan cover

CABLE ENTRY POSITION
Terminal box size S
IC0 (Standard), **IC1**
Terminal box size L
IC0 (Standard), **IC1**, **IC2**

TERMINAL BOX POSITION (1)
W (default), **N**, **E**, **S**

MOTOR MOUNTING
- compact motor
IM B5 - IEC motor

INSULATION CLASS
CL F standard
CL H option

DEGREE OF PROTECTION
IP55 standard
IP56 option

VOLTAGE - FREQUENCY
(See Paragraph M7.1)

POLE NUMBER
4

MOTOR SIZE
63MA ... 132M (IEC motor)
05MA...20MB (Compact motor)

MOTOR TYPE
BXN = IEC 3-phase, class IE3 **MXN** = compact 3-phase, class IE3

(1) Compact motor only

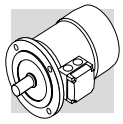

BRAKE

..... **FDD** 15 NR SA 400 R AA MRM

BRAKE MONITORING DEVICE
- (Standard), **MRM**, **MWM**

BRAKE HAND RELEASE LEVER POSITION

BRAKE HAND RELEASE LEVER
- (Standard), **R**

BRAKE SUPPLY

SEPARATE BRAKE SUPPLY
SD, SA

AC/DC TYPE RECTIFIER
NR, SR

BRAKE TORQUE

BRAKE TYPE
- (Standard), **FDD**

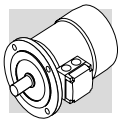

MOTOR

BY 280MAK 4 400/690-50 IP55 CLF B5 .....

OPTIONS

MOTOR MOUNTING
IM B5 - IEC motor

INSULATION CLASS
CL F standard
CL H option

DEGREE OF PROTECTION
IP55, IP56 standard

VOLTAGE - FREQUENCY
400/690-50

POLE NUMBER
4

MOTOR SIZE
280SCK ... 355SAK (IEC motor)

MOTOR TYPE
BY = IEC 3-phase, class IE4

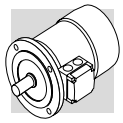

MOTOR | BRAKE

BX 132SB 4 230/400-50 IP55 CLF B5 **W** **FD** 7.5 R AA SB 220 SA .....

OPTIONS

BRAKE SUPPLY

RECTIFIER TYPE
AC/DC
NB, **SB, NBR, SBR**

RELEASE LEVER ORIENTATION
AA, AB (standard)**, AC, AD**

BRAKE HAND RELEASE
R, RM

BRAKE TORQUE

BRAKE TYPE
FD (d.c. brake)

TERMINAL BOX POSITION
(compact motor only)
W (default), **N**, **E**, **S**

MOTOR MOUNTING
− compact motor
IM B5 - IEC motor

INSULATION CLASS
CL F standard
CL H option

DEGREE OF PROTECTION
IP55 standard (IP56 - option)
IP54, **IP55** brake motor

VOLTAGE - FREQUENCY
(See Paragraph M7.1)

POLE NUMBER
4

MOTOR SIZE
63A ... 355 (IEC motor)
05A ... 5LA (compact motor)

MOTOR TYPE
BX = IEC 3-phase, class IE3 **MX** = compact 3-phase, class IE3

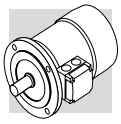

MOTOR | BRAKE

BE 90LA 4 230/400-50 IP55 CLF B5 **W** **FD** 7.5 R AA SB 220 SA .....

OPTIONS

BRAKE SUPPLY

RECTIFIER TYPE
AC/DC
NB, **SB, NBR, SBR**

RELEASE LEVER ORIENTATION
AA, AB (standard)**, AC, AD**

BRAKE HAND RELEASE
R, RM

BRAKE TORQUE

BRAKE TYPE
FD (d.c. brake)

TERMINAL BOX POSITION
(compact motor only)
W (default), **N**, **E**, **S**

MOTOR MOUNTING
− compact motor
IM B5 - IEC motor

INSULATION CLASS
CL F standard
CL H option

DEGREE OF PROTECTION
IP55 standard (IP56 - option)
IP54, **IP55** brake motor

VOLTAGE - FREQUENCY
(See Paragraph M7.1)

POLE NUMBER
2, **4**, **6**

MOTOR SIZE
63A ... 180L (IEC motor)
05A ... 5L (compact motor)

MOTOR TYPE
BE = IEC 3-phase, class IE2 **ME** = compact 3-phase, class IE2

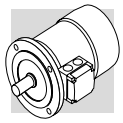

MOTOR BRAKE

BN 90LA 4 230/400-50 IP55 CLF B5 **W** **FD** 7.5 R AA SB 220 SA .....

OPTIONS

BRAKE SUPPLY

RECTIFIER TYPE
AC/DC
NB, **SB, NBR, SBR**

RELEASE LEVER ORIENTATION
AA, AB (standard)**, AC, AD**

BRAKE HAND RELEASE
R, RM

BRAKE TORQUE

BRAKE TYPE
FD (d.c. brake)

TERMINAL BOX POSITION
(compact motor only)
W (default), **N**, **E**, **S**

MOTOR MOUNTING
− compact motor
IM B5 - IEC motor

INSULATION CLASS
CL F standard
CL H option

DEGREE OF PROTECTION
IP55 standard (IP56 - option)
IP54, **IP55** brake motor

VOLTAGE - FREQUENCY
(See Paragraph M7.1)

POLE NUMBER
2, **4**, **6**

MOTOR SIZE
56A ... 200LA (IEC motor)
0B ... 5SB (compact motor)

MOTOR TYPE
BN = IEC 3-phase **M** = IEC compact 3-phase

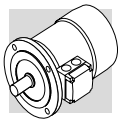

M5 VARIANTS AND OPTIONS

M5.1 Variants

(F04)

Category	Description	Default	Option
Voltage	(BN - BE - BX) ≤ 132	230/400/50	…
	(BN - BE - BX) ≥ 160 / (BY) ≥ 280	400/690/50	
	(BXN)	WD1	
Insulation class	All motor series	CLF	CLH
Design version	BX - BE - BN	B5	B5R
	BXN	B5	-

Default values. * See EVOX specific catalogue

M5.2 Options

(F05)

Description	Catalogue numbers								Availability
Thermal protective devices	D3	K1	E3	PT1000°°	PT100*				BY-BXN-BX-BE-BN-MXN-MX-ME-M
50 Hz normalized power	PN								BN - M
Feedback devices	EN1	EN2	EN3	EN4	EN5	EN6	EN7*	EN8*	BY-BXN-BX-BE-BN-MXN-MX-ME - M
Anti-condensate heaters	H1	NH1							BY-BXN-BX-BE-BN-MXN-MX-ME - M
Tropicalized windings	TP								BY-BXN-BX-BE-BN-MXN-MX-ME - M
Double-extended shaft	PS								BY-BXN-BX-BE-BN-MXN-MX-ME - M
Rotor balancing grade B	RV								BY - BX - BE - BN - MX - ME - M
External mechanical protections	RC	TC****	EC°°						BY-BXN-BX-BE-BN-MXN-MX-ME - M
Forced ventilation	U1	U2**							BY - BX - BE - BN - MX - ME - M
Insulated Bearings	IB*								BY - BX
Certification UL	CUS°								BXN- BX - BE - BN - MXN- MX - ME - M
Bureau of Indian Standard Certification	BIS								BXN - BX - BE - MX - ME
China Compulsory Certification	CCC								BN - M
China Energy Label	CEL								BX - MX
Global motor	CN								BXN - MXN
NBR Certification	NBR								BX - MX
EECA Ceertification	EECA								BX
Plug connector	CON****								BX - BE - BN MX - ME - M
Surface protection	C_								BY-BXN-BX-BE-BN-MXN-MX-ME - M
Painting	RAL								BY-BXN-BX-BE-BN-MXN-MX-ME - M
Certificates	ACM****								BXN- BX - BE - BN - MXN- MX - ME - M
Inspection certificate	CC								BY-BXN-BX-BE-BN-MXN-MX-ME - M
Vertical Mounting	VM*								BY - BX
Backstop device	AL	AR							MX - ME - M
Type of duty	S2	S3							BN - M
	S2-10	S2-30	S2-60	S3=25%	S3=40%		S3=70%		BXN - MXN

* BX >=200 and BY >= 280 ** Only for motors BN *** Not for motors BX - MX

° Standard on BXN/MXN not an option °° Only for motors BXN/MXN **** Only for BN-BE and BX<=180

M5.3 Brake-related options

(F06)

Description	Catalogue numbers				Availability
Brake torque	Refer to the specific brake type				
Manual release lever	R	RM°			BXN - BX - BE - BN MXN - MX - ME - M
Release lever orientation	AB	AA	AC	AD	BXN - BX - BE - BN MXN - MX - ME - M
DC brake rectifier	NB	NBR	SB	SBR	BX - BE - BN MX - ME - M
	NR	SR			BXN MXN
Soft-start flywheel	F1				BE - BN ME - M
Capacitive filter	CF				BX - BE - BN MX - ME - M
Brake separate power supply (*)	...SA	...SD			BXN - BX - BE - BN MXN - MX - ME - M
Brake functionality check	MSW				BX - BE - BN MX - ME - M
	MRM	MWM			BXN MXN
Additional cable entry for brake motors	IC				BN M

(*) Specify voltage. (°) Not for BXN/MXN

Default values.

M5.4 Example of identification nameplate for legacy motors (BX - BE - BN)

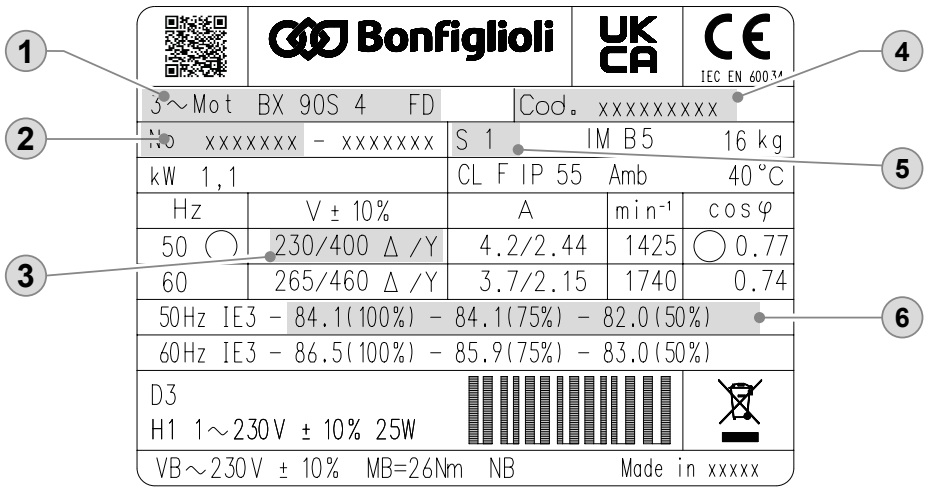

① BONFIGLIOLI Motor type
② Serial number
③ Rated voltage
④ Motor code
⑤ Type of duty: S1 Continuous duty
⑥ IE Class, Efficiency at: 4/4 - 3/4 - 2/4 load

M5.4.1 Example of identification nameplate for EVOX motors (BXN)

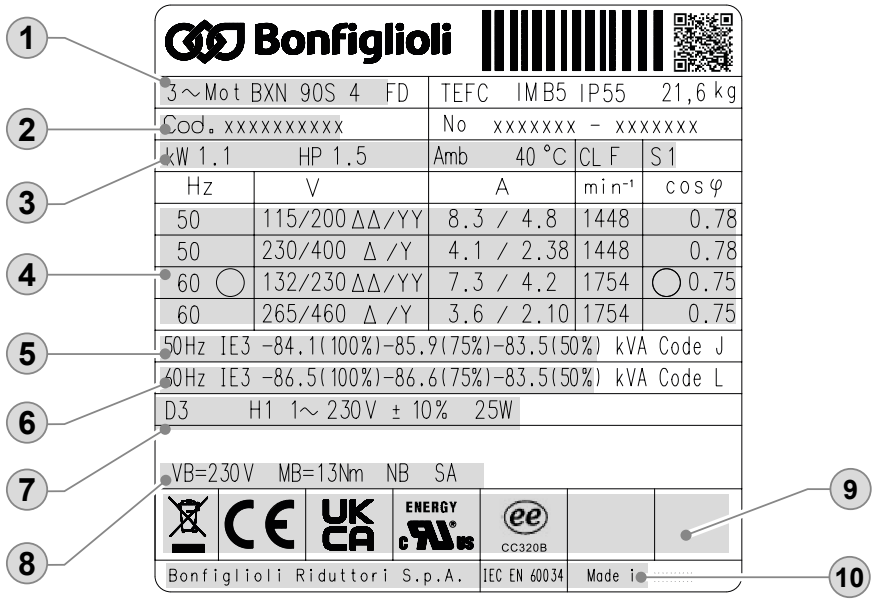

① Motor designation and general information
② Serial codes
③ Environment & application compliancy
④ Rated performances function of voltages/frequencies
⑤ Motor performances @ 50 Hz
⑥ Motor performances @ 60 Hz
⑦ Thermal protection and Servo ventilation information
⑧ Brake information
⑨ Certifications
⑩ Manufactory information

M6 MECHANICAL FEATURES

M6.1 Versions

EC-normalised BXN, BX, BE and BN motors are available in the design versions as indicated in the table below here after as per Standards EN 60034-7 (BX/BE), CEI EN 60034-14 (BN).

Mounting versions are:
IM B5 (basic)
IM V1, IM V3 (derived)

IM B5 design motors can be installed in positions IM V1 and IM V3; in such cases, the basic design IM B5 is indicated on the motor name plate.
In design versions with a vertically located motor and shaft downwards, it is recommended to request the drip cover (always necessary for brake motors). This facility, included in the option list should be specified when ordering as it does not come as a standard device

(F07)

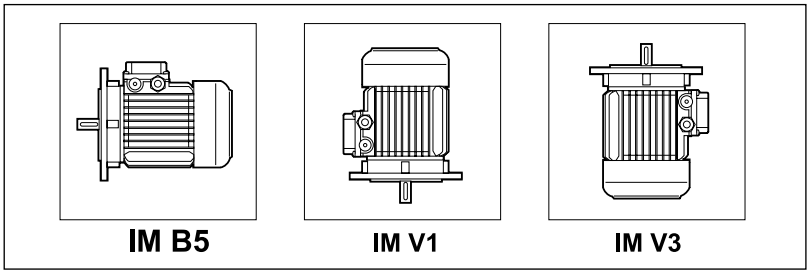

For Motor BX≥200K and BY≥280K it is necessary to select VM options when vertically mounted.

If the motor will be mounted with DE facing downwards, selection of RC option is recommended. This has to be specified during the ordering phase because not present in standard motor version.

Flange output motors are also available with reduced coupling dimensions, as indicated in the table below - executions **B5R**. Their use in combination with gearboxes must be however coherent with the maximum installable power on gearboxes themselves (see chapters “Motors availability”). In case this condition is not met need to contact the Technical Service for the checking of the combination.

(F08)

		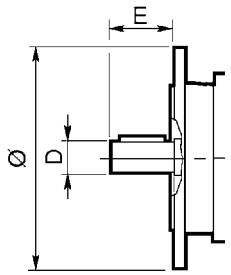					
		BX/BE/BN 71	**BX/BE/BN 80**	**BX/BE/BN 90**	**BX/BE/BN 100**	**BX/BE/BN 112**	**BX/BE/BN 132**
		DxE - Ø					
B5R(1)	[mm]	11x23 - 140	14x30 - 160	19x40 - 200	24x50 - 200	24x50 - 200	28x60 - 250
	[in]	0.433x0.905 - 5.511	0.551x1.181 - 6.299	0.748x1.574 - 7.874	0.944x1.968 - 7.874	0.944x1.968 - 7.874	1.102x2.362 - 9.842

(1) flange with through holes

M6.2 Degree of protection

IP..

The following chart provides an overview of the degrees of protection available.
In addition to the degree of protection specified when ordering, motors to be installed outdoors require protection against direct sunlight and also – when they are to be installed vertically down – a drip cover to prevent the ingress of water and solid particles (option RC).

(F09)

		IP 54	IP 55	IP 56
BY…K - BX…K - BX - BE - BN	**MX - ME - M**	⛔	standard	option
BXN	**MXN**	⛔	standard	option
BXN_FDD	**MXN_FDD**	⛔	standard	option
BX_FD - BE_FD - BN_FD	**MX_FD - ME_FD - M_FD**	standard	option	⛔
200 ≤ **BX… K_FD** < 280	**-**	⛔	standard	⛔
BX…K_FD ≥ 280	**-**	⛔	standard	option

(*) BX ≤ 180_FD

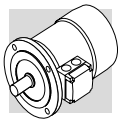

IP	5	5

0		Not protected
1		Protected against extraneous solid bodies having Ø ≥ 50 mm [2 in]
2		Protected against extraneous solid bodies having Ø ≥ 12.5 mm [0.5 in]
3		Protected against extraneous solid bodies having Ø ≥ 2.5 mm [0.1 in]
4		Protected against extraneous solid bodies having Ø ≥ 1.0 mm [0.04 in]
5		Protected against dust
6		No dust ingress

0		Not protected
1		Protected against vertical water drips
2		Protected against vertical water drips inclined up to 15°
3	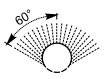	Protected against rain
4		Protected against water splashes
5	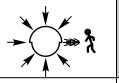	Protected against jets of water
6	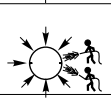	Protected against powerful jets of water
7	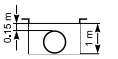	Protected against the effects of temporary immersion
8	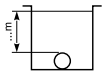	Protected against the effects of continuous immersion

M6.3 Cooling

The motors are externally ventilated (IC 411 to CEI EN 60034-6) and are equipped with a plastic fan working in both directions.
The motors must be installed allowing sufficient space between fan cowl and the nearest wall to ensure free air intake and allow access for maintenance purposes on motor and brake, if supplied.
Independent, forced air ventilation (IC 416) can be supplied on request (option U1).
This solution enables to increase the motor duty factor when driven by an inverter and operating at reduced speed.

M6.4 Direction of rotation

Rotation is possible in both directions. If terminals U1, V1 and W1 are connected to line phases L1,L2 and L3, clockwise rotation (looking from drive end) is obtained. For counterclockwise rotation, switch two phases.

M6.5 Noise

Noise levels, measured using the method prescribed by ISO 1680 Standards, are within the maximum levels specified by Standards CEI EN 60034-9.

M6.6 Vibrations and balancing

Rotor shafts are balanced with half key fitted and fall within the vibration class N, as per Standard CEI EN 60034-14.

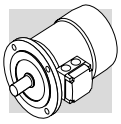

M6.7 Terminal box

Legacy motors (BN/M - BE/ME - BX/MX) terminal board features 6 studs for eyelet terminal connection while EVOX BXN and MXN motors have always 9 studs as standard.
When a legacy motor have UL option active the terminal board features 9 studs execution (for US voltage “Dual Voltage”). A ground terminal is also supplied for earthing of the equipment. Terminals number and type are shown in the following table. For brake power supply, please read par. M9 (brake FD). Brakemotors house the a.c./d.c. rectifier (factory pre-wired) inside the terminal box. Wiring instructions are provided either in the box or in the user manual.

(F10)

		No. of terminals	Terminal threads
BXN 63 ... BXN 132	**MXN05 ... MXN40**	9	M4
BX 63 ... BX 90 **BE 63 ... BE 90** **BN 56 ... BN 90**	**MX05 ... MX2** **ME05 ... ME2** **M05 ... M2**	6	M4
BX 100 ... BX 132 **BE 100 ... BE 132** **BN 100 ... BN 160MR**	**MX3, MX4** **ME3, ME4** **M3 ... M4**	6	M5
BX 160 - BE 160 ... BE 180M **BN 160M ... BN 180M**	**ME5** **MX5 - M5**	6	M6
BX 180 - BE 180L **BN 180L ... BN 200L**	**-** **-**	6	M8
BX 200K ... BX 250K	**-**	6	M10
BY 280K ... BY 355K **BX 280K ... BX 355K**	**-** **-**	6	M12
BX 80 ... BX 132 **BE 63 ... BE 132** **BN 63 ... BN 160MR**	**MX2 ... MX4** **ME05 ... ME4** **M05 ... M4**	9	M4
BX 160 ... BX 180 **BE 160 ... BE 180** **BN 160M ... BN 200L**	**MX5** **ME5** **M5**	9	M6

M6.8 Cable entry

The holes used to bring cables to terminal boxes use metric threads in accordance with standard EN 50262 as indicated in the table here after.

(F11)

		Terminal Box - Small "S"		Terminal Box - Standard "L"		Maximum cable diameter allowed	
		Cable gland and dimensions	Position	Cable gland and dimensions	Position	[mm]	[inch]
BXN 63 ... BXN 112	**MXN 05 ... MXN 35** **MNN 05 ... MNN 10**	2 x M25 x 1.5	1 + 1 hole on each side	2 x M25 x 1.5	1 + 1 hole on each side	17	0.669
		2 x M16 x 1.5		2 x M16 x 1.5		10	0.394
		-	-	1 x M16 x 1.5	1 hole in the back	10	0.394
BXN 132	**MXN 40**	-	-	2 x M32 x 1.5	1 + 1 hole on each side	21	0.827
		-	-	2 x M16 x 1.5		10	0.394
		-	-	1 x M16 x 1.5	1 hole in the back	10	0.394

		Cable gland and dimensions	Position	Maximum cable diameter allowed [mm]	[inch]
BX 63 - BE 63 - BN 63	**MX05 - ME05 - M05**	2 x M20 x 1.5	1 Hole on each side	13	0.512
BN71 ... BN90, BE71 ... BE90, BX71 ... BX90	**M1 - M2, ME1 - ME2, MX1 - MX2**	2 x M25 x 1.5		17	0.669
BN100 - BN112, BE100 - BE112, BX100 - BX112	**MX3, MX4 - ME3 M3**	2 x M32 x 1.5	2 Holes on each side	21	0.827
		2 x M25 x 1.5		17	0.669
BN132 ... BN160MR, BE132, BX132	**M4, ME4, MX4**	4 x M32 x 1.5		21	0.827
BXN 132	**MXN 40**	2 x M32 x 1.5	1+1 Hole on each side	21	0.827
		2 x M16 x 1.5		10	0.394
		1 x M16 x 1.5	1 Hole in the back	10	0.394
BN160M ... BN200L, BE160 - BE180, BX160 - BX180	**M5, ME5, MX5**	2 x M40 x 1.5	Pivoting, 4 x 90°	28	1.102
		2 x M20 x 1.5		13	0.512
BY 280K ... BY 355K **BX 200K ... BX 355K**	**-**	2 x M63 x 1.5	Pivoting, 4 x 90°	45	1.770

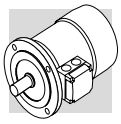

IC0

Cable entry position

This option allows the direction of cable entry into the terminal box to be selected.
In specific configurations, it enables the use of the optimised terminal box (size S) for IEC frame sizes 63, 71, 80, 90, 100 and 112, and for compact sizes 05, 10, 20, 25, 30 and 35.
If this option is not defined in the configurator, the standard terminal box design (size L) will remain unchanged.

Terminal box type

The following table shows the relationship between the “Cable entry position” option, the presence of a brake, and the motor size.

Cable entry position		[IC0] , [IC1] , [IC2]	
IEC motor size	Compact motor size	Without brake	With brake
63-71-80	05-10-20	S	L
90-100-112	25-30-35	S	L
132	40	L	L

To illustrate the logic behind the new product variants, the following examples show how the product designation changes according to the terminal box size and the available cable entry options.

Size S
Cable entry option = **[IC0], [IC1]**

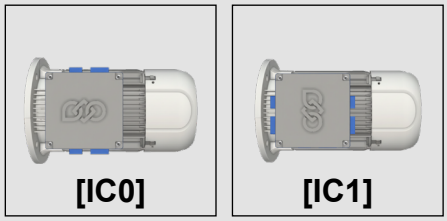

Size L
Cable entry option = **[IC0], [IC1], [IC2]**

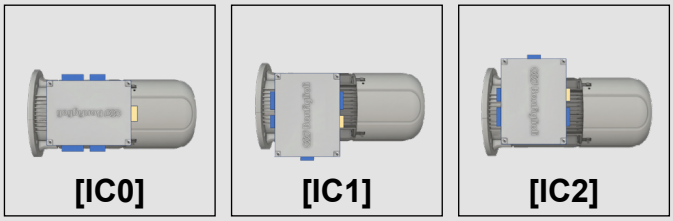

Fan cover material

Specifies the motor fan cover material. It is essential to ensure durability and compliance across various sectors.

MFC

Metal fan cover

Specifies the motor metal sheet fan cover material, offering a heavy-duty metallic alternative to the standard plastic version to meet specific industrial requirements.
It is essential to ensure durability and compliance in demanding sectors such as metalworking (impact and spark resistance), the food industry (metal particles detection on conveyors), cold environment, etc..
Starting from motor with brake size 90 ahead, the metal fan cover is provided as standard, while for smaller sizes it is mandatory when specific options like encoders, RAL painting and double shaft are selected.

Fan cover material					
IEC motor size	Compact motor size	Without brake		With brake	
		standard	option	standard	option
63	05	Plastic	Metal	Plastic	Metal
71	10	Plastic	Metal	Plastic	Metal
80	20	Plastic	Metal	Plastic	Metal
90	25	Plastic	Metal	Metal	-
100	30	Metal	-	Metal	-
112	35	Metal	-	Metal	-
132	40	Metal	-	Metal	-

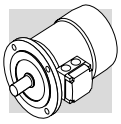

M6.9 Bearings

Life lubricated preloaded radial ball bearings are used, types are shown in the chart here under.
Calculated endurance lifetime L10h, as per ISO 281, in unloaded condition, exceeds 40000 hrs.
DE = drive end
NDE = non drive end

(F12)

IEC (IE1-IE2)	DE	NDE	
		Without Brake	With Brake
BN 56	6201 2Z C3	6201 2Z C3	–
BE 63 BN 63	6201 2Z C3	6201 2Z C3	6201 2RS C3
BE 71 BN 71	6202 2Z C3	6202 2Z C3	6202 2RS C3
BE 80 - BN 80	6204 2Z C3	6204 2Z C3	6204 2RS C3
BE 90 - BN 90	6205 2Z C3	6205 2Z C3	6305 2RS C3
BE 100 - BN 100	6206 2Z C3	6206 2Z C3	6206 2RS C3
BE 112 - BN 112	6306 2Z C3	6306 2Z C3	6306 2RS C3
BE 132 - BN 132	6308 2Z C3	6308 2Z C3	6308 2RS C3
BN 160MR	6309 2Z C3	6308 2Z C3	6308 2RS C3
BE 160M/L - BN 160M/L	6309 2Z C3	6309 2Z C3	6309 2RS C3
BN 180M	6310 2Z C3	6309 2Z C3	6309 2RS C3
BE 180M/L - BN 180L	6310 2Z C3	6310 2Z C3	6310 2RS C3
BN 200L	6312 2Z C3	6310 2Z C3	6310 2RS C3

IEC (IE3)	DE	NDE	
		Without Brake	With Brake
BXN 63 - BX 63	6201 2Z C3	6201 2Z C3	6201 2Z C3
BXN 71 - BX 71	6202 2Z C3	6202 2Z C3	6202 2Z C3
BXN 80 - BX 80	6204 2Z C3	6204 2Z C3	6204 2Z C3
BXN 90 - BX 90	6205 2Z C3	6205 2Z C3	6205 2Z C3
BXN 100 - BX 100	6206 2Z C3	6206 2Z C3	6206 2Z C3
BXN 112 - BX 112	6306 2Z C3	6306 2Z C3	6306 2Z C3
BXN 132 - BX 132	6308 2Z C3	6308 2Z C3	6308 2Z C3
BX 160M/L	6309 2Z C3	6309 2Z C3	6309 2Z C3
BX 180M/L	6310 2Z C3	6310 2Z C3	6310 2Z C3
BX 200K	6312/C3	6210/C3*	6310/C3
BX 225K	6313/C3*	6212/C3*	-
BX 250K	6315/C3*	6213/C3*	-
BY 280K - BX 280K	6316/C3*	6316/C3*	-
BY 315K - BX 315K	6319/C3**	6316/C3**	-
BY 355K - BX 355K	6322/C3**	6316/C3**	-

Compact (IE1-IE2) ACSF - W	DE*	NDE	
		Without Brake	With Brake
ME 05 - M 05	6004 2Z C3	6201 2Z C3	6201 2RS C3
ME 1 - M 1	6004 2Z C3	6202 2Z C3	6202 2RS C3
ME 2 - M 2	6007 2Z C3	6204 2Z C3	6204 2RS C3
ME 3 - M 3	6207 2Z C3	6206 2Z C3	6206 2RS C3
ME 4 - M 4	6309 2Z C3	6308 2Z C3	6308 2RS C3
ME 5 - M 5	6309 2Z C3	6309 2Z C3	6309 2RS C3

Compact (IE3) ACSF - W	DE	NDE	
		Without Brake	With Brake
MXN 05 - MX 05	6004 2Z C3	6201 2Z C3	6201 2Z C3
MXN 10 - MX 1	6004 2Z C3	6202 2Z C3	6202 2Z C3
MXN 20 - MX 2	6007 2Z C3	6204 2Z C3	6204 2Z C3
MX 3	6207 2Z C3	6206 2Z C3	6206 2Z C3
MX 4	6309 2Z C3	6308 2Z C3	6308 2Z C3
MX 5	6309 2Z C3	6309 2Z C3	6309 2Z C3

*Regreasable bearings with M6x1 Greasing Device
**Regreasable bearings with M10x1 Greasing Device
Note: Compact motors for W gearboxes are not equipped with a DE bearing

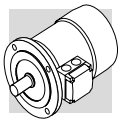

M7 ELECTRICAL CHARACTERISTICS

M7.1 Voltage

Single speed motors are provided in standard execution either for nominal voltage 230 / 400 V Δ/Y, 50 Hz, or 400 / 690 V Δ/Y, 50 Hz, with a voltage tolerance of ± 10%.
Note: Motor nominal voltage/frequency also depends on the selection of options related to energy certifications for specific markets. Table below, then, has to be intended only as a guideline, for more details on the available Voltages/Frequencies as a function of the selected certification, please refer to paragraph M7.5 - M7.10.

On all the motors, whose voltage / frequency configuration is not as indicated above, the voltage tolerance is ± 5%. For the operation out of the tolerance boundaries, the temperature may exceed by 10 K the limit provided by the adopted insulation class.
The motors are suitable for operation on distribution European grid with voltage complying with the pubblication IEC 60038.

(F13)

BN - M motor power supply voltages (IE1)

Single speed motors at 50Hz

Motor power supply voltage	— (CE)		CCC	CUS
	STD	FD		
220/380 - 50	✗	✓	✗	✓
230/400 - 50	✓	✓	✓	✓
240/415 - 50	✗	✓	✗	✓
290/500 - 50	✓	✓	✗	✓
380/660 - 50	✗	✓	✗	✓
400/690 - 50	✓	✓	✗	✓
415/720 - 50	✗	✓	✗	✓
500/865 - 50	✓	✓	✗	✓

Double speed motors at 50Hz

Motor power supply voltage	— (CE)	CCC	CUS
380 - 50	✓	✗	✓
400 - 50	✓	✓	✓
415 - 50	✓	✗	✓
500 - 50	✓	✗	✓

Single speed motors at 60Hz

Motor power supply voltage	— (CE)		CCC	CUS
	STD	FD		
208/360 - 60	✓	✓	✗	✓
220/380 - 60	✓	✓	✗	✓
230/400 - 60	✓	✓	✗	✓
255/440 - 60	✗	✓	✗	✓
265/460 - 60	✗	✓	✓	✓
280/480 - 60	✗	✓	✗	✓
330/575 - 60	✓	✓	✗	✓
380/660 - 60	✓	✓	✗	✓
400/690 - 60	✓	✓	✗	✓
440/760 - 60	✗	✓	✗	✓
460/800 - 60	✗	✓	✗	✓
480/830 - 60	✗	✓	✗	✓
575/995 - 60	✓	✓	✗	✓
220/440 - 60	✓	✓	✗	✓
230/460 - 60	✓	✓	✗	✓
240/480 - 60	✓	✓	✗	✓

Double speed motors at 60Hz

Motor power supply voltage	— (CE)	CUS
208 - 60	✓	✓
220 - 60	✓	✓
230 - 60	✓	✓
240 - 60	✓	✓
380 - 60	✓	✓
400 - 60	✓	✓
440 - 60	✓	✓
460 - 60	✓	✓
480 - 60	✓	✓
575 - 60	✓	✓

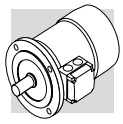

(F14)

BE - ME motor power supply voltages (IE2)			
Single speed motors at 50Hz			
Motor power supply voltage	**— (CE)**	**BIS**	**CUS**
220/380 - 50	✓	✓	✓
230/400 - 50	✓	✓	✓
240/415 - 50	✓	✓	✓
290/500 - 50	✓	✓	✓
380/660 - 50	✓	✓	✓
400/690 - 50	✓	✓	✓
415/720 - 50	✓	✓	✓
500/865 - 50	✓	✓	✓

Single speed motors at 60Hz			
Motor power supply voltage	**— (CE)**		**CUS**
	STD	**FD**	
208/360 - 60	✓	✓	✓
220/380 - 60	✓	✓	✓
230/400 - 60	✓	✓	✓
255/440 - 60	✓	✓	✓
265/460 - 60	✗	✓	✓
280/480 - 60	✓	✓	✓
330/575 - 60	✗	✓	✓
380/660 - 60	✓	✓	✓
400/690 - 60	✓	✓	✓
440/760 - 60	✓	✓	✓
460/800 - 60	✗	✓	✓
480/830 - 60	✓	✓	✓
575/995 - 60	✓	✓	✓
220/440 - 60	✓	✓	✓
230/460 - 60	✓	✓	✓
240/480 - 60	✓	✓	✓

BX - MX motor power supply voltages (IE3)						
Single speed motors at 50Hz						
Motor power supply voltage	**— (CE)**	**CCC**	**CEL**	**NBR**	**BIS**	**CUS**
230/400-50	✓ (1)	✗	✓ (6) (1)	✗	✓ (1)	✗
290/500-50	✓	✗	✗	✗	✗	✗
380/660-50	✗	✗	✓ (4)	✗	✗	✗
400/690-50	✓ (2)	✗	✓ (2) (3)	✗	✗	✗

Single speed motors at 60Hz					
Motor power supply voltage	**— (CE)**		**NBR (*)**	**CUS**	
	STD	**FD**			
220/380-60	✗	✗	✓ (3)	✗	
265/460-60	✗	✓ (1)	✗	✓ (1)	
330/575-60	✗	✓ (3)	✗	✓ (3)	
380/660-60	✗	✗	✓ (5)	✗	
440/760-60	✗	✗	✓ (4)	✗	
460/800-60	✗	✓ (2) (3)	✗	✓ (2) (3)	
220/440-60	✗	✗	✓ (3)	✗	
230/460-60	✗	✗	✗	✓ (3)	

(1) only for motor size ≤132
(2) only for motor size ≥160
(3) only for motor size ≤180
(4) only for motor size ≥200
(5) only for motor size 180
(6) only for motor size ≥100

Note: 50Hz without brake motors also have 60Hz data on the nameplate

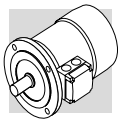

The table below shows the wiring options available.

(F15)

Number of poles			Winding connection
2	**BE 80 … BE 160, BN 63 … BN 200**	**ME2 ... ME5, M05 ... M5**	Δ / Y (²)
4	**BXN 63 ... BXN 132, BX 63 ... BX 180** **BX 200LAK ... BX 355MCK** **BY 280K ... BY 355K** **BE 63 … BE 180, BN 56 … BN 200**	**MXN05 ... MXN40, MX05 ... MX5** **—** **—** **ME05 ... ME5, M05 ... M5**	
6	**BE 90 … BE 160, BN 63 … BN 200**	**ME3 ... ME5, M05 ... M5**	

(²) Motors with voltage in ratio 2 (ex. 230/460 - 60) will be equipped with a 9 pin terminal box with winding connection either Δ Δ/ Δ or YY / Y (except 6 pole BN 63 Δ / Y)

NOTE: For BXN and MXN motors refer to EVOX specific catalogue

M7.2 Frequency

Rated output power BN / M for 60 Hz operation is shown in the following diagram.

(F16)

		2P		4P		6P	
		P_n [kW]	P_n [hp]	P_n [kW]	P_n [hp]	P_n [kW]	P_n [hp]
BN 27A	**-**	-	-	0.05	0.07	-	-
BN 27B	**-**	-	-	0.07	0.09	-	-
BN 27C	**-**	-	-	0.10	0.13	-	-
BN 44B	**-**	-	-	0.07	0.09	-	-
BN 44C	**-**	-	-	0.10	0.13	-	-
BN 56A	**-**	-	-	0.07	0.09	-	-
BN 56B	**M 0B**	-	-	0.10	0.13	-	-
BN 63A	**M 05A**	0.21	0.28	0.14	0.19	0.10	0.13
BN 63B	**M 05B**	0.30	0.40	0.21	0.28	0.14	0.19
BN 63C	**M 05C**	0.45	0.60	0.30	0.40	-	-
BN 71A	**-**	0.45	0.60	0.30	0.40	0.21	0.28
-	**M 1SC**	-	-	-	-	0.21	0.28
BN 71B	**M 1SD**	0.65	0.87	0.45	0.60	0.30	0.40
BN 71C	**M 1LA**	0.90	1.20	0.65	0.87	0.45	0.60
BN 80A	**-**	0.90	1.20	0.65	0.87	0.45	0.60
BN 80B	**M 2SA**	1.30	1.75	0.90	1.20	0.65	0.87
BN 80C	**M 2SB**	1.80	2.40	1.30	1.75	0.90	1.20
BN 90S	**-**	-	-	1.30	1.75	0.90	1.20
BN 90SA	**-**	1.80	2.40	-	-	-	-
BN 90SB	**-**	2.20	3.00	-	-	-	-
BN 90L	**-**	2.50	3.40	-	-	1.30	1.75
BN 90LA	**-**	-	-	1.80	2.40	-	-
BN 90LB	**-**	-	-	2.20	3.00	-	-

		2P		4P		6P	
		P_n [kW]	P_n [hp]	P_n [kW]	P_n [hp]	P_n [kW]	P_n [hp]
-	**M 3SA**	2.50	3.40	1.80	2.40	1.30	1.75
BN 100L	**M 3LA**	3.50	4.70	2.50	3.40	-	-
BN 100LA		-	-	-	-	1.80	2.40
BN 100LB	**M 3LB**	4.70	6.30	3.50	4.70	2.20	3.00
BN 100LC	**M 3LC**	-	-	4.70	6.30	-	-
-						2.50	3.40
BN 112M	**-**	4.70	6.30	4.70	6.30	2.50	3.40
BN 132S	**M 4SA**	-	-	6.50	8.70	3.50	4.70
BN 132SA		6.50	8.70	-	-	-	-
BN 132SB	**M 4SB**	8.70	11.70	-	-	-	-
BN 132M	**M 4LA**	11.00	15.00	-	-	-	-
BN 132MA		-	-	8.70	11.70	4.60	6.20
BN 132MB	**M 4LB**	-	-	11.00	15.00	6.50	8.70
BN 160MR	**M 4LC**	12.50	16.80	12.50	16.80	-	-
BN 160M	**-**	-	-	12.50	16.80	-	-
	M 5SA					8.60	11.50
BN 160MB	**M 5SB**	17.50	23.40	-	-	-	-
BN 160L		-	-	17.50	23.40	12.60	16.90
	M 5SC	21.50	28.80	-	-	-	-
BN 180M	**M 5LA**	24.50	32.80	21.50	28.80	-	-
BN 180L	**-**	-	-	25.30	33.90	17.50	23.40
BN 200L	**-**	-	-	34.00	45.50	-	-
BN 200LA	**-**	34.00	45.50	-	-	22.00	30.00

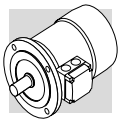

BXN / BX / BE / MXN / MX / ME motors are available at 60 Hz on a 4 pole configuration only, and their power rating is the same as their 50 Hz counterpart. Double speed BN / M motors supplied at 60 Hz will have an increase of nominal power, referred to 50 Hz, equal to 15%, whereas double speed BXN / BX / BE / MXN / MX / ME motors are not available. If a nominal power rating, equal to the normalised nominal power rating at 50 Hz, was requested to be on a nameplate of a motor meant to be voltage supplied at 60 Hz, the PN option shall be specified on the motor designation. Motors normally designed for a 50 Hz frequency may be used on a 60 Hz operating grid, but the related data shall be updated according to the following table. Motors designated for 50 Hz operation show on the nameplate also the values for 60 Hz operation (excluding motors in CUS execution and brake motors). See the following table.

(F17)

	50 Hz	**60 Hz**			
	V - 50 Hz	**V** - 60 Hz	**Pn** - 60 Hz	$\mathbf{M_n}$, $\mathbf{M_a/M_n}$ - 60 Hz	**n** [min^{-1}] - 60 Hz
BXN / MXN BX / MX BE / ME	**230/400 Δ/Y**	265 - 460 Δ Y	1	0.83	1.2
	400/690 Δ/Y	460 Δ			
BN / M	**230/400 Δ/Y**	220 - 240 Δ			
		380 - 415 Y			
	400/690 Δ/Y	380 - 415 Δ			
BN / M	**230/400 Δ/Y**	265 - 280 Δ	1.15	1	1.2
		440 - 480 Y			
	400/690 Δ/Y	440 - 480 Δ			

NOTE: For BXN and MXN motors refer to EVOX specific catalogue.

M7.3 Ambient temperature

Catalogue rating values are calculated for 50 Hz operation and for standard ambient conditions (temperature 40°C [104°F]; elevation ≤ 1000 m a.s.l.) as per the CEI EN 60034-1 Standards.
The motors can be used within the 40 - 60 °C [104 - 140 °F] temperature range with rated power output adjusted by factors given in the table below.

(F18)

Ambient temperature (°C)	40	45	50	55	60
Ambient temperature (°F)	104	113	122	131	140
Permitted power as a % of rated power	1.00	0.97	0.94	0.90	0.86

Should a derating factor higher than 15% apply please consult factory.

M7.4 50 HZ normalized power

PN

This option ensures the motor nameplate includes 50 Hz normalized power information even when the motor is designated for 60 Hz operation. The PN option is applied by default in the following cases:

- Standard 60 Hz Voltages: For 230/460V-60Hz and 330/575V-60Hz supplies, regardless of any certification options.
- With “CUS” Option: When the CUS option is selected in combination with the following voltages:
  - 220/440V-60Hz
  - 230/460V-60Hz
  - 240/480V-60Hz
  - 330/575V-60Hz

Duty Cycle Note: These rules apply regardless of the duty type. For instance, a motor configured as 240/480V-60Hz with “CUS” and S3 duty will maintain the same S3 power rating as its 50Hz equivalent by default.

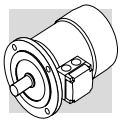

M7.5 Motors for USA and Canada

CUS

CUS option is available in NEMA Design C execution for BN, BE, M, ME motors, and NEMA Design B for BX motors, with regards to the electrical features. The BXN and MXN motors are cURus certified as standard. Motors are certified in compliance with CSA (Canadian Standard) C22.2 N° 100 and UL (Underwriters Laboratory) UL 1004-1 standards, as stated on UL file E308649.
All powers BN-BE-M-ME and BXN-MXN with powers between 0.12 and 0.55 kW [0.18 and 0.75 hp] included motors nameplates show the below marks:

S1 continuous duty BXN/MXN ≥ 0.75 kW [1 hp] and BX/MX ≥ 0.75 kW [1 hp] motors nameplates show the below marks and are certified in compliance with the energy efficiency standards in effect in the USA and Canada, respectively provided by DOE (10 CFR Part 431) and NRCan (Energy Efficiency Regulations), tested according to CSA C390 standard.

ENERGY

CC320B

BX 100 motors are available for the USA only and not for Canada, and the related marks reported on the nameplates are the following:

ENERGY

CC320B

BX≥200K motors shows on nameplate the logo reported below and are compliant to energy efficiency regulations of USA and Canada, respectively established from DOE (10 CFR Part 431) and from NRCan (Energy Efficiency Regulations), and tested in accordance to CSA C390.

CERTIFIED SAFETY US-CA E473868

CUS option is selectable in combination to U1 only for BX≥200K.
As specified under the ANSI C84.1 standard, the US power mains voltages and the corresponding rated voltages to be specified for the motor are indicated in the following table:

(F19)

Frequency	Mains voltage	V_{mot}
60 Hz	208 V	**200 V**
	240 V	**230 V**
	480 V	**460 V**
	600 V	**575 V**

BX motor with CUS option are available with the following nominal Voltage/Frequency combinations:

(F20)

	V_{mot}
BX ≤ 132	265/460 - 60 Hz
BX ≤ 180	230/460 - 60 Hz 330/575 - 60 Hz
BX ≥ 160 BX ≥ 200K BY ≥ 280K	460/800 - 60 Hz

CUS option is applicable onto 50 Hz operating motors as well (motors BX, MX excluded).

Motors with voltage in ratio 2 (e.g. 230/460-60; 220/440-60) feature, as standard, a 9-stud terminal board. For same executions, as well as for 575V-60Hz executions, as well as for 575V-60Hz supply, the nominal rating is coincident with the correspondent 50Hz rating.
For DC brake motors type BN_FD, the rectifi er is connected to a single-phase 230 VAC supply volt- age in the motor terminal box.
Brake power supply for brake motors is as follows:

BN_FD **M_FD**
Connected to terminal box 1~230V c.a.

M7.6 Motors certified for India

BIS

Low voltage motors ≥0.1 2kW [0.18 hp] manufactured or imported in India must comply with the requirements of the Bureau of Indian Standards (BIS), and their nameplates bear the ISI mark.
BE, BX, BXN motors with power up to 7.5 kW [10 hp] included, are avaiable with the above mentioned certification and, when BIS option is selected, are provided with the nameplate reporting the following logo:

M7.7 China Compulsory Certification

CCC

Electric motors destined for sale in the People's Republic of China must be certified under the CCC (China Compulsory Certification) system. The following motors are available with CCC certification:
- BN/M motors under 0.12 kW [0.18 hp] rated for S1 continuous duty.
- BN/M motors up to 7 Nm [62 lb•in] rated for S3 discontinuous duty cycle only.

These motors will show the following CCC mark:

CCC option is not available for servo - ventilated motors.

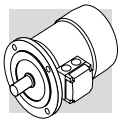

M7.8 Motor certified for China (China Energy Label)

CEL

In addition to the mandatory CCC certification specified above, low voltage motors ≥0.75 kW [1 hp] manufactured or imported in China must be certified and registered by the label office and provided with an energy label certifying they meet the energy efficiency levels as defined in GB18613-2012.
BX motors with power from 2.2 to 355 kW [3 to 476 hp] included are available with the above mentioned certification and, when CEL option is selected, are provided with the following sticker applyed to the motor:



Note: The CEL (China Energy Label) is not needed for discontinuous duty cycle and in case of servo-ventilated motors.

BX motors with CEL option are available with the following nominal Voltage/Frequency combinations:

(F21)

	V_{mot}
BX ≥ 200	380/660 - 50 Hz
100 ≤ BX ≤ 132	230/400 - 50 Hz
160 ≤ BX ≤ 180	400/690 - 50 Hz

M7.9 Motor certified for global motor

CN

With the CN option, BXN and MXN motors can be sold in the most important markets worldwide such as Europe, UK, USA, Canada, China, Russia, Australia and New Zealand.
In detail, the motor will bear the CE, UKCA, UL, CCC and, where required, CEL labelling on the nameplate. The motors also comply with EAC and EECA requirements.
This option is available in the following winding/power combinations:

(F22)

	Size	Power	Service Duty	Winding	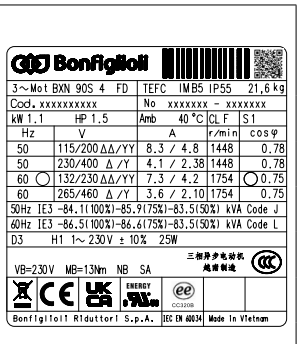
BXN	63MA to 80MA	0.12 to 0.55 kW [0.18 to 0.75 hp]	S1	WD1 - WD3*	
MXN	05MA to 20MA				
BXN	80MB to 112M	0.75 to 4 kW [1 to 5.5 hp]	S1	WD1	
MXN	20MB to 35M				
BXN	132S to 132M	5.5 to 7.5 kW [7.5 to 10 hp]	S1	WD2	
MXN	40S to 40M				

* Brazilian certification is standard on the WD3 winding only, and additional INMETRO labelling is provided.

M7.10 Motors certified for Brazil

NBR

Brazilan laws regulamentates the manufacturing and importation of electric motor in the country. These have to be approved by NBR trough a declaration of the motor efficiency level at INMETRO. Motor compliant to NBR must report the declared efficiency value and have to be provided with a specific NBR nameplate and the additional mark shown in picture below.



The NBR option is available for motors:
- BX with powers from 0.75 to 22 kW [1 to 30 hp] included
- BX… K with powers from 30 to 355 kW [40 to 476 hp] included

BX motors with NBR option are available with the following nominal Voltage/Frequency combinations:

(F23)

	V_{mot}
BX90SR ... BX160	220/380 - 60 Hz 220/440 - 60 Hz
BX 180	220/380 - 60 Hz 220/440 - 60 Hz 380/660 - 60 Hz
BX ≥ 200K	440/760 - 60 HZ

M7.11 Motors certified for Australia

EECA

Electric motor covered by Australian/NewZeland's energy regulation must be listed in the national database Energyratig. Mootr with EECA option are registered in the previously mentioned database and can be sold in Australia and New Zeland.
EECA option is available for BX ... K motor with power from 30 to 355 kW [40 to 476 hp] included.

BX motors with EECA option are available with the following nominal Voltage/Frequency combinations:

(F24)

	V_{mot}
BX ≥ 200K	400/690 - 50 Hz

M7.12 Insulation class

CL F

Bonfiglioli motors use class F insulating materials (enamelled wire, insulators, impregnation resins) as compare to the standard motor. In standard motors, stator windings over temperature normally stays below the 80 K limit corresponding to class B over temperature. A careful selection of insulating components makes the motors compatible with tropical climates and normal vibration. For applications involving the presence of aggressive chemicals or high humidity, contact Bonfiglioli Engineering for assistance with product selection.

CL H

Motors manufactured in insulation class **H** are available at request.

(F26)

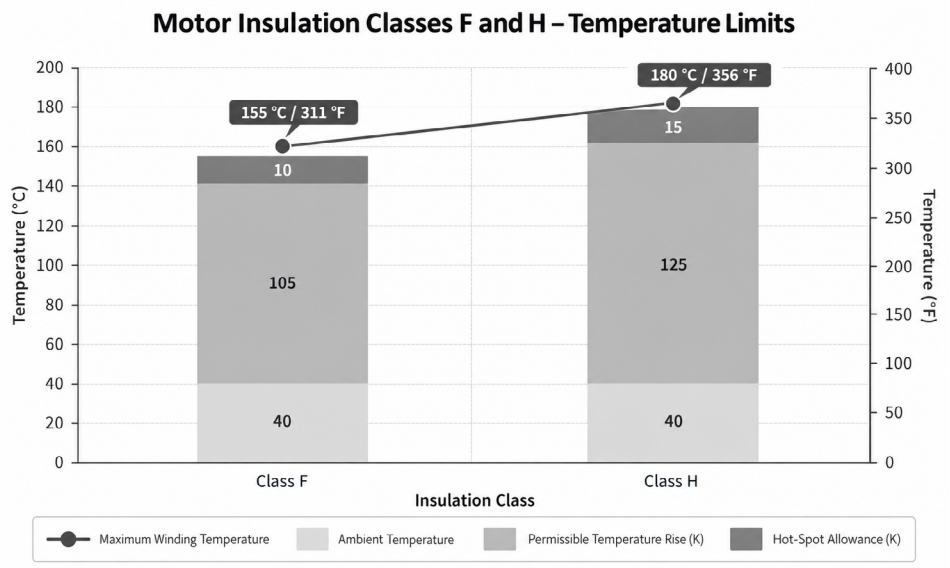

M7.13 Type of duty

Unless otherwise specified, catalogue motor power refers to continuous duty S1. Any operating conditions other than S1 duty must be identified in accordance with duty cycle definitions laid down in standards CEI EN 60034-1. For duty cycles S2 and S3, the power increase co-efficient reported in the following table may be used. Please note that the table provided below applies to single-speed motors. As an alternative to S1 continuous duty, one of the following values can be specified at the product configuration stage (single speed motors only): S2, S3. The motor nameplate will be marked with an increased power rating to suit the type of duty, and with specific electrical data and a duty type of S2-30 min, S3-70% respectively.

BN and M motors can be configured for operation at duty cycle S2(30min) and S3(70%) as standard option, Other requests which are different in terms of % or min are considered a speciality.
BXN and MXN motors can be configured as standard at S2=10min, S2=30min, S2=60min or S3=25%, S3=40%, S3=70%.

(F25)

	Type of duty						
	S2			**S3 ***			**S4 - S9**
	Duration (min)			Intermittence (I)			
	10	**30 (*)**	**60**	**25%**	**40%**	**70% (*)**	Contact us **
f_m	1.35	1.15	1.05	1.25	1.15	1.1	

* Cycle duration must, in any event, be equal to or less than 10 minutes; if this time is exceeded, please contact our Technical Service.
** For any duty cycle different from S1, S2-30min and S3-70% please contact Bonfiglioli's Technical Service.
(*) Default values from options (tab. F05).

M7.13.1 Cyclic duration factor:

$$I = \frac{t_f}{t_f + t_r} \cdot 100 \qquad (01)$$

t_f = work time under constant load
t_r = rest time

M7.13.2 Limited duration duty S2

This type of duty is characterized by operation at constant load for a limited time, which is shorter than the time required to reach thermal equilibrium, followed by a rest period of sufficient duration to restore ambient temperature in the motor.

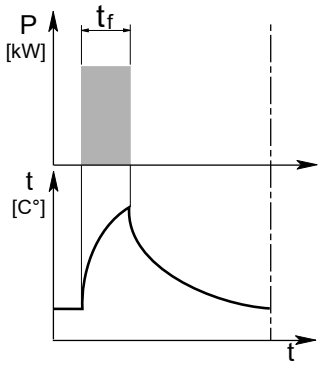

M7.13.3 Periodical intermittent duty S3:

This type of duty is characterized by a sequence of identical operation cycles, each including a constant load operation period and a rest period.

For this type of duty, the starting current does not significantly influence overtemperature.

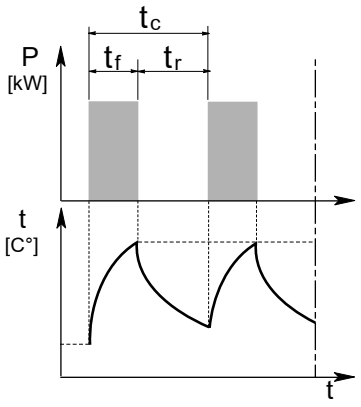

M7.13.4 Duty with non-periodical load and speed variations S9:

This type of duty is characterized by a load and speed variation in which the motor operates generally non-periodically within the permissible operating range. This duty includes frequent overloads which may greatly exceed the full loads.

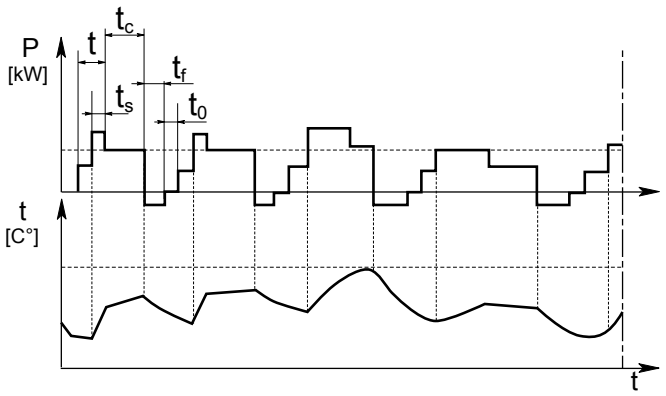

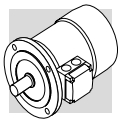

M7.14 Inverter-controlled motors

The electric motors Bonfiglioli may be used in combination with PWM inverters with rated voltage at transformer input up to 500 V.Standard motors use a phase insulating system with separators, class 2 enamelled wire and class H impregnation resins (1600V peak-to-peak voltage pulse capacity and rise edge t_s > 0.1µs at motor terminals). The Bonfiglioli electric motors may be continuously operated (S1 duty) in “turn-down” mode, i.e. at frequencies lower than the rated frequency, hereafter also called “base frequency” - fb, in ratios fb/f up to 10 : 1, according to the below reported tables. Typical torque/speed curves referred to S1 duty for motors with base frequency 50 or 60Hz is are reported in the table below.

(F27)

INVERTER OPERATION - BX MOTORS TURN-DOWN DATA

4 pole 1800 min^{-1} S1		Inverter operation Motor data 10:1 (60-6Hz) CONSTANT TORQUE					Inverter operation Motor data 5:1 (60-12Hz) CONSTANT TORQUE					60Hz grid supply - Motor data										
IEC Motor Type	Compact Motor Type	T_6		N_6	P_6		T_{12}		n_{12}	P_{12}		P_n		n	η	T_n	In 230V	In 460V	cosφ	Is/In	Jm	kVA Code Letter
		[Nm]	[lb-in]	[rpm]	[HP]	[kW]	[Nm]	[lb-in]	[rpm]	[HP]	[kW]	[HP]	[kW]	[rpm]	%	[lb·in]	[A]	[A]		p.u.	[lb·ft2]	
BX 90SR 4	**MX 2SB 4**	4.00	35.4	54	0.03	0.02	6.13	54.25	176	0.15	0.11	1.0	0.75	1755	85.5	36.3	2.96	1.48	0.73	8.0	0.064	L
BX 90S 4		5.28	46.7	54	0.04	0.03	7.73	68.42	195	0.21	0.16	1.5	1.1	1740	86.5	53.1	4.30	2.15	0.74	8.2	0.064	K
BX 90LA 4		7.25	64.2	45	0.05	0.03	9.88	87.45	234	0.32	0.24	2.0	1.5	1735	86.5	73.5	5.82	2.91	0.75	7.4	0.074	K
	MX 3SA 4	5.50	48.7	57	0.04	0.03	8.25	73.02	212	0.25	0.18	1.5	1.1	1755	86.5	53.1	4.38	2.19	0.73	7.9	0.083	L
	MX 3SB 4	7.97	70.5	69	0.08	0.06	10.84	95.94	270	0.41	0.31	2.0	1.5	1755	86.5	72.6	5.92	2.96	0.72	8.5	0.102	L
BX 100LA 4	**MX 3LA 4**	13.9	123.0	87	0.171	0.127	15.8	140.0	294	0.653	0.487	3.0	2.2	1760	89.5	105.3	8.8	4.4	0.71	9.9	0.173	N
BX 100LB 4	**MX 3LB 4**	17.1	151.2	76	0.183	0.137	21.5	190.0	270	0.814	0.607	4.0	3.0	1750	89.5	145.2	11.8	5.9	0.71	9.1	0.173	M
BX 112M 4		22.5	199.4	95	0.301	0.224	26.7	236.3	292	1.094	0.816	5.0	3.7	1760	89.5	177.0	13.4	6.7	0.77	10.4	0.308	M
	MX 4SA 4	21.5	190.6	103	0.311	0.232	27.6	244.1	303	1.172	0.874	5.0	3.7	1770	89.5	177.0	13.2	6.6	0.78	9.9	0.534	M
BX 132SB 4	**MX 4SB 4**	41.4	366.0	116	0.674	0.503	44.5	393.8	317	1.979	1.475	7.5	5.5	1770	91.7	265.5	19.8	9.9	0.76	10.7	0.973	N
BX 132MA 4	**MX 4LA 4**	48.9	432.8	124	0.848	0.632	57.0	504.7	312	2.498	1.863	10.0	7.5	1770	91.7	362.9	26.8	13.4	0.76	11.0	0.973	N
BX 160MA 4	**MX 5SA 4**	52.5	464.9	111	0.819	0.611	65.9	583.5	306	2.832	2.112	12.5	9.2	1770	92.4	442.5	31.2	15.6	0.80	9.1	1.542	L
BX 160MB 4	**MX 5SB 4**	60.1	531.8	127	1.074	0.801	75.4	667.2	308	3.261	2.432	15.0	11.0	1770	92.4	522.2	36.4	18.2	0.82	9.3	1.851	L
BX 160L 4	**MX 5LA 4**	81.2	718.6	137	1.564	1.167	96.6	855.2	317	4.297	3.204	20.0	15.0	1770	93.0	716.9	49.0	24.5	0.81	10.9	2.112	M
BX 180M 4		143.5	1270.4	138	2.790	2.080	176.6	1562.7	315	7.808	5.822	25.0	18.5	1780	93.6	876.2	57.2	28.6	0.85	13.0	3.702	N
BX 180L 4		138.6	1226.3	145	2.819	2.102	160.3	1418.7	325	7.307	5.449	30.0	22.0	1775	93.6	1044.4	66.2	33.1	0.87	11.5	3.939	M

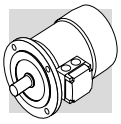

(F28)

INVERTER OPERATION - BE MOTORS TURN-DOWN DATA																			
4 pole 1800 min^{-1} S1	Inverter operation Motor data 10:1 (60-6Hz) CONSTANT TORQUE				Inverter operation Motor data 5:1 (60-12Hz) CONSTANT TORQUE				60Hz grid supply - Motor data										
Type	T_6	N_6	P_6		T_{12}	n_{12}	P_{12}		P_n		n	η	T_n	In 230V	In 460V	cosφ	Is/In	Jm	kVA Code Letter
	[lb·in]	[rpm]	[HP]	[kW]	[lb·in]	[rpm]	[HP]	[kW]	[HP]	[kW]	[rpm]	%	[lb·in]	[A]	[A]		p.u.	[lb·ft2]	
BE 80B 4	36.3	125	0.072	0.054	36.3	305	0.176	0.131	1	0.75	1745	82.5	36.3	2.92	1.46	0.78	7.6	0.066	K
BE 90S 4	53.4	120	0.102	0.076	53.4	300	0.254	0.190	1.5	1.1	1740	84	53.4	4.50	2.25	0.73	7.7	0.066	L
BE 90LA 4	65.5	120	0.125	0.093	72.9	300	0.347	0.259	2	1.5	1740	84.5	72.9	6.20	3.10	0.73	7.1	0.081	K
BE 100LA 4	99.0	125	0.196	0.146	106.6	305	0.516	0.385	3	2.2	1745	87.5	106.6	8.40	4.20	0.76	7	0.128	J
BE 100LB 4	120.9	115	0.221	0.165	146.1	295	0.684	0.510	4	3	1735	87.5	146.1	11.80	5.90	0.76	7	0.145	K
BE 112M 4	145.8	130	0.301	0.224	178.7	310	0.879	0.655	5	3.7	1750	87.5	178.7	13.20	6.60	0.80	7.8	0.249	K
BE 132S 4	228.5	140	0.507	0.378	264.1	320	1.341	1.000	7.5	5.5	1760	89.5	264.1	18.60	9.30	0.83	8.7	0.641	K
BE 132MA 4	301.9	140	0.671	0.500	360.2	320	1.829	1.364	10	7.5	1760	89.5	360.2	25.40	12.70	0.83	8	0.757	K
BE 132MB 4	370.9	140	0.824	0.614	441.8	320	2.243	1.673	12.5	9.2	1760	90	441.8	31.20	15.60	0.82	8.3	0.854	K
BE 160M 4	451.1	145	1.038	0.774	526.7	325	2.716	2.025	15	11	1765	91	526.7	37.40	19	0.81	7.7	1.542	J
BE 160L 4	543.1	150	1.292	0.964	645.8	330	3.381	2.522	20	15	1770	90.5	716.3	51.00	25.5	0.81	7.1	1.875	J
BE 180M 4	663.6	145	1.527	1.139	789.2	325	4.070	3.035	25	18.5	1765	91.9	885.9	60.60	30.3	0.83	7.3	2.966	H
BE 180L 4	757.8	150	1.803	1.345	901.2	330	4.718	3.519	30	22	1770	92.5	1050.5	72.00	36.0	0.83	8.1	3.916	J

(F29)

INVERTER OPERATION - BN MOTORS TURN-DOWN DATA																			
4 pole 1800 min^{-1} S1	Inverter operation Motor data 10:1 (60-6Hz) CONSTANT TORQUE				Inverter operation Motor data 5:1 (60-12Hz) CONSTANT TORQUE				60Hz grid supply - Motor data										
Type	T_6	N_6	P_6		T_{12}	n_{12}	P_{12}		P_n		n	η	T_n	In 230V	In 460V	cosφ	Is/In	Jm	kVA Code Letter
	[lb·in]	[rpm]	[HP]	[kW]	[lb·in]	[rpm]	[HP]	[kW]	[HP]	[kW]	[rpm]	%	[lb·in]	[A]	[A]		p.u.	[lb·ft2]	
BN 56A 4	3.0	50	0.0024	0.0018	3.0	230	0.011	0.008	0.08	0.06	1670	53	3.0	0.52	0.26	0.55	2.9	0.0036	J
BN 56B 4	4.1	50	0.0033	0.0024	4.5	230	0.017	0.012	0.12	0.09	1670	59	4.5	0.74	0.37	0.52	2.8	0.0036	H
BN 63A 4	5.1	30	0.0024	0.0018	6.1	210	0.020	0.015	0.16	0.12	1650	55	6.1	0.86	0.43	0.64	3.1	0.0048	H
BN 63B 4	7.2	50	0.0057	0.0043	9.4	230	0.034	0.026	0.25	0.18	1670	58	9.4	1.36	0.68	0.59	3.1	0.0055	H
BN 71A 4	9.5	80	0.012	0.009	12.2	260	0.050	0.038	0.33	0.25	1700	64	12.2	1.30	0.65	0.74	4.3	0.0138	H
BN 71B 4	14.3	80	0.018	0.014	18.5	260	0.076	0.057	0.5	0.37	1700	66	18.5	1.94	0.97	0.73	4.5	0.0164	H
BN 80A 4	21.7	90	0.031	0.023	27.6	270	0.12	0.088	0.75	0.55	1710	73	27.6	2.56	1.28	0.75	4.9	0.0356	H
BN 80B 4	28.8	100	0.046	0.03	36.6	280	0.16	0.12	1	0.75	1720	78	36.6	3.20	1.60	0.75	6.2	0.0482	J
BN 90S 4	40	100	0.063	0.05	47	280	0.21	0.16	1.5	1.1	1720	78	55	4.86	2.43	0.74	5.7	0.0499	J
BN 90LA 4	55	100	0.087	0.06	65	280	0.29	0.22	2	1.5	1720	81	73	6.24	3.12	0.74	6.6	0.0665	K
BN 90LB 4	65	100	0.103	0.08	77	280	0.34	0.26	2.5	1.85	1720	80.4	92	7.60	3.80	0.76	6.5	0.0712	K
BN 100LA 4	76	100	0.120	0.09	90	280	0.40	0.30	3	2.2	1720	81	110	9.6	4.8	0.73	5.5	0.096	H
BN 100LC 4	104	110	0.182	0.14	124	290	0.57	0.43	5	3.7	1730	84	182	15	7.5	0.74	5.6	0.145	K
BN 112M 4	147	110	0.257	0.19	175	290	0.81	0.60	5.5	4	1730	85	200	16	8	0.76	7.0	0.233	K
BN 132S 4	195	110	0.340	0.25	232	290	1.07	0.80	7.5	5.5	1730	84	273	20	10	0.84	6.3	0.506	H
BN 132MA 4	253	120	0.481	0.36	300	300	1.43	1.07	10	7.5	1740	85	362	26.2	13.1	0.84	6.1	0.641	H
BN 132MB 4	297	130	0.612	0.46	353	310	1.74	1.29	12.3	9.2	1750	86.4	443	33.0	16.5	0.81	6.8	0.757	J
BN 160MR 4	350	120	0.667	0.50	416	300	1.98	1.48	15	11	1740	88	543	38.8	19.4	0.81	6.5	0.855	H
BN 160L 4	488	130	1.007	0.75	581	310	2.86	2.13	20	15	1750	90	720	49.6	24.8	0.84	5.8	1.544	G
BN 180M 4	604	140	1.342	1.00	718	320	3.65	2.72	25	18.5	1760	90	895	62.6	31.3	0.83	5.8	1.88	G
BN 180L 4	699	140	1.552	1.16	831	320	4.22	3.15	30	22	1760	89.6	1074	78.0	39.0	0.79	6.8	2.97	H
BN 200L 4	879	140	1.954	1.46	1046	320	5.31	3.96	40	30	1760	90.5	1432	104.0	52.0	0.80	8.4	3.92	K

Key: T_6 Torque at 6 Hz n_6 Speed at 6 Hz P_6 Output power at 6 Hz
T_{12} Torque at 12 Hz n_{12} Speed at 12 Hz P_{12} Output power at 12 Hz

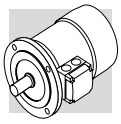

On self - ventilated motors (IC411) the cooling capacity may be impaired at frequencies lower than 60 Hz due to the lower speed, thus the allowed torque is decreased accordingly, as per the above tables. The use of thermal protective devices (see the options section in this catalogue) is strongly recommended when a 5:1 (or higher, up to 10:1) turn down is operated, in order to guarantee the motor safety in case of accidental overheating. For a more effective cooling, even at the lowest frequencies, motors equipped with a forced ventilation system (i.e. servo fan) may be also available - please contact the Bonfiglioli Technical Department for more details.
For the operation above the base frequency fb, upon reaching the maximum output voltage of the inverter, the motor enters a constant - power field of operation also called “field weakening” range, and the shaft torque drops with ratio f / f_b. As the motor peak torque decreases with a ratio $(f / f_b)^2$, the allowed overload capacity of the motor must be reduced progressively above a certain speed, depending on the motor.

(F30)

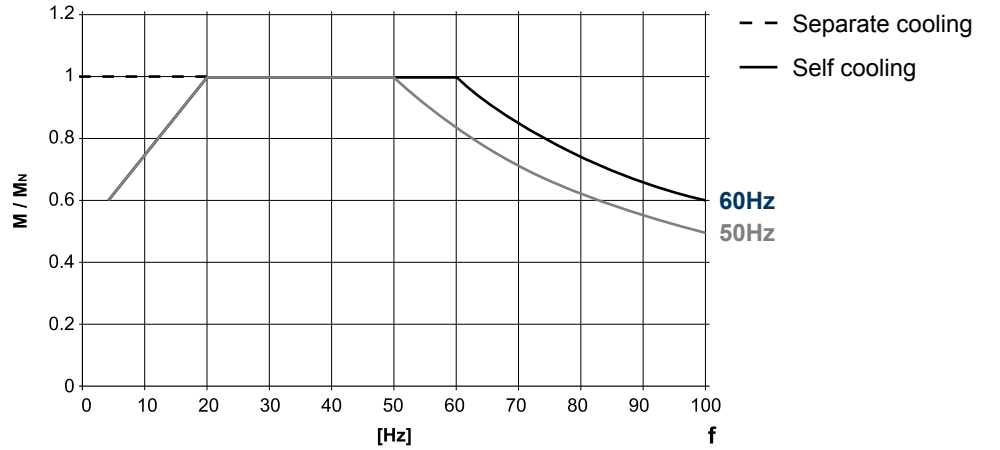

The following table reports the mechanical speed limit for motors operating above rated frequency:

(F31)

		**n** [min^{-1}]		
		2p	**4p**	**6p**
≤ BE 112 - BN 112	**ME2, ME3 M05 ... M3**	5200	4000	3000
≥ BE 132 - BN 132	**ME4, ME5 M4, M5**	4500	4000	3000
BXN 63 ... BXN 132	**MXN 05 ... MXN 35**		4000	
BX 63 ... BX 180	**MX05 ... MX5**		4000	
BX 200K			4500	
BX 225K ... BX 250K			3600	
BX 280K, BY 280K			2000	
BX 315K, BX 355K			2200	

Above rated speed, motors generate increased mechanical vibration and fan noise. Class B rotor balancing is highly recommended in these applications. Installing a separate supply fan cooling may also be advisable. Remote-controlled fan and brake (if fitted) must always be connected direct to mains power supply.

M7.15 Permissible starts per hour, Z

The rating charts of brakemotors lend the permitted number of starts Z0, based on 50% intermittence and for unloaded operation.
The catalogue value represents the maximum number of starts per hour for the motor without exceeding the rated temperature for the insulation class F.
To give a practical example for an application characterized by inertia Jc, drawing power Pr and requiring mean torque at start-up ML the actual number of starts per hour for the motor can be calculated approximately through the following equation:

$$Z = \frac{Z_0 \cdot K_c \cdot K_d}{K_J} \qquad (02)$$

where:

$K_J = \frac{J_m + J_c}{J_m}$	inertia factor
$K_c = \frac{M_a - M_L}{M_a}$	torque factor
$K_d =$	load factor, see the following table

(F32)

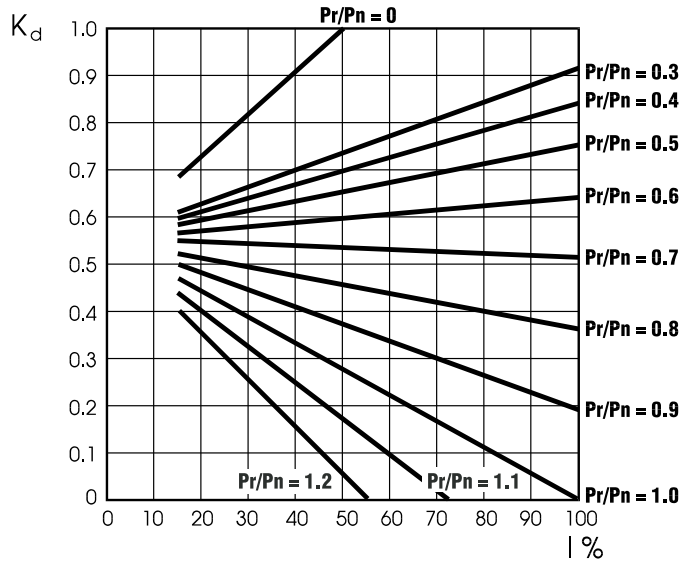

If actual starts per hour is within permitted value (Z) it may be worth checking that braking work is compatible with brake (thermal) capacity Wmax also given in tables (F38), (F41) and dependent on the number of switches (c/h).

M8 BRAKE MOTORS - DIRECT CURRENT BRAKE FOR BX-BE-BX | MX-ME-M

M8.1 Operation

Versions with incorporated brake use spring-applied DC (FD option) brakes.
All brakes are designed to provide fail-safe operation, meaning that they are applied by spring-action in the event of power failure.

(F33)

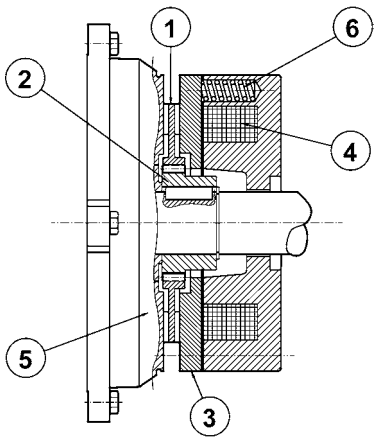

Key:
① brake disc
② disc carrier
③ pressure plate
④ brake coil
⑤ motor rear shield
⑥ brake springs

When voltage is interrupted, pressure springs push the armature plate against the brake disc. The disc becomes trapped between the armature plate and motor shield and stops the shaft from rotation.
When the coil is energized, a magnetic field strong enough to overcome spring action attracts the armature plate, so that the brake disc – which is integral with the motor shaft – is released.

M8.2 Most significant features

- High braking torques (normally Mb ≈ 2 Mn), braking torque adjustment.
- Steel brake disc with double friction lining (low-wear, asbestos-free lining).
- Hexagonal seat on motor shaft fan end (N.D.E.) for manual rotation (not compatible with options PS, RC*, TC*, U1, U2, EN1, EN2, EN3, EN4, EN5, EN6).
- Manual release lever (options R and RM for FD).
- Corrosion-proof treatment on all brake surfaces.
- Insulation class F.

(*) Not accessible without removing the fan cover

Frame sizes: BX 63 ... BX 180, BX200LAK … BX 355MCK - BE 63 ... BE 180L - BN 63 … BN 200L / MX05 ... MX5 - ME05 ... ME5 - M05 ... M5

(F34)

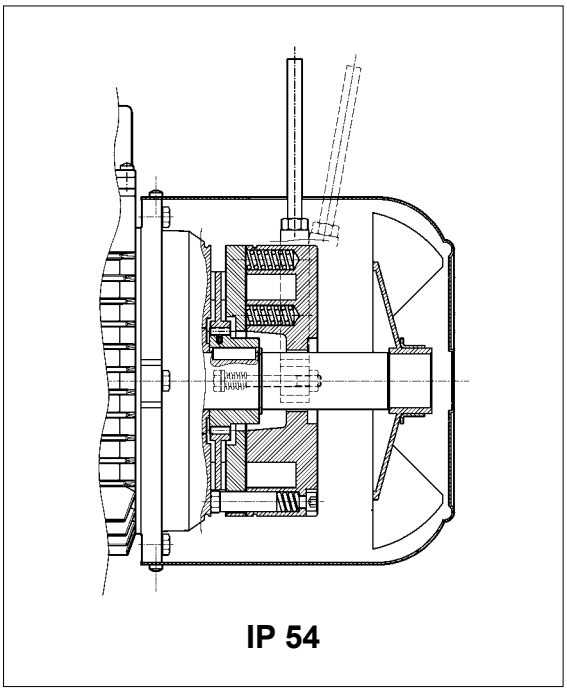

IP 54

(F35)

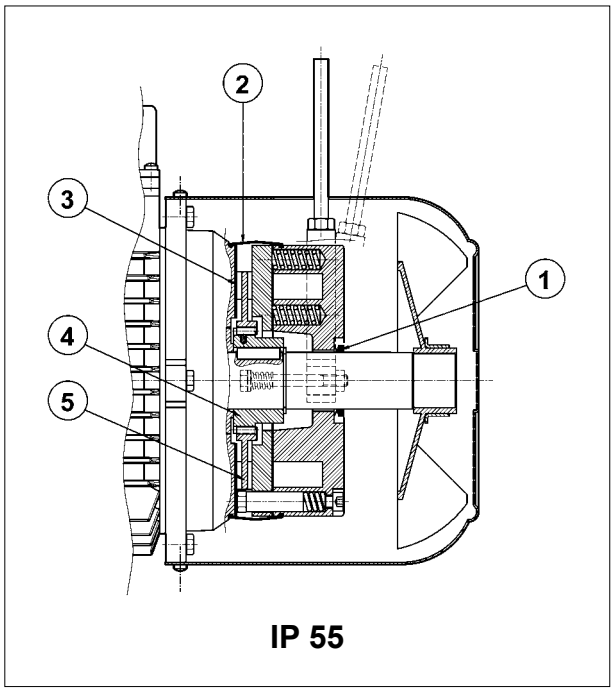

IP 55

Direct current toroidal-coil electromagnetic brake bolted onto motor shield. Preloading springs provide axial positioning of magnet body.
Brake disc slides axially on steel hub shrunk onto motor shaft with anti-vibration device.
Brake torque factory setting is indicated in the corresponding motor rating charts. Braking torque may be modified by changing the type and/or number of springs.
At request, motors may be equipped with manual release lever with automatic return (**R**) or system for holding brake in the released position (**RM**).
See variant at paragraph “BRAKE RELEASE SYSTEMS” for available release lever locations.
FD brakes ensure excellent dynamic performance with low noise. DC brake operating characteristics may be optimized to meet application requirements by choosing from the various rectifier/power supply and wiring connection options available.
For applications involving lifting and/or high hourly energy dissipation, contact Bonfiglioli’s Technical Service.

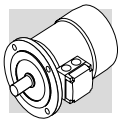

M8.3 Degree of protection

The standard protection degree for BN - M, BE - ME, BX≤180 and MX is IP54, while for BX...K200 standard protection degree is IP55.
BN - M, BE - ME and BX≤180 - MX brakemotor with a standard protection degree IP54 can be requested with a protection degtree IP55. If **IP55** is selected the following construction variants will be applied:

① V-ring at N.D.E. of motor shaft
② dust and water-proof rubber boot
③ stainless steel ring placed between motor shieldand brake disc
④ stainless steel hub
⑤ stainless steel brake disc

M8.4 FD brake power supply

A rectifier accommodated inside the terminal box feeds the DC brake coil. Wiring connection across rectifier and brake coil is performed at the factory.
Brake power supply voltage V_B is as indicated in the following table, regardless of mains frequency:

(F36)

FD brake supply voltages				
Brake power supply voltage V	FD brake			
	Power supply from the motor with rectifier NB|SB	Power sopply from the motor with rectifier NBR|SBR	Separate power supply with rectifier	Power supply without rectifier
24	✗	✗	✗	✓
100	✗	✗	✗	✓
110	✗	✗	✓	✗
115	✗	✗	✓	✗
120	✗	✗	✓	✗
127	✗	✗	✓	✗
180	✗	✗	✗	✓
208	✓	✗	✓	✗
220	✓	✗	✓	✗
230	✓	✓	✓	✓
240	✓	✗	✓	✗
255	✓	✗	✗	✗
265	✓	✗	✗	✗
280	✓	✗	✗	✗
290	✓	✗	✗	✗
330	✓	✗	✗	✗
380	✓	✗	✓	✗
400	✓	✓	✓	✗
415	✓	✗	✓	✗
440	✓	✗	✓	✗
460	✓	✗	✓	✗
480	✓	✗	✓	✗
500	✓	✗	✓	✗

The diode half-wave rectifier (VDC ≈ 0,45 x VAC) is available in versions **NB, SB, NBR** e **SBR**, as detailed in the table below:

(F37)

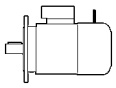		brake	~ / ⎓	
			standard	on request
BX 63 - BE 63 - BN 63	**MX05 - ME05 - M05**	FD 02	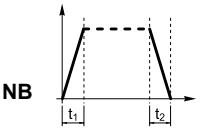	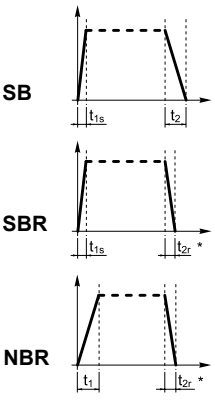
BX 71 - BE 71 - BN 71	**MX1 - ME1 - M1**	FD 03 FD 53		
BX 80 - BE 80 - BN 80	**MX2 - ME2 - M2**	FD 04		
BX 90S - BE 90S - BN 90S	**—**	FD 14		
BX 90L - BN 90L - BN 90L	**—**	FD 05		
BX 100 - BE 100 - BN 100	**MX3 - ME3 - M3**	FD 15		
—		FD 55	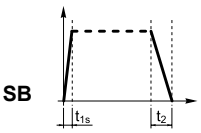	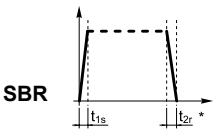
BX 112 - BE 112 - BN 112	**—**	FD 06S		
BX 132 - BE 132 - BN 132 - BN 160MR	**MX4 - ME4 - M4**	FD 56 FD 06 FD 07		
BX 160 - BE 160L - BN 160L - BN 180M	**MX5 - ME5 - M5**	FD 08		
BX 180 - BE 180L - BN 180L - BN 200M	**—**	FD 09		
BX 200LAK	**—**	FD 8	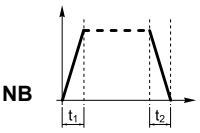	⛔
BX 225SAK - BX 225SBK	**—**	FD 9		
BX 250MAK	**—**	FD 10		
BX 280SAK - BX 315SAK	**—**	FD 1000		
BX 315SBK - BX 315SCK	**—**	FD 1600		
BX 355SAK - BX 355MCK	**—**	FD 2500	⛔	

Rectifier **SB** with electronic energizing control over-energizes the electromagnet upon power-up to cut brake release response time and then switches to normal half-wave operation once the brake has been released.

Use of the **SB** rectifier is mandatory in the event of:
- high number of operations per hour
- reduced brake release response time
- brake is exposed to extreme thermal stress

Rectifiers **NBR** or **SBR** are available for applications requiring quick brake intervention (braking condition reinstatement) response.
These rectifiers complement the **NB** and **SB** types as their electronic circuit incorporates a static switch that de-energizes the brake quickly in the event voltage is missing.
This arrangement ensures short brake release response time with no need for additional external wiring and contacts.
Optimum performance of rectifiers **NBR** and **SBR** is achieved with separate brake power supply.

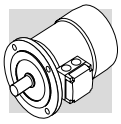

M8.5 Performance Table – FD DC Brake [metric]

The table below reports the technical specifications of DC brakes FD.

(F38)

Brake	Brake torque M_b [Nm]			Release		Braking		W_{max} per brake operation			W	P_b
	6 springs	4 springs	2 springs	t_1	t_{1s}	t_2	t_{2c}	10 s/h	100 s/h	1000 s/h		
	Nm	Nm	Nm	[ms]	[ms]	[ms]	[ms]	[J]	[J]	[J]	[MJ]	[W]
FD02	-	3,5	1,75	30	15	80	9	4.500	1.400	180	15	17
FD03	5	3,5	1,75	50	20	100	12	7.000	1.900	230	25	24
FD53	7,5	5	2,5	60	30	100	12	7.000	1.900	230	25	24
FD04	15	10	5	80	35	140	15	10.000	3.100	350	30	33
FD14	15	10	5	80	35	140	15	10.000	3.100	350	30	33
FD05	40	26	13	130	65	170	20	18.000	4.500	500	50	45
FD15	40	26	13	130	65	170	20	18.000	4.500	500	50	45
FD06S	60	40	20	-	80	220	25	20.000	4.800	550	70	55
FD56	-	75	37	-	90	250	20	29.000	7.400	800	80	65
FD06	-	100	50	-	100	250	20	29.000	7.400	800	80	65
FD07	150	100	50	-	120	200	25	40.000	9.300	1.000	130	65
FD08*	250	200	170	-	140	350	30	60.000	14.000	1.500	230	100
FD09**	400	300	200	-	200	450	40	70.000	15.000	1.700	230	120
FD8	400	400	400	176	78	236	-	65.000	7.000	650	-	85
FD9	600	600	600	324	138	176	-	12.000	12.000	1.200	-	100
FD10	800	800	800	480	194	172	-	100.000	16.000	2.000	-	150
FD1000	1.000	1.000	1.000	252	-	375	-	220.000	27.000	2.700	-	300
FD1600	1.600	1.600	1.600	366	-	498	-	230.000	35.000	3.500	-	340
FD2500	2.500	2.500	2.500	660	-	880	-	590.000	61.000	6.100	-	530

* brake torque values obtained with 9, 7 and 6 springs, respectively

** brake torque values obtained with 12, 9 and 6 springs, respectively

t_1 = brake release time with half-wave rectifier
t_{1s} = brake release time with over-energizing rectifier
t_2 = brake engagement time with AC line interruption and separate power supply
t_{2c} = brake engagement time with AC and DC line interruption – Values for t_1, t_{1s}, t_2, t_{2c} indicated in the tab. (F34) are referred to brake set at maximum torque, medium air gap and rated voltage
W_{max} = max energy per brake operation
W = braking energy between two successive air gap adjustments
P_b = brake power absorption at 20°C
M_b = static braking torque (±15%)
s/h = starts per hour

The brake pad wear depends on the operating/ambient conditions (temperature, humidity, angular speed, specifica pressure); Therefore the declared wear rate must be considered as indicative.

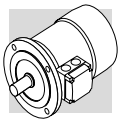

Performance Table – FD DC Brake [imperial]

The table below reports the technical specifications of DC brakes FD.

(F39)

Brake	Brake torque M_b [Nm]			Release		Braking		W_{max} per brake operation			W	P_b
	6 springs	4 springs	2 springs	t_1	t_{1s}	t_2	t_{2c}	10 s/h	100 s/h	1000 s/h		
	lb·in	lb·in	lb·in	[ms]	[ms]	[ms]	[ms]	[lb·ft]	[lb·ft]	[lb·ft]	[lb·ft × 10^6]	[W]
FD02	-	31	16	30	15	80	9	3.320	1.030	130	11	17
FD03	44	31	16	50	20	100	12	5.160	1.400	170	18	24
FD53	66	44	22	60	30	100	12	5.160	1.400	170	18	24
FD04	133	89	44	80	35	140	15	7.380	2.290	260	22	33
FD14	133	89	44	80	35	140	15	7.380	2.290	260	22	33
FD05	354	230	115	130	65	170	20	13.300	3.320	370	37	45
FD15	354	230	115	130	65	170	20	13.300	3.320	370	37	45
FD06S	531	354	177	-	80	220	25	14.800	3.540	410	52	55
FD56	-	664	328	-	90	250	20	21.400	5.460	590	59	65
FD06	-	886	443	-	100	250	20	21.400	5.460	590	59	65
FD07	1.329	886	443	-	120	200	25	29.500	6.860	740	96	65
FD08*	2.210	1.770	1.510	-	140	350	30	44.300	10.300	1.110	170	100
FD09**	3.540	2.655	1.770	-	200	450	40	51.600	11.100	1.250	170	120
FD8	3.540	3.540	3.540	176	78	236	-	47.950	5.170	480	-	85
FD9	5.310	5.310	5.310	324	138	176	-	88.500	8.860	890	-	100
FD10	7.081	7.081	7.081	480	194	172	-	73.760	11.800	1.480	-	150
FD1000	8.851	8.851	8.851	252	-	375	-	162.270	19.920	2.000	-	300
FD1600	14.161	14.161	14.161	366	-	498	-	169.640	25.820	2.590	-	340
FD2500	22.127	22.127	22.127	660	-	880	-	435.170	45.000	4.500	-	530

* brake torque values obtained with 9, 7 and 6 springs, respectively

** brake torque values obtained with 12, 9 and 6 springs, respectively

t_1 = brake release time with half-wave rectifier
t_{1s} = brake release time with over-energizing rectifier
t_2 = brake engagement time with AC line interruption and separate power supply
t_{2c} = brake engagement time with AC and DC line interruption – Values for t_1, t_{1s}, t_2, t_{2c} indicated in the tab. (F34) are referred to brake set at maximum torque, medium air gap and rated voltage
W_{max} = max energy per brake operation
W = braking energy between two successive air gap adjustments
P_b = brake power absorption at 70°F
M_b = static braking torque (±15%)
s/h = starts per hour

The brake pad wear depends on the operating/ambient conditions (temperature, humidity, angular speed, specifica pressure); Therefore the declared wear rate must be considered as indicative.

M8.6 FD brake connections

On standard single-pole motors, the rectifier is connected to the motor terminal board at the factory.
For switch-pole motors and where a separate brake power supply is required, connection to rectifier must comply with brake voltage VB stated in motor name plate.
Because the load is of the inductive type, brake control and DC line interruption must use contacts from the usage class AC-3 to IEC 60947-4-1.

Table (F40) – Brake coil with power supply from motor terminals and AC line interruption.
Delayed stop time t2 and function of motor time constants.
Mandatory when soft-start/stops are required.
Table (F41) – Brake coil with separate power supply (SA) and AC line interruption.
Normal stop time independent of motor.
Achieved stop times t2 are indicated in the table (F39).
Table (F42) – Brake coil with power supply from motor terminals and AC/DC line interruption.
Quick stop with operation times t2c as per table (F39).
Table (F43) – Brake coil with separate power supply (SA) and AC/DC line interruption.
Stop time decreases by values t2c indicated in the table (F39).

(F40)

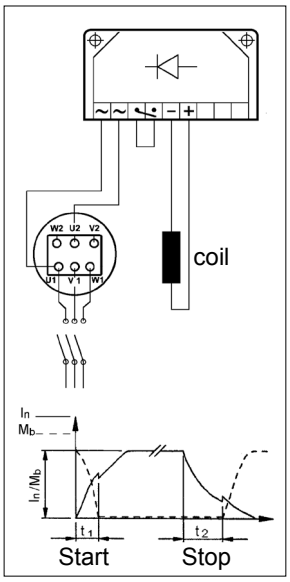

(F41)

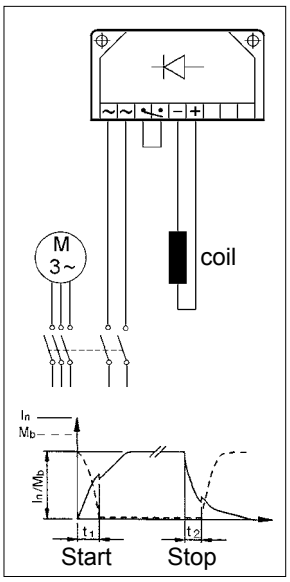

(F42)

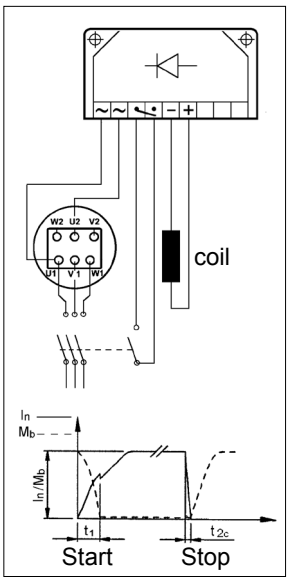

(F43)

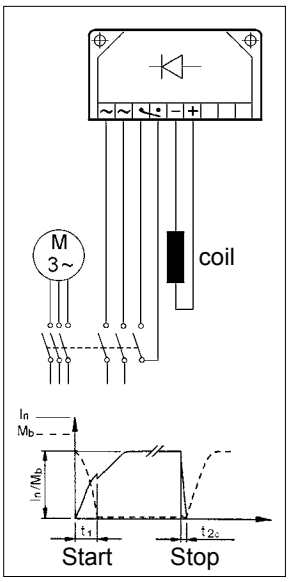

M9 BRAKE RELEASE SYSTEMS

Spring-applied brakes type FD may be equipped with optional manual release devices. These are typically used for manually releasing the brake before servicing any machine or plant parts operated by the motor.

(F44)

R

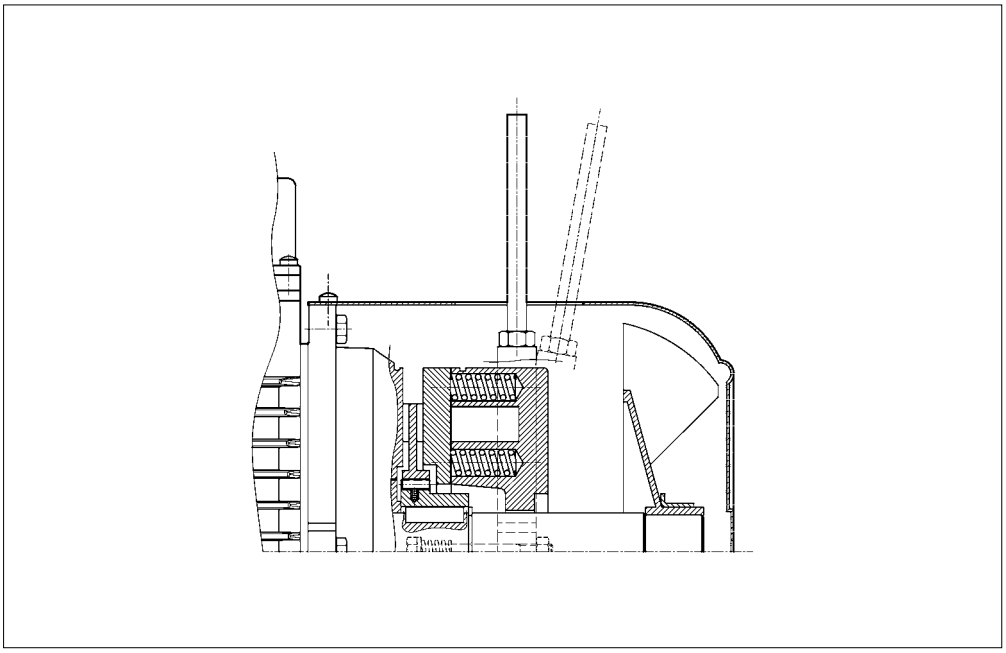

A return spring brings the release lever back in the original position.

(F45)

RM

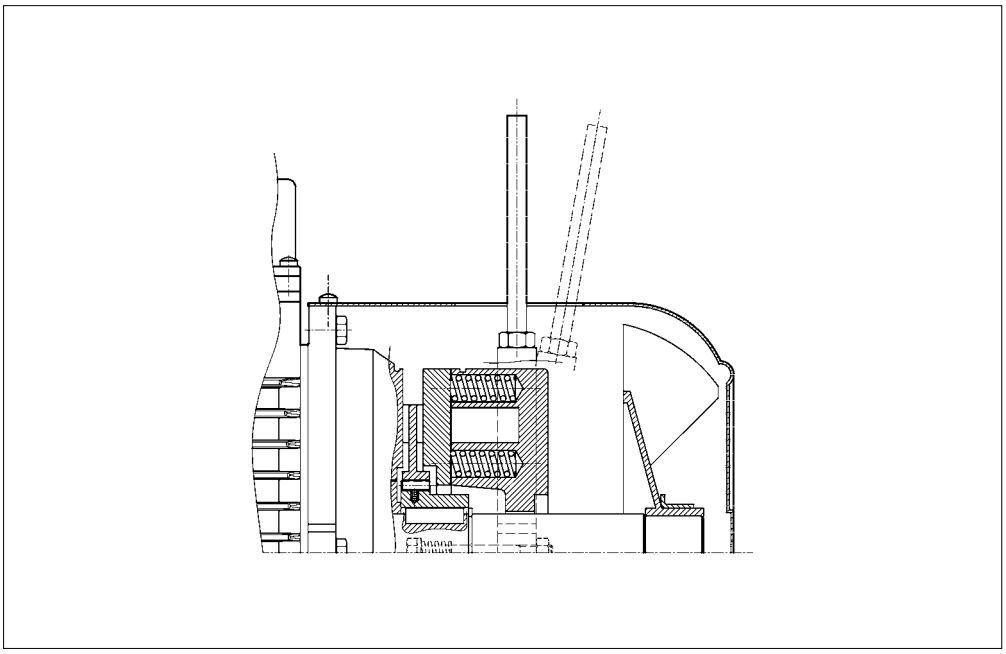

On brake motors type FD, if the option RM is specified, the release device may be locked in the ”release” position by tightening the lever until its end becomes engaged with a brake housing projection.
The availability for the various disengagement devices is charted here below:

(F46)

	R	RM
BX_FD **BE_FD** **BN_FD**	**BX 63 ... BX 180** **BX 200K ... BX 315K** **BE 63 ... BE 180** **BN 63 ... BN 200**	**BX 63 ... BX 132** **BE 63 ... BE 132** **BN 63 ... BN 132** **⛔ FD07**
MX_FD **ME_FD** **M_FD**	**MX05 ... MX5** **ME05 ... ME5** **M05 ... M5**	**MX05 ... MX4** **ME05 ... ME4** **M05 ... M4LA**

M9.1 Release lever orientation

Unless otherwise specified, the release lever is located 90° away from the terminal box – identified by letters [**AB**] in the diagram below – in a clockwise direction on both options **R** and **RM**. Alternative lever positions [**AA**], [**AC**] and [**AD**] are also possible when the corresponding option is specified:

(F47)

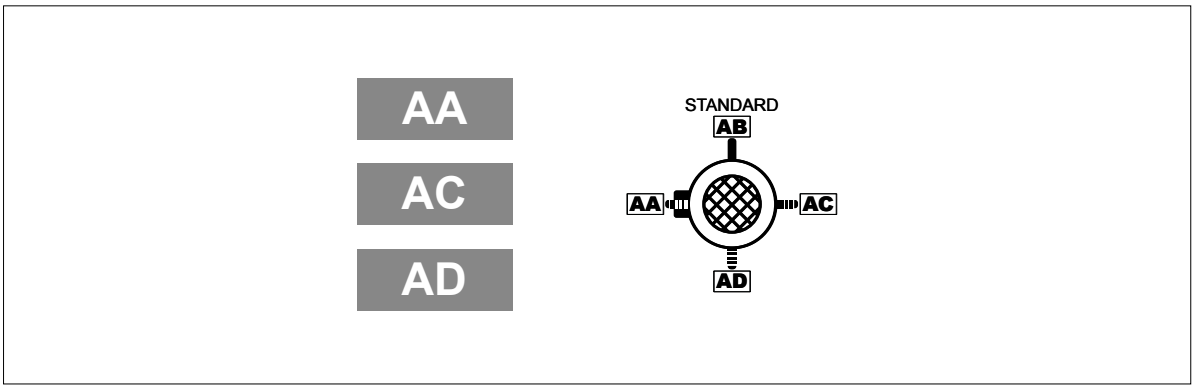

M9.2 Separate brake supply

...SA

Separate AC brake supply
The brake coil is directly powered through an independent line, separated from the motor one.
FD-NB/SB-SA: the rated AC voltage which power the rectifier must be specified. E.G. SA 400 (V AC).

...SD

Separate DC brake supply
The brake coil is directly powered with a DC current and the rectifier is not present.
The rated coil voltage must be specified, E.G. SD 24 (V DC).
Note: for BX...K200 it is not possible to directly feed the brake from the motor terminal box, it is then necessary to select option SA or SD.

M10 BRAKE MOTORS - DIRECT CURRENT HIGH PERFORMANCE BRAKE FOR BXN | MXN

Asynchronous brake motors

Standard electric motors can be equipped with a brake thus creating a self-braking unit. The brake helps in situation where it is necessary a quickly and safely stop of the machine.
All brakes are designed for fail-safe operation: the braking torque is applied by spring action whenever the power supply is interrupted, ensuring maximum safety.

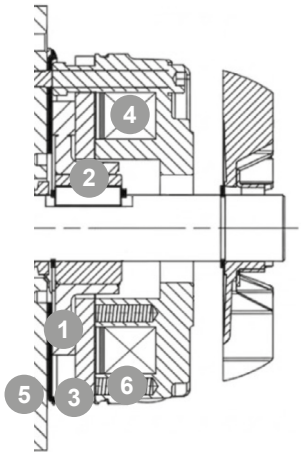

Key:

1. Brake disc
2. Disc carrier
3. Pressure plate
4. Brake coil
5. Motor rear shield
6. Brake springs

In the event of a power failure, pressure springs push the armature plate against the brake disc.
The disc is trapped between the armature plate and the motor shield, effectively stopping shaft rotation.
When the coil is energized, a magnetic field, strong enough to overcome the spring force, attracts the armature plate.
This releases the brake disc, which is integral with the motor shaft, allowing it to rotate freely.

Brake type selection

FDD series brakes are engineered for applications requiring high precision, low noise, and customizable response times, from smooth engagement to high-dynamic performance.

Cases	Motor power supply	Brake coil power supply	Brake power supply designation	Braking system
1	CA	Dedicated AC	SA	FDD + rectifier
2		Dedicated DC	SD	FDD

Direct connection is feasible by selecting an SA motor supply. Customers must manage the wiring and ensure motor/brake voltage compatibility

M10.1 Brake type

FDD

High-performance DC brake type

EVOX motors are equipped with FDD series DC spring-applied electromagnetic brakes.
The brake assembly is bolted directly onto the motor rear shield for maximum compactness. A steel hub with an integrated anti-vibration device is shrunk onto the motor shaft, allowing the brake disc to slide axially with minimal noise and wear.

FDD brakes are engineered for high-performance operation, ensuring reliable torque and safe energy dissipation during both static holding and high-energy dynamic braking.
They ensure high dynamic response and low-noise operation, making them ideal for demanding industrial environments.
Operating characteristics can be optimized by selecting from the available NR or SR rectifier options and various wiring configurations to achieve the perfect balance between response time and energy efficiency.

IP55

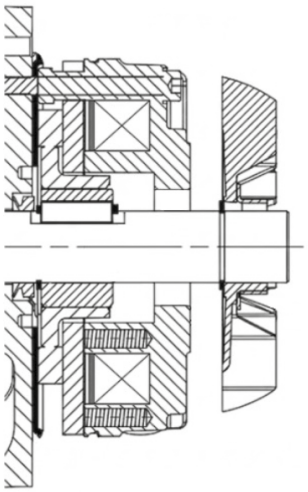

IP56

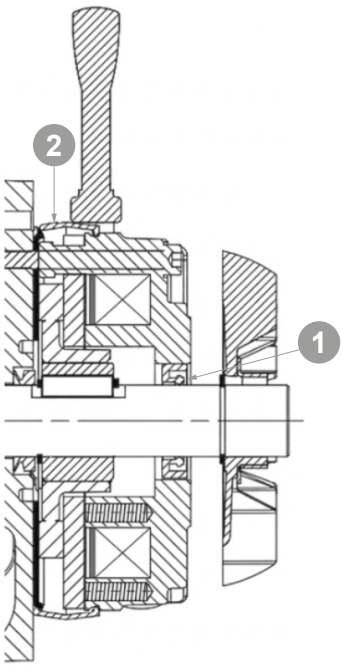

BXN, MXN and MNN brake motors comes with an IP55 protection degree as standard and it is possible to configure them with an IP56 as an option.
If IP56 is selected, the following construction variants will be applied:

1. Oil seal at N.D.E. of motor shaft
2. Dust and waterproof rubber seal

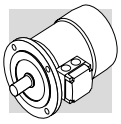

M10.2 Separate brake supply

SA

Brake AC separate power supply
The brake rectifier is powered through an independent AC line, separate from the motor power supply.
FDD - NR/SR - SA: The rated AC voltage for the rectifier must be specified (e.g., SA 400 V AC).

SD

Brake DC separate power supply
The brake coil is directly powered with DC current. In this configuration, the rectifier is not present.
The rated coil voltage must be specified (e.g., SD 24 V DC).

M10.3 Brake supply

230

FDD brake power supply
A rectifier installed inside the terminal box feeds the DC brake coil. Wiring between the rectifier and the brake coil is provided as factory standard.
The rectifier is typically supplied as a separate circuit to ensure compatibility with inverter-fed applications and different control logic. Connection to the motor terminal board (direct supply) can be performed by the user if required, provided the voltage levels are compatible.
Brake power supply voltage is specified in the following table and is independent of the mains frequency:

FDD-SD brake supply voltages

Motor size	Motor supply	Braking system supply	Voltage (V CC)
BXN 63 … BXN 132 MXN 05 ... MXN 40	More options depending on the chosen winding	The brake coil is directly powered with DC	24
			48
			180
			205

Configurable for motors with 50HZ and 60HZ power supply.

FDD-SA brake supply voltages

Motor size	Motor supply	Braking system supply	Voltage (V AC)
BXN 63 … BXN 132 MXN 05 ... MXN 40	More options depending on the chosen winding and frequency	The brake rectifier is powered with a separate AC	110
			115
			120
			127
			200
			208
			220
			230
			240
			330
			380
			400
			415
			440
			460
			480
			360-500

Configurable for motors with 50HZ and 60HZ power supply.

M10.4 AC/DC rectifier type

The FD brake coil can be directly fed with DC current or by an AC/DC connection through a rectifier. A rectifier is a circuit that converts the Alternating Current (AC) input power into the Direct Current (DC) output power required by the brake coil (VDC ~ 0.45 * VAC or VDC ~ 0.9 * VAC).
EVOX motors are available in versions NR and SR, as detailed below:

		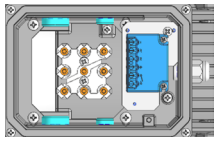	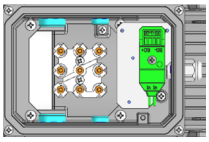
Motor size	**Brake size**	**Standard variant [NR]**	**Option variant [SR]**
BXN 63	FDD06S	Standard setup 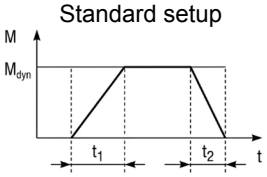 Jumper/Contact setup 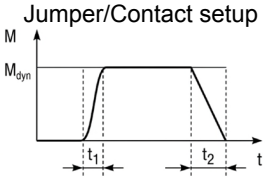	Standard setup 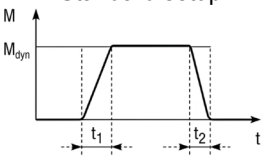
BXN 71	FDD06		
BXN 80	FDD08		
BXN 90	FDD10		
BXN 100	FDD12		
BXN 112	FDD14		
BXN 132	FDD16		

Operating/switching times of the spring-applied brakes
t_1 Engagement time
t_2 Disengagement time (up to M = 0.1 M_{dyn})
M_{dyn} Braking torque at a constant speed of rotation

Schematic diagrams simplified for clarity to provide an insight into the brake's operating logic. For detailed technical data, please refer to the *Brake Performance chapter.*

NR

Standard Rectifiers

The NR is the standard bridge/half-wave rectifier used to provide the correct DC voltage to the brake coil based on the available AC mains supply.

- Fast Switching: It features a dedicated terminal for an external contact to implement a DC-side interruption (fast turn-off). This is essential for reducing braking response times in lifting applications or emergency stops.
- Compliance: cURus certified for voltages up to 270V AC. For higher voltages, the URus certified version is available.

SR

High-Performance Electronic Rectifier

The SR is an electronic overexcitation rectifier designed for high-dynamic applications. It optimizes brake performance through an intelligent current setup.

- Efficiency & Reliability: The electronic control optimizes the current setup (overexcitation), reducing thermal stress on the coil and allowing for high switching frequencies.
- Global Standard: Fully cURus certified across the entire supported voltage range, ensuring seamless global compliance.

M10.5 Performance Table - FDD DC Brake [metric]

(F48)

Brake	Brake torque [Mb]									NR				NR - fast off				SR - fast off				W_{max}			W	Pb
										t_{11}	t_{12}	t_1	t_2	t_{11}	t_{12}	t_1	t_2	t_{11}	t_{12}	t_1	t_2	10 s/h	100 s/h	1000 s/h		
	[Nm]									[ms]				[ms]				[ms]				[kJ]			[MJ]	[W]
FDD06S	1	1.3	1.6	2	2.6	3.3	-	-	-	84	196	280	45	15	13	28	45	45	13	58	36	3.0	1.6	0.2	34	20
FDD06	1.6	2	2.3	2.5	3	3.5	4	4.5	6	84	196	280	45	15	13	28	45	45	13	58	36	3.0	1.6	0.2	34	20
FDD08	3.5	5	6	7	8	9	12	-	-	93	217	310	57	15	16	31	57	45	16	61	46	7.4	3.0	0.4	87	25
FDD10	7	9	11	16	23	-	-	-	-	141	329	470	76	28	19	47	76	58	19	77	61	11.8	4.0	0.5	106	32
FDD12	14	18	23	32	46	-	-	-	-	159	371	530	115	28	25	53	115	58	25	83	92	22.8	6.2	0.7	212	40
FDD14	25	40	55	80	-	-	-	-	-	126	294	420	210	17	25	42	210	47	25	72	168	28.2	7.3	0.8	230	52
FDD16	35	45	55	70	80	100	125	-	-	171	399	570	220	27	30	57	220	57	30	87	176	33.6	8.5	1.0	387	56

[Values calculated for coils with a connection voltage of 205 V DC at rated air gap and 0.7x rated current IN, at 20 °C]

t_{11} = Brake delay time during engagement
t_{12} = Brake rise time of the braking torque
t_1 = Brake engagement time
t_2 = Brake disengagement time (Up to M = 0.1Mdyn)
W_{max} = Max energy per brake operation
W = Braking energy between two successive air gap adjustments
Pb = Brake power absorption at 20°C
Mb = Braking torque (tolerance ±25%)
s/h = starts per hour

Performance Table - FDD DC Brake [imperial]

(F49)

Brake	Brake torque [Mb]									NR				NR - fast off				SR - fast off				W_{max}			W	Pb
										t_{11}	t_{12}	t_1	t_2	t_{11}	t_{12}	t_1	t_2	t_{11}	t_{12}	t_1	t_2	10 s/h	100 s/h	1000 s/h		
	[lb·in]									[ms]				[ms]				[ms]				[lb·ft]			[lb·ft×10^6]	[W]
FDD06S	8.85	11.51	14.16	17.70	23.01	29.21	-	-	-	84	196	280	45	15	13	28	45	45	13	58	36	2213	1180	148	25	20
FDD06	14.16	17.70	20.36	22.13	26.55	30.98	35.40	39.83	53.10	84	196	280	45	15	13	28	45	45	13	58	36	2213	1180	148	25	20
FDD08	30.98	44.25	53.10	61.96	70.81	79.66	106.21	-	-	93	217	310	57	15	16	31	57	45	16	61	46	5458	2176	295	64	25
FDD10	61.96	79.66	97.36	141.61	203.57	-	-	-	-	141	329	470	76	28	19	47	76	58	19	77	61	8703	2950	369	78	31.5
FDD12	123.91	159.31	203.57	283.22	407.13	-	-	-	-	159	371	530	115	28	25	53	115	58	25	83	92	16816	4573	516	156	40
FDD14	221.27	354.03	486.79	708.06	-	-	-	-	-	126	294	420	210	17	25	42	210	47	25	72	168	20799	5384	590	170	51.5
FDD16	309.78	398.28	486.79	619.55	708.06	885.08	1106.34	-	-	171	399	570	220	27	30	57	220	57	30	87	176	24782	6269	701	285	55.5

[Values calculated for coils with a connection voltage of 205 V DC at rated air gap and 0.7x rated current IN, at 70°F]

t_{11} = Brake delay time during engagement
t_{12} = Brake rise time of the braking torque
t_1 = Brake engagement time
t_2 = Brake disengagement time (Up to M = 0.1Mdyn)
W_{max} = Max energy per brake operation
W = Braking energy between two successive air gap adjustments
Pb = Brake power absorption at 70°F
Mb = Braking torque (tolerance ±25%)
s/h = starts per hour

Operating/switching times of the spring-applied brakes

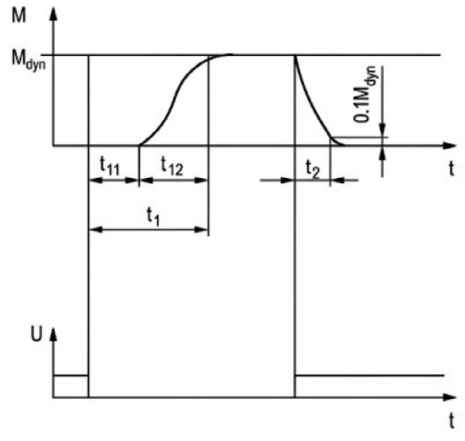

M10.6 FDD brake connection

Whenever a separate brake power supply is required (e.g., for inverter operation), the connection to the rectifier must comply with the brake winding voltage stated on the motor nameplate.
Because of the highly inductive load, contacts used for brake control must belong to usage class AC-3 (for AC line interruption) or DC-13 (for DC line interruption) according to IEC 60947-4-1.

Table (1) – Brake coil with separate power supply and NR rectifier, a.c. line interruption.
Table (2) – Brake coil with separate power supply and NR rectifier, a.c. and d.c. lines interruption.
Table (3) – Brake coil with separate power supply and SR electronic rectifier, with integrated overexcitation and fast switching.

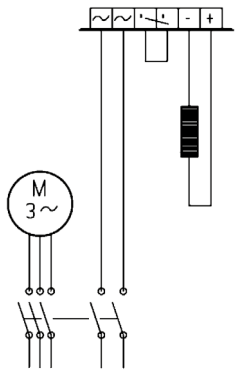

Table (1)
FDD | SA | NR

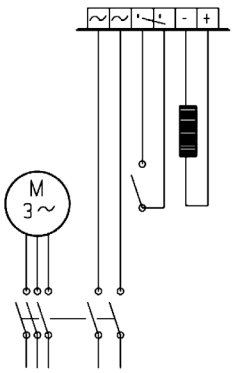

Table (2)
FDD | SA | NR

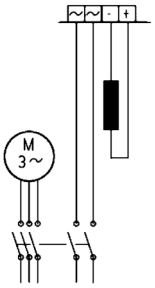

Table (3)
FDD | SA | SR

M10.7 Brake hand release systems

Spring-applied brakes type FDD can be equipped with optional manual release devices. These are used to manually release the brake before servicing any machine or system components driven by the motor.
Availability of the various release devices is indicated below:

	R
BXN_FDD	BXN 63 … BXN 132

R

Lever with return spring
With this options, the return spring brings the release lever back in the original position.

M10.8 Brake hand release lever position

AA

Release lever orientation
Unless otherwise specified, the release lever is located 90° away from the terminal box – identified by letters [AB] in the diagram on the right – in a clockwise direction on both R and RM options.
Alternative lever positions [AA], [AC] and [AD] are also possible when the corresponding option is specified.

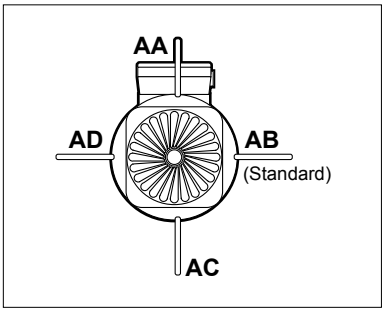

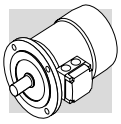

M11 OPTIONS

M11.1 Soft-start / stop

F1

An optional flywheel - option F1 - is available for applications requiring soft starting or stopping. The flywheel's added inertia uses up kinetic energy during starting and returns it back during braking, thus catering for more progressive and gradual shock loads. The optional flywheel is available for brake motors type BN-BE_FD and M-ME_FD with specific characteristics as detailed in the table below:

(F50)

Main data for flywheel of motore type: BN-BE_FD, M-ME_FD					
		Fly-wheel weight		Fly-wheel inertia	
		[Kg]	[lbs]	[Kgm²] × 10^{-4}	[lb·ft²] × 10^{-4}
BN 63 - BE 63	**M05 - ME05**	0,69	1,52	6,3	149,5
BN 71 - BE 71	**M1 - ME1**	1,13	2,49	13,5	320,4
BN 80 - BE 80	**M2 - ME2**	1,67	3,68	27,0	640,7
BN 90 S - BN 90 L - BE 90 S - BE 90 LA	**–**	2,51	5,53	53,0	1.257,7
BN 100 - BE 100	**M3 - ME3**	3,48	7,67	84,0	1.993,4
BN 112 - BE 112	**–**	4,82	10,63	148,3	3.519,2
BN 132 S - BN 132 M - BE 132 S - BE 132 M	**M4 - ME4**	6,19	13,65	258,0	6.122,4

M11.2 Capacitive filter

CF

An optional capacitive filter is available for brake motors type FD only. When the suitable capacitive filter is installed upstream of the rectifier (option CF), motors comply with the emission limits required by standard EN61000-6-3:2007 "Electromagnetic Compatibility – Generic Emission Standard – Part 6-3: Residential, commercial and light industrial environment".
BX≥200LA and BX≥200LAK motors comply with the emission limits required by standard EN 61000-6-3:2007 "Electromagnetic Compatibility - Generic Emission Standard - Part 6-3: residential, commercial and light industrial environment."

M11.3 Thermal protective devices

In addition to the standard protection provided by the magneto-thermal device, motors can be supplied with built-in thermal probes to protect the winding against overheating caused, by insufficient ventilation or by an intermittent duty.
This additional protection should always be specified for servoventilated motors (IC416).

M11.4 Thermistors

E3

These are semi-conductors having rapid resistance variation when they are close to the rated switch off temperature (150°C [302°F]). Variations of the R = f(T) characteristic are specified under DIN 44081, IEC 34-11 Standards. Positive temperature coefficient thermistors are normally used (also known as PTC "cold conductor resistors"). Thermistors cannot control relays directly and must be connected to a suitable disconnect device. Thus protected, three PTCs connected in series are installed in the winding, the terminals of which are located on the auxiliary terminal-board.

K1

The design characteristics of this sub-group of PTC thermistors allow them to be used as positive temperature coefficient sensors with variable resistance.
Functioning temperature range: 0 ... 260 °C [32 ... 500 °F].
Thermistors cannot control relays directly and must be connected to a suitable disconnect device.
Terminals (polarised) for 1 x KTY 84-130 are provided on an auxiliary terminal strip.

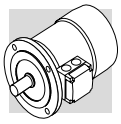

M11.5 Bimetallic thermostates

D3

These types of protective devices house a bimetal disk. When the rated switch off temperature (150°C [302°F]) is reached, the disk switches the contacts from their initial rest position.
As temperature falls, the disk and the contacts automatically return to rest position.
Three bimetallic thermostates connected in series are usually employed, with normally closed contacts. The terminals are located on an auxiliary terminal-board.

M11.6 Temperature sensors

The platinum elements resistance thermometers on the basis of PT100, PT1000 are used everywhere in the industrial temperature measurement where low to medium temperatures are measured.
They offer the advantage of meeting international standards (IEC 751 / DIN EN 60 751), have a good long-term stability, a reliable behaviour over temperature cycles and a wide temperature range as well as a high measurement accuracy and linearity.
The resistance thermometer has a chip for a temperature sensor, the resistance of which changes in relation to temperature according to a series of reproducible basic values. The changes in resistance are transferred as changes in current.

PT100

At 0 °C, the nominal resistance is adjusted to 100 Ω

M11.7 Plug connector

CON

Three types of connectors (CON 1, CON 2, CON 3) are provided; they can be mounted in two different positions: right side of terminal box cover (C1D, C2D, C3D); left side of terminal box cover (C1S, C2S, C3S).
The option CON is applicable to single speed BN and M motors (2, 4, 6, 8 poles), and BX / BE and MX / ME motors on the sizes specified on the following table. All double speed motors are excluded.
The connectors CON 1 / CON 2 are available for BX-BE/MX-ME and BN/M motors without brake and for brakemotors equipped with DC brake type FD, for the motor sizes listed below.
The male connector (with pins) is mounted on the motor, the female connector is not provided. With CON option, the winding connection is always Y.
With option U1 “forced ventilation”, the fan unit supply is available inside the separate terminal box fixed to fan cover. With options EN1...EN6, the encoder connection is made by a cable not connected to the motor plug connector.
The CON option is not applicable to brakemotors equipped with AC brake type FA.
The CON option is not available when at least one of the next options are selected: the U2, CUS, IC.

Specifications

(F51)

Option	**CON 1**
Motor size	**BX 63 ... BX 112 / MX05, MX3 / BE 63 ... BE 112 / ME05 ... ME4** **BN 63 … BN 112 / M05 ... M3**
Connector view	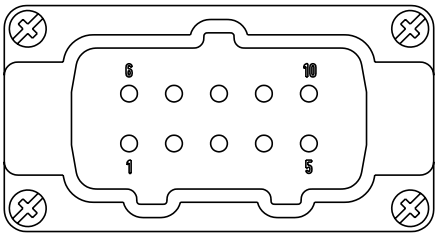
Type of connector	Harting Han 10ES
Housing	Han EMC 10B with 2 levers
Numbers of pins - nominal current	10 x 16A
Voltage	500 Vac
Contact connection	Screw terminals

(F52)

Option	**CON 2**
Motor size	**BX 63 ... BX 132 / MX05, MX3 / BE 63 ... BE 132 / ME05 ... ME4** **BN 63 … BN 160MR / M05 ... M4**
Connector view	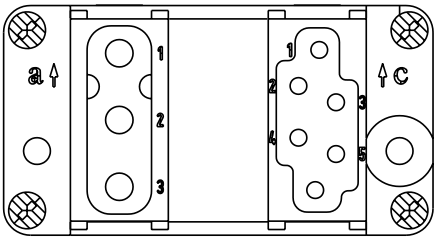
Type of connector	Harting Han Modular
Housing	Han EMC 10B with 2 levers
Module type	Module C + Module E + Module E
Numbers of pins - nominal current	3 x 36A / 6 x 16A
Voltage	500 Vac
Contact connection	Crimping contacts

(F53)

Option	**CON 3**
Motor size	**BX 63 ... BX 132M / MX05, MX3 / BE 63 ... BE 132 / ME05 ... ME4 /** **BN 63 … BN 160MR / M05 ... M4**
Connector view	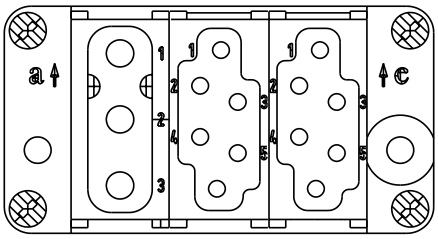
Type of connector	Harting Han Modular
Housing	Han EMC 10B with 2 levers
Module type	Module C + Module E + Module E
Numbers of pins - nominal current	3 x 36A / 6 + 6 x 16A
Voltage	500 Vac
Contact connection	Crimping contacts

(F54)

Connector orientation

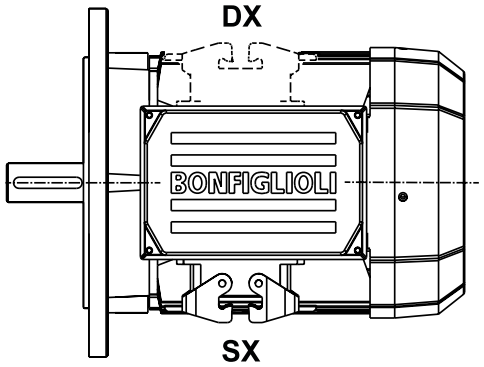

(F55)

Connector related dimensions

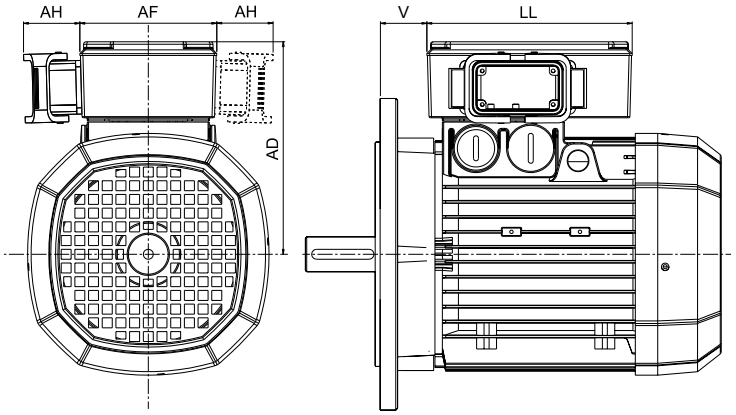

		AD		AF		AH		LL		V(*)	
		[mm]	[inch]	[mm]	[inch]	[mm]	[inch]	[mm]	[inch]	[mm]	[inch]
BX 63 - BE 63 - BN 63	**MX05 - ME05 - M05**	136	5.354	110	4.331	45	1.772	165	6.496	4.5	0.177
BX 71 - BE 71 - BN 71	**MX1 - ME1 - M1**	149	5.866							15.5	0.610
BX 80 - BE 80 - BN 80	**MX2 - ME2 - M2**	160	6.299							16.5	0.650
BX 90 - BE 90 - BN 90	**MX3**	162	6.378							31.5	1.240
BX 100 - BE 100 - BN 100	**MX3 - ME3 - M3**	171	6.732							37.5	1.476
BX 112 - BE 112 - BN 112	**MX4**	186	7.323							39	1.535
BX 132 - BE 132 - BN 132	**MX4 - ME4 - M4**	210	8.268	140	5.512				7.402	45.5	1.791
BN 160MR	**–**									161	6.339

(*) Dimension valid only for IEC motors BX, BE and BN.

M11.8 Control of brake operation

This variant specifies the presence of electromechanical sensors designed to provide real-time feedback on the brake's condition.

MSW

The microswitch can be set in order to obtain from it a signal related to the attraction/release of anchor plate, or it can be set in order to give feedback when the air gap reaches the maximum value.

MSW option is available for brakes FD03...FD09.

The microswitch is provided with three lead wires (NC, NO, COM). The next figure shown the main components of the brake equipped with microswitch.

(F56)

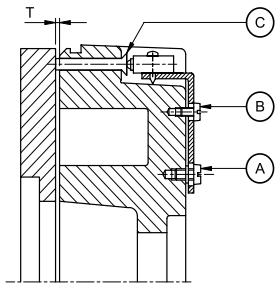

A: Plate f xing screws
B: Setting screws
C: Actuator control pin

MRM

This variant enable the brake release monitoring. It reads the position of the armature plate to confirm if the brake is physically Engaged or Released. All standard braking torque are available.



BXN size	Brake size	MRM Release monitoring
63	FDD 06S	
71	FDD 06	
80	FDD 08	
90	FDD 10	•
100	FDD 12	•
112	FDD 14	•
132	FDD 16	•

MWM

This variant enable the brake wear monitoring. It Monitors the Air Gap width. It triggers a signal when the gap exceeds the maximum tolerance due to friction material consumption, indicating that maintenance or adjustment is required.



BXN size	Brake size	MWM Wear monitoring
63	FDD 06S	
71	FDD 06	
80	FDD 08	
90	FDD 10	
100	FDD 12	•
112	FDD 14	•
132	FDD 16	•

Brake torque available on MWM

		1 x T_Mot		2 x T_Mot	
		[Nm]	[lb-in]	[Nm]	[lb-in]
BXN 100 LA	BFK 12	14	123.9	32	283.2
BXN 100 LB	BFK 12	18	159.3	46	407.1
BXN 112 M	BFK 14	25	221.3	55	486.8
BXN 132 S	BFK 16	35	309.8	70	619.6
BXN 132 M	BFK 16	45	398.3	100	885.1

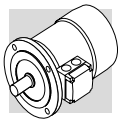

M11.9 Additional cable entry for brakemotors

IC

The terminal box cover of brakemotors BN 63 ... BN 160MR - M05 ... M4L is provided with two additional cable entry M16 x 1.5 (one cable entry per side).
The terminal box cover of brakemotors BN 160 ... BN 200 - M5 is provided with an additional cable entry M16 x 1.5 next to the cable entry used for the brake.

M11.10 Anti-condensation heaters

H1 **NH1**

Where an application involves high humidity or extreme temperature fluctuation, motors may be equipped with an anti-condensate heater.
A single-phase power supply is available in the auxiliary terminal board inside the main terminal box.
Values for the absorbed power are listed here below:

(F58)

	H1 **1~ 230V ± 10% P [W]**	NH1 **1~ 115V ± 10% P [W]**
BX 63 ... BX 80 BE 63 ... BE 80 BN 56 ... BN 80	10	10
BX 90 ... BX 132 BE 90 ... BE 132MB BN 90 ... BN 160MR	25	25
BX 160...BX 180 BX 200K ... BX 250K BE 160, BE 180 BN 160, BN 200	50	50
BY 280K BX 280K	60	60
BY 315K ... BY 355K BX 315K ... BX 355K	120	120

Warning!
Always remove power supply to the anti-condensante heater before operating the motor.

M11.11 Tropicalization

TP

When option **TP** is specified, motor windings receive additional protection for operation in high humidity and temperature conditions.

M11.12 Second shaft extension

PS

This option is not compatible with variants RC, TC, U1, U2, EN1, EN2, EN3, EN4, EN5, EN6, EN7, EN8.
For shaft dimensions please see motor dimensions tables.

(F57)

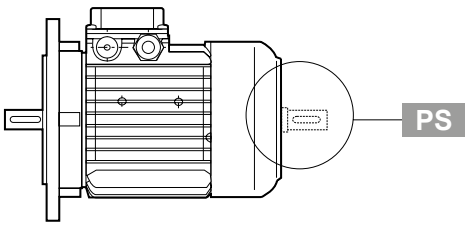

M11.13 Backstop device

AL **AR**

For applications where backdriving must be avoided, motors equipped with an anti run-back device can be used (available for the MX/ME and M series only). While allowing rotation in the direction required, this device operates instantaneously in case of a power failure, preventing the shaft from running back. The anti run-back device is life lubricated with special grease for this specific application. When ordering, customers should indicate the required rotation direction, AL or AR.
Never use the anti run-back device to prevent reverse rotation caused by faulty electrical connection. Table (F62) shows rated and maximum locking torques for the anti run-back devices. A diagram of the device can be seen in Table (F63). Overall dimensis are same as the corresponding brake motor. The direction of free rotation is described in the “MOTOR OPTIONS” section of specifically dedicated sections to gear units.

(F59)

	Rated locking torque		Max. locking torque		Release speed
	[Nm]	[lb·in]	[Nm]	[lb·in]	[rpm] or [min^{-1}]
MX1 - ME1 - M1	6	53	10	90	750
MX2 - ME2 - M2	16	140	27	240	650
MX3 - ME3 - M3	54	480	92	815	520
MX4 - ME4 - M4	110	970	205	1.815	430

(F60)

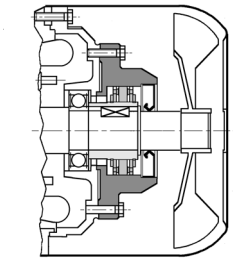

The direction of free rotation allowed for AR and AL option is shown below:

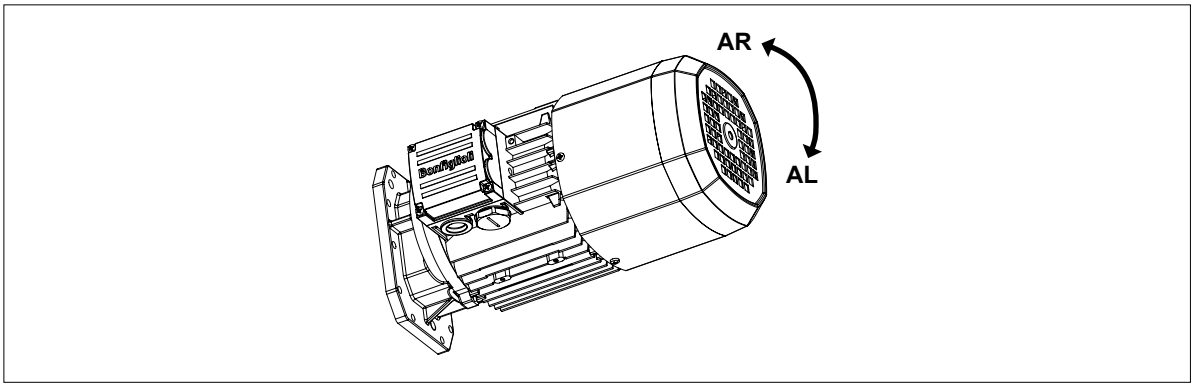

M11.14 Rotor balancing

RV

Where low noise is a priority requirement, the option RV ensures reduced vibration in accordance with vibration class B.
The table below reports effective velocity of vibration for normal (A) and B grade balancing.

(F61)

Motor Range	Vibration level	Angular velocity	Limits of the vibration velocity	
		[rpm] or [min^{-1}]	[mm/s]	[in/s]
BX 132 ≤ H ≤ BX 180L **BE 80 ≤ H ≤ BE 180L** **BN 56 ≤ H ≤ BN 200B**	A	600 < n < 3600	1.60	0.06
	B		0.70	0.03

Values are obtained from measurements on freely suspended motor during noload operation; tolerance ±10%.

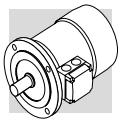

M11.15 Ventilation

Motors are cooled through outer air blow (IC 411 according to CEI EN 60034-6) and are equipped with a plastic radial fan, which operates in both directions.
Ensure that fan cover is installed at a suitable distance from the closest wall so to allow air circulation and servicing of motor and brake, if fitted.
Motor is cooled by an axial fan with independent power supply and fitted on the fan cover (IC 416 cooling system).
This version is used in case of motor driven by inverter so that steady torque operation is possible even at low speed or when high starting frequencies are needed.
Brake motors of motors with rear shaft projection (PS option) are excluded.
This variant has two different models, called U1 and U2, having the same longitudinal size. Longer side of fan cover (DL) is specified for both models in the table below. Overall dimension can be reckoned from motor size table.

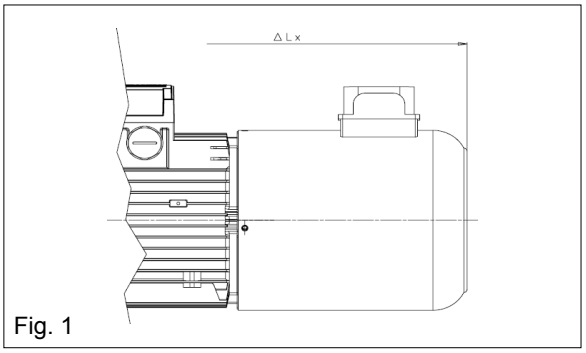

Fig. 1

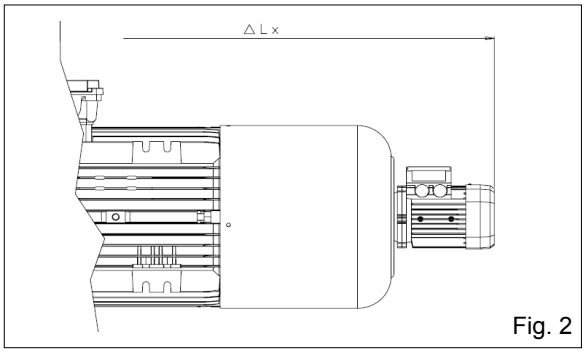

Fig. 2

(F62)

Extra length for servoventilated motors						
		**Δ L_1**	**Δ L_2**	**Δ L_3**	**Δ L_4**	
BX 71 - BE 71 - BN 71	**MX 1 - ME 1 - M 1**	91	30	91	65	**Fig. 1**
BN 80 - BE 80	**M 2 - ME 2**	125	54	125	79	
BX 80 (1)	**MX 2** (1)	80	67	80	67	
BN 90 - BE 90 - BX 90	**MX 2** (2)	132	49	132	85	
BN 100 - BE 100	**M 3 - ME 3**	117	29	117	89	
—	**MX 3SA - MX 3SB**	117	88	117	88	
BX 100	**MX 3LA - MX 3LB**	135	88	135	88	
BN 112 - BE 112	**—**	127	33	127	83	
BX 112	**—**	136	90	136	90	
BN 132 - BE 132 - BN 160MR	**M 4 - ME 4**	158	51	158	122	
BE 132MB	**M 4LC - ME 4LB**	123	27	123	98	
BX 132SB (1)	**MX 4SA - MX 4SB** (1)	158	142	158	122	
BX 132MA (1)	**MX 4LA** (1)	125	118	98	118	
BX 132 (2)	**MX 4LA** (2) **- MX 4SB** (2)	171	83	171	100	
BN 160 - BE 160	**M 5 - ME 5**	181	181	253	211	**Fig. 2**
BX 160	**MX 5**	315	211	249	211	
BN 180M	**—**	181	181	253	211	
BN 180L - BE 180 - BN 200	**—**	181	181	263	211	
BX 180	**—**	341	201	263	201	
BX 200K	**—**	260	260	385	440	
BY 225K - BY 250K **BX 225K - BX 250K**	**—**	320	320	405	386	
BY 280K - BY 315K **BX 280K - BX 315K**	**—**	430	430	580	460	
BY 355K **BX 355K**	**—**	640	640	775	640	

ΔL_1 = Standard motor + U1 - delta compared to STD.
ΔL_2 = Brakemotor + U1 - delta compared to FD.
ΔL_3 = Standard motor + Encoder + U1 - delta compared to STD.
ΔL_4 = Brakemotor + Encoder + U1 - delta compared to FD.

(1) = no CUS no NBR.
(2) = CUS or NBR

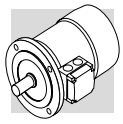

U1

Fan wiring terminals are housed in a separate terminal box.
In brake motors of size BX 71 ... BX 160 - BE 71 ... BE 160 - BN 71 ... BN 160MR, MX1 - MX5 - ME1 ... ME5 - M1 ... M5 with **U1** model, the release lever cannot be positioned to AA.
This option can be selected for motors compliant with CSA and UL standards (CUS option), only for BX ≥ 200K.

(F63)

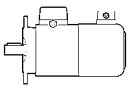

		**V a.c.** ±10%	**Hz**	**P** [W]	**I** [A]
BX 71 - BE 71 - BN 71	**MX1 - ME1 - M1**	1 ~ 230	50 / 60	22	0.12
BX 80 - BE 80 **BN 80**	**MX2 - ME2** **M2**			22	0.12
BX 90 - BE 90 **BN 90**	**–**			40	0.30
BX 100 - BE 100 **BN 100**	**MX3 - ME3** **M3**			50	0.25
BX 112 - BE 112 **BN 112**	**–**	3 ~ 230Δ / 400Y		50	0.26 / 0.15
BX 132 - BE 132 **BN 132 ... BN 160MR**	**MX4 - ME4** **M4L**			110	0.38 / 0.22
BX 160 - BE 160 **BN 160M ... BN 180M**	**MX5 - ME5** **M5**		50	180	1.23 / 0.71
BX 180 - BE 180 **BN 180L ... BN 200L**	**–**			250	1.39 / 0.80
BX 200K ... BX 250K	**–**	3 ~ 400Δ / 690Y		250	0.64
BY 280K .. BY 315K **BX 280K ... BX 315MK**	**–**			750	1.7
BY 315K .. BY 355K **BX 315LK ... BX 355SK**	**–**			1500	3.3
BY 355K **BX 355MK**	**–**			3000	6.1

U2

Fan terminals are wired in the motor terminal box.
The **U2** option does not apply to motors BX, BE, MX, ME and to motors with option CUS (compliant to norms CSA and UL).

(F64)

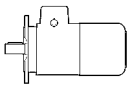

		**V a.c.** ±10%	**Hz**	**P** [W]	**I** [A]
BN 71	**M1**	1 ~ 230	50 / 60	22	0.12
BN 80	**M2**			22	0.12
BN 90	**–**			40	0.30
BN 100	**M3**	3 ~ 230Δ / 400Y		40	0.26 / 0.09
BN 112	**–**			50	0.26 / 0.15
BN 132 ... BN 160MR	**M4L**			110	0.38 / 0.22

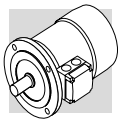

M11.16 Rain canopy

RC

The rain canopy protects the motor from dripping and avoids the ingress of solid bodies. It is recommended when motor is installed in a vertical position with the shaft downwards.
Relevant dimensions are indicated in the table below.
The drip cover is not compatible with variants PS, EN1, EN2, EN3, EN4, EN5, EN6.

(F65)

		AQ		ΔV	
		[mm]	[in]	[mm]	[in]
BX 63 - BE 63 - BN 63	**MX 05 - ME 05 - M 05**	118	4.65	24	0.94
BX 71 - BE 71 - BN 71	**MX1 - ME1 - M1**	134	5.28	27	1.06
BX 80 - BE 80 BN 80	**MX2 - ME2 M2**	152	5.98	25	0.98
BX 90 - BE 90 BN 90	**—**	168	6.61	30	1.18
BX 100 - BE 100 BN 100	**MX3 - ME3 M3**	190	7.48	28	1.10
BX 112 - BE 112 BN 112	**—**	211	8.31	32	1.26
BX 132 - BE 132 BN 132 ... BN 160MR	**MX4 - ME4 M4**	254	10.00	32	1.26
BX 160 - BE 160 BN 160M ... BN 180M	**MX5 - ME5 M5**	302	11.89	36	1.42
BX 180 - BE 180 BN 180L ... BN 200L	**—**	340	13.39	36	1.42
BX 200K	**—**	423	16.65	55	2.17
BX 225K	**—**	465	18.31	55	2.17
BX 250K	**—**	514	20.24	55	2.17
BX 280K BY 280K	**—**	567	22.32	100	3.94
BX 315K BY 315K	**—**	645	25.39	100	3.94
BX 355K BY 355K	**—**	740	29.13	120	4.72

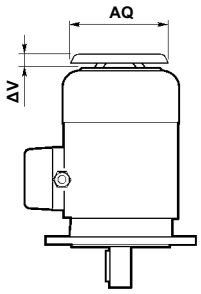

For RC/TC on BXN/MXN motors see the scheme below.

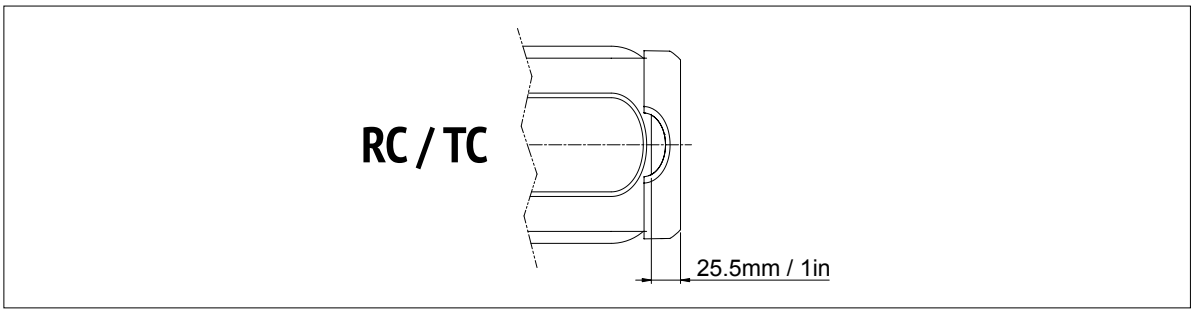

M11.17 Textile canopy

TC

Option TC is a cover variant for textile industry environments, where lint may obstruct the fan grid and prevent a regular flow of cooling air.
This option is not compatible with variants EN1, EN2, EN3, EN4, EN5, EN6, PS, U1, U2.
Overall dimensions are the same as drip cover type RC.
TC option is not available for BX and BY motors.

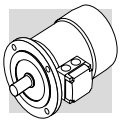

M11.18 Feedback units

Motors may be combined with six different types of encoders to achieve feedback circuits.
Configurations with double-extended shaft (PS) and rain canopy (RC, TC) are not compatible with encoder installation.

EN1 Incremental encoder, V_{IN} = 5 V, line-driver output RS 422.

EN2 Incremental encoder, V_{IN} = 10-30 V, line-driver output RS 422.

EN3 Incremental encoder, V_{IN} = 12-30 V, push-pull output 12-30 V

EN4 Encoder sin/cos, V_{IN} = 4.5-5.5 V, output Sinus 0.5VPP.

EN5 Absolute encoder singleturn, HIPERFACE® interface, V_{IN} = 7-12 V.

EN6 Absolute encoder multiturn, HIPERFACE® interface, V_{IN} = 7-12 V.

EN7 Incremental encoder Heavy Duty, V_{IN} = 12-30 V, push-pull output 12-30 V.

EN8 Incremental encoder Heavy Duty, V_{IN} = 12-30 V, push-pull output 9-30 V.

Note: EN7 and EN8 available only for BY ≥ 280K and BX ≥ 200K

(F66)

	EN1	EN2	EN3	EN4	EN5	EN6	EN7	EN8
Interface	TTL/RS 422	TTL/RS 422	HTL push-pull	Sinus 0.5 VPP	HIPERFACE®	HIPERFACE®	HTL push-pull	HTL push-pull
Power supply voltage [V]	4...6	10...30	12...30	4.4...5.5	7...12	7...12	9...30	
Output voltage [V]	5	5	12...30	—	—	—	9...30	
No-load operating current [mA]	120	100	100	40	80	80	80	
No. of pulses per revolution	1024							2048
Steps per revolution	—	—	—	—	15 bit	15 bit	-	-
Revolutions	—	—	—	—	—	12 bit	-	-
No. of signals	6 (A, B, Z + inverted signals)			6 (cos-, cos+, sin-, sin+, Z, $\overline{Z}$)	—	—	6	6
Max. output frequency [kHz]	600			200			200	
Max. speed [min^{-1}]	6000 (9000 min^{-1} for 10 s)						6000	
Temperature range [°C]	-30 ... +100						-20 ... +85	
Temperature range [°F]	-22 °F ... +212 °F						-4 °F ... +185 °F	
Protection class	IP 65						IP67	

(F67)

EN1, EN2, EN3, EN4, EN5, EN6, EN7, EN8			
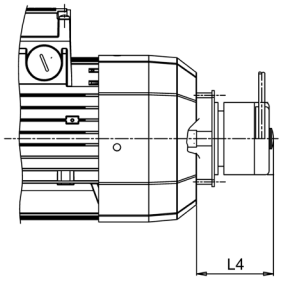			
Motor Type		**L4**	
IEC	**Compact**	**[mm]**	**[in]**
BN 63 … BN 200	**M05 ... M5**	65	2.56
BE 63… BE180	**ME05 ... ME5L**	65	2.56
BX 63 … BX 180	**MX05 ... MX5L**	65	2.56
BY 280K **BX 200K ... BX 280K**	**—**	100	3.94
BY 315K ... BY 355K **BX 315K ... BX 355K**	**—**	100	3.94

If the encoder variant (option EN_) is specified on motors along with the independent fan cooling (options U1, U2), the extra length of motor is coincident with the one present in catalogue chapter M12.15.

For EN variant on BXN/MXN motor series see the scheme below.

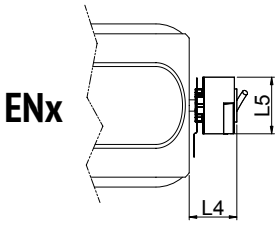

Motor Type		L4		L5	
IEC	**Compact**	**[mm]**	**[in]**	**[mm]**	**[in]**
BXN 63 ... BXN 132	**MXN05 ... MXN40**	50.5	1.99	60	2.36

M11.19 EC - Encoder canopy

EC

Option EC is a cover variant specifically made for our encoders. It protects them from impacts and may help in prolonging their productive life.

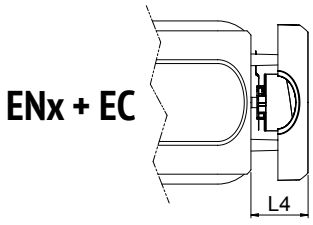

Motor Type		L4	
IEC	**Compact**	**[mm]**	**[in]**
BXN 63 ... BXN 132	**MXN05 ... MXN40**	60.5	2.38

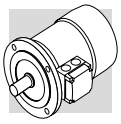

M11.20 Insulated Bearings

IB

When IB option is selected the motor is equipped with insulated bearings at drive end. This prevent early bearings failures due to high frequency circulation currents.
NOTE: This option is available only for BY...K ≥ 280 and BX...K ≥ 280, and it is mandatory when the motor is operated through a variable speed drive.

M11.21 Vertical Mounting

VM

NOTE: This option is mandatory for BY...K ≥ 280 and BX...K ≥ 200, when vertically mounted.
When VM is selected the motor is delivered with specific arrangements.
Furthermore, the vertical mounting position will also be reported on motor nameplate.

M11.22 Surface protection

C_

When no specific protection class is requested, the painted (ferrous) surfaces of motors are protected to at least corrosivity class C2 (UNI EN ISO 12944-2). For improved resistance to atmospheric corrosion, motors can be delivered with C3 and C4 surface protection.

(F68)

SURFACE PROTECTION	Typical environments	Maximum surface temperature	Corrosivity class according to UNI EN ISO 12944-2
C3	Urban and industrial environments with up to 100% relative humidity (medium air pollution)	120°C [248 F°]	C3
C4	Industrial areas, coastal areas, chemical plant, with up to 100% relative humidity (high air pollution)	120°C [248 F°]	C4
C5M	Coast and offshore areas with high salt content.	120°C [248 F°]	C5M

Motors with optional protection to class C3 or C4 are available in a choice of colours. If no specific colour is requested (see the “PAINTING” option) motors are finished in RAL 7042 for BN/M, BE/ME and BX≤180/MX and in Munsell blue 8B 4.5/3.25 for BX...K ≥ 200 and BY...K ≥ 280.
Motors can also be supplied with surface protection for corrosivity class C5 according to UNI EN ISO 12944-2. Contact our Technical Service for further details.

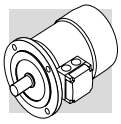

M11.23 Painting

RAL

Gearboxes with optional protection to class C3 or C4 are available in the colours listed in the following table.

(F69)

PAINTING	Colour	RAL number
RAL7042*	Traffic Grey A	7042
RAL5010	Gentian Blue	5010
RAL9005	Jet Black	9005
RAL9006	White Aluminium	9006
RAL9010	Pure White	9010
Munsell blue 8B* 4.5/3.25	Blue	MUNSELL 8B 4.5/3.25
RAL7035	Light Grey	7035
RAL7001	Silver Grey	7001
RAL5015	Sky Blue	5015
RAL7037	Dusty Grey	7037
RAL5024	Pastel Blue	5024

* BX...K ≥ 200 and BY...K ≥ 280 Motors are standardly supplied in this colour with C3 protection unless specified diffrently.

NOTE – “PAINTING” options can only be specified in conjunction with “SURFACE PROTECTION” options.

M11.24 Certificates

ACM

Certificate of compliance of motors
The document certifies the compliance of the product with the purchase order and the construction in conformity with the applicable procedures of the Bonfiglioli Quality System.

Note: Not available for BX...K≥200 and BY...K≥280

CC

Inspection certificate
The document entails checking on order compliance, the visual inspection of external conditions and instrumental testing of the electrical characteristics in unloaded conditions. Units inspected are sampled within the shipping batch and marked individually.

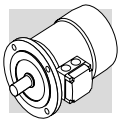

M12 TABLES OF MOTORS CORRELATION

M12.1 50 Hz Motors

(F71)

2 pole							
Efficiency class		IE1	IE2	IE3	IE1	IE2	IE3
Pn [kW]	0.06						
	0.09						
	0.12						
	0.18	BN 63A 2			M 05A 2		
	0.25	BN 63B 2			M 05B 2		
	0.37	BN 71A 2			M 05C 2		
	0.55	BN 71B 2			M 1SD 2		
	0.75	BN 71C 2	BE 80A 2		M 1LA 2	ME 2SA 2	
		BN 80A 2					
	1.1	BN 80B 2	BE 80B 2		M 2SA 2	ME 2SB 2	
	1.5	BN 90SA 2	BE 90SA 2		M 2SB 2		
	1.85	BN 90SB 2					
	2.2	BN 90L 2	BE 90L 2		M 3SA 2		
	3	BN 100L 2	BE 100L 2		M 3LA 2	ME 3LB 2	
	4	BN 112M 2	BE 112M 2		M 3LB 2		
	5.5	BN 132SA 2	BE 132SA 2		M 4SA 2	ME 4SA 2	
	7.5	BN 132SB 2	BE 132SB 2		M 4SB 2	ME 4LA 2	
	9.2	BN 132M 2	BE 132MB 2		M 4LA 2	ME 4LB 2	
	11	BN 160MR 2	BE 160MA 2		M 4LC 2	ME 5SA 2	
		BN 160M 2					
	15	BN 160MB 2	BE 160MB 2		M 5SB 2	ME 5SB 2	
	18.5	BN 160L 2	BE 160L 2		M 5SC 2	ME 5LA 2	
	22	BN 180M 2			M 5LA 2		
	30	BN 200LA 2					

(F70)

4 pole								
Efficiency class		IE1	IE2	IE3	IE4	IE1	IE2	IE3
Pn [kW]	0.06	BN 56A 4						
	0.09	BN 56B 4				M 0B 4		
	0.12	BN 63A 4	BE 63A 4	BX 63A 4		M 05A 4	ME 05A 4	MX 05A 4
	0.18	BN 63B 4	BE 63B 4	BX 63B 4		M 05B 4	ME 05B 4	MX 05B 4
	0.25	BN 63C 4		BX 63C 4		M 05C 4		BX 1SA 4
		BN 71A 4	BE 71A 4	BX 71A 4			ME 1SA 4	
	0.37	BN 71B 4	BE 71B 4	BX 71B 4		M 1SD 4	ME 1SB 4	BX 1SB 4
	0.55	BN 71C 4				M 1LA 4		BX 2SA 4
		BN 80A 4	BE 80A 4	BX 80A 4			ME 2SA 4	
	0.75	BN 80B 4	BE 80B 4	BX 80B 4		M 2SA 4	ME 2SB 4	MX 2SB 4
	1.1	BN 80C 4				M 2SB 4	ME 3SA 4	MX 3SA 4
		BN 90S 4	BE 90S 4	BX 90S 4				
	1.5	BN 90LA 4	BE 90LA 4	BX 90LA 4		M 3SA 4	ME 3SB 4	MX 3SB 4
	1.85	BN 90LB 4						
	2.2	BN 100LA 4	BE 100LA 4	BX 100LA 4		M 3LA 4	ME 3LA 4	MX 3LA 4
	3	BN 100LB 4	BE 100LB 4	BX 100LB 4		M 3LB 4	ME 3LB 4	MX 3LB 4
	4	BN 112M 4	BE 112M 4	BX 112M 4		M 3LC 4	ME 4SA 4	MX 4SA 4
	5.5	BN 132S 4	BE 132S 4	BX 132SB 4		M 4SA 4	ME 4SB 4	MX 4SB 4
	7.5	BN 132MA 4	BE 132MA 4	BX 132MA 4		M 4LA 4	ME 4LA 4	MX 4LA 4
	9.2	BN 132MB 4	BE 132MB 4	BX 160MA 4		M 4LB 4	ME 4LB 4	MX 5SA 4
	11	BN 160MR 4	BE 160M 4	BX 160MB 4		M 4LC 4	ME 5SA 4	MX 5SB 4
		BN 160M 4						
	15	BN 160L 4	BE 160L 4	BX 160L 4		M 5SB 4	ME 5LA 4	MX 5LA 4
	18.5	BN 180M 4	BE 180M 4	BX 180M 4		M 5LA 4		
	22	BN 180L 4	BE 180L 4	BX 180L 4				
	30	BN 200L 4		BX 200LAK 4				
	37			BX 225SAK 4				
	45			BX 225SBK 4				
	55			BX 250MAK 4				
	75			BX 280SAK 4	BY 280SCK 4			
	90			BX 280SBK 4	BY 280MAK 4			
	110			BX 315SAK 4	BY 315SCK 4			
	132			BX 315SBK 4	BY 315SDK 4			
	160			BX 315SCK 4	BY 315MBK 4			
	200			BX 355SAK 4	BY 355SAK 4			
	250			BX 355MAK 4				
	315			BX 355MBK 4				
	355			BX 355MCK 4				

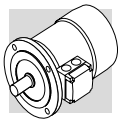

(F72)

6 pole							
Efficiency class		IE1	IE2	IE3	IE1	IE2	IE3
Pn [kW]	0.06						
	0.09	BN 63A 6			M 05A 6		
	0.12	BN 63B 6			M 05B 6		
	0.18	BN 71A 6			M 1SC 6		
	0.25	BN 71B 6			M 1SD 6		
		BN 71C 6					
	0.37	BN 80A 6			M 1LA 6		
	0.55	BN 80B 6			M 2SA 6		
	0.75	BN 80C 6	BE 90S 6		M 2SB 6		
		BN 90S 6					
	1.1	BN 90L 6	BE 100M 6		M 3SA 6	ME 3LA 6	
	1.5	BN 100LA 6	BE 100LA 6		M 3LA 6	ME 3LB 6	
	1.85	BN 100LB 6			M 3LB 6		
	2.2	BN 112M 6	BE 112M 6		M 3LC 6		
	3	BN 132S 6	BE 132S 6		M 4SA 6	ME 4SB 6	
	4	BN 132MA 6	BE 132MA 6		M 4LA 6	ME 4LA 6	
	5.5	BN 132MB 6	BE 160MA 6		M 4LB 6	ME 5SA 6	
	7.5	BN 160M 6	BE 160MB 6		M 5SA 6	ME 5SB 6	
	9.2						
	11	BN 160L 6			M 5SB 6		
	15	BN 180L 6					
	18.5	BN 200LA 6					
	22						
	30						

M12.2 60 Hz Motors

(F73)

2 pole							
Efficiency class		IE1	IE2	IE3	IE1	IE2	IE3
Pn [kW]	0.06						
	0.09						
	0.12						
	0.18	BN 63A 2			M 05A 2		
	0.25	BN 63B 2			M 05B 2		
	0.37	BN 71A 2			M 05C 2		
	0.55	BN 71B 2			M 1SD 2		
	0.75	BN 71C 2			M 1LA 2		
		BN 80A 2					
	1.1	BN 80B 2			M 2SA 2		
	1.5	BN 90SA 2			M 2SB 2		
	1.85	BN 90SB 2					
	2.2	BN 90L 2			M 3SA 2		
	3	BN 100L 2			M 3LA 2		
	3.7	BN 112M 2			M 3LB 2		
	5.5	BN 132SA 2			M 4SA 2		
	7.5	BN 132SB 2			M 4SB 2		
	9.2	BN 132M 2			M 4LA 2		
	11	BN 160MR 2			M 4LC 2		
		BN 160M 2					
	15	BN 160MB 2			M 5SB 2		
	18.5	BN 160L 2			M 5SC 2		
	22	BN 180M 2			M 5LA 2		
	30	BN 200LA 2					

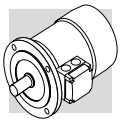

(F74)

4 pole								
								
Efficiency class		IE1	IE2	IE3	IE4	IE1	IE2	IE3
Pn [kW]	0.06	BN 56A 4						
	0.09	BN 56B 4				M 0B 4		
	0.12	BN 63A 4	BE 63A 4			M 05A 4		
	0.18	BN 63B 4	BE 63B 4			M 05B 4		
	0.25	BN 63C 4				M 05C 4		
		BN 71A 4	BE 71A 4					
	0.37	BN 71B 4	BE 71B 4			M 1SD 4		
	0.55	BN 71C 4				M 1LA 4		
		BN 80A 4	BE 80A 4					
	0.75	BN 80B 4	BE 80B 4	BX 90SR 4		M 2SA 4	ME 2SB 4	MX 2SB 4
	1.1	BN 80C 4	BE 90S 4	BX 90S 4		M 2SB 4	ME 3SA 4	MX 3SA 4
		BN 90S 4						
	1.5	BN 90LA 4	BE 90LA 4	BX 90LA 4		M 3SA 4	ME 3SB 4	MX 3SB 4
	1.85	BN 90LB 4						
	2.2	BN 100LA 4	BE 100LA 4	BX 100LA 4		M 3LA 4	ME 3LA 4	MX 3LA 4
	3	BN 100LB 4	BE 100LB 4	BX 100LB 4		M 3LB 4	ME 3LB 4	MX 3LB 4
	3.7	BN 112M 4	BE 112M 4	BX 112M 4		M 3LC 4	ME 4SA 4	MX 4SA 4
	5.5	BN 132S 4	BE 132S 4	BX 132SB 4		M 4SA 4	ME 4SB 4	MX 4SB 4
	7.5	BN 132MA 4	BE 132MA 4	BX 132MA 4		M 4LA 4	ME 4LA 4	MX 4LA 4
	9.2	BN 132MB 4	BE 132MB 4	BX 160MA 4		M 4LB 4	ME 4LB 4	MX 5SA 4
	11	BN 160MR 4	BE 160M 4	BX 160MB 4		M 4LC 4	ME 5SA 4	MX 5SB 4
		BN 160M 4						
	15	BN 160L 4	BE 160L 4	BX 160L 4		M 5SB 4	ME 5LA 4	MX 5LA 4
	18.5	BN 180M 4	BE 180M 4	BX 180M 4		M 5LA 4		
	22	BN 180L 4	BE 180L 4	BX 180L 4				
	30	BN 200L 4		BX 200LAK 4				
	37			BX 225SAK 4				
	45			BX 225SBK 4				
	55			BX 280SAK 4				
	75			BX 280SBK 4	BY 280SCK 4			
	90			BX 315SAK 4	BY 280MAK 4			
	110			BX 315SBK 4	BY 315SCK 4			
	132			BX 315SCK 4	BY 315SDK 4			
	160			BX 355SAK 4	BY 315MBK 4			
	200			BX 355SBK 4	BY 355SAK 4			
	250			BX 355SCK 4				
	315			BX 355MBK 4				
	355			BX 355MCK 4				

(F75)

6 pole							
							
Efficiency class		IE1	IE2	IE3	IE1	IE2	IE3
Pn [kW]	0.06						
	0.09	BN 63A 6			M 05A 6		
	0.12	BN 63B 6			M 05B 6		
	0.18	BN 71A 6			M 1SC 6		
	0.25	BN 71B 6			M 1SD 6		
		BN 71C 6					
	0.37	BN 80A 6			M 1LA 6		
	0.55	BN 80B 6			M 2SA 6		
	0.75	BN 80C 6			M 2SB 6		
		BN 90S 6					
	1.1	BN 90L 6			M 3SA 6		
	1.5	BN 100LA 6			M 3LA 6		
	1.85	BN 100LB 6			M 3LB 6		
	2.2	BN 112M 6			M 3LC 6		
	3	BN 132S 6			M 4SA 6		
	3.7	BN 132MA 6			M 4LA 6		
	5.5	BN 132MB 6			M 4LB 6		
	7.5	BN 160M 6			M 5SA 6		
	9.2						
	11	BN 160L 6			M 5SB 6		
	15	BN 180L 6					
	18.5	BN 200LA 6					
	22						
	30						

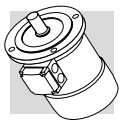

4 P	1500 min^{-1} - S1	50 Hz

P_n kW	P_n hp		n min^{-1}	M_n Nm	M_n lb·in	In 400V A	η% 100%	η% 75%	η% 50%	cos φ	I_s/I_n	M_s/M_n	M_a/M_n	KVA code	J_m x 10^{-4} kgm^2	J_m x 10^{-4} lb·ft^2	IM B5 Kg	IM B5 lbs	d.c. brake FDD Mod	M_b Nm	M_b lb·in	Z_o 1/h NB	Z_o 1/h SB	J_m x 10^{-4} kgm^2	J_m x 10^{-4} lb·ft^2	IM B5 Kg	IM B5 lbs	Standard CE+UL	BIS variant CE+UL+BIS	CN variant CE+UL+CEL	CN variant CE+UL+CCC
0.12	0.16	**BXN 63MA 4**	1407	0.8	7	0.47	64.8	60.3	52.5	0.58	3.4	2.9	1.7	H	2	0.0043	5	10	**FD 02**	1.75	15	8900	11000	2	0.0057	6	14	•	•		•
0.18	0.25	**BXN 63MB 4**	1373	1.3	12	0.61	69.9	68.8	63.3	0.61	3.5	3.1	1.8	G	3	0.0069	6	13	**FD 02**	3.5	31	7000	9000	4	0.0083	7	16	•	•		•
0.25	0.33	**BXN 71MA 4**	1388	1.7	15	0.67	73.5	72.8	67.9	0.74	4.8	1.6	2.4	H	6	0.0149	7	14	**FD 53**	5	44	5700	8100	7	0.0176	9	20	•	•		•
0.37	0.5	**BXN 71MB 4**	1419	2.5	22	1.05	77.3	76.0	70.8	0.66	6.3	2.6	2.5	L	10	0.0230	8	18	**FD 53**	5	44	6400	9900	11	0.0256	11	24	•	•		•
0.55	0.75	**BXN 80MA 4**	1447	3.6	32	1.31	80.8	80.9	77.4	0.75	6.1	1.9	1.6	J	18	0.0422	11	24	**FD 04**	10	89	2500	5200	20	0.0470	15	32	•	•		•
0.75	1	**BXN 80MB 4**	1451	4.9	43	1.63	82.5	85.1	82.5	0.78	7.4	2.4	2.0	K	29	0.0686	14	32	**FD 04**	15	133	2000	4100	31	0.0731	18	40	•	•	•	•
1.1	1.5	**BXN 90S 4**	1448	7.3	65	2.38	84.1	85.9	83.5	0.78	7.3	2.4	3.4	J	32	0.0754	16	34	**FD 05**	26	230	2800	6600	36	0.0850	22	48	•	•	•	•
1.5	2	**BXN 90L 4**	1441	9.9	88	3.44	85.3	84.3	81.7	0.75	6.7	2.6	2.4	J	35	0.0830	17	37	**FD 05**	26	230	1400	3100	39	0.0928	23	50	•	•	•	
2.2	3	**BXN 100LA 4**	1458	14.4	127	4.42	86.7	88.4	86.3	0.81	8.8	3.4	2.3	L	90	0.2136	30	65	**FD 15**	40	354	1400	2400	94	0.2231	37	80	•	•	•	
3	4	**BXN 100LB 4**	1452	19.7	174	6.14	87.7	88.0	86.2	0.80	8.1	3.2	3.0	K	90	0.2136	30	65	**FD 15**	40	354	2000	3700	94	0.2231	37	80	•	•	•	
4	5.4	**BXN 112M 4**	1453	26.3	233	7.97	88.6	88.8	87.1	0.82	7.6	2.7	2.8	J	105	0.2502	35	77	**FD 06S**	60	531	—	1400	114	0.2715	45	99	•	•	•	
5.5	7.5	**BXN 132S 4**	1476	35.6	315	11.00	89.6	91.4	90.0	0.79	9.8	4.0	3.4	L	497	1.1804	68	150	**FD 06**	100	885	—	750	520	1.2350	81	178	•	•	•	
7.5	10	**BXN 132M 4**	1473	48.6	430	15.10	90.4	91.0	89.5	0.79	9.2	3.7	3.2	L	497	1.1804	68	150	**FD 06**	100	885	—	570	520	1.2350	81	178	•	•	•	

Note: for more details on the available energy certifications look at the catalog's dedicated section.

4 P	1800 min^{-1} - S1	60 Hz

																			d.c. brake FDD								Standard	Standard*	CN variant
P_n			n	M_n		In 460V	η%			cos φ	I_s/I_n	M_s/M_n	M_a/M_n	KVA code	J_m x 10^{-4}		IM B5		Mod	M_b		Z_o 1/h		J_m x 10^{-4}		IM B5				
kW	hp		min^{-1}	Nm	lb·in	A	100%	75%	50%						kgm^2	lb·ft^2	Kg	lbs		Nm	lb·in	NB	SB	kgm^2	lb·ft^2	Kg	lbs	CE + UL	CE + UL + INMETRO	CE + UL + CCC
0.12	0.16	**BXN 63MA 4**	1724	0.7	6	0.44	66	62.2	54.2	0.52	4.1	3.8	2.7	L	2	0.0043	5	10	**FD 02**	1.75	15	8900	11000	2	0.0057	6	14	•	•	•
0.18	0.25	**BXN 63MB 4**	1719	1.0	9	0.56	69.5	71.1	65.0	0.55	4.7	3.9	3.0	K	3	0.0069	6	13	**FD 02**	3.5	31	7000	9000	4	0.0083	7	16	•	•	•
0.25	0.33	**BXN 71MA 4**	1706	1.4	12	0.59	73.4	74.1	68.5	0.70	6.0	1.8	2.1	K	6	0.0149	7	14	**FD 53**	5	44	5700	8100	7	0.0176	9	20	•	•	•
0.37	0.5	**BXN 71MB 4**	1731	2.0	18	0.96	78.2	76.6	70.7	0.61	7.7	3.1	4.4	N	10	0.0230	8	18	**FD 53**	5	44	6400	9900	11	0.0256	11	24	•	•	•
0.55	0.75	**BXN 80MA 4**	1755	3.0	27	1.15	81.1	82.1	77.7	0.72	7.3	2.2	2.2	K	18	0.0422	11	24	**FD 04**	10	89	2500	5200	20	0.0470	15	32	•	•	•
0.75	1	**BXN 80MB 4**	1757	4.1	36	1.43	85.5	85.8	82.3	0.76	8.8	2.7	3.0	L	29	0.0686	14	32	**FD 04**	15	133	2000	4100	31	0.0731	18	40	•	•	•
1.1	1.5	**BXN 90S 4**	1754	6.0	53	2.10	86.5	86.6	83.5	0.75	8.5	2.7	2.9	L	32	0.0754	16	34	**FD 05**	26	230	2800	6600	36	0.0850	22	48	•	•	•
1.5	2	**BXN 90L 4**	1750	8.2	73	2.92	86.5	86.5	83.4	0.74	8.3	2.8	2.4	L	35	0.0830	17	37	**FD 05**	26	230	1400	3100	39	0.0928	23	50	•	•	
2.2	3	**BXN 100LA 4**	1765	11.9	105	3.89	89.5	89.6	87.1	0.79	10.5	3.8	2.8	M	90	0.2136	30	65	**FD 15**	40	354	520	1400	94	0.2231	37	80	•	•	
3	4	**BXN 100LB 4**	1761	16.3	144	5.37	89.5	89.5	87.1	0.78	9.8	3.6	4.4	M	90	0.2136	30	65	**FD 15**	40	354	—	890	94	0.2231	37	80	•	•	
4	5.4	**BXN 112M 4**	1762	20.1	178	6.59	89.5	89.2	86.6	0.78	9.3	3.1	3.3	L	105	0.2502	35	77	**FD 06S**	60	531	—	780	114	0.2715	45	99	•	•	
5.5	7.5	**BXN 132S 4**	1779	29.5	261	9.72	91.7	91.1	89.0	0.77	11.4	5.0	4.0	N	497	1.1804	68	150	**FD 06**	100	885	—	600	520	1.2350	81	178	•	•	
7.5	10	**BXN 132M 4**	1777	40.3	357	13.20	91.7	91.1	89.1	0.78	10.9	4.5	3.8	N	497	1.1804	68	150	**FD 06**	100	885	—	420	520	1.2350	81	178	•	•	

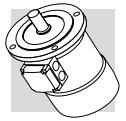

* on WD3 or WD4/WD10

4 P	1500 min^{-1} - S1	50 Hz

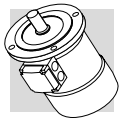

																			d.c. brake FDD								Standard	BIS variant	CN variant	
P_n			n	M_n		In 400V	η%			cos φ	$\frac{I_s}{I_n}$	$\frac{M_s}{M_n}$	$\frac{M_a}{M_n}$	KVA code	J_m x 10^{-4}		IM B5		Mod	M_b		Z_o 1/h		J_m x 10^{-4}		IM B5					
kW	hp		min^{-1}	Nm	lb·in	A	100%	75%	50%						kgm^2	lb·ft^2	Kg	lbs		Nm	lb·in	NB	SB	kgm^2	lb·ft^2	Kg	lbs	CE + UL	CE + UL + BIS	CE + UL + CEL	CE + UL + CCC
0.12	0.16	**MXN 05MA 4**	1407	0.8	7	0.47	64.8	60.3	52.5	0.58	3.4	2.9	1.7	H	2	0.0043	5	10	**FD 02**	1.75	15	8900	11000	2	0.0057	6	14	•	•		•
0.18	0.25	**MXN 05MB 4**	1373	1.3	12	0.61	69.9	68.8	63.3	0.61	3.5	3.1	1.8	G	3	0.0069	6	13	**FD 02**	3.5	31	7000	9000	4	0.0083	7	16	•	•		•
0.25	0.33	**MXN 10MA 4**	1388	1.7	15	0.67	73.5	72.8	67.9	0.74	4.8	1.6	2.4	H	6	0.0149	7	14	**FD 53**	5	44	5700	8100	7	0.0176	9	20	•	•		•
0.37	0.5	**MXN 10MB 4**	1419	2.5	22	1.05	77.3	76.0	70.8	0.66	6.3	2.6	2.5	L	10	0.0230	8	18	**FD 53**	5	44	6400	9900	11	0.0256	11	24	•	•		•
0.55	0.75	**MXN 20MA 4**	1447	3.6	32	1.31	80.8	80.9	77.4	0.75	6.1	1.9	1.6	J	18	0.0422	11	24	**FD 04**	10	89	2500	5200	20	0.0470	15	32	•	•		•
0.75	1	**MXN 20MB 4**	1451	4.9	43	1.63	82.5	85.1	82.5	0.78	7.4	2.4	2.0	K	29	0.0686	14	32	**FD 04**	15	133	2000	4100	31	0.0731	18	40	•	•	•	•
1.1	1.5	**MXN 25S 4**	1448	7.3	65	2.38	84.1	85.9	83.5	0.78	7.3	2.4	3.4	J	32	0.0754	16	34	**FD 05**	26	230	2800	6600	36	0.0850	22	48	•	•	•	•
1.5	2	**MXN 25L 4**	1441	9.9	88	3.44	85.3	84.3	81.7	0.75	6.7	2.6	2.4	J	35	0.0830	17	37	**FD 05**	26	230	1400	3100	39	0.0928	23	50	•	•	•	
2.2	3	**MXN 30LA 4**	1458	14.4	127	4.42	86.7	88.4	86.3	0.81	8.8	3.4	2.3	L	90	0.2136	30	65	**FD 15**	40	354	1400	2400	94	0.2231	37	80	•	•	•	
3	4	**MXN 30LB 4**	1452	19.7	174	6.14	87.7	88.0	86.2	0.80	8.1	3.2	3.0	K	90	0.2136	30	65	**FD 15**	40	354	2000	3700	94	0.2231	37	80	•	•	•	
4	5.4	**MXN 35M 4**	1453	26.3	233	7.97	88.6	88.8	87.1	0.82	7.6	2.7	2.8	J	105	0.2502	35	77	**FD 06S**	60	531	—	1400	114	0.2715	45	99	•	•	•	
5.5	7.5	**MXN 40S 4**	1476	35.6	315	11.00	89.6	91.4	90.0	0.79	9.8	4.0	3.4	L	497	1.1804	68	150	**FD 06**	100	885	—	750	520	1.2350	81	178	•	•	•	
7.5	10	**MXN 40M 4**	1473	48.6	430	15.10	90.4	91.0	89.5	0.79	9.2	3.7	3.2	L	497	1.1804	68	150	**FD 06**	100	885	—	570	520	1.2350	81	178	•	•	•	

Note: for more details on the available energy certifications look at the catalog's dedicated section.

4 P	1800 min^{-1} - S1	60 Hz

																			d.c. brake FDD									Standard	Standard*	CN variant
P_n			n	M_n		In 460V	η%			cos φ	I_s/I_n	M_s/M_n	M_a/M_n	KVA code	J_m x 10^{-4}		IM B5		Mod	M_b		Z_o 1/h		J_m x 10^{-4}		IM B5				
kW	hp		min^{-1}	Nm	lb·in	A	100%	75%	50%						kgm^2	lb·ft^2	Kg	lbs		Nm	lb·in	NB	SB	kgm^2	lb·ft^2	Kg	lbs	CE + UL	CE + UL + INMETRO	CE + UL + CCC
0.12	0.16	**MXN 05MA 4**	1724	0.7	6	0.44	66	62.2	54.2	0.52	4.1	3.8	2.7	L	2	0.0043	5	10	**FD 02**	1.75	15	8900	11000	2	0.0057	6	14	•	•	•
0.18	0.25	**MXN 05MB 4**	1719	1.0	9	0.56	69.5	71.1	65.0	0.55	4.7	3.9	3.0	K	3	0.0069	6	13	**FD 02**	3.5	31	7000	9000	4	0.0083	7	16	•	•	•
0.25	0.33	**MXN 10MA 4**	1706	1.4	12	0.59	73.4	74.1	68.5	0.70	6.0	1.8	2.1	K	6	0.0149	7	14	**FD 53**	5	44	5700	8100	7	0.0176	9	20	•	•	•
0.37	0.5	**MXN 10MB 4**	1731	2.0	18	0.96	78.2	76.6	70.7	0.61	7.7	3.1	4.4	N	10	0.0230	8	18	**FD 53**	5	44	6400	9900	11	0.0256	11	24	•	•	•
0.55	0.75	**MXN 20MA 4**	1755	3.0	27	1.15	81.1	82.1	77.7	0.72	7.3	2.2	2.2	K	18	0.0422	11	24	**FD 04**	10	89	2500	5200	20	0.0470	15	32	•	•	•
0.75	1	**MXN 20MB 4**	1757	4.1	36	1.43	85.5	85.8	82.3	0.76	8.8	2.7	3.0	L	29	0.0686	14	32	**FD 04**	15	133	2000	4100	31	0.0731	18	40	•	•	•
1.1	1.5	**MXN 25S 4**	1754	6.0	53	2.10	86.5	86.6	83.5	0.75	8.5	2.7	2.9	L	32	0.0754	16	34	**FD 05**	26	230	2800	6600	36	0.0850	22	48	•	•	•
1.5	2	**MXN 25L 4**	1750	8.2	73	2.92	86.5	86.5	83.4	0.74	8.3	2.8	2.4	L	35	0.0830	17	37	**FD 05**	26	230	1400	3100	39	0.0928	23	50	•	•	
2.2	3	**MXN 30LA 4**	1765	11.9	105	3.89	89.5	89.6	87.1	0.79	10.5	3.8	2.8	M	90	0.2136	30	65	**FD 15**	40	354	520	1400	94	0.2231	37	80	•	•	
3	4	**MXN 30LB 4**	1761	16.3	144	5.37	89.5	89.5	87.1	0.78	9.8	3.6	4.4	M	90	0.2136	30	65	**FD 15**	40	354	—	890	94	0.2231	37	80	•	•	
4	5.4	**MXN 35M 4**	1762	20.1	178	6.59	89.5	89.2	86.6	0.78	9.3	3.1	3.3	L	105	0.2502	35	77	**FD 06S**	60	531	—	780	114	0.2715	45	99	•	•	
5.5	7.5	**MXN 40S 4**	1779	29.5	261	9.72	91.7	91.1	89.0	0.77	11.4	5.0	4.0	N	497	1.1804	68	150	**FD 06**	100	885	—	600	520	1.2350	81	178	•	•	
7.5	10	**MXN 40M 4**	1777	40.3	357	13.20	91.7	91.1	89.1	0.78	10.9	4.5	3.8	N	497	1.1804	68	150	**FD 06**	100	885	—	420	520	1.2350	81	178	•	•	

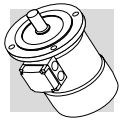

* on WD3 or WD4/WD10

[mm]

M14 MOTORS DIMENSIONS BXN-MXN

BXN - IM B5

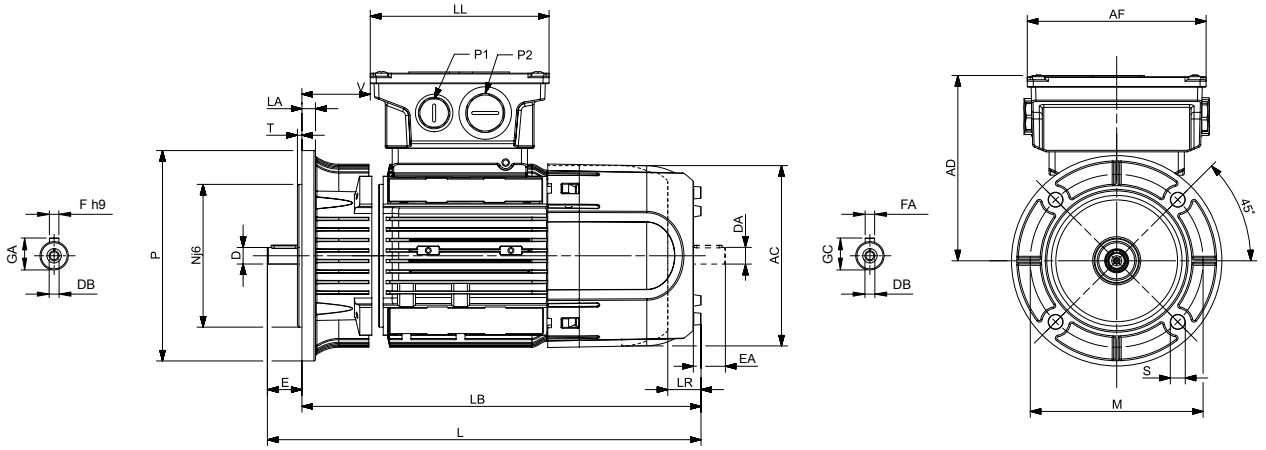

	Shaft					Housing					
	D DA	**E EA**	**DB**	**GA GC**	**F FA**	**M**	**N**	**P**	**S**	**T**	**LA**
BXN 63	11 9(1)	23 20(1)	M4 M3(1)	12.5 10.2(1)	4 3(1)	115	95	140	9.5	3	9
BXN 71	14 11(1)	30 23(1)	M5 M4(1)	16 12.5(1)	5 4(1)	130	110	160		3.5	
BXN 80	19 14(1)	40 30(1)	M6 M5(1)	21.5 16(1)	6 5(1)	165	130	200	11.5		10
BXN 90	24 19(1)	50 40(1)	M8 M6(1)	27 21.5(1)	8 6(1)						
BXN 100	28 24(1)	60 50(1)	M10 M8(1)	31 27(1)	8 8(1)	215	180	250	14	4	11
BXN 112	28 24(1)	60 50(1)	M10 M8(1)	31 27(1)	8 8(1)						
BXN 132	38 28(1)	80 60(1)	M12 M10(1)	41 31(1)	10 8(1)	265	230	300			12

	Motor											
	AC	**L**		**LB**		**LC**		**LR**	**AD**	**AF**	**LL**	**V**
		(sheet metal)	**(plastic)**	**(sheet metal)**	**(plastic)**	**(sheet metal)**	**(plastic)**					
BXN 63	122	259	281	236	258	282	304,0	22	136	112	165	37
BXN 71	138	272	292	242	261.5	302	322,0	19.5	138			34
BXN 80	158	329.7	346	289.7	306	369.7	386,0	16.3	148			40
BXN 90	177	338.5	365	288.5	315	388.5	415,0	26.5	170		170	43
BXN 100	192	418	-	358	-	478	-	-	179	122	170	42
BXN 112	220	421.5	-	361.5	-	481.5	-	-	191			62
BXN 132	255	533.4	-	453.4	-	613.4	-	-	216	148	192	63

N.B.: 1) These values refer to the rear shaft end (PS).

BXN - IM B5

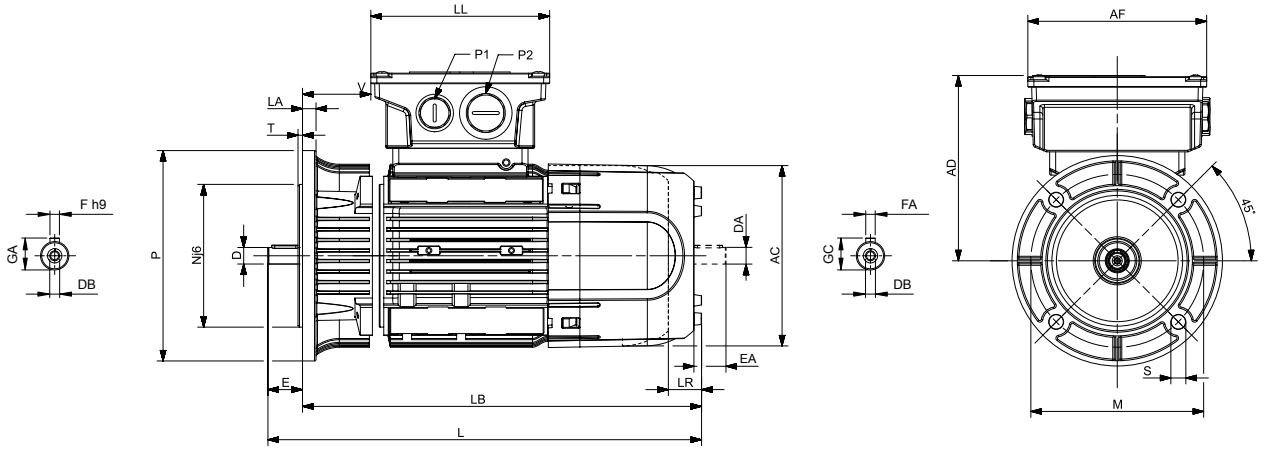

Dimensions are in Inch except when shown in *italic [mm]*

	Shaft					Housing					
	D DA	**E EA**	**DB**	**GA GC**	**F FA**	**M**	**N**	**P**	**S**	**T**	**LA**
BXN 63	0.433 0.354(1)	0.906 0.787(1)	*M4* *M3(1)*	0.492 0.402(1)	0.157 0.118(1)	4.528	3.74	5.512	0.374	0.118	0.354
BXN 71	0.551 0.433(1)	1.181 0.906(1)	*M5* *M4(1)*	0.630 0.492(1)	0.197 0.157(1)	5.118	4.331	6.299		0.138	
BXN 80	0.748 0.551(1)	1.575 1.181(1)	*M6* *M5(1)*	0.846 0.630(1)	0.236 0.197(1)	6.496	5.118	7.874	0.453		0.394
BXN 90	0.945 0.748(1)	1.969 1.575(1)	*M8* *M6(1)*	1.063 0.846(1)	0.315 0.236(1)						
BXN 100	1.102 0.945(1)	2.362 1.969(1)	*M10* *M8(1)*	1.220 1.063(1)	0.315 0.315(1)	8.465	7.087	9.843	0.551	0.157	0.433
BXN 112											
BXN 132	1.496 1.102(1)	3.150 2.362(1)	*M12* *M10(1)*	1.614 1.220(1)	0.394 0.315(1)	10.433	9.055	11.811			0.472

	Motor											
	AC	**L**		**LB**		**LC**		**LR**	**AD**	**AF**	**LL**	**V**
		(sheet metal)	**(plastic)**	**(sheet metal)**	**(plastic)**	**(sheet metal)**	**(plastic)**					
BXN 63	4.803	10.197	11.063	9.291	10.157	10.984	11.850	0.866	4.815	4.685	4.685	1.496
BXN 71	5.433	10.709	11.496	9.528	10.295	11.615	12.402	0.768	4.854	4.685	4.685	1.378
BXN 80	6.220	12.980	13.622	11.406	12.047	14.161	14.803	0.642	5.228	4.685	4.685	1.614
BXN 90	6.969	13.327	14.370	11.358	12.402	14.902	15.945	1.043	5.661	5.039	5.039	1.850
BXN 100	7.559	16.457	-	14.094	-	18.426	-	-	5.996	5.039	5.039	1.811
BXN 112	8.661	16.594	-	14.232	-	18.563	-	-	6.449	5.039	5.039	2.579
BXN 132	10.039	21.000	-	17.850	-	23.362	-	-	8.386	5.795	7.559	2.480

N.B.: 1) These values refer to the rear shaft end (PS).

[mm]

BXN - IM B5 - FDD

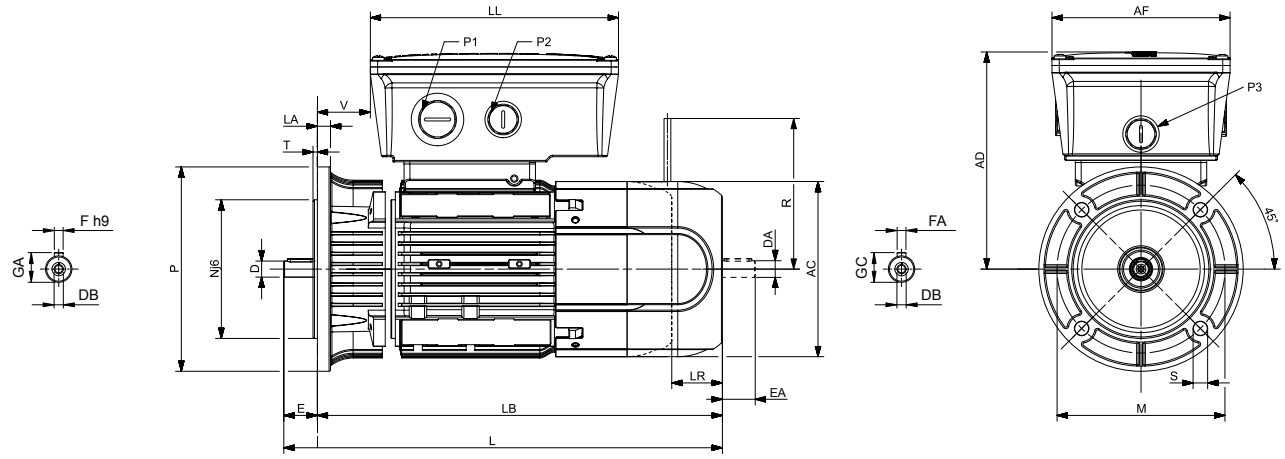

	Shaft					Housing					
	D DA	**E EA**	**DB**	**GA GC**	**F FA**	**M**	**N**	**P**	**S**	**T**	**LA**
BXN 63	11 9(1)	23 20(1)	M4 M3(1)	12.5 10.2(1)	4 3(1)	115	95	140	9.5	3	9
BXN 71	14 11(1)	30 23(1)	M5 M4(1)	16 12.5(1)	5 4(1)	130	110	160		3.5	
BXN 80	19 14(1)	40 30(1)	M6 M5 1)	21.5 16(1)	6 5(1)	165	130	200	11.5		10
BXN 90	24 19(1)	50 40(1)	M8 M6(1)	27 21.5(1)	8 6(1)						
BXN 100	28 24(1)	60 50(1)	M10 M8(1)	31 27(1)	8 8(1)	215	180	250	14	4	11
BXN 112	28 24(1)	60 50(1)	M10 M8(1)	31 27(1)	8 8(1)						
BXN 132	38 28(1)	80 60(1)	M12 M10(1)	41 31(1)	10 8(1)	265	230	300			12

	Motor												
	AC	**L**		**LB**		**LC**		**LR**	**AD**	**AF**	**LL**	**V**	**R**
		(sheet metal)	**(plastic)**	**(sheet metal)**	**(plastic)**	**(sheet metal)**	**(plastic)**						**FDD**
BXN 63	122	293.7	328	270.7	305	316.7	351	34.3	136	112	165	37	106
BXN 71	138	316.1	351	286.1	321	346.1	381	34.9	138			34	106
BXN 80	158	378.8	417	338.8	377	418.8	457	38.2	148			40	115
BXN 90	177	388.5	-	338.5	-	438.5	-	-	170		170	43	131
BXN 100	192	475	-	415	-	535	-	-	179	122	170	42	161
BXN 112	220	489.5	-	429.5	-	549.5	-	-	191			62	193
BXN 132	255	606.9	-	527.4	-	686.9	-	-	216	148	192	63	239

N.B.: 1) These values refer to the rear shaft end (PS).

BXN - IM B5 - FDD

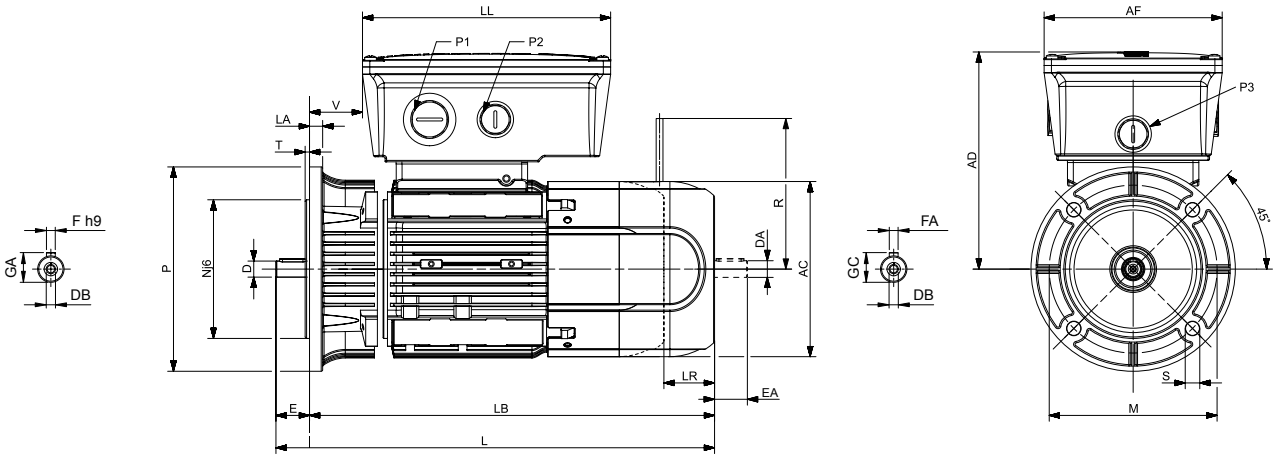

Dimensions are in Inch except when shown in *italic [mm]*

	Shaft					Housing					
	D DA	**E EA**	**DB**	**GA GC**	**F FA**	**M**	**N**	**P**	**S**	**T**	**LA**
BXN 63	0.433 0.354(1)	0.906 0.787(1)	*M4 M3(1)*	0.492 0.402(1)	0.157 0.118(1)	4.528	3.74	5.512	0.374	0.118	0.354
BXN 71	0.551 0.433(1)	1.181 0.906(1)	*M5 M4(1)*	0.630 0.492(1)	0.197 0.157(1)	5.118	4.331	6.299		0.138	
BXN 80	0.748 0.551(1)	1.575 1.181(1)	*M6 M5(1)*	0.846 0.630(1)	0.236 0.197(1)	6.496	5.118	7.874	0.453		0.394
BXN 90	0.945 0.748(1)	1.969 1.575(1)	*M8 M6(1)*	1.063 0.846(1)	0.315 0.236(1)						
BXN 100	1.102 0.945(1)	2.362 1.969(1)	*M10 M8(1)*	1.220 1.063(1)	0.315 0.315(1)	8.465	7.087	9.843	0.551	0.157	0.433
BXN 112											
BXN 132	1.496 1.102(1)	3.150 2.362(1)	*M12 M10(1)*	1.614 1.220(1)	0.394 0.315(1)	10.433	9.055	11.811			0.472

	Motor												
	AC	**L**		**LB**		**LC**		**LR**	**AD**	**AF**	**LL**	**V**	**R**
		(sheet metal)	**(plastic)**	**(sheet metal)**	**(plastic)**	**(sheet metal)**	**(plastic)**						**FDD**
BXN 63	4.803	11.563	12.913	10.657	12.008	12.35	13.700	1.350	5.354	4.409	6.496	1.457	4.173
BXN 71	5.433	12.445	13.819	11.264	12.638	13.351	14.725	1.374	5.433	4.409	6.496	1.339	4.173
BXN 80	6.220	14.913	16.417	13.339	14.843	16.094	17.598	1.504	5.827	4.409	6.496	1.575	4.528
BXN 90	6.969	15.295	-	13.327	-	16.87	-	-	6.693	4.803	6.693	1.693	5.157
BXN 100	7.559	18.701	-	16.339	-	20.67	-	-	7.047	4.803	6.693	1.654	6.339
BXN 112	8.661	19.272	-	16.909	-	21.241	-	-	7.520	4.803	6.693	2.441	7.598
BXN 132	10.039	23.894	-	20.764	-	26.256	-	-	8.504	5.795	7.559	2.480	9.409

N.B.: 1) These values refer to the rear shaft end (PS).

[mm]

MXN

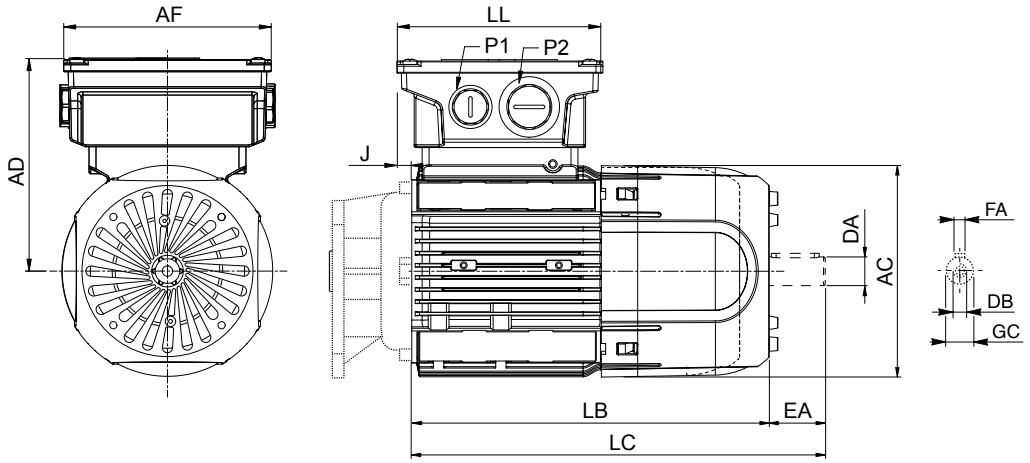

	Rear shaft end					Motor								
	DA	EA	DB	FA	GC	AC	LB (metal sheet)	LB (plastic)	LC (metal sheet)	LC (plastic)	AF	LL	J	AD
MXN 05	9	20	M3	3	10.2	122	189.5	211.5	209.5	231.5	119	119	8.5	122.3
MXN 10	11	23	M4	4	12.5	138	196.5	216	219.5	239	119	119	9.9	123.3
MXN 20	14	30	M5	5	16	158	239.2	255.5	269.2	285.5	119	119	9.5	132.8

MXN

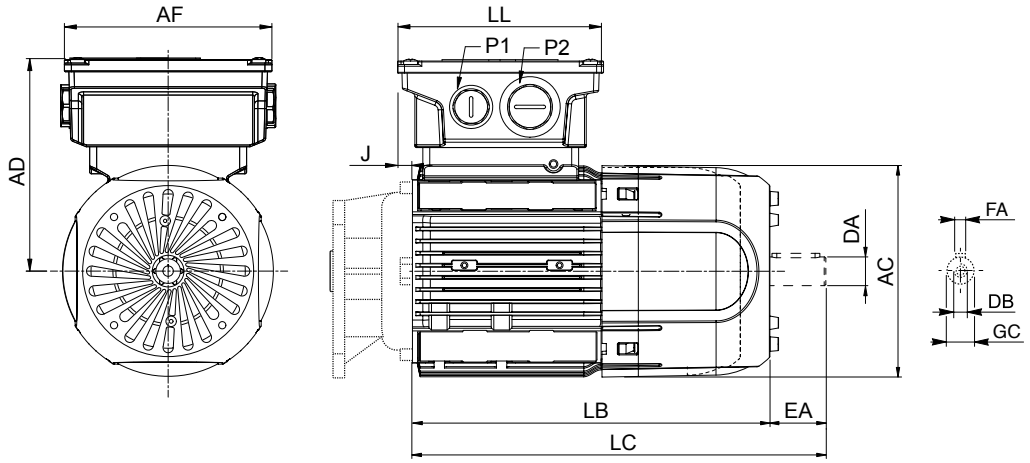

Dimensions are in Inch except when shown in *italic [mm]*

	Rear shaft end					Motor								
	DA	EA	DB	FA	GC	AC	LB		LC		AF	LL	J	AD
							(metal sheet)	(plastic)	(metal sheet)	(plastic)				
MXN 05	0.433 *0.354*[(1)]	0.906 *0.787*[(1)]	M4 M3[(1)]	0.492 *0.402*[(1)]	0.157 *0.118*[(1)]	4.803	7.461	8.327	8.248	9.114	4.685	4.685	0.335	4.815
MXN 10	0.551 *0.433*[(1)]	1.181 *0.906*[(1)]	M5 M4[(1)]	0.630 *0.492*[(1)]	0.197 *0.157*[(1)]	5.433	7.736	8.504	8.523	9.291	4.685	4.685	0.390	4.854
MXN 20	0.748 *0.551*[(1)]	1.575 *1.181*[(1)]	M6 M5[(1)]	0.846 *0.630*[(1)]	0.236 *0.197*[(1)]	6.220	9.417	10.059	10.846	11.385	4.685	4.685	0.374	5.228

[mm]

MXN - FDD

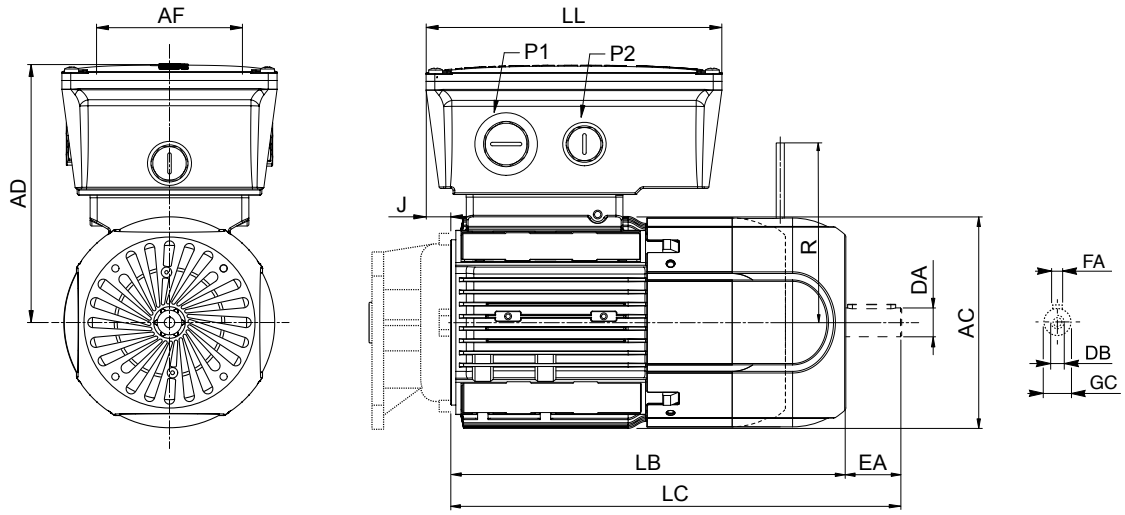

	Rear shaft end					Motor									
	DA	EA	DB	FA	GC	AC	LB (metal sheet)	LB (plastic)	LC (metal sheet)	LC (plastic)	AF	LL	J	AD	R FDD
MXN 05	9	20	M3	3	10.2	122	204.2	238.5	224.2	258.5	112	165	9.5	136	106
MXN 10	11	23	M4	4	12.5	138	217.1	252	240.1	275	112	165	11.5	138	106
MXN 20	14	30	M5	5	16	158	258.3	296.5	288.3	326.5	112	165	10.5	148	115

MXN - FDD

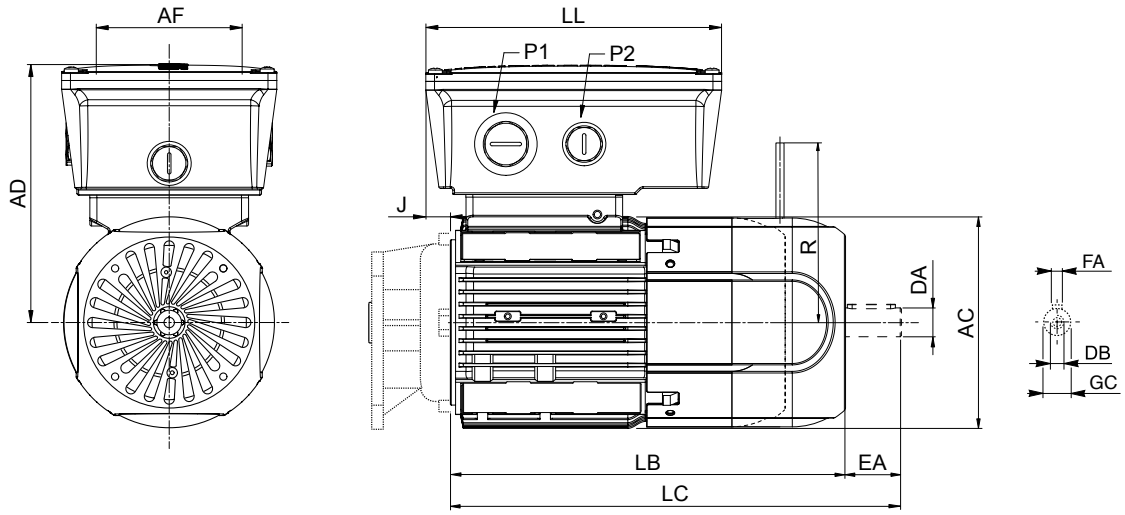

Dimensions are in Inch except when shown in *italic [mm]*

	Rear shaft end					Motor									
	DA	EA	DB	FA	GC	AC	LB		LC		AF	LL	J	AD	R
							(metal sheet)	(plastic)	(metal sheet)	(plastic)					FDD
MXN 05	0.433 0.354(1)	0.906 0.787(1)	*M4* *M3(1)*	0.492 0.402(1)	0.157 0.118(1)	4.803	8.827	10.177	9.614	10.964	4.409	6.496	0.374	5.354	4.173
MXN 10	0.551 0.433(1)	1.181 0.906(1)	*M5* *M4(1)*	0.630 0.492(1)	0.197 0.157(1)	5.433	9.453	10.827	10.24	11.614	4.409	6.496	0.453	5.433	4.173
MXN 20	0.748 0.551(1)	1.575 1.181(1)	*M6* *M5(1)*	0.846 0.630(1)	0.236 0.197(1)	6.220	11.350	12.854	12.137	13.641	4.409	6.496	0.413	5.827	4.528

4 P	1500 min^{-1} - S1	50 Hz

																		d.c. brake							Standard
																		FD							
P_n			n	M_n		In 400V	η%			cos φ	$\frac{I_s}{I_n}$	$\frac{M_s}{M_n}$	$\frac{M_a}{M_n}$	KVA code	J_m x 10^{-4}		IM B5		Mod	M_b		J_m x 10^{-4}		IM B5		CE
kW	hp		min^{-1}	Nm	lb·in	A	100%	75%	50%						kgm^2	lb·ft^2	Kg	lbs		Nm	lb·in	kgm^2	lb·ft^2	Kg	lbs	
75	101	**BY 280SCK 4**	1487	481	4257	130	96.0	96.4	96.1	0.86	7.8	2.8	2.9	N/A	1.90	0.0045	725	1598	**FD 100**	1000	8850	1.89	0.0045	831	1832	•
90	121	**BY 280MAK 4**	1489	577	5106	165	96.1	96.1	95.1	0.82	8.9	2.8	3.2	N/A	2.30	0.0055	840	1852	**FD 100**	1000	8850	2.35	0.0056	946	2086	•
110	148	**BY 315SCK 4**	1491	704	6230	194	96.3	96.5	96.1	0.85	7.8	2.4	3.1	N/A	2.90	0.0069	1000	2205	**FD 100**	1000	8850	2.94	0.0070	1106	2438	•
132	177	**BY 315SDK 4**	1490	846	7487	238	96.4	96.4	95.4	0.83	8.9	2.6	3.1	N/A	3.20	0.0076	1065	2348	**FD 160**	1600	14160	3.25	0.0077	1233	2718	•
160	215	**BY 315MBK 4**	1490	1028	9098	278	96.6	96.8	96.4	0.86	8.1	2.8	3.0	N/A	3.90	0.0093	1220	2690	**FD 160**	1600	14160	3.95	0.0094	1388	3060	•
200	268	**BY 355SAK 4**	1491	1281	11337	345	96.7	96.7	96.2	0.87	7.3	2.4	2.7	N/A	5.90	0.0140	1610	3549	**FD 250**	2500	22125	5.95	0.0141	1778	3920	•

BY - IM B5

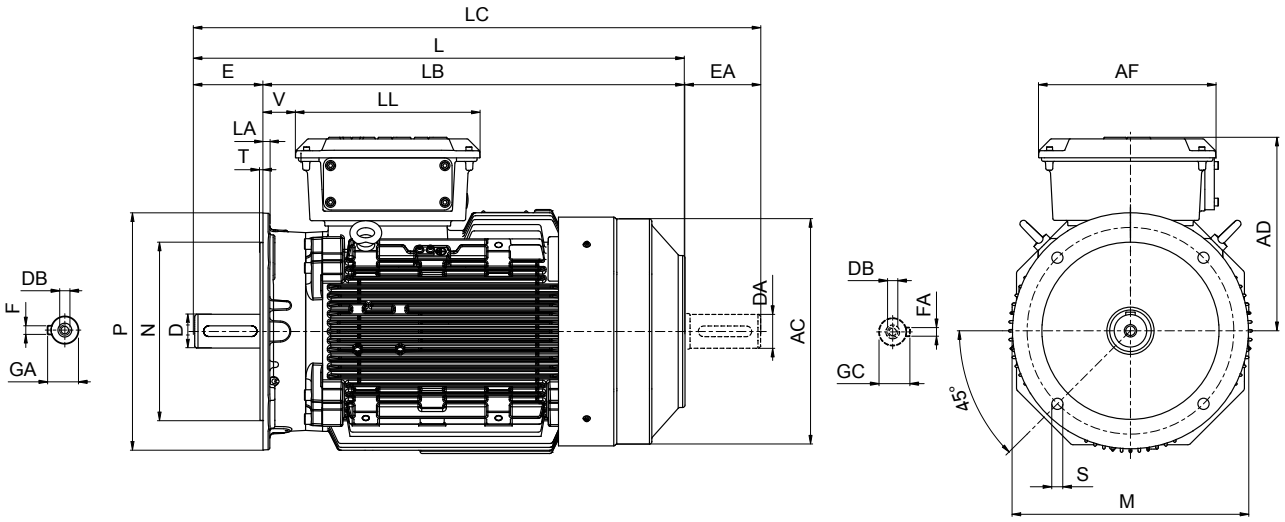

[mm]

	Shaft					Flange						Motor							
	D DA	**E EA**	**DB**	**GA GC**	**F FA**	**M**	**N**	**P**	**S**	**T**	**LA**	**AC**	**L**	**LB**	**LC**	**AD**	**AF**	**LL**	**V**
BY 280SCK	75 65(1)	140 140(1)	M20 M20(1)	79.5 69 (1)	20 18(1)	500	450	550	18	5	23	567	1086	946	1236	482	434	306	43
BY 280MAK													1190	1050	1340	505			
BY 315SCK	80 75(1)	170 140(1)	M20 M20(1)	85 79.5(1)	22 20(1)	600	550	660	23	6	25	645	1202	1032	1350	537	473	347	42
BY 315SDK																			
BY 315MBK													1313	1143	1451				
BY 355SAK	100 75(1)	210 170(1)	M24 M20(1)	106 79.5(1)	28 20(1)	740	680	800				740	1479	1269	1651	603	694	413	50

Dimensions are in Inch except when shown in *italic [mm]*

[inch]

	Shaft					Flange						Motor							
	D DA	**E EA**	**DB**	**GA GC**	**F FA**	**M**	**N**	**P**	**S**	**T**	**LA**	**AC**	**L**	**LB**	**LC**	**AD**	**AF**	**LL**	**V**
BY 280SCK	2.953 2.559(1)	5.512 5.512(1)	*M20 M20(1)*	3.130 2.717(1)	0.787 0.709(1)	19.685	17.717	21.654	0.709	0.197	0.906	22.323	42.756	37.244	48.661	18.976	17.087	12.047	1.693
BY 280MAK													46.850	41.339	52.756	19.882			
BY 315SCK	3.150 2.953(1)	6.693 5.512(1)		3.346 3.130(1)	0.866 0.787(1)	23.622	21.654	25.984	0.906	0.236	0.984	25.394	47.323	40.630	53.150	21.142	18.622	13.661	1.654
BY 315SDK																			
BY 315MBK													51.693	45.000	57.126				
BY 355SAK	3.937 2.953(1)	8.268 6.693(1)	*M24 M20(1)*	4.173 3.130(1)	1.102 0.787(1)	29.134	26.772	31.496				29.134	58.228	49.961	65.000	23.740	27.323	16.260	1.969

N.B.: 1) These values refer to the rear shaft end (PS).

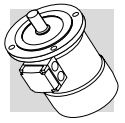

4 P	1500 min^{-1} - S1	50 Hz

																			d.c. brake FD											
P_n			n	M_n		In 400V	η%			cos φ	$\frac{I_s}{I_n}$	$\frac{M_s}{M_n}$	$\frac{M_a}{M_n}$	KVA	J_m x 10^{-4}		IM B5		Mod	M_b		Z_o 1/h		J_m x 10^{-4}		IM B5		CE	CE + BIS	CE + CEL
kW	hp		min^{-1}	Nm	lb·in	A	100%	75%	50%					code	kgm^2	lb·ft^2	Kg	lbs		Nm	lb·in	NB	SP	kgm^2	lb·ft^2	Kg	lbs			
0.12	0.16	**BX 63A 4**	1365	0.8	7.4	0.45	64.8	60	52.9	0.64	2.9	2.4	1.7	G	1.8	0.0043	3.2	7	**FD 02**	1.75	15	8900	11000	2.4	0.0057	4.9	11	•	•	
0.18	0.25	**BX 63B 4**	1370	1.3	11.1	0.57	69.9	69.5	65.9	0.63	3.6	2.6	1.8	G	2.9	0.0069	5.1	11	**FD 02**	3.5	31	7000	9000	3.5	0.0083	6.8	12	•	•	
0.25	0.33	**BX 63C 4**	1390	1.7	15.5	0.78	73.5	71.0	65.6	0.64	3.9	3.0	2.5	H	4.3	0.0102	5.4	12	**FD 02**	3.5	31	7800	10000	4.9	0.0116	7.0	16	•	•	
0.25	0.33	**BX 71A 4**	1400	1.7	15.5	0.63	73.5	76.0	72.6	0.77	4.3	2.3	2.3	G	6.3	0.0150	5.7	13	**FD 03**	3.5	31	5400	7800	8.4	0.0190	8.4	19	•	•	
0.37	0.55	**BX71B 4**	1420	2.5	22.0	1.0	77.3	78.1	73.8	0.71	5.9	3.4	3.1	J	10	0.0230	7.3	16	**FD 03**	5	44	7000	10000	11.8	0.0280	10	22	•	•	
0.55	0.75	**BX 80A 4**	1425	3.7	33	1.2	80.8	78.6	75.2	0.81	6.8	3.5	2.7	J	28	0.0664	12.2	26.9	**FD 04**	15	133	2400	4700	29.6	0.0702	16	36	•	•	
0.75	1	**BX 80B 4**	1425	5.0	44.5	1.61	82.5	83.9	83.2	0.81	6.5	2.0	1.8	J	35	0.0831	16	35	**FD 04**	15	133	1700	3300	37	0.0878	20	44	•	•	
1.1	1.5	**BX 90S 4**	1425	7.4	65.2	2.44	84.1	84.1	82.0	0.77	6.9	3.4	2.2	J	27	0.0641	16	35	**FD 14**	15	133	3700	6200	29	0.0688	20	44	•	•	
1.5	2	**BX 90LA 4**	1420	10.1	89.3	3.3	85.3	86.2	84.9	0.78	6.3	3.1	1.9	J	31	0.0736	17	37	**FD 05**	26	230	2400	4300	35	0.0831	23	51	•	•	
2.2	3	**BX 100LA 4**	1445	14.5	129	5.1	86.7	86.2	84.0	0.72	7.2	3.6	2.4	K	58	0.1376	24	53	**FD 15**	40	354	1500	2800	62	0.1471	31	68	•	•	•
3	4	**BX 100LB 4**	1445	19.8	175	6.7	87.7	87.7	86.0	0.74	7.6	3.9	2.6	K	73	0.1732	29	64	**FD 15**	40	354	1500	2700	77	0.1827	36	79	•	•	•
3.7	5	**BX 112M 4**	1450	24.4	216	7.6	88.4	89.7	87.7	0.79	8.6	4.0	2.5	L	130	0.3085	38	84	**FD 06S**	60	531	—	1100	139	0.3299	48	106		•	
4	5.4	**BX 112M 4**	1445	26.0	234	8.1	88.6	88.9	87.6	0.80	8.1	3.8	2.5	J	130	0.3085	38	84	**FD 06S**	60	531	—	1100	139	0.3299	48	106	•		•
5.5	7.5	**BX 132SB 4**	1460	36.0	318	10.6	89.6	89.2	88.8	0.83	8.2	3.6	2.3	J	310	0.7356	57	126	**FD 56**	75	664	—	700	320	0.7594	70	154	•	•	•
7.5	10	**BX 132MA 4**	1460	49.0	434	15.0	90.4	90.9	90.2	0.80	8.4	3.8	2.5	K	360	0.8543	67	148	**FD 06**	100	885	—	700	370	0.8780	80	176	•	•	•
9.2	12.5	**BX 160MA 4**	1465	60.0	531	17.8	91.0	92.1	91.7	0.82	7.9	3.6	2.1	J	650	1.5425	95	209	**FD 08**	170	1505	—	620	725	1.7205	125	276	•		•
11	15	**BX 160MB 4**	1465	71.7	635	20.5	91.4	92.9	92.5	0.84	7.8	3.4	1.9	J	780	1.8509	110	243	**FD 08**	170	1505	—	470	855	2.0289	140	309	•		•
15	20	**BX 160L 4**	1465	98.0	865	28.1	92.1	93.2	92.6	0.82	9.0	4.1	2.3	K	890	2.1120	121	267	**FD 08**	200	1770	—	510	965	2.2900	151	333	•		•
18.5	25	**BX 180M 4**	1480	119	1056	32.9	92.6	94.1	93.1	0.85	11.3	2.6	2.3	M	1560	3.7019	155	342	**FD 09**	300	2655	—	440	1760	4.1765	195	430	•		•
22	30	**BX 180L 4**	1475	142	1261	38.2	93.0	93.6	92.8	0.88	10.2	2.5	2.0	L	1660	3.9392	163	359	**FD 09**	300	2655	—	250	1860	4.4138	203	448	•		•

Note: for more details on the available energy certifications look at the catalog's dedicated section.

4 P	1500 min^{-1} - S1	50 Hz

																			d.c. brake FD						Standard	BIS variant	CEL variant
P_n			n	M_n		In 400V	η%			cos φ	I_s/I_n	M_s/M_n	M_a/M_n	KVA code	J_m x 10^{-4}		IM B5		Mod	M_b		J_m x 10^{-4}		IM B5		CE	CE + BIS	CE + CEL
kW	hp		min^{-1}	Nm	lb·in	A	100%	75%	50%						kgm^2	lb·ft^2	Kg	lbs		Nm	lb·in	kgm^2	lb·ft^2	Kg	lbs			
30	40	**BX 200LAK 4**	1483	193	1708	55.7	94.7	95.1	95.0	0.82	8.3	3.0	3.3	N/A	0.37	0.0009	319	703	**FD 8**	400	3540	0.39	0.0009	337	743	•	•	•
37	50	**BX 225SAK 4**	1482	238	2106	65.9	95.1	95.5	95.4	0.85	7.7	2.8	3.1	N/A	0.54	0.0013	398	877	**FD 9**	600	5310	0.57	0.0014	426	939	•	•	•
45	60	**BX 225SBK 4**	1481	290	2567	80.4	95.2	95.6	95.6	0.85	7.9	2.8	3.2	N/A	0.54	0.0013	398	877	**FD 9**	600	5310	0.57	0.0014	426	939	•	•	•
55	74	**BX 250MAK 4**	1485	354	3133	98.9	95.6	95.8	95.5	0.84	7.9	3.0	3.3	N/A	0.93	0.0022	476	1049	**FD10**	800	7080	1.01	0.0024	521	1149	•	•	•
75	101	**BX 280SAK 4**	1487	482	4266	134.0	95.9	96.2	96.1	0.84	7.3	2.5	2.8	N/A	1.50	0.0036	665	1466	**FD 100**	1000	8850	1.54	0.0036	771	1700	•	•	•
90	121	**BX 280SBK 4**	1487	578	5115	161.0	96.2	96.4	96.1	0.84	7.9	2.9	3.0	N/A	1.85	0.0044	725	1598	**FD 100**	1000	8850	1.89	0.0045	831	1832	•	•	•
110	148	**BX 315SAK 4**	1491	704	6230	194.0	96.8	97.0	96.7	0.84	8.3	2.4	3.1	N/A	2.90	0.0069	1000	2205	**FD 100**	1000	8850	2.94	0.0070	1106	2438	•	•	•
132	177	**BX 315SBK 4**	1490	846	7487	234.0	96.9	97.1	96.8	0.84	8.1	2.6	3.2	N/A	3.20	0.0076	1065	2348	**FD 160**	1600	14160	3.25	0.0077	1233	2718	•	•	•
160	215	**BX 315SCK 4**	1490	1025	9071	279.0	96.7	96.9	96.6	0.86	8.2	2.7	3.0	N/A	3.90	0.0093	1220	2690	**FD 160**	1600	14160	3.95	0.0094	1388	3060	•	•	•
200	268	**BX 355SAK 4**	1491	1281	11337	345.0	96.6	96.7	96.4	0.87	7.3	2.1	2.7	N/A	5.90	0.0140	1610	3549	**FD 250**	2500	22125	5.95	0.0141	1778	3920	•	•	•
250	335	**BX 355MAK 4**	1491	1601	14169	435.0	96.0	96.0	95.6	0.86	6.4	2.1	2.9	N/A	6.90	0.0164	1780	3924	**FD 250**	2500	22125	6.95	0.0165	1948	4295	•	•	•
315	422	**BX 355MBK 4**	1491	2017	17850	550.0	96.0	96.1	95.7	0.85	7.3	2.4	3.3	N/A	7.20	0.0171	1820	4012	**FD 250**	2500	22125	7.25	0.0172	1988	4383	•	•	•
355	476	**BX 355MCK 4**	1490	2275	20134	616.0	96.0	96.2	95.8	0.86	6.3	2.3	2.8	N/A	8.40	0.0199	2140	4718	**FD 250**	2500	22125	8.45	0.0201	2308	5088	•	•	•

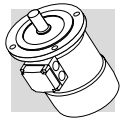

Note: for more details on the available energy certifications look at the catalog's dedicated section.

4 P	1800 min^{-1} - S1	60 Hz

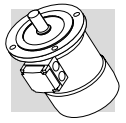

																		d.c. brake FD									Standard	CUS variant
P_n			n	M_n		In 460V	η%			cos φ	$\frac{I_s}{I_n}$	$\frac{M_s}{M_n}$	$\frac{M_a}{M_n}$	KVA code	J_m x 10^{-4}		IM B5		Mod	M_b		Z_o 1/h		J_m x 10^{-4}		IM B5		CE	CE + UL
kW	hp		min^{-1}	Nm	lb·in	A	100%	75%	50%						kgm^2	lb·ft^2	Kg	lbs		Nm	lb·in	NB	SB	kgm^2	lb·ft^2	Kg	lbs		
0.12	0.16	**BX 63A 4**	1700	0.7	5.9	0.49	66.0	63.1	56.0	0.50	4.1	3.8	2.7	L	1.82	0.004321032	3.2	7.0	**FD 02**	1.75	15	8900	11000	2.4	0.0057	4.9	11	•	
0.18	0.25	**BX 63B 4**	1695	1.0	9.0	0.52	69.5	69.5	67.9	0.57	4.3	3.2	3.0	J	2.9	0.0069	5.1	11	**FD 02**	3.5	31	7000	9000	3.5	0.0083	6.8	12	•	
0.25	0.33	**BX 63C 4**	1710	1.4	12.4	0.71	73.4	73.6	67.7	0.58	4.8	3.8	3.1	K	4.3	0.0102	5.4	12	**FD 02**	3.5	31	5800	7700	4.9	0.0116	7.0	16	•	
0.25	0.33	**BX 71A 4**	1715	1.4	12.4	0.55	73.4	76.1	71.5	0.71	5.2	2.8	2.1	G	6.3	0.0150	5.5	13	**FD 03**	3.5	31	5700	8100	8.4	0.0190	8.4	19	•	
0.37	0.55	**BX 71B 4**	1735	2.0	17.7	0.9	78.2	79.2	75.1	0.66	6.9	4.1	3.7	M	10	0.0230	7.3	16	**FD 03**	5	44	4800	6800	11.8	0.0280	10	22	•	
0.55	0.75	**BX 80A 4**	1730	3.0	26.5	1.11	81.1	78.3	74	0.78	7.7	4.3	3.4	L	28	0.0664	12.2	26.9	**FD 04**	15	133	2000	3900	29.6	0.0702	16	36	•	
0.75	1	**BX 80B 4**	1740	4.1	36	1.43	85.5	85.8	84.2	0.78	7.3	2.4	2.2	L	35	0.0831	16	35	**FD 04**	15	133	1400	2800	37	0.0878	20	44	•	
0.75	1	**BX 90SR 4**	1755	4.1	36	1.48	85.5	86.4	83.9	0.73	8.0	3.7	2.5	L	27	0.0641	16	35	**FD 14**	15	133	1800	3700	29	0.0688	20	44	•	•
1.1	1.5	**BX 90S 4**	1740	6.0	53	2.15	86.5	85.9	83.0	0.74	8.2	4.1	2.8	K	27	0.0641	16	35	**FD 14**	15	133	2400	5500	29	0.0688	20	44	•	•
1.5	2	**BX 90LA 4**	1735	8.3	73	2.91	86.5	86.5	84.4	0.75	7.4	3.6	2.5	K	31	0.0736	17	37	**FD 05**	26	230	1700	3600	35	0.0831	23	51	•	•
2.2	3	**BX 100LA 4**	1760	11.9	106	4.4	89.5	88.6	86.2	0.71	9.9	4.8	3.6	N	73	0.1732	29	64	**FD 15**	40	354	470	1300	77	0.1827	36	79	•	•
3	4	**BX 100LB 4**	1750	16.4	145	5.9	89.5	88.9	86.7	0.71	9.1	4.4	3.3	M	73	0.1732	29	64	**FD 15**	40	354	640	1700	77	0.1827	36	79	•	•
3.7	5	**BX 112M 4**	1760	20.0	178	6.7	89.5	89.5	89.1	0.77	10.4	4.7	3.4	M	130	0.3085	38	84	**FD 06S**	60	531	—	790	139	0.3299	48	106	•	•
5.5	7.5	**BX 132SB 4**	1770	30.0	263	9.9	91.7	92.0	90.2	0.76	10.7	5.1	4.6	N	410	0.9729	77	170	**FD 56**	75	664	—	130	420	0.9967	90	198	•	•
7.5	10	**BX 132MA 4**	1770	41.0	358	13.4	91.7	91.3	89.7	0.76	11.0	4.9	4.4	N	410	0.9729	77	170	**FD 06**	100	885	—	230	420	0.9967	90	198	•	•
9.2	12.5	**BX 160MA 4**	1770	50.0	439	15.6	92.4	92.5	91.6	0.80	9.1	4.1	2.6	L	650	1.5425	95	209	**FD 08**	170	1505	—	280	725	1.7205	125	276	•	•
11	15	**BX 160MB 4**	1770	59.0	525	18.2	92.4	92.9	92.0	0.82	9.3	4.0	2.4	L	780	1.8509	110	243	**FD 08**	170	1505	—	230	855	2.0289	140	309	•	•
15	20	**BX 160L 4**	1770	81.0	716	24.5	93.0	93.5	92.5	0.81	10.9	4.8	2.8	M	890	2.1120	121	267	**FD 08**	200	1770	—	240	965	2.2900	151	333	•	•
18.5	25	**BX 180M 4**	1780	99.0	878	28.6	93.6	94.5	93.2	0.85	13.0	2.9	2.7	N	1560	3.7019	155	342	**FD 09**	300	2655	—	130	1760	4.1765	195	430	•	•
22	30	**BX 180L 4**	1775	118.0	1045	33.1	93.6	94.2	93.1	0.87	11.5	2.8	2.4	M	1660	3.9392	163	359	**FD 09**	300	2655	—	130	1860	4.4138	203	448	•	•

Note: for more details on the available energy certifications look at the catalog's dedicated section.
Sizes 100LA and 100LB are only available with UL for USA and not for Canada

4 P	1800 min^{-1} - S1	60 Hz

																			d.c. brake FD							CUS variant	NBR variant
P_n			n	M_n		In 400V	η%			cos φ	I_s/I_n	M_s/M_n	M_a/M_n	KVA code	J_m x 10^{-4}		IM B5		Mod	M_b		J_m x 10^{-4}		IM B5		CE + UL	CE + INMETRO
kW	hp		min^{-1}	Nm	lb·in	A	100%	75%	50%						kgm^2	lb·ft^2	Kg	lbs		Nm	lb·in	kgm^2	lb·ft^2	Kg	lbs		
30	40	**BX 200LAK 4**	1786	160	1416	47.9	94.7	94.8	94.1	0.83	9.4	3.3	3.7	N/A	0.37	0.0009	319	703	**FD 8**	400	3540	0.39	0.0009	337	743	•	•
37	50	**BX 225SAK 4**	1784	198	1752	57.3	95.3	95.5	94.9	0.85	8.8	2.9	3.4	N/A	0.54	0.0013	398	877	**FD 9**	600	5310	0.57	0.0014	426	939	•	•
45	60	**BX 225SBK 4**	1785	240	2124	70.5	95.3	95.4	94.8	0.84	8.9	3.0	3.6	N/A	0.54	0.0013	398	877	**FD 9**	600	5310	0.57	0.0014	426	939	•	•
55	74	**BX 250MAK 4**	1787	293	2593	85.8	95.7	95.8	95.2	0.84	9.1	3.3	3.7	N/A	0.93	0.0022	476	1049	**FD10**	800	7080	1.01	0.0024	521	1149	•	•
75	101	**BX 280SAK 4**	1788	401	3549	117.0	95.9	95.7	94.7	0.84	8.4	2.7	3.1	N/A	1.50	0.0036	665	1466	**FD 100**	1000	8850	1.54	0.0036	771	1700	•	•
90	121	**BX 280SBK 4**	1788	481	4257	140.0	96.1	95.9	95.0	0.84	9.0	3.1	3.3	N/A	1.85	0.0044	725	1598	**FD 100**	1000	8850	1.89	0.0045	831	1832	•	•
110	148	**BX 315SAK 4**	1792	586	5186	172.0	96.1	96.0	95.3	0.84	8.8	2.6	3.4	N/A	2.90	0.0069	1000	2205	**FD 100**	1000	8850	2.94	0.0070	1106	2438	•	•
132	177	**BX 315SBK 4**	1791	704	6230	206.0	96.4	96.3	95.6	0.84	9.0	2.8	3.6	N/A	3.20	0.0076	1065	2348	**FD 160**	1600	14160	3.25	0.0077	1233	2718	•	•
160	215	**BX 315SCK 4**	1791	853	7549	241.0	96.4	96.4	95.9	0.86	9.0	2.9	3.3	N/A	3.90	0.0093	1220	2690	**FD 160**	1600	14160	3.95	0.0094	1388	3060	•	•
200	268	**BX 355SAK 4**	1792	1065	9425	301.0	96.4	96.2	95.4	0.87	8.3	2.2	3.0	N/A	5.90	0.0140	1610	3549	**FD 250**	2500	22125	5.95	0.0141	1778	3920	•	•
250	335	**BX 355MAK 4**	1792	1332	11788	381.0	96.7	96.6	96.0	0.86	8.8	2.7	3.2	N/A	6.90	0.0164	1780	3924	**FD 250**	2500	22125	6.95	0.0165	1948	4295	•	•
315	422	**BX 355MBK 4**	1791	1679	14859	479.0	96.7	96.6	96.1	0.85	8.5	3.1	3.2	N/A	7.20	0.0171	1820	4012	**FD 250**	2500	22125	7.25	0.0172	1988	4383	•	•
355	476	**BX 355MCK 4**	1792	1893	16753	541.0	96.7	96.5	96.9	0.86	7.2	2.4	3.1	N/A	8.40	0.0199	2140	4718	**FD 250**	2500	22125	8.45	0.0201	2308	5088	•	•

Note: for more details on the available energy certifications look at the catalog's dedicated section.

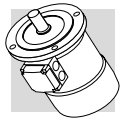

4 P	1500 min^{-1} - S1	50 Hz

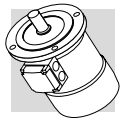

																			d.c. brake FD											
P_n			n	M_n		In 400V	η%			cos φ	$\frac{I_s}{I_n}$	$\frac{M_s}{M_n}$	$\frac{M_a}{M_n}$	KVA code	J_m x 10^{-4}		IM B5		Mod	M_b		Z_o 1/h		J_m x 10^{-4}		IM B5		CE	CE + BIS	CE + CEL
kW	hp		min^{-1}	Nm	lb·in	A	100%	75%	50%						kgm^2	lb·ft^2	Kg	lbs		Nm	lb·in	NB	SB	kgm^2	lb·ft^2	Kg	lbs			
0.12	0.16	**MX 05A 4**	1365	0.8	7.4	0.45	64.8	60	52.9	0.64	2.9	2.4	1.7	G	1.8	0.0043	3.2	7	**FD 02**	1.75	15	8900	11000	2.4	0.0057	4.9	11	•	•	
0.18	0.25	**MX 05B 4**	1370	1.3	11.1	0.57	69.9	69.5	65.9	0.63	3.6	2.6	1.8	G	2.9	0.0069	5.1	11	**FD 02**	3.5	31	7000	9000	3.5	0.0083	6.8	15	•	•	
0.25	0.33	**MX 1SA 4**	1400	1.7	15.5	0.63	73.5	76.0	72.6	0.77	4.3	2.3	2.3	G	6.3	0.0150	5.4	12	**FD 03**	3.5	31	5400	7800	8.4	0.0190	8.1	18	•	•	
0.37	0.5	**MX 1SB 4**	1420	2.5	22.0	1.0	77.3	78.1	73.8	0.71	5.9	3.4	3.1	J	10	0.0230	6.9	15	**FD 03**	5	44	7000	10000	11.8	0.0280	10	22	•	•	
0.55	0.75	**MX 2SA 4**	1425	3.7	33	1.2	80.8	78.6	75.2	0.81	6.8	3.5	2.7	J	28	0.0664	12.2	27	**FD 04**	15	133	2400	4700	29.6	0.0702	16	36	•	•	
0.75	1	**MX 2SB 4**	1425	5.0	45	1.61	82.5	83.9	83.2	0.81	6.5	2.0	1.8	J	35	0.0831	16	35	**FD 04**	15	132	1700	3300	37	0.0878	20	44	•	•	
1.1	1.5	**MX 3SA 4**	1445	7.3	64	2.46	84.1	85.5	83.5	0.75	6.7	3.0	2.0	J	35	0.0831	17	37	**FD 15**	26	132	3700	6200	39	0.0925	24	53	•	•	
1.5	2	**MX 3SB 4**	1445	9.9	88	3.3	85.3	86.8	85.4	0.75	6.7	3.1	2.0	J	43	0.1020	20	44	**FD 15**	26	230	2400	4300	47	0.1115	27	60	•	•	•
2.2	3	**MX 3LA 4**	1445	14.5	129	5.1	86.7	86.2	84.0	0.72	7.2	3.6	2.4	K	58	0.1376	24	53	**FD 15**	40	354	1500	2800	62	0.1471	31	68	•	•	•
3	4	**MX 3LB 4**	1445	19.8	175	6.7	87.7	87.7	86.0	0.74	7.6	3.9	2.6	K	73	0.1732	29	64	**FD 15**	40	354	1500	2700	77	0.1827	36	79	•	•	•
3.7	5	**MX 4SA 4**	1450	24.4	216	7.5	88.4	90.0	88.8	0.80	8.4	3.9	2.5	L	225	0.5339	45	99	**FD 55**	74	354	—	1100	235	0.5577	57	126		•	
4	5.4	**MX 4SA 4**	1460	26.0	232	7.8	88.6	89.9	88.7	0.82	8.1	3.7	2.5	J	225	0.5339	45	99	**FD 56**	75	663	—	1100	235	0.5577	58	128	•		•
5.5	7.5	**MX 4SB 4**	1460	36.0	318	10.6	89.6	89.9	88.8	0.83	8.2	3.6	2.3	J	310	0.7356	57	126	**FD 56**	75	663	—	700	320	0.7594	70	154	•	•	•
7.5	10	**MX 4LA 4**	1460	49.0	434	15.0	90.4	90.9	90.2	0.80	8.4	3.8	2.5	K	360	0.8543	67	148	**FD 06**	100	885	—	700	370	0.8780	80	176	•	•	•
9.2	12.5	**MX 5SA 4**	1465	60.0	531	17.8	91.0	92.1	91.7	0.82	7.9	3.6	2.1	J	650	1.5425	95	209	**FD 08**	170	1505	—	620	725	1.7205	125	276	•		•
11	15	**MX 5SB 4**	1465	72.0	635	20.5	91.4	92.9	92.5	0.84	7.8	3.4	1.9	J	780	1.8509	110	243	**FD 08**	170	1505	—	470	855	2.0289	140	309	•		•
15	20	**MX 5LA 4**	1465	98.0	865	28.1	92.1	93.2	92.6	0.82	9.0	4.1	2.3	K	890	2.1120	121	267	**FD 08**	200	1770	—	510	965	2.2900	151	333	•		•

4 P	1800 min^{-1} - S1	60 Hz

																			d.c. brake FD									Standard	CUS variant
P_n			n	M_n		In 460V	η%			cos φ	$\frac{I_s}{I_n}$	$\frac{M_s}{M_n}$	$\frac{M_a}{M_n}$	KVA code	J_m x 10^{-4}		IM B5		Mod	M_b		Z_o 1/h		J_m x 10^{-4}		IM B5		CE	CE + UL
kW	hp		min^{-1}	Nm	lb·in	A	100%	75%	50%						kgm^2	lb·ft^2	Kg	lbs		Nm	lb·in	NB	SB	kgm^2	lb·ft^2	Kg	lbs		
0.12	0.16	**MX 05A 4**	1700	0.7	5.9	0.49	66.0	63.1	56.0	0.50	4.1	3.8	2.7	L	1.82	0.0043	2.9	6.38	**FD 02**	1.75	15	8900	11000	2.4	0.005695135	4.6	10	•	
0.18	0.25	**MX 05B 4**	1695	1.0	9.0	0.52	69.5	69.5	67.9	0.57	4.3	3.2	3.0	J	2.9	0.0069	4.8	11	**FD 02**	3.5	31	7000	9000	3.5	0.0083	7	12	•	
0.25	0.33	**MX 1SA 4**	1715	1.4	12.4	0.55	73.4	76.1	71.5	0.71	5.2	2.6	2.8	G	6.3	0.0150	5.4	12	**FD 03**	3.5	31	5700	8100	8.4	0.0190	8.1	18	•	
0.37	0.5	**MX 1SB 4**	1735	2.0	17.7	0.9	78.2	79.2	75.1	0.66	6.9	4.1	3.7	M	10	0.0230	6.9	15	**FD 03**	5	44	4800	6800	11.8	0.0280	10	22	•	
0.55	0.75	**MX 2SA 4**	1730	3.0	26.5	1.11	81.1	78.3	74	0.78	7.7	4.3	3.4	L	28	0.0664	12.2	26.9	**FD 04**	15	133	2000	3900	29.6	0.0702	16.1	36	•	
0.75	1	**MX 2SB 4**	1740	4.1	36	1.43	85.5	85.8	84.2	0.78	7.3	2.4	2.2	L	35	0.0831	16	35	**FD 04**	15	133	1400	2800	37	0.0878	20	44	•	
0.75	1	**MX 2SB 4**	1755	4.1	36	1.48	85.5	86.4	83.9	0.73	8.0	3.7	2.5	L	27	0.0641	16	35	**FD 14**	15	132	1800	3700	29	0.0688	20	45	•	•
1.1	1.5	**MX 3SA 4**	1755	6.0	53	2.19	86.5	86.0	83.0	0.73	7.9	3.3	2.5	L	35	0.0831	17	37	**FD 15**	26	133	800	2200	39	0.0925	24	53	•	•
1.5	2	**MX 3SB 4**	1755	8.2	72	2.96	86.5	87.2	85.0	0.72	8.5	3.7	2.9	L	43	0.1020	20	44	**FD 15**	26	230	750	2000	47	0.1115	27	60	•	•
2.2	3	**MX 3LA 4**	1760	11.9	106	4.4	89.5	88.6	86.2	0.71	9.9	4.8	3.6	N	73	0.1732	29	64	**FD 15**	40	354	470	1300	77	0.1827	36	79	•	•
3	4	**MX 3LB 4**	1750	16.4	145	5.9	89.5	88.9	86.7	0.71	9.1	4.4	3.3	M	73	0.1732	29	64	**FD 15**	40	354	640	1700	77	0.1827	36	79	•	•
3.7	5	**MX 4SA 4**	1770	20.0	177	6.6	89.5	89.8	87.7	0.78	9.9	4.7	3.4	M	225	0.5339	45	99	**FD 56**	75	664	—	465	235	0.5577	58	128	•	•
5.5	7.5	**MX 4SB 4**	1770	30.0	263	9.9	91.7	92.0	90.2	0.76	10.7	5.1	4.6	N	410	0.9729	77	170	**FD 56**	75	664	—	130	420	0.9967	90	198	•	•
7.5	10	**MX 4LA 4**	1770	41.0	358	13.4	91.7	91.3	89.7	0.76	11.0	4.9	4.4	N	410	0.9729	77	170	**FD 06**	100	885	—	230	420	0.9967	90	198	•	•
9.2	12.5	**MX 5SA 4**	1770	50.0	439	15.6	92.4	92.5	91.6	0.80	9.1	4.1	2.6	L	650	1.5425	95	209	**FD 08**	170	1505	—	280	725	1.7205	125	276	•	•
11	15	**MX 5SB 4**	1770	59.0	525	18.2	92.4	92.9	92.0	0.82	9.3	4.0	2.4	L	780	1.8509	110	243	**FD 08**	170	1505	—	230	855	2.0289	140	309	•	•
15	20	**MX 5LA 4**	1770	81.0	716	24.5	93.0	93.5	92.5	0.81	10.9	4.8	2.8	M	890	2.1120	121	267	**FD 08**	200	1770	—	240	965	2.2900	151	333	•	•

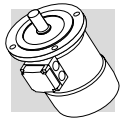

BX - IM B5

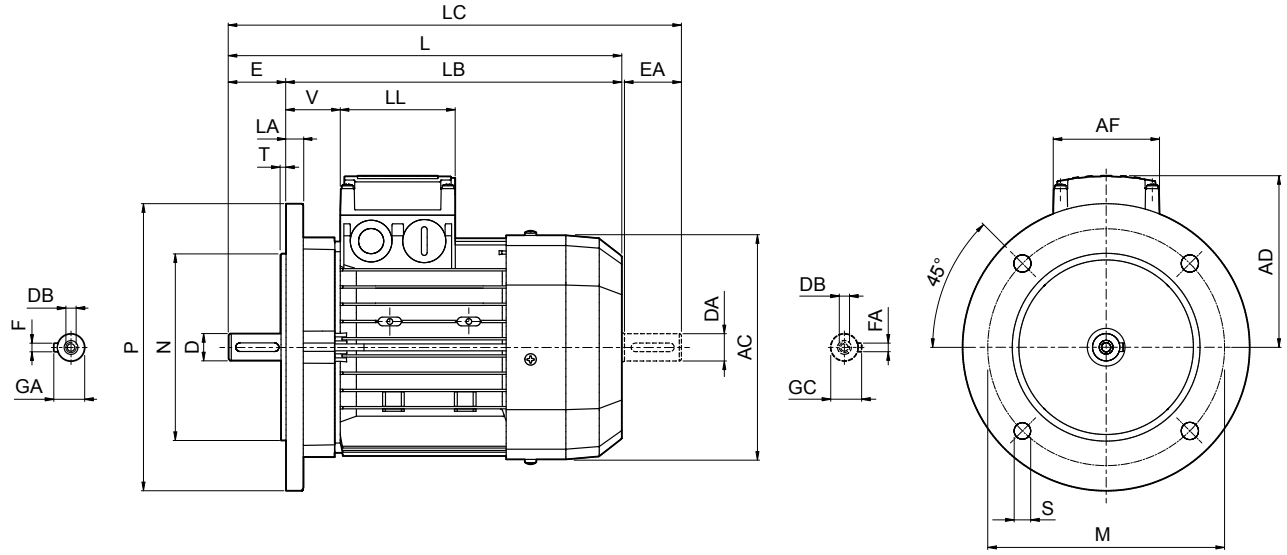

[mm]

	Shaft					Flange						Motor							
	D DA	E EA	DB	GA GC	F FA	M	N	P	S	T	LA	AC	L	LB	LC	AD	AF	LL	V
BX 63A	11 9(1)	23 20(1)	M4 M3(1)	12.5 10.2(1)	4 3(1)	115	95	140	9.5	3	10	121	206	183	228	95	74	80	26
BX 63B																			
BX 63C													226	203	248				
BX 71A	14 11(1)	30 23(1)	M5 M4(1)	16 12.5(1)	5 4(1)	130	110	160		3.5		138	249	219	274	108			37
BX 71B																			
BX 80A	19 14(1)	40 30(1)	M6 M5(1)	21.5 16(1)	6 5(1)	165	130	200	11.5		11.5	156	274	234	306	119			38
BX 80 B													320	280	351				
BX 90 S	24 19(1)	50 40(1)	M8 M6(1)	27 21.5 (1)	8 6(1)							176	326	276	368	133	98	98	44
BX 90 LA																			
BX 100 LA	28 24(1)	60 50(1)	M10 M8(1)	31 27(1)	8 8(1)	215	180	250	14	4	14	195	410	350	462	142			50
BX 100 LB																			
BX 112 M											15	219	430	370	482	157			52
BX 132 SB	38 28(1)	80 60(1)	M12 M10(1)	41 31(1)	10 8(1)	265	230	300			20	258	493	413	556	193	118	118	58
BX 132 MA													528	448	591				
BX 160 MA	42 38(1)	110 80(1)	M16 M12(1)	45 41(1)	12 10(1)	300	250	350	18.5	5	15	310	596	486	680	245	187	187	51
BX 160 MB													640	530	724				
BX 160 L																			
BX 180 M	48 42(1)	110 110(1)	M16 M16(1)	51.5 45(1)	14 12(1)						18	348	708	598	823	261			52
BX 180 L																			
BX 200LAK	55 45(1)		M20 M20(1)	59 48.5(1)	16 14(1)	350	300	400	19		20	423	821	711	934	328	300	311	55
BX 225SAK	60 55(1)	140 110(1)		64 59(1)	18 16(1)	400	350	450	19			465	879	739	1001	348			48
BX 225SBK																			
BX 250MAK	65 55(1)			69 59(1)		500	450	550	19		24	514	884	744	1010	376			
BX 280SAK	75 65(1)			79.5 69(1)	20 18(1)				18		23	567	1086	948	1238	482	434	306	43
BX 280SBK																			
BX 315SAK	80 75(1)	170 140(1)		85 79.5(1)	22 20(1)	600	550	660	23	6	25	645	1204	1034	1352	537	473	347	42
BX 315SBK																			
BX 315SCK													1315	1145	1453				
BX 355SAK	100 75(1)	210 170(1)	M24 M20(1)	106 79.5(1)	28 20(1)	740	680	800				740	1479	1269	1659	603	694	413	50
BX 355MAK																			
BX 355MBK																			
BX 355MCK													1584	1374	1764				

N.B.: 1) These values refer to the rear shaft end (PS).
CEL certification on BX is available from size 100LA to 355MCK

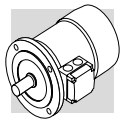

BX - IM B5

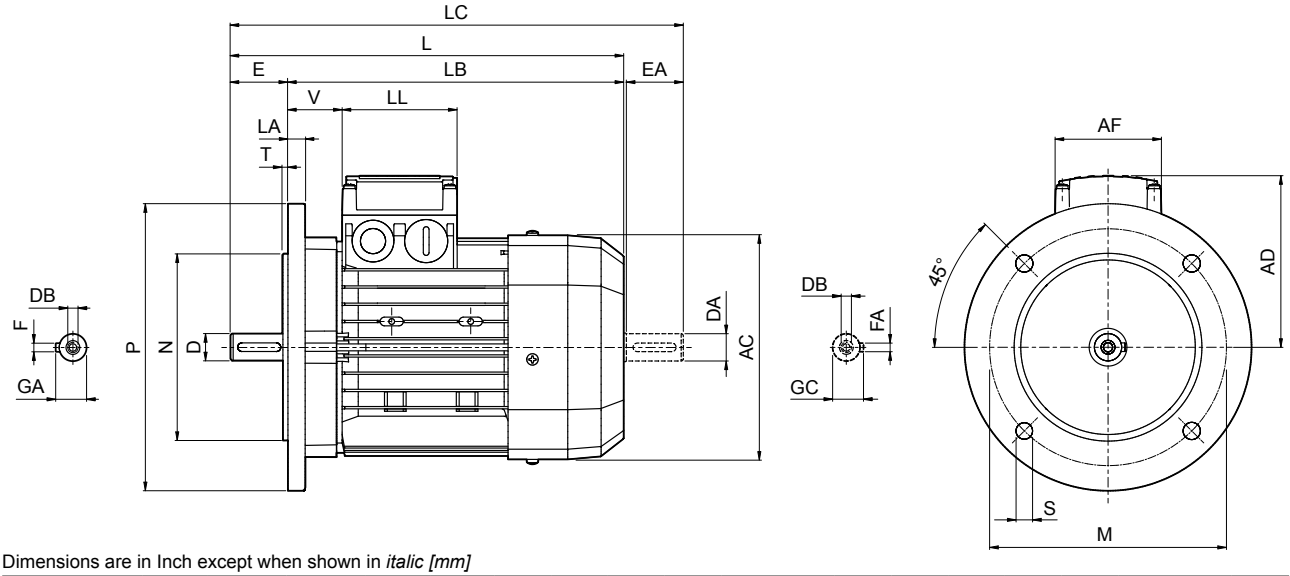

[inch]

Dimensions are in Inch except when shown in *italic [mm]*

	Shaft					Flange						Motor							
	D DA	**E EA**	**DB**	**GA GC**	**F FA**	**M**	**N**	**P**	**S**	**T**	**LA**	**AC**	**L**	**LB**	**LC**	**AD**	**AF**	**LL**	**V**
BX 63A	0.433 0.354(1)	0.906 0.787(1)	*M4* *M3(1)*	0.492 0.402(1)	0.157 0.118(1)	4.528	3.740	5.512	0.374	0.118	0.394	4.764	8.110	7.205	8.976	3.740	2.913	3.150	1.024
BX 63B													8.898	7.992	9.764				
BX 63C																			
BX 71A	0.551 0.433(1)	1.181 0.906(1)	*M5* *M4(1)*	0.630 0.492(1)	0.197 0.157(1)	5.118	4.331	6.299		0.138		5.433	9.803	8.622	10.787	4.252			1.457
BX 71B																			
BX 80A	0.748 0.551(1)	1.575 1.181(1)	*M6* *M5(1)*	0.846 0.630(1)	0.236 0.197(1)	6.496	5.118	7.874	0.453		0.453	6.142	10.787	9.213	12.047	4.685			1.496
BX 80B													12.598	11.024	13.819				
BX 90 S	0.945 0.748(1)	1.969 1.575(1)	*M8* *M6(1)*	1.063 0.846(1)	0.315 0.236(1)							6.929	12.835	10.866	14.488	5.236			1.732
BX 90 LA																			
BX 100 LA	1.102 0.945(1)	2.362 1.969(1)	*M10* *M8(1)*	1.220 1.063(1)	0.315 0.315(1)	8.465	7.087	9.843			0.551	7.677	16.142	13.780	18.189	5.591	3.858	3.858	1.969
BX 100 LB																			
BX 112 M									0.551	0.157	0.591	8.622	16.929	14.567	18.976	6.181			2.047
BX 132 SB	1.496 1.102(1)	3.150 2.362(1)	*M12* *M10(1)*	1.614 1.220(1)	0.394 0.315(1)	10.433	9.055	11.811			0.787	10.157	19.409	16.260	21.890	7.598	4.646	4.646	2.283
BX 132 MA													20.787	17.638	23.268				
BX 160 MA	1.654 1.496(1)	4.331 3.150(1)	*M16* *M12(1)*	1.772 1.614(1)	0.472 0.394(1)	11.811	9.843	13.780	0.728	0.197	0.591	12.205	23.465	19.134	26.772	9.646	7.362	7.362	2.008
BX 160 MB													25.197	20.866	28.504				
BX 160 L																			
BX 180 M	1.890 1.654(1)	4.331 4.331(1)	*M16* *M16(1)*	2.028 1.772(1)	0.551 0.472(1)						0.709	13.701	27.874	23.543	32.402	10.276			2.047
BX 180 L																			
BX 200LAK	2.165 1.772(1)		*M20* *M16(1)*	2.323 1.909(1)	0.630 0.551(1)	13.780	11.811	15.748			0.787	16.654	32.323	27.992	36.772	12.913	11.811	12.244	2.165
BX 225SAK	2.362 2.165(1)	5.512 4.331(1)		2.520 2.323(1)	0.709 0.630(1)	15.748	13.780	17.717	0.748			18.307	34.606	29.094	39.409	13.701			1.890
BX 225SBK																			
BX 250MAK	2.559 2.165(1)			2.717 2.323(1)		19.685	17.717	21.654			0.945	20.236	34.803	29.291	39.764	14.803			
BX 280SAK	2.953 2.559(1)	5.512 5.512(1)	*M20* *M20(1)*	3.130 2.717(1)	0.787 0.709(1)				0.709		0.906	22.323	42.756	37.323	48.740	18.976	17.087	12.047	1.693
BX 280SBK																			
BX 315SAK	3.150 2.953(1)	6.693 5.512(1)		3.346 3.130(1)	0.866 0.787(1)	23.622	21.654	25.984	0.906	0.236	0.984	25.394	47.402	40.709	53.228	21.142	18.622	13.661	1.654
BX 315SBK																			
BX 315SCK													51.772	45.079	57.205				
BX 355SAK	3.937 3.543(1)	8.268 6.693(1)	*M24* *M24(1)*	4.173 3.740(1)	1.102 0.984(1)	29.134	26.772	31.496				29.134	58.228	49.961	65.315	23.740	27.323	16.260	1.969
BX 355MAK																			
BX 355MBK																			
BX 355MCK													62.362	54.094	69.449				

N.B.: 1) These values refer to the rear shaft end (PS).
CEL certification on BX is available from size 100LA to 355MCK

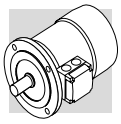

BX - IM B5 - FD

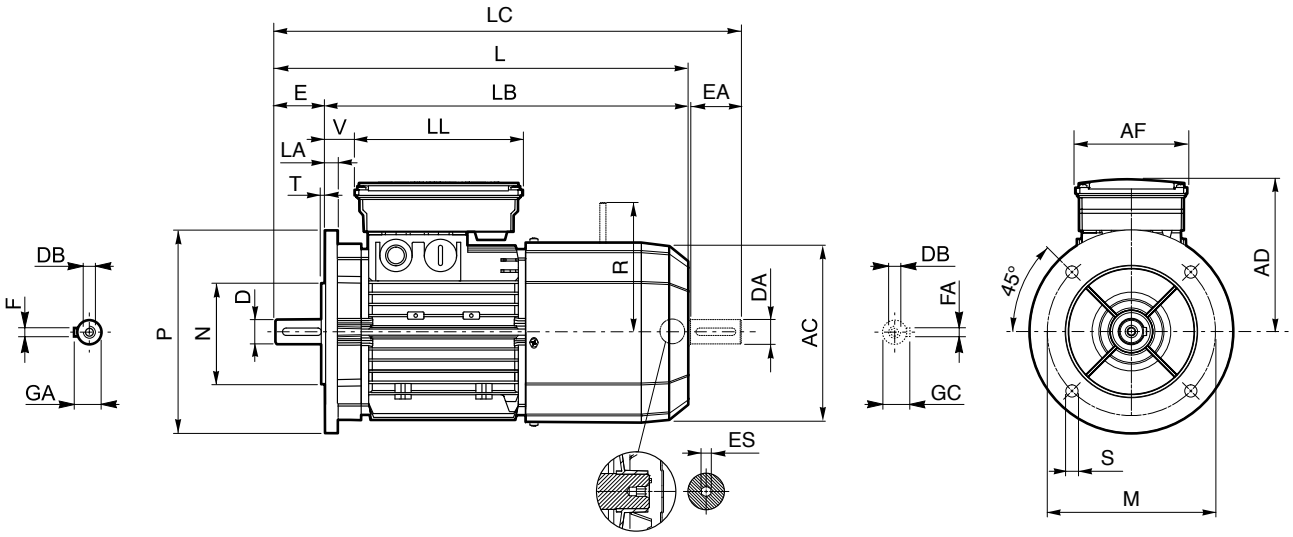

BX-IE3

[mm]

	Shaft					Flange						Motor									
	D DA	E EA	DB	GA GC	F FA	M	N	P	S	T	LA	AC	L	LB	LC	AD	AF	LL	V	R FD	ES (2)
BX 63A	11 9(1)	23 20(1)	M4 M3(1)	12.5 10.2(1)	4 3(1)	115	95	140	9.5	3	10	121	272	249	294	122	98	133	14	96	5
BX 63B																					
BX 63C																					
BX 71A	14 11(1)	30 23(1)	M5 M4(1)	16 12.5(1)	5 4(1)	130	110	160		3.5		138	313	283	338	135			24	103	
BX 71B																					
BX 80A	19 14(1)	40 30(1)	M6 M5(1)	21.5 16(1)	6 5(1)	165	130	200	11.5		11.5	156	346	306	378	143			25	129	
BX 80 B													392	352	423						
BX 90 S	24 19(1)	50 40(1)	M8 M6(1)	27 21.5 (1)	8 6(1)							176	410	360	452	146			32		6
BX 90 LA																				160	
BX 100 LA	28 24(1)	60 50(1)	M10 M8(1)	31 27(1)	8 8(1)	215	180	250			14	195	502	442	554	155	110	165	37		
BX 100 LB									14	4											
BX 112 M											15	219	527	467	579	170			39	199	
BX 132 SB	38 28(1)	80 60(1)	M12 M10(1)	41 31(1)	10 8(1)	265	230	300			16	258	603	523	667	210	140	188	46	204	
BX 132 MA													627	547	690						
BX 160 MA	42 38(1)	110 80(1)	M16 M12(1)	45 41(1)	12 10(1)	300	250	350	18.5	5	15	310	736	626	820	245	187	187	51	266	—
BX 160 MB													780	670	864						
BX 160 L																					
BX 180 M	48 42(1)	110 110(1)	M16 M16(1)	51.5 45(1)	14 12(1)						18	348	866	756	981	261			52	305	
BX 180 L																					
BX 200LAK	55 45(1)		M20 M16(1)	59 48.5(1)	16 14(1)	350	300	400	19	5	20	417	967	857	1082	328	300	311	55	275	
BX 225SAK	60 55(1)	140 110(1)	M20 M20(1)	64 59(1)	18 16(1)	400	350	450				460	1065	925	1180	348			48	308	
BX 225SBK																					
BX 250MAK	65 55(1)			69 59(1)		500	450	550			24	510	1070	930	1240	376				313	
BX 280SAK	75 65(1)	140 140(1)		79.5 69(1)	20 18(1)				18		23	564	1284	1144	1379	482	434	306	43		
BX 280SBK																					
BX 315SAK	80 75(1)	170 140(1)		85 79.5(1)	22 20(1)	600	550	660	23	6	25	639	1493	1323	1643	537	473	347	42	500	
BX 315SBK													1530	1360	1680						
BX 315SCK													1604	1434	1791						
BX 355SAK	100 90(1)	210 170(1)	M24 M24(1)	106 95(1)	28 25(1)	740	680	800				725	1722	1512	1902	603	694	413	50	—	
BX 355MAK																					
BX 355MBK																					
BX 355MCK													1827	1617	2082						

N.B.: 1) These values refer to the rear shaft end (PS). 2) “ES” hexagon is not present with PS option

CEL certification on BX is available from size 100LA to 355MCK

BX - IM B5 - FD

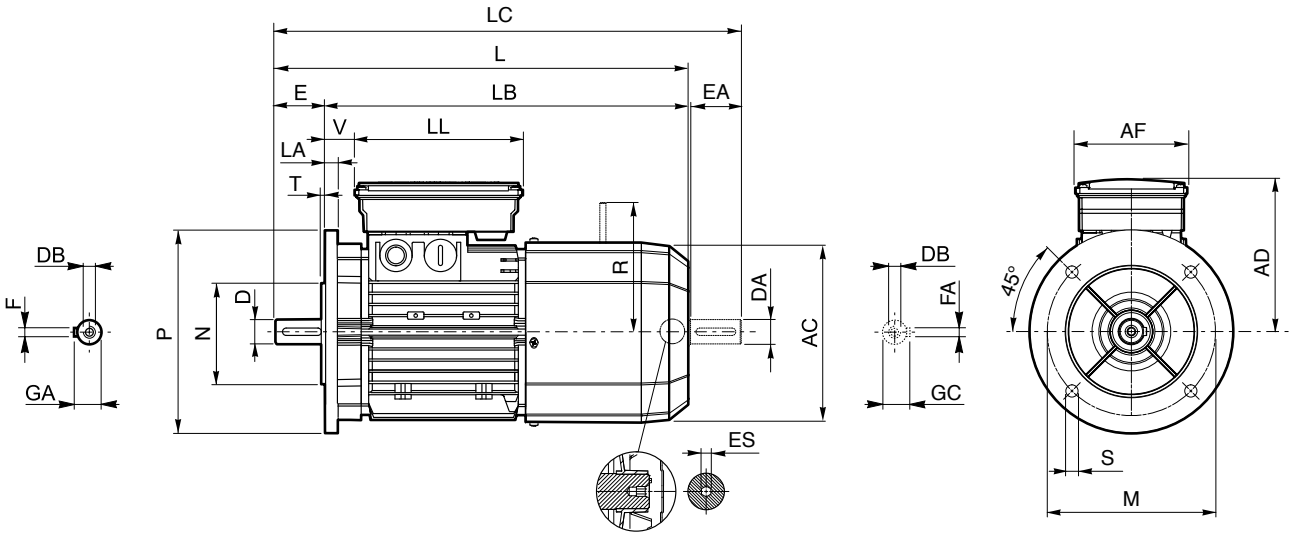

[inch]

Dimensions are in Inch except when shown in *italic [mm]*

	Shaft					Flange						Motor									
	D DA	E EA	DB	GA GC	F FA	M	N	P	S	T	LA	AC	L	LB	LC	AD	AF	LL	V	R FD	ES [2]
BX 63A	0.433 0.354[1]	0.906 0.787[1]	*M4* *M3*[1]	0.492 0.402[1]	0.157 0.118[1]	4.528	3.740	5.512	0.374	0.118	0.394	4.764	10.709	9.803	11.575	4.803	3.858	5.236	0.551	3.78	0.197
BX 63B																					
BX 63C																					
BX 71A	0.551 0.433[1]	1.181 0.906[1]	*M5* *M4*[1]	0.630 0.492[1]	0.197 0.157[1]	5.118	4.331	6.299		0.138		5.433	12.323	11.142	13.307	5.315			0.945	4.055	
BX 71B																					
BX 80A	0.748 0.551[1]	1.575 1.181[1]	*M6* *M5*[1]	0.846 0.630[1]	0.236 0.197[1]	6.496	5.118	7.874	0.453		0.453	6.142	13.622	12.047	14.882	5.630			0.984	5.079	
BX 80B													15.433	13.858	16.654						
BX 90 S	0.945 0.748[1]	1.969 1.575[1]	*M8* *M6*[1]	1.063 0.846[1]	0.315 0.236[1]							6.929	16.142	14.173	17.795	5.748			1.260	6.299	
BX 90 LA																					
BX 100 LA	1.102 0.945[1]	2.362 1.969[1]	*M10* *M8*[1]	1.220 1.063[1]	0.315 0.315[1]	8.465	7.087	9.843			0.551	7.677	19.764	17.402	21.811	6.102	4.331	6.496	1.457		
BX 100 LB																					
BX 112 M									0.551	0.157	0.591	8.622	20.748	18.386	22.795	6.693			1.535	7.835	
BX 132 SB	1.496 1.102[1]	3.150 2.362[1]	*M12* *M10*[1]	1.614 1.220[1]	0.394 0.315[1]	10.433	9.055	11.811			0.787	10.157	23.740	20.591	26.260	8.268	5.512	7.402	1.811	8.031	
BX 132 MA													24.685	21.535	27.165						
BX 160 MA	1.654 1.496[1]	4.331 3.150[1]	*M16* *M12*[1]	1.772 1.614[1]	0.472 0.394[1]	11.811	9.843	13.780	0.728	0.197	0.591	12.205	28.976	24.646	32.283	9.646	7.362	7.362	2.008	10.472	
BX 160 MB													30.709	26.378	34.016						
BX 160 L																					
BX 180 M	1.890 1.654[1]	4.331 4.331[1]	*M16* *M16*[1]	2.028 1.772[1]	0.551 0.472[1]						0.709	13.701	34.094	29.764	38.622	10.276			2.047	12.008	
BX 180 L																					
BX 200LAK	2.165 1.772[1]			2.323 1.909[1]	0.630 0.551[1]	13.780	11.811	15.748	0.748		0.787	16.417	38.071	33.740	42.598	12.913	11.811	12.244	2.165	10.827	0.236 -
BX 225SAK	2.362 2.165[1]	5.512 4.331[1]			0.709 0.630[1]	15.748	13.780	17.717				18.110	41.929	36.417	46.457	13.701			1.890	12.126	
BX 225SBK																					
BX 250MAK	2.559 2.165[1]		*M20* *M16*[1]	2.717 2.323[1]		19.685	17.717	21.654			0.945	20.079	42.126	36.614	48.819	14.803				12.323	
BX 280SAK		5.512 5.512[1]		3.130 2.717[1]	0.787 0.709[1]				0.709		0.906	22.205	50.551	45.039	54.291	18.976	17.087	12.047	1.693		
BX 280SBK																					
BX 315SAK	3.150 2.953[1]	6.693 5.512[1]		3.346 3.130[1]	0.866 0.787[1]	23.622	21.654	25.984	0.906	0.236	0.984	25.157	58.780	52.087	64.685	21.142	18.622	13.661	1.654	19.685	
BX 315SBK													60.236	53.543	66.142						
BX 315SCK													63.150	56.457	70.512						
BX 355SAK	3.937 3.543[1]	8.268 6.693[1]	*M24* *M24*[1]	4.173 3.740[1]	1.102 0.984[1]	29.134	26.772	31.496				28.543	67.795	59.528	74.882	23.740	27.323	16.260	1.969	-	
BX 355MAK																					
BX 355MBK																					
BX 355MCK													71.929	63.661	81.969						

N.B.: 1) These values refer to the rear shaft end (PS). 2) “ES” hexagon is not present with PS option

CEL certification on BX is available from size 100LA to 355MCK

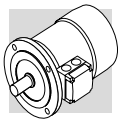

BX - IM B5 - CUS/NBR

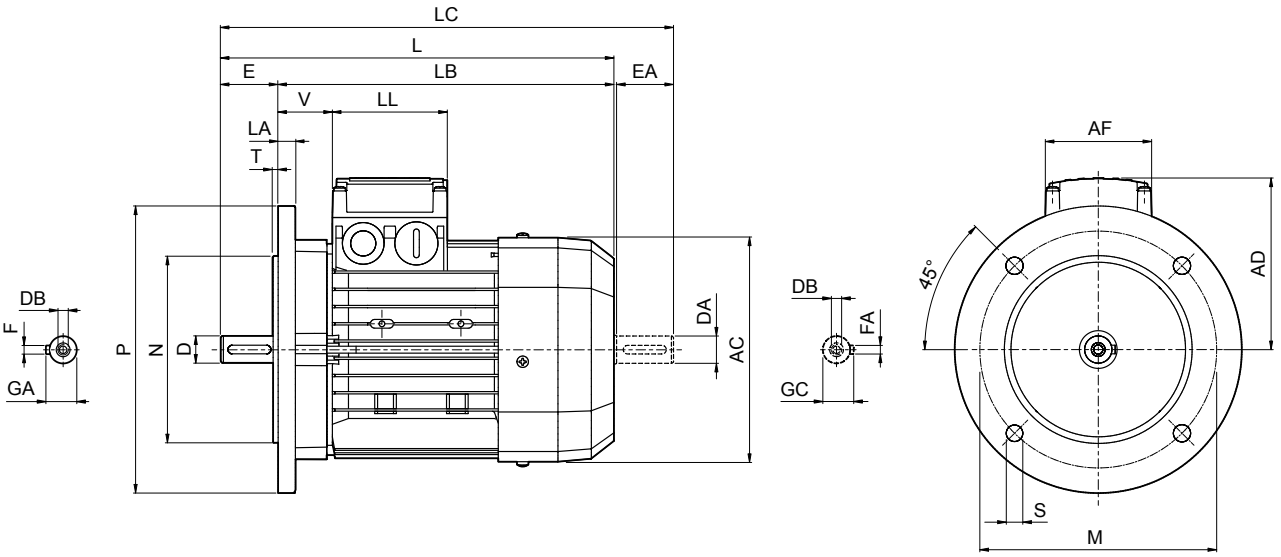

BX-IE3

[mm]

	Shaft					Flange						Motor							
	D DA	**E EA**	**DB**	**GA GC**	**F FA**	**M**	**N**	**P**	**S**	**T**	**LA**	**AC**	**L**	**LB**	**LC**	**AD**	**AF**	**LL**	**V**
BX 90 SR	19 19(1)	40 40(1)	M6 M6(1)	21.5 21.5(1)	6 6(1)	165	130	200	11.5	3.5	11.5	176	316	276	358	133	98	98	44
BX 90 S	24 19(1)	50 40(1)	M8 M6(1)	27 21.5(1)	8 6(1)								326		368				
BX 90 LA																			
BX 100 LA	28 24(1)	60 50(1)	M10 M8(1)	31 27(1)	8 8(1)	215	180	250	14	4	14	195	410	350	462	142			50
BX 100 LB																			
BX 112 M											15	219	430	370	482	157			52
BX 132 SB	38 28(1)	80 60(1)	M12 M10(1)	41 31(1)	10 8(1)	265	230	300			20	258	552	472	615	193	118	118	58
BX 132 MA																			
BX 160 MA	42 38(1)	110 80(1)	M16 M12(1)	45 41(1)	12 10(1)	300	250	350	18.5	5	15	310	596	486	680	245	187	187	51
BX 160 MB													640	530	724				
BX 160 L																			
BX 180 M	48 42(1)	110 110(1)	M16 M16(1)	51.5 45(1)	14 12(1)						18	348	708	598	823	261			52
BX 180 L																			
BX 200LAK	55 45(1)	110 110(1)	M20 M20(1)	59 48.5(1)	16 14(1)	350	300	400	19	5	20	423	821	711	934	328	300	311	55
BX 225SAK	60 55(1)	140 110(1)	M20 M20(1)	64 59(1)	18 16(1)	400	350	450	19	5	20	465	879	739	1001	348	300	311	48
BX 225SBK																			
BX 250MAK	65 55(1)	140 110(1)	M20 M20(1)	69 59(1)	18 16(1)	500	450	550	19	5	24	514	884	744	1010	376	300	311	
BX 280SAK	75 65(1)	140 140(1)	M20 M20(1)	79.5 69(1)	20 18(1)	500	450	550	18	5	23	567	1088	948	1238	482	434	306	43
BX 280SBK																			
BX 315SAK	80 75(1)	170 140(1)	M20 M20(1)	85 79.5(1)	22 20(1)	600	550	660	23	6	25	645	1204	1034	1352	537	473	347	42
BX 315SBK																			
BX 315SCK													1315	1145	1453				
BX 355SAK	100 75(1)	210 170(1)	M24 M20(1)	106 79.5(1)	28 20(1)	740	680	800	23	6	25	740	1479	1269	1659	603	694	413	50
BX 355MAK																			
BX 355MBK																			
BX 355MCK													1584	1374	1764				

N.B.: 1) These values refer to the rear shaft end (PS).

BX - IM B5 - CUS/NBR

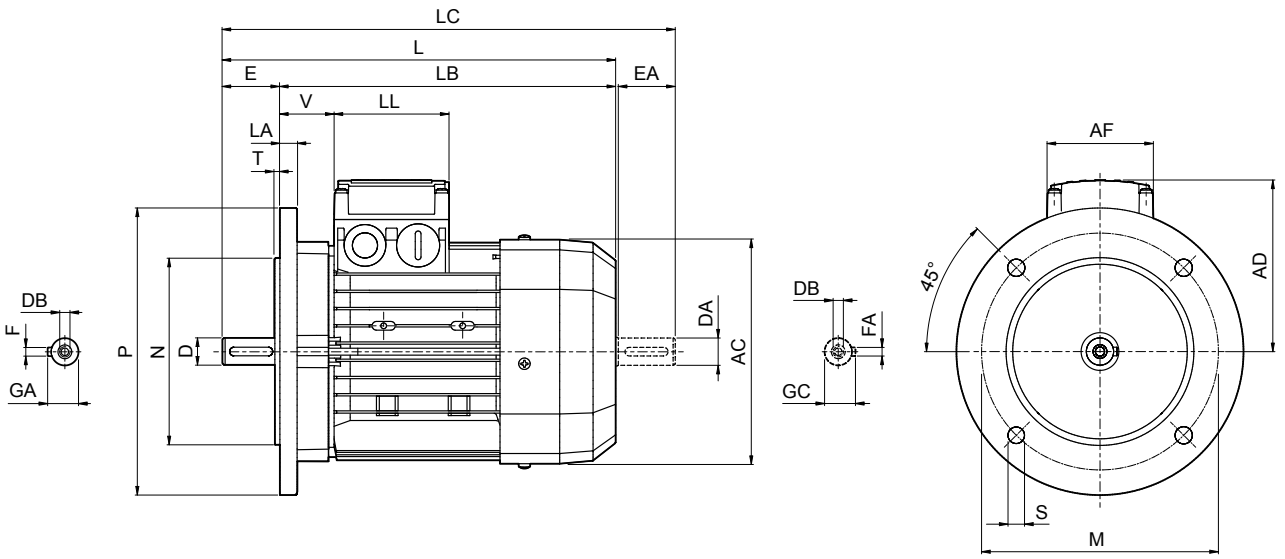

Dimensions are in Inch except when shown in *italic [mm]*

[inch]

	Shaft					Flange						Motor							
	D DA	**E EA**	**DB**	**GA GC**	**F FA**	**M**	**N**	**P**	**S**	**T**	**LA**	**AC**	**L**	**LB**	**LC**	**AD**	**AF**	**LL**	**V**
BX 90 SR	0.748 0.748(1)	1.575 1.575(1)	*M6* *M6(1)*	0.846 0.846(1)	0.236 0.236(1)	6.496	5.118	7.874	0.453	0.138	0.453	6.929	12.441	10.866	14.094	5.236	3.858	3.858	1.732
BX 90 S	0.945 0.748(1)	1.969 1.575(1)	*M8* *M6(1)*	1.063 0.846(1)	0.315 0.236(1)								12.835		14.488				
BX 90 LA																			
BX 100 LA	1.102 0.945(1)	2.362 1.969(1)	*M10* *M8(1)*	1.220 1.063(1)	0.315 0.315(1)	8.465	7.087	9.843	0.551	0.157	0.551	7.677	16.142	13.780	18.189	5.591			1.969
BX 100 LB																			
BX 112 M											0.591	8.622	16.929	14.567	18.976	6.181			2.047
BX 132 SB	1.496 1.102(1)	3.150 2.362(1)	*M12* *M10(1)*	1.614 1.220(1)	0.394 0.315(1)	10.433	9.055	11.811			0.787	10.157	21.732	18.583	24.213	7.598	4.646	4.646	2.283
BX 132 MA																			
BX 160 MA	1.654 1.496(1)	4.331 3.150(1)	*M16* *M12(1)*	1.772 1.614(1)	0.472 0.394(1)	11.811	9.843	13.780	0.728		0.591	12.205	23.465	19.134	26.772	9.646	7.362	7.362	2.008
BX 160 MB													25.197	20.866	28.504				
BX 160 L																			
BX 180 M	1.890 1.654(1)	4.331 4.331(1)	*M16* *M16(1)*	2.028 1.772(1)	0.551 0.472(1)						0.709	13.701	27.874	23.543	32.402	10.276			2.047
BX 180 L																			
BX 200LAK	2.165 1.772(1)		*M20 M20(1)*	2.323 1.909(1)	0.630 0.551(1)	13.780	11.811	15.748		0.197	0.787	16.654	32.323	27.992	36.772	12.913	11.811	12.244	2.165
BX 225SAK	2.362 2.165(1)	5.512 4.331(1)		2.520 2.323(1)	0.709 0.630(1)	15.748	13.780	17.717	0.748		0.787	18.307	34.606	29.094	39.409	13.701			1.890
BX 225SBK											0.787								
BX 250MAK	2.559 2.165(1)			2.717 2.323(1)		19.685	17.717	21.654			0.945	20.236	34.803	29.291	39.764	14.803			
BX 280SAK	2.953 2.559(1)	5.512 5.512(1)		3.130 2.717(1)	0.787 0.709(1)				0.709		0.906	22.323	42.835	37.323	48.740	18.976	17.087	12.047	1.693
BX 280SBK											0.906								
BX 315SAK	3.150 2.953(1)	6.693 5.512(1)		3.346 3.130(1)	0.866 0.787(1)	23.622	21.654	25.984	0.906	0.236	0.984	25.394	47.402	40.709	53.228	21.142	18.622	13.661	1.654
BX 315SBK											0.984		60.236	53.543	66.142				
BX 315SCK											0.984		51.772	45.079	57.205				
BX 355SAK	3.937 2.953(1)	8.268 6.693(1)	*M24 M20(1)*	4.173 3.130(1)	1.102 0.787(1)	29.134	26.772	31.496			0.984	29.134	58.228	49.961	65.315	23.740	27.323	16.260	1.969
BX 355MAK											0.984								
BX 355MBK											0.984		62.362	54.094	69.449				
BX 355MCK											0.984								

N.B.: 1) These values refer to the rear shaft end (PS).

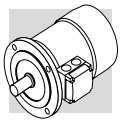

BX - IM B5 - FD - CUS/NBR

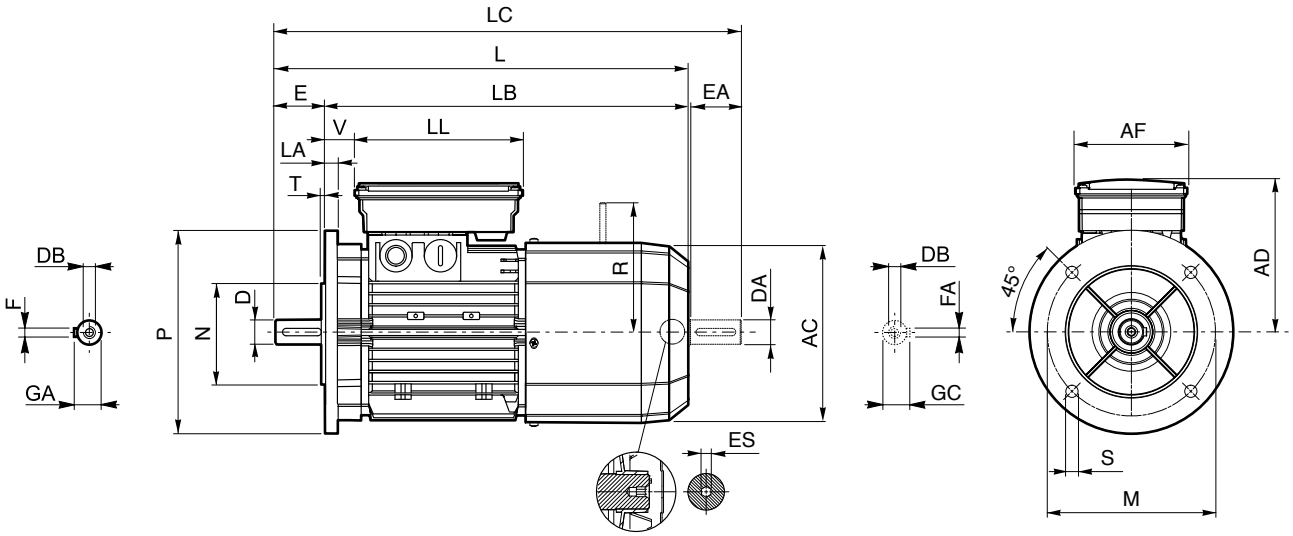

BX-IE3

[mm]

	Shaft					Flange						Motor									
	D DA	E EA	DB	GA GC	F FA	M	N	P	S	T	LA	AC	L	LB	LC	AD	AF	LL	V	R FD	ES (2)
BX 90 SR	19 19(1)	40 40(1)	M6 M6(1)	21.5 21.5(1)	6 6(1)	165	130	200	11.5	3.5	11.5	176	400	360	442	146	110	165	32	129	6
BX 90 S	24 19(1)	50 40(1)	M8 M6(1)	27 21.5(1)	8 6(1)								410		452						
BX 90 LA																				160	
BX 100 LA	28 24(1)	60 50(1)	M10 M8(1)	31 27(1)	8 8(1)	215	180	250	14	4	14	195	502	442	554	155			37		
BX 100 LB																					
BX 112 M											15	219	527	467	579	170			39	199	
BX 132 SB	38 28(1)	80 60(1)	M12 M10(1)	41 31(1)	10 8(1)	265	230	300			16	258	661	581	724	210	140	188	46	204	
BX 132 MA																					
BX 160 MA	42 38(1)	110 80(1)	M16 M12(1)	45 41(1)	12 10(1)	300	250	350	18.5	5	15	310	736	626	820	245	187	187	51	266	—
BX 160 MB													780	670	864						
BX 160 L																					
BX 180 M	48 42(1)	110 110(1)	M16 M16(1)	51.5 45(1)	14 12(1)						18	348	866	756	981	261			52	305	
BX 180 L																					
BX 200LAK	55 45(1)		M20 M16(1)	59 48.5(1)	16 14(1)	350	300	400	19	5	20	417	967	857	1082	328	300	311	55	275	
BX 225SAK	60 55(1)	140 110(1)	M20 M20(1)	64 59(1)	18 16(1)	400	350	450				460	1065	925	1180	348			48	308	
BX 225SBK																					
BX 250MAK	65 55(1)			69 59(1)		500	450	550			24	510	1070	930	1240	376				313	
BX 280SAK	75 65(1)	140 140(1)		79.5 69(1)	20 18(1)				18		23	564	1284	1144	1379	482	434	306	43		
BX 280SBK																					
BX 315SAK	80 75(1)	170 140(1)		85 79.5(1)	22 20(1)	600	550	660	23	6	25	639	1493	1323	1643	537	473	347	42	500	
BX 315SBK													1530	1360	1680						
BX 315SCK													1604	1434	1791						
BX 355SAK	100 90(1)	210 170(1)	M24 M24(1)	106 95(1)	28 25(1)	740	680	800				725	1722	1512	1902	603	694	413	50	—	
BX 355MAK																					
BX 355MBK																					
BX 355MCK													1827	1617	2082						

N.B.: 1) These values refer to the rear shaft end (PS). 2) “ES” hexagon is not present with PS option

BX - IM B5 - FD - CUS/NBR

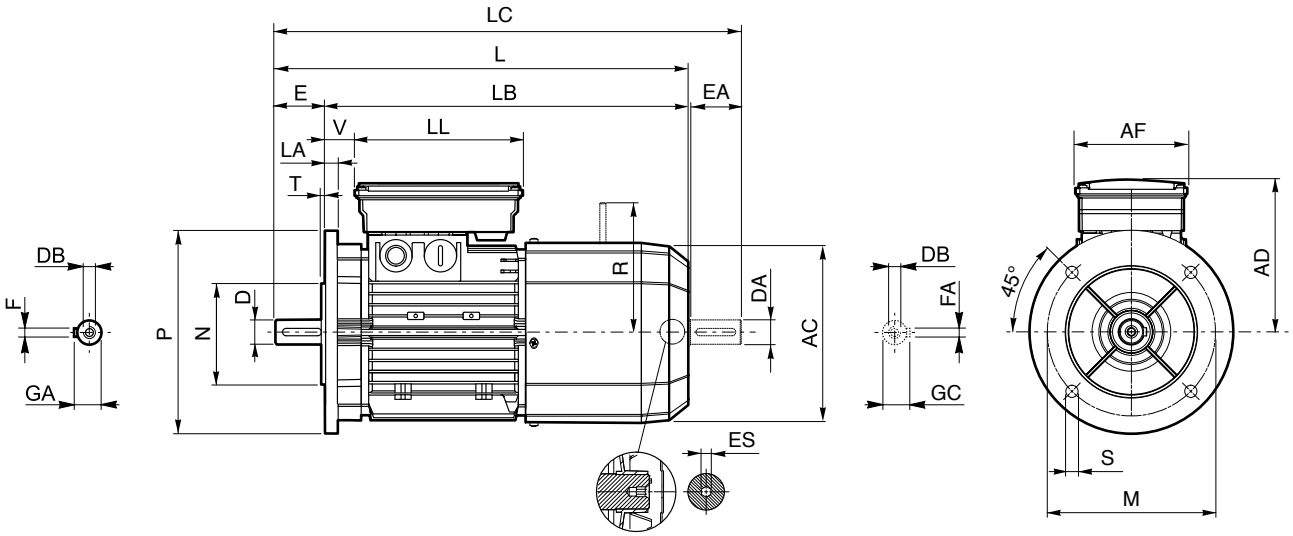

MX-IE3

[inch]

Dimensions are in Inch except when shown in *italic [mm]*

	Shaft					Flange						Motor									
	D DA	E EA	DB	GA GC	F FA	M	N	P	S	T	LA	AC	L	LB	LC	AD	AF	LL	V	R FD	ES (2)
BX 90 SR	0.748 0.748(1)	1.575 1.575(1)	*M6* *M6*(1)	0.846 0.846(1)	0.236 0.236(1)	6.496	5.118	7.874	0.453	0.138	0.453	6.929	15.748	14.173	17.402	5.748	4.331	6.496	1.260	5.079	0.236
BX 90 S	0.945 0.748(1)	1.969 1.575(1)	*M8* *M6*(1)	1.063 0.846(1)	0.315 0.236(1)								16.142		17.795						
BX 90 LA																				6.299	
BX 100 LA	1.102 0.945(1)	2.362 1.969(1)	*M10* *M8*(1)	1.220 1.063(1)	0.315 0.315(1)	8.465	7.087	9.843	0.551	0.157	0.551	7.677	19.764	17.402	21.811	6.102			1.457		
BX 100 LB																					
BX 112 M											0.591	8.622	20.748	18.386	22.795	6.693			1.535	7.835	
BX 132 SB	1.496 1.102(1)	3.150 2.362(1)	*M12* *M10*(1)	1.614 1.220(1)	0.394 0.315(1)	10.433	9.055	11.811			0.630	10.157	26.024	22.874	28.504	8.268	5.512	7.402	1.811	8.031	
BX 132 MA																					
BX 160 MA	1.654 1.496(1)	4.331 3.150(1)	*M16* *M12*(1)	1.772 1.614(1)	0.472 0.394(1)	11.811	9.843	13.780	0.728	0.197	0.591	12.205	28.976	24.646	32.283	9.646	7.362	7.362	2.008	10.472	—
BX 160 MB													30.709	26.378	34.016						
BX 160 L																					
BX 180 M	1.890 1.654(1)	4.331 4.331(1)	*M16* *M16*(1)	2.028 1.772(1)	0.551 0.472(1)						0.709	13.701	34.094	29.764	38.622	10.276			2.047	12.008	
BX 180 L																					
BX 200LAK	2.165 1.772(1)		*M20* *M16*(1)	2.323 1.909(1)	0.630 0.551(1)	13.780	11.811	15.748				16.417	38.071	33.740	42.598	12.913			2.165	10.827	
BX 225SAK	2.362 2.165(1)	5.512 4.331(1)		2.520 2.323(1)	0.709 0.630(1)	15.748	13.780	17.717	0.748		0.787	18.110	41.929	36.417	46.457	13.701	11.811	12.244	1.890	12.126	
BX 225SBK																					
BX 250MAK	2.559 2.165(1)			2.717 2.323(1)							0.945	20.079	42.126	36.614	48.819	14.803				12.323	
BX 280SAK	2.953 2.559(1)	5.512 5.512(1)	*M20* *M20*(1)	3.130 2.717(1)	0.787 0.709(1)	19.685	17.717	21.654	0.709		0.906	22.205	50.551	45.039	54.291	18.976	17.087	12.047	1.693		
BX 280SBK																					
BX 315SAK	3.150 2.953(1)	6.693 5.512(1)		3.346 3.130(1)	0.866 0.787(1)	23.622	21.654	25.984	0.906	0.236	0.984	25.157	58.780	52.087	64.685	21.142	18.622	13.661	1.654	19.685	
BX 315SBK													60.236	53.543	66.142						
BX 315SCK													63.150	56.457	70.512						
BX 355SAK	3.937 3.543(1)	8.268 6.693(1)	*M24* *M24*(1)	4.173 3.740(1)	1.102 0.984(1)	29.134	26.772	31.496				28.543	67.795	59.528	74.882	23.740	27.323	16.260	1.969	—	
BX 355MAK																					
BX 355MBK																					
BX 355MCK													71.929	63.661	81.969						

N.B.: 1) These values refer to the rear shaft end (PS). 2) “ES” hexagon is not present with PS option

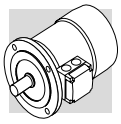

MX

[mm]

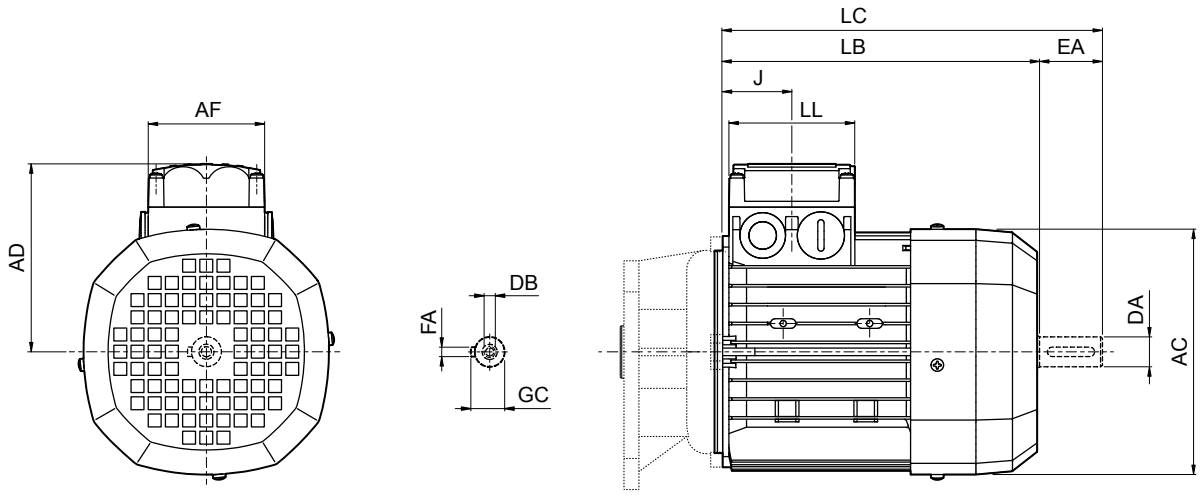

	Rear shaft end					Motor						
	DA	**EA**	**DB**	**GC**	**FA**	**AC**	**LB**	**LC**	**AF**	**LL**	**J**	**AD**
MX 05A	9	20	M3	10	3	121	165	191	74	80	48	95
MX 05B												
MX 1SA	11	23	M4	13	4	138	187	219			45	108
MX 1SB												
MX 2SA	14	30	M5	16	5	156	200	232			44	119
MX 2SB							246	278				
MX 3SA	24	50	M8	27	8	195	265	317	98	98	53.5	142
MX 3SB												
MX 3LA							305	357				
MX 3LB												
MX 4SA	28	60	M10	31		258	361	424	118	118	64.5	193
MX 4SB												
MX 4LA							396	459				
MX 5SA	38	80	M12	41	10	310	418	502	187	187	77	245
MX 5SB							462	546				
MX 5LA												

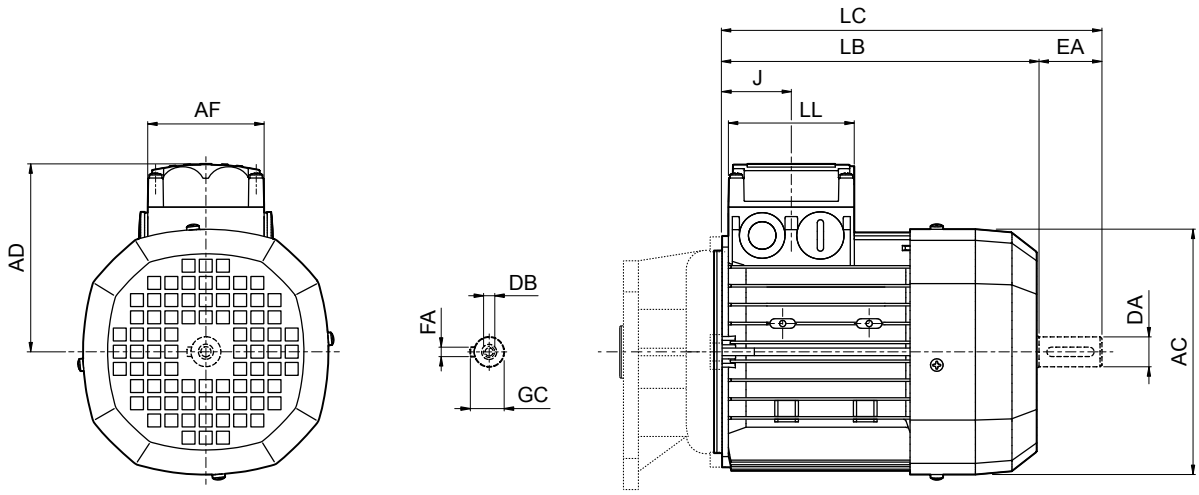

[inch]

Dimensions are in Inch except when shown in *italic [mm]*

	Rear shaft end					Motor						
	DA	**EA**	**DB**	**GC**	**FA**	**AC**	**LB**	**LC**	**AF**	**LL**	**J**	**AD**
MX 05A	0.354	0.787	*M3*	0.394	0.118	4.764	6.496	7.520	2.913	3.150	1.890	3.740
MX 05B												
MX 1SA	0.433	0.906	*M4*	0.512	0.157	5.433	7.362	8.622			1.772	4.252
MX 1SB												
MX 2SA	0.551	1.181	*M5*	0.630	0.197	6.142	7.874	9.134			1.732	4.685
MX 2SB							9.685	10.945				
MX 3SA	0.945	1.969	*M8*	1.063	0.315	7.677	10.433	12.480	3.858	3.858	2.106	5.591
MX 3SB												
MX 3LA							12.008	14.055				
MX 3LB												
MX 4SA	1.102	2.362	*M10*	1.220		10.157	14.213	16.693	4.646	4.646	2.539	7.598
MX 4SB												
MX 4LA							15.591	18.071				
MX 5SA	1.496	3.150	*M12*	1.614	0.394	12.205	16.457	19.764	7.362	7.362	3.031	9.646
MX 5SB							18.189	21.496				
MX 5LA												

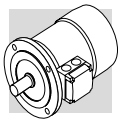

MX - FD

[mm]

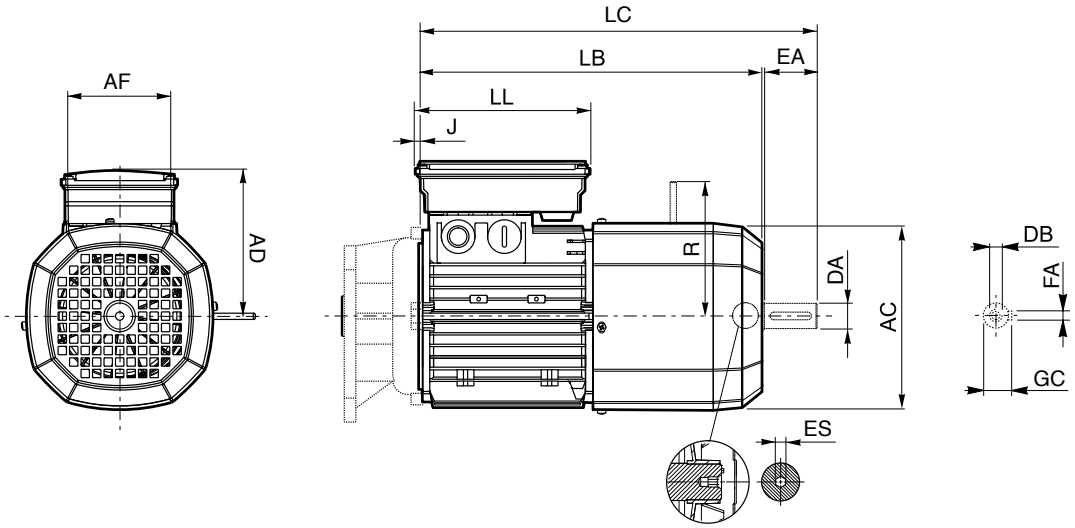

	Rear shaft end					Motor									
	DA	**EA**	**DB**	**GC**	**FA**	**AC**	**LB**	**LC**	**AF**	**LL**	**J**	**AD**	**R**		**ES** [1]
MX 05A	9	20	M3	10	3	121	231	253	98	133	5	122	96	96	5
MX 05B															
MX 1SA	11	23	M4	13	4	138	248	273			8	135	103	103	
MX 1SB															
MX 2SA	14	30	M5	16	5	156	272	303			9	143	129	134	
MX 2SB							318	349							
MX 3SA	24	50	M8	27	8	195	355	407	110	165	7	155	160	160	6
MX 3SB															
MX 3LA							397	450							
MX 3LB															
MX 4SA	28	60	M10	31		258	470	534	140	188		210	204	200	
MX 4SB															
MX 4LA							494	558						226	
MX 5SA	38	80	M12	41	10	310	558	644	187	187	17	245	266	247	—
MX 5SB							602	686							
MX 5LA															

N.B.: 1) “ES” hexagon is not present with PS option

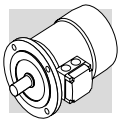

MX - FD

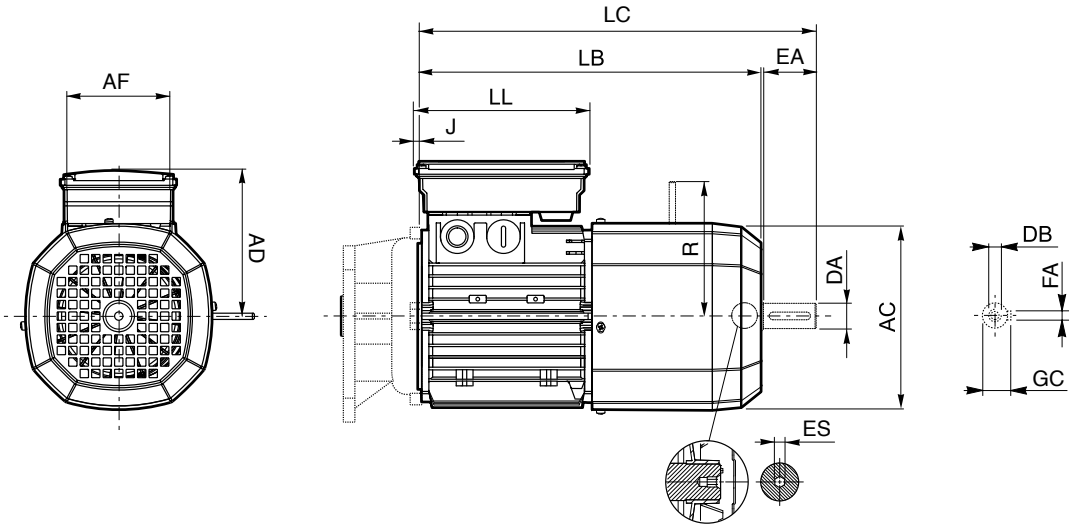

MX-IE3

[inch]

Dimensions are in Inch except when shown in *italic [mm]*

	Rear shaft end					Motor								
	DA	**EA**	**DB**	**GC**	**FA**	**AC**	**LB**	**LC**	**AF**	**LL**	**J**	**AD**	**R** FD	**ES** (1)
MX 05A	0.354	0.787	*M3*	0.394	0.118	4.764	9.094	9.961	3.858	5.236	0.197	4.803	3.780	0.197
MX 05B														
MX 1SA	0.433	0.906	*M4*	0.512	0.157	5.433	9.764	10.748			0.315	5.315	4.055	
MX 1SB														
MX 2SA	0.551	1.181	*M5*	0.630	0.197	6.142	10.709	11.929			0.354	5.630	5.079	
MX 2SB							12.520	13.740						
MX 3SA	0.945	1.969	*M8*	1.063	0.315	7.677	13.976	16.024	4.331	6.496	0.276	6.102	6.299	0.236
MX 3SB														
MX 3LA							15.630	17.717						
MX 3LB														
MX 4SA	1.102	2.362	*M10*	1.220		10.157	18.504	21.024	5.512	7.402		8.268	8.031	
MX 4SB														
MX 4LA							19.449	21.969						
MX 5SA	1.496	3.150	*M12*	1.614	0.394	12.205	21.969	25.354	7.362	7.362	0.669	9.646	10.472	—
MX 5SB							23.701	27.008						
MX 5LA														

N.B.: 1) “ES” hexagon is not present with PS option

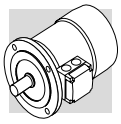

MX CUS/NBR

[mm]

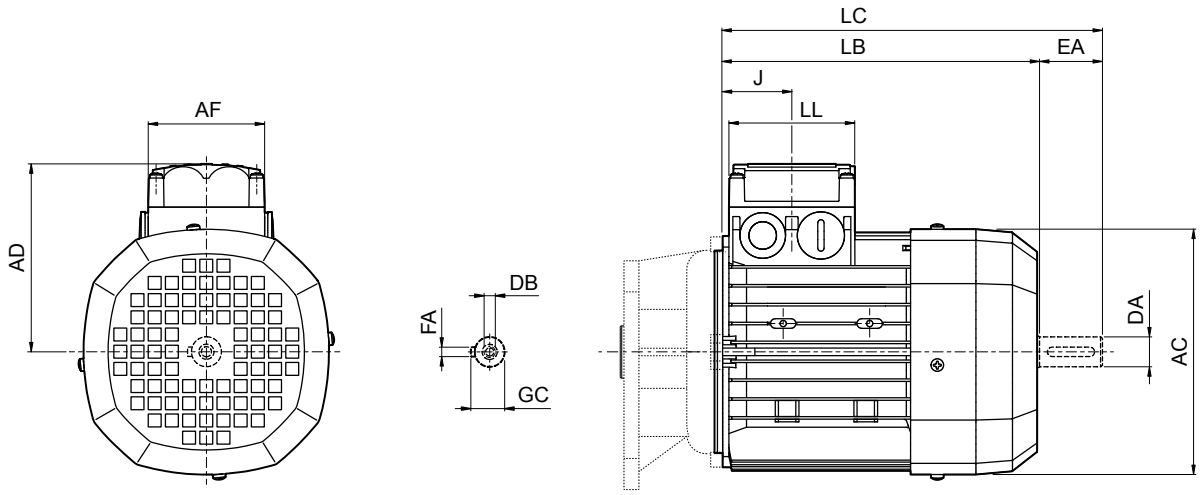

	Rear shaft end					Motor						
	DA	**EA**	**DB**	**GC**	**FA**	**AC**	**LB**	**LC**	**AF**	**LL**	**J**	**AD**
MX 2SB	14	30	M5	16	5	176	262	293	98	98	79	133
MX 3SA	24	50	M8	27	8	195	265	317			53.5	142
MX 3SB												
MX 3LA							305	357				
MX 3LB												
MX 4SA	28	60	M10	31		258	361	424	118	118	64.5	193
MX 4SB							420	483				
MX 4LA												
MX 5SA	38	80	M12	41	10	310	418	502	187	187	77	245
MX 5SB							462	546				
MX 5LA												

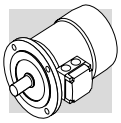

MX CUS/NBR

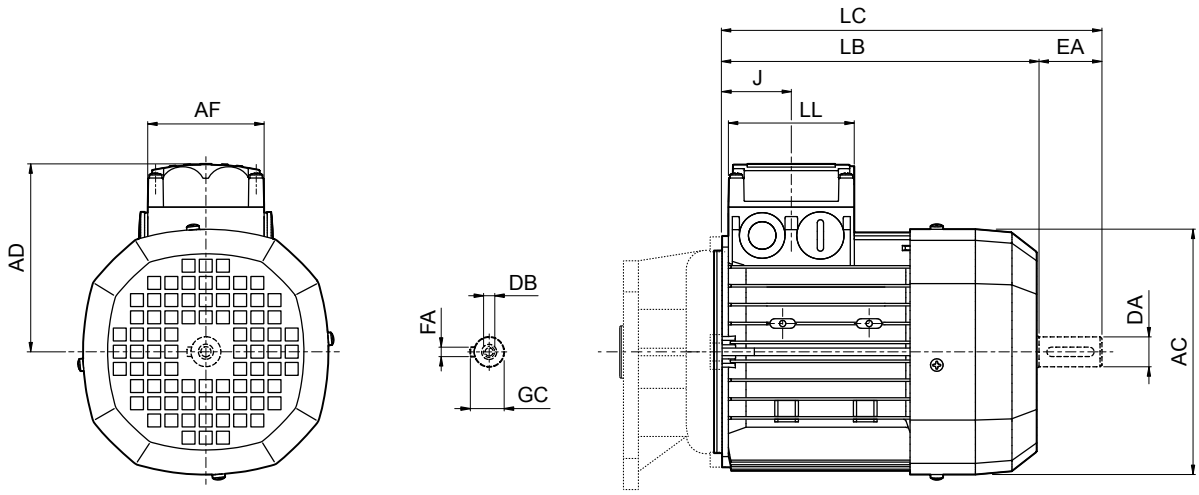

MX-IE3

[inch]

Dimensions are in Inch except when shown in *italic [mm]*

	Rear shaft end					Motor						
	DA	**EA**	**DB**	**GC**	**FA**	**AC**	**LB**	**LC**	**AF**	**LL**	**J**	**AD**
MX 2SB	0.551	1.181	*M5*	0.630	0.197	6.929	10.315	11.535	3.858	3.858	3.110	5.236
MX 3SA	0.945	1.969	*M8*	1.063	0.315	7.677	10.433	12.480			2.106	5.591
MX 3SB												
MX 3LA							12.008	14.055				
MX 3LB												
MX 4SA	1.102	2.362	*M10*	1.220		10.157	14.213	16.693	4.646	4.646	2.539	7.598
MX 4SB							16.535	19.016				
MX 4LA												
MX 5SA	1.496	3.150	*M12*	1.614	0.394	12.205	16.457	19.764	7.362	7.362	3.031	9.646
MX 5SB							18.189	21.496				
MX 5LA												

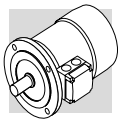

MX - FD CUS/NBR

[mm]

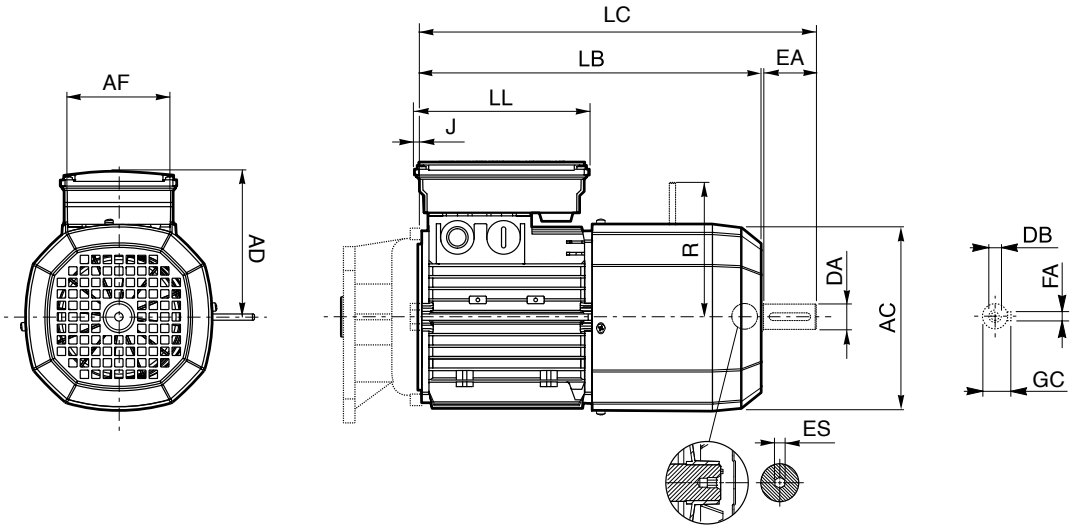

	Rear shaft end					Motor									
	DA	**EA**	**DB**	**GC**	**FA**	**AC**	**LB**	**LC**	**AF**	**LL**	**J**	**AD**	**R**		**ES** [1]
MX 2SB	14	30	M5	16	5	176	347	379	110	165	-17	146	129	134	6
MX 3SA	24	50	M8	27	8	195	355	407			7	155	160	160	
MX 3SB															
MX 3LA							397	450							
MX 3LB															
MX 4SA	28	60	M10	31		258	470	534	140	188		210	204	200	
MX 4SB							528	592							
MX 4LA														226	
MX 5SA	38	80	M12	41	10	310	558	644	187	187	17	245	266	247	—
MX 5SB							602	686							
MX 5LA															

N.B.: 1) “ES” hexagon is not present with PS option

MX - FD CUS/NBR

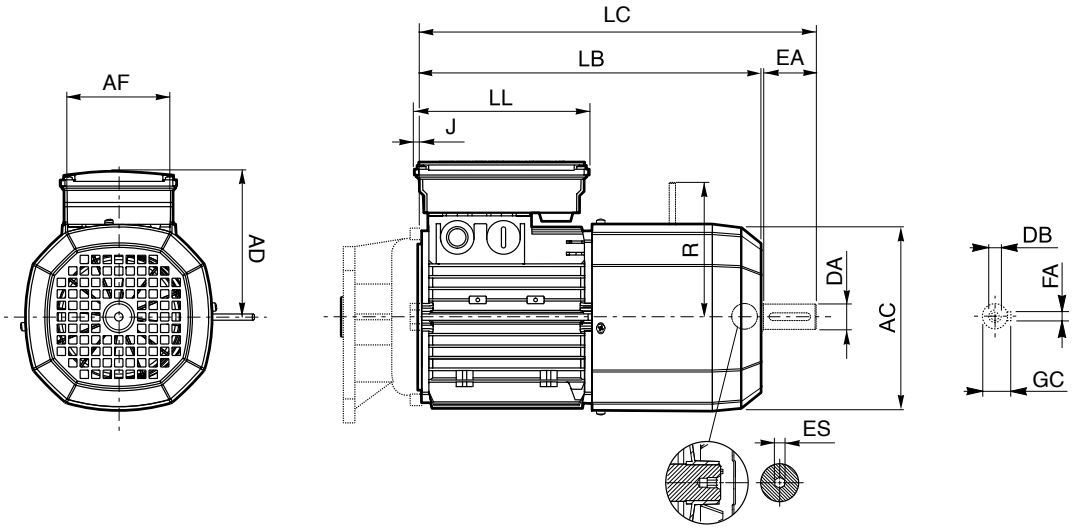

Dimensions are in Inch except when shown in *italic [mm]*

	Rear shaft end					Motor								
	DA	**EA**	**DB**	**GC**	**FA**	**AC**	**LB**	**LC**	**AF**	**LL**	**J**	**AD**	**R** FD	**ES** (1)
MX 2SB	0.551	1.181	*M5*	0.630	0.197	6.929	13.661	14.921	4.331	6.496	-0.669	5.748	5.276	0.236
MX 3SA	0.945	1.969	*M8*	1.063	0.315	7.677	13.976	16.024			0.276	6.102	6.299	
MX 3SB														
MX 3LA							15.630	17.717						
MX 3LB														
MX 4SA	1.102	2.362	*M10*	1.220		10.157	18.504	21.024	5.512	7.402		8.268	7.874	
MX 4SB							20.787	23.307						
MX 4LA													8.898	
MX 5SA	1.496	3.150	*M12*	1.614	0.394	12.205	21.969	25.354	7.362	7.362	0.669	9.646	9.724	—
MX 5SB							23.701	27.008						
MX 5LA														

N.B.: 1) “ES” hexagon is not present with PS option

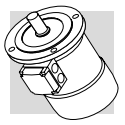

2 P	3000 min^{-1} - S1	50 Hz

																			d.c. brake FD									Standard	CUS variant	BIS variant
P_n			n	M_n		In 400V	η%			cos φ	$\frac{I_s}{I_n}$	$\frac{M_s}{M_n}$	$\frac{M_a}{M_n}$	KVA code	J_m x 10^{-4}		IM B5		Mod	M_b		Z_o 1/h		J_m x 10^{-4}		IM B5		CE	CE + UL	CE + BIS
kW	hp		min^{-1}	Nm	lb·in	A	100%	75%	50%						kgm^2	lb·ft^2	Kg	lbs		Nm	lb·in	NB	SB	kgm^2	lb·ft^2	Kg	lbs			
0.75	1	**BE 80A 2**	2860	2.5	22.1	1.65	80	79.6	76.4	0.83	6.8	3.8	3.5	J	9	0.0214	9.5	20.9	**FD 04**	5	44.2	2300	4300	10.6	0.0252	13.4	30	•	•	•
1.1	1.5	**BE 80B 2**	2845	3.7	32.7	2.35	81.5	82.2	79.9	0.83	6.9	3.8	3.1	J	11.4	0.0271	11.3	24.9	**FD 04**	10	88.5	1500	3100	13	0.0308	15.2	34	•	•	•
1.5	2	**BE 90SA 2**	2865	5	44.3	3.2	81.3	80.7	78.1	0.82	6.8	3.6	2.8	J	12.5	0.0297	12.3	27.1	**FD 14**	15	132	1000	2400	14.1	0.0335	16.5	36	•	•	•
2.2	3	**BE 90L 2**	2870	7.3	64.6	4.7	83.2	83.1	80.8	0.82	6.9	3.1	2.9	J	16.7	0.0396	14	30.9	**FD 05**	26	230	1000	2400	20.7	0.0491	20	44	•	•	•
3	4	**BE 100L 2**	2880	9.9	87.6	6.2	84.6	84.6	83.7	0.83	7.3	3.5	3.1	J	39	0.0925	23	50.7	**FD 15**	26	230	800	1800	43	0.1020	29	64	•	•	•
3.7	5	**BE 112M 2**	2930	12.1	107	7.8	85.5	83	81.2	0.79	7.9	3.5	3.1	J	57	0.1353	28	61.7	**FD 06S**	40	354	—	1100	66	0.1566	39	86		•	•
4	5.4	**BE 112M 2**	2920	13.1	116	8.2	85.8	85.5	84.3	0.82	7.9	3.5	3.1	K	57	0.1353	28	61.7	**FD 06S**	40	354	—	1000	66	0.1566	39	86	•		
5.5	7.5	**BE 132SA 2**	2925	18	159	10.6	87	85	81.7	0.86	8.5	3.6	3.3	K	145	0.3441	42	92.6	**FD 06**	50	443	—	640	156	0.3702	55	121	•	•	•
7.5	10	**BE 132SB 2**	2935	24	212	14.3	88.1	87.4	84.7	0.86	8.8	3.9	3.6	K	178	0.4224	53	117	**FD 06**	50	443	—	700	189	0.4485	66	146	•	•	•
9.2	12.5	**BE 132MB 2**	2920	30	266	16.4	88.8	86.5	84.2	0.91	8.4	3.7	3.3	J	210	0.4983	65	143	**FD 56**	75	664	—	530	221	0.5244	78	172	•	•	
11	15	**BE 160MA 2**	2940	36	319	20	89.4	89.5	88	0.89	8.1	3	2.9	J	340	0.8068	84	185	—	—	—	—	—	—	—	—	—	•	•	
15	20	**BE 160MB 2**	2950	49	434	27.2	90.5	90.5	89.5	0.88	8.5	3	2.8	K	420	0.9967	97	214	—	—	—	—	—	—	—	—	—	•	•	
18.5	25	**BE 160L 2**	2945	60	531	32	90.9	90.5	89.8	0.91	7.7	2.9	2.7	H	490	1.1628	109	240	—	—	—	—	—	—	—	—	—	•	•	

4 P	1500 min^{-1} - S1	50 Hz

																			d.c. brake FD									Standard	CUS variant	BIS variant
P_n			n	M_n		In 400V	η%			cos φ	$\frac{I_s}{I_n}$	$\frac{M_s}{M_n}$	$\frac{M_a}{M_n}$	KVA code	J_m x 10^{-4}		IM B5		Mod	M_b		Z_o 1/h		J_m x 10^{-4}		IM B5		CE	CE + UL	CE + BIS
kW	hp		min^{-1}	Nm	lb·in	A	100%	75%	50%						kgm^2	lb·ft^2	Kg	lbs		Nm	lb·in	NB	SB	kgm^2	lb·ft^2	Kg	lbs			
0.12	0.16	**BE 63A 4**	1360	0.84	7.4	0.45	59.1	59.6	53.5	0.65	3	2	2.2	G	2.3	0.0055	3.9	8.6	**FD 02**	1.75	15.5	11000	14000	2.9	0.0069	5.6	12	•	•	•
0.18	0.25	**BE 63B 4**	1370	1.25	11.1	0.64	64.7	65.1	59.8	0.62	3.5	2.3	2.5	G	3.3	0.0078	5.1	11.2	**FD 02**	3.5	31.0	9000	12000	3.9	0.0093	6.8	15	•	•	•
0.25	0.33	**BE 71A 4**	1380	1.73	15.3	0.68	68.5	68	62	0.78	4	2.3	2.5	H	5.8	0.0138	5.1	11.2	**FD 03**	3.5	31.0	11000	16000	6.9	0.0164	7.8	17	•	•	•
0.37	0.5	**BE 71B 4**	1385	2.55	22.6	1.05	72.7	69.3	64.2	0.75	4.0	2.3	2.2	G	6.9	0.0164	5.9	13.0	**FD 03**	5	44.3	6800	11000	8	0.0190	8.6	19	•	•	•
0.55	0.75	**BE 80A 4**	1430	3.7	32.7	1.38	77.1	73.4	68	0.77	6	2.2	1.9	L	19	0.0451	9.9	21.8	**FD 04**	10	89	4000	7700	20.6	0.0489	13.8	30	•	•	•
0.75	1	**BE 80B 4**	1430	5	44.3	1.65	81	80.5	78	0.81	6.1	3.2	3	H	28	0.0664	12.2	26.9	**FD 04**	15	133	3600	6800	29.6	0.0702	16.1	36	•	•	•
1.1	1.5	**BE 90S 4**	1430	7.4	65.5	2.53	82.5	82	79.5	0.76	6.3	2.9	2.8	J	28	0.0664	13.6	30.0	**FD 14**	15	133	4600	7700	29.6	0.0702	17.8	39	•	•	•
1.5	2	**BE 90LA 4**	1430	10	88.5	3.5	83.5	83	80	0.74	5.9	3.1	3	J	34	0.0807	15.1	33.3	**FD 05**	26	230	3500	6200	38	0.0902	21	47	•	•	•
2.2	3	**BE 100LA 4**	1430	14.7	130	4.9	85.4	85	84	0.76	5.8	3	2.8	H	54	0.1281	22	48.5	**FD 15**	40	354	2700	4700	58	0.1376	29	64	•	•	•
3	4	**BE 100LB 4**	1420	20	177	6.6	85.5	86	85.5	0.77	5.9	2.8	2.6	H	61	0.1448	24	52.9	**FD 15**	40	354	2500	4600	65	0.1542	31	68	•	•	•
3.7	5	**BE 112M 4**	1445	27	239	8.2	86.3	87	84.3	0.76	6.5	2.8	2.8	K	105	0.2492	32	70.5	**FD 06S**	60	531	—	1500	114	0.2705	42	93		•	•
4	5.4	**BE 112M 4**	1440	27	239	8.3	86.6	87	86	0.8	6.5	2.8	2.8	H	105	0.2492	32	70.5	**FD 06S**	60	531	—	1500	114	0.2705	42	93	•		
5.5	7.5	**BE 132S 4**	1460	36	319	11.1	88.5	88.5	87.5	0.81	7.3	2.9	2.9	J	270	0.6407	53	117.0	**FD 56**	75	664	—	1100	281	0.6668	66	146	•	•	•
7.5	10	**BE 132MA 4**	1460	49	434	14.8	89	89	88.5	0.82	6.9	2.9	2.8	H	319	0.7570	59	130.0	**FD 06**	100	885	—	920	330	0.7831	72	159	•	•	•
9.2	12.5	**BE 132MB 4**	1460	60	531	18.1	89.5	89.5	88.5	0.82	6.9	2.9	3	H	360	0.8543	70	154.0	**FD 07**	150	1328	—	950	382	0.9065	86	190	•	•	
11	15	**BE 160M 4**	1465	72	637	21.5	91	91.3	90.5	0.81	6.5	2.8	2.6	H	650	1.5425	99	218.0	**FD 08**	170	1505	—	770	725	1.7205	129	284	•	•	
15	20	**BE 160L 4**	1465	98	867	28.7	90.8	91	90.5	0.83	6.5	2.6	2.3	H	790	1.8747	115	254.0	**FD 08**	200	1770	—	690	865	2.0527	145	320	•	•	
18.5	25	**BE 180M 4**	1465	121	1071	35	91.6	92	91.3	0.83	6.5	2.6	2.5	H	1250	2.9662	135	298.0	**FD 09**	300	2655	—	700	1450	3.4409	175	386	•	•	
22	30	**BE 180L 4**	1465	143	1266	41	91.6	91.8	91.4	0.84	6.8	2.7	2.6	H	1650	3.9155	157	346.0	**FD 09**	300	2655	—	—	1850	4.3901	197	434	•	•	

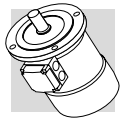

BE-IE2

6 P	1000 min^{-1} - S1	50 Hz

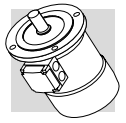

																			d.c. brake FD									Standard	CUS variant	BIS variant
P_n			n	M_n		In 400V	η%			cos φ	$\frac{I_s}{I_n}$	$\frac{M_s}{M_n}$	$\frac{M_a}{M_n}$	KVA code	J_m x 10^{-4}		IM B5		Mod	M_b		Z_o 1/h		J_m x 10^{-4}		IM B5		CE	CE + UL	CE + BIS
kW	hp		min^{-1}	Nm	lb·in	A	100%	75%	50%						kgm^2	lb·ft^2	Kg	lbs		Nm	lb·in	NB	SB	kgm^2	lb·ft^2	Kg	lbs			
0.75	1	**BE 90S 6**	935	7.7	68.2	2.06	75.9	75.9	73	0.69	5.1	3.1	2.9	J	33	0.0783	15	33.1	**FD 14**	15	133	3600	6800	34.6	0.0821	19.2	42	•	•	•
1.1	1.5	**BE 100M 6**	945	11.1	98.2	2.75	78.1	76.2	73	0.74	4.9	2.2	1.9	G	82	0.1946	22	48.5	**FD 15**	26	230	1100	2000	86	0.2041	30	66	•	•	•
1.5	2	**BE 100LA 6**	945	15.2	135	3.9	79.8	77.5	74	0.72	5.6	2.5	2.3	J	95	0.2254	24	52.9	**FD 15**	40	354	1900	4100	99	0.2349	30	66	•	•	•
2.2	3	**BE 112M 6**	950	22	195	5.2	81.8	81.8	79.3	0.74	5.2	2.6	2.3	G	168	0.3987	32	70.5	**FD 06S**	60	531	—	2400	177	0.4200	43	95	•	•	•
3	4	**BE 132S 6**	955	30	266	6.6	83.3	83.3	82.4	0.79	6.1	2.1	1.9	H	295	0.7000	44	97.0	**FD 56**	75	664	—	1400	306	0.7261	57	126	•	•	•
3.7	5	**BE 132MA 6**	970	36.1	320	8.3	84.3	83.6	81.3	0.76	6.9	2.1	2	J	383	0.9089	44	97	**FD 06**	100	885	—	1100	394	0.9350	69	152		•	•
4	5.4	**BE 132MA 6**	965	40	354	8.7	84.9	85	83.1	0.79	6.9	2.2	2	J	383	0.9089	56	123	**FD 06**	100	885	—	1000	394	0.9350	69	152	•		
5.5	7.5	**BE 160MA 6**	965	54	478	11.6	87	87	86.4	0.79	6.6	2.5	2.3	H	740	1.7560	83	183	**FD 08**	170	1505	—	610	815	1.9340	113	249	•	•	
7.5	10	**BE 160MB 6**	965	74	655	15	88	88	87.2	0.82	6.6	2.3	2.1	H	970	2.3018	103	227	**FD 08**	170	1505	—	730	1045	2.4798	133	293	•	•	

4 P	1800 min^{-1} - S1	60 Hz

																			d.c. brake FD								Standard	CUS variant
P_n			n	M_n		In 400V	η%			cos φ	$\frac{I_s}{I_n}$	$\frac{M_s}{M_n}$	$\frac{M_a}{M_n}$	KVA code	J_m x 10^{-4}		IM B5		Mod	M_b		Z_o 1/h		J_m x 10^{-4}		IM B5		CE	CE + UL
kW	hp		min^{-1}	Nm		A	100%	75%	50%						kgm^2	lb·ft^2	Kg	lbs		Nm	lb·in	NB	SB	kgm^2	lb·ft^2	Kg	lbs		
0.12	0.16	**BE63A**	**4**	1700	0.67	5.9	0.41	64.8	62	55	0.61	4	3.4	2.8	J	2.3	0.0055	3.9	8.6	**FD 02**	1.75	15.5	7800	10000	2.9	0.0069	5.6	12	•	•
0.18	0.25	**BE63B**	**4**	1700	1	8.9	0.58	68	67.9	61.2	0.59	4.2	4	3.1	J	3.3	0.0078	5.1	11.2	**FD 02**	3.5	31.0	6500	8400	3.9	0.0093	6.8	15	•	•
0.25	0.33	**BE71A**	**4**	1700	1.4	12.4	1.04	70	68.3	61.6	0.74	5	3.1	3.4	K	5.8	0.0138	5.1	11.2	**FD 03**	3.5	31.0	9900	14000	6.9	0.0164	7.8	17	•	•
0.37	0.5	**BE71B**	**4**	1715	2.06	18.2	0.93	72	71.7	66.3	0.74	5	3	3.2	J	6.9	0.0164	5.9	13.0	**FD 03**	5	44.3	6300	9900	8	0.0190	8.6	19	•	•
0.55	0.75	**BE 80A**	**4**	1740	3	26.6	1.23	75.5	73.1	66.8	0.74	8.7	3.8	3.0	N	19	0.0451	9.9	21.8	**FD 04**	10	88.5	3300	6800	20.6	0.0489	13.8	30	•	•
0.75	1	**BE 80B**	**4**	1745	4.1	36.3	1.46	82.5	81.1	77.6	0.78	7.6	3.5	3.2	K	28	0.0664	12.2	26.9	**FD 04**	15	133	2300	4600	29.6	0.0702	16.1	36	•	•
1.1	1.5	**BE 90S**	**4**	1740	6	53.1	2.25	84	82.7	79	0.73	7.7	3.5	3.2	L	28	0.0664	13.6	30.0	**FD 14**	15	133	2700	6200	29.6	0.0702	17.8	39	•	•
1.5	2	**BE 90LA**	**4**	1740	8.2	72.6	3.1	84.5	83.9	80.7	0.73	7.1	3.6	3.4	K	34	0.0807	15.1	33.3	**FD 05**	26	230	2100	4500	38	0.0902	21	47	•	•
2.2	3	**BE 100LA**	**4**	1745	12	106	4.2	87.5	85.5	83.2	0.76	7	3.3	2.9	J	54	0.1281	22	48.5	**FD 15**	40	354	890	2400	58	0.1376	29	64	•	•
3	4	**BE 100LB**	**4**	1735	16.5	146	5.9	87.5	87.7	86.3	0.76	7	3.2	2.9	K	61	0.1448	24	52.9	**FD 15**	40	354	—	1000	65	0.1542	31	68	•	•
3.7	5	**BE 112M**	**4**	1750	20	177	6.6	87.5	87.5	86.1	0.8	7.8	3.3	3.2	K	105	0.2492	32	70.5	**FD 06S**	60	531	—	730	114	0.2705	42	93		•
4	5.4	**BE 112M**	**4**	1745	21.9	194	7.1	87.5	88	86.7	0.8	7.3	3.0	3.2	J	105	0.2492	32	70.5	**FD 06S**	61	540	—	730	114	0.2705	43	95	•	
5.5	7.5	**BE 132S**	**4**	1760	30	266	9.3	89.5	89.5	87.7	0.83	8.7	3.5	3.5	K	270	0.6407	53	117	**FD 56**	75	664	—	880	281	0.6668	66	146	•	•
7.5	10	**BE 132MA**	**4**	1760	43	381	12.7	89.5	89.5	87.9	0.83	8	3.4	3.3	K	319	0.7570	59	130	**FD 06**	100	885	—	700	330	0.7831	72	159	•	•
9.2	12.5	**BE 132MB**	**4**	1760	50	443	15.6	90	90	88.6	0.82	8.3	3.5	3.6	K	360	0.8543	70	154	**FD 07**	150	1328	—	590	382	0.9065	86	190	•	•
11	15	**BE 160M**	**4**	1765	60	531	18.7	91	91	90	0.81	7.7	2.9	2.8	J	650	1.5425	99	218	**FD 08**	170	1505	—	370	725	1.7205	129	284	•	•
15	20	**BE 160L**	**4**	1770	81	717	25.5	91	90.5	89.5	0.81	7.1	3.1	2.7	J	790	1.8747	115	254	**FD 08**	200	1770	—	320	865	2.0527	145	320	•	•
18.5	25	**BE 180M**	**4**	1765	100	885	30.3	92.4	91.9	90.5	0.83	7.3	2.7	2.5	H	1250	2.9663	135	298	**FD 09**	300	2655	—	200	1450	3.4409	175	386	•	•
22	30	**BE 180L**	**4**	1770	119	1053	36	92.4	92.5	92.2	0.83	8.1	3.3	3.2	J	1650	3.9155	157	346	**FD 09**	300	2655	—	150	1850	4.3901	197	434	•	•

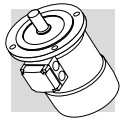

2 P	3000 min^{-1} - S1	50 Hz

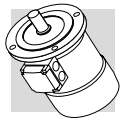

																		d.c. brake FD									Standard	CUS variant
P_n			n	M_n		In 400V	η%			cos φ	$\frac{I_s}{I_n}$	$\frac{M_s}{M_n}$	$\frac{M_a}{M_n}$	KVA code	J_m x 10^{-4}		IM B5		Mod	M_b		Z_o 1/h		J_m x 10^{-4}		IM B5		CE	CE + UL
kW	hp		min^{-1}	Nm	lb·in	A	100%	75%	50%						kgm^2	lb·ft^2	Kg	lbs		Nm	lb·in	NB	SB	kgm^2	lb·ft^2	Kg	lbs		
0.75	1	**ME 2SA 2**	2860	2.5	22.1	1.63	80	79.6	76.4	0.83	6.8	3.8	3.5	J	9	0.0214	8.8	19.4	**FD 04**	5	44.3	2300	4300	10.6	0.0252	12.7	28	•	•
1.1	1.5	**ME 2SB 2**	2845	3.7	32.7	2.35	81.5	82.2	79.9	0.83	6.9	3.8	3.1	J	11.4	0.0271	10.6	23.4	**FD 04**	10	88.5	1500	3100	13	0.0308	14.5	32	•	•
1.5	2	**ME 3SA 2**	2845	5.0	44.3	3.2	81.3	79	76	0.84	6.1	2.9	2.7	H	24	0.0570	15.5	34.2	**FD 15**	13	115	470	1200	28	0.0664	22	49	•	•
2.2	3	**ME 3LA 2**	2895	7.3	64.6	4.8	83.2	83.1	80.8	0.8	6.3	2.7	2.5	H	31	0.0736	18.7	41.2	**FD 15**	26	230	500	1200	35	0.0831	25	56	•	•
3	4	**ME 3LB 2**	2880	9.9	87.6	6.2	84.6	84.6	83.7	0.83	7.3	3.5	3.1	J	39	0.0925	22	48.5	**FD 15**	26	230	800	1800	43	0.1020	28	63	•	•
3.7	5	**ME 4SA 2**	2930	12.1	107	7.8	84.7	83	81.2	0.79	7.9	2.9	2.8	J	101	0.2397	33	72.8	**FD 06**	50	443	—	630	112	0.2658	46	101		•
4	5.4	**ME 4SA 2**	2900	13.2	117	7.8	85.8	84.5	82.2	0.87	7.0	2.9	2.8	H	101	0.2397	33	72.8	**FD 06**	50	443	—	580	112	0.2658	46	101	•	
5.5	7.5	**ME 4SB 2**	2925	18.0	159	10.6	87.0	85.0	81.7	0.86	8.5	3.6	3.3	K	145	0.3441	40	88.2	**FD 06**	50	443	—	640	156	0.3702	53	117	•	•
7.5	10	**ME 4LA 2**	2935	24	212	14.3	88.1	87.4	84.7	0.86	8.8	3.9	3.6	K	178	0.4224	51	112	**FD 06**	50	443	—	700	189	0.4485	64	141	•	•
9.2	12.5	**ME 4LB 2**	2920	30	266	16.4	88.8	86.5	84.2	0.91	8.4	3.7	3.3	J	210	0.4983	60	132	**FD 56**	75	664	—	530	221	0.5244	73	161	•	•
11	15	**ME 5SA 2**	2940	36	319	20.0	89.4	89.5	88.0	0.89	8.1	3.0	2.9	J	340	0.8068	70	154										•	•
15	20	**ME 5SB 2**	2950	49	434	27.2	90.5	90.5	89.5	0.88	8.5	3.0	2.8	K	420	0.9967	83	183										•	•
18.5	25	**ME 5LA 2**	2945	60	531	32	90.9	90.5	89.8	0.91	7.7	2.9	2.7	H	490	1.1628	95	209										•	•

4 P	1500 min^{-1} - S1	50 Hz

																			d.c. brake FD								Standard	CUS variant
P_n			n	M_n		In 400V	η%			cos φ	I_s/I_n	M_s/M_n	M_a/M_n	KVA code	J_m x 10^{-4}		IM B5		Mod	M_b		Z_o 1/h		J_m x 10^{-4}		IM B5		CE	CE + UL
kW	hp		min^{-1}	Nm	lb·in	A	100%	75%	50%						kgm^2	$lb·ft^2$	Kg	lbs		Nm	lb·in	NB	SB	kgm^2	$lb·ft^2$	Kg	lbs		
0.12	0.16	**ME 05A**	**4**	1360	0.84	7.4	0.45	59.1	59.6	53.5	0.65	3	2	2.2	G	2.3	0.0055	3.6	7.9	**FD 02**	1.75	15.5	11000	14000	2.9	0.0069	5.3	12	•	•
0.18	0.25	**ME 05B**	**4**	1370	1.25	11.1	0.64	64.7	65.1	59.8	0.62	3.5	2.3	2.5	G	3.3	0.0078	4.8	10.6	**FD 02**	3.5	31.0	9000	12000	3.9	0.0093	6.5	14	•	•
0.25	0.33	**ME 1SA**	**4**	1380	1.73	15.3	0.68	68.5	68	62	0.78	4	2.3	2.5	H	5.8	0.0138	4.8	10.6	**FD 03**	3.5	31.0	11000	16000	6.9	0.0164	7.5	17	•	•
0.37	0.5	**ME 1SB**	**4**	1385	2.55	22.6	1.05	72.7	69.3	64.2	0.75	4.0	2.3	2.2	G	6.9	0.0164	5.5	12.1	**FD 03**	5	44.3	6800	11000	8	0.0190	8.2	18	•	•
0.55	0.75	**ME 2SA**	**4**	1430	3.7	32.7	1.38	77.1	73.4	68	0.77	6	2.2	1.9	L	19	0.0451	9.9	21.8	**FD 04**	10	88.5	4000	7700	20.6	0.0489	13.8	30	•	•
0.75	1	**ME 2SB**	**4**	1430	5	44.3	1.65	81	80.5	78	0.81	6.1	3.2	3.0	H	28	0.0664	12.2	26.9	**FD 04**	15	133	3600	6800	29.6	0.0702	16.1	36	•	•
1.1	1.5	**ME 3SA**	**4**	1430	7.4	65.5	2.6	82.5	82.0	79.0	0.74	5.5	2.5	2.8	H	34	0.0807	15.5	34.2	**FD 15**	26	230	2700	4700	38	0.0902	22	47	•	•
1.5	2	**ME 3SB**	**4**	1420	10	88.5	3.48	84.0	84.0	83.0	0.74	5.9	2.9	2.9	J	40	0.0949	17	37.5	**FD 15**	26	230	2600	4700	44	0.1044	23	51	•	•
2.2	3	**ME 3LA**	**4**	1430	14.7	130	4.89	85.4	85	84	0.76	5.8	3	2.8	H	54	0.1281	21	46.3	**FD 15**	40	354	2700	4700	58	0.1376	27	60	•	•
3	4	**ME 3LB**	**4**	1420	20	177	6.58	85.5	86.0	85.5	0.77	5.9	2.8	2.6	H	61	0.1448	23	50.7	**FD 15**	40	354	2500	4600	65	0.1542	29	64	•	•
3.7	5	**ME 4SA**	**4**	1460	27	239	7.5	86.6	87.1	85.6	0.82	7.1	3	3.1	K	213	0.5055	42	92.6	**FD 56**	75	664	—	1100	224	0.5316	55	121		•
4	5.4	**ME 4SA**	**4**	1440	27	239	8.25	87.5	86.8	84.0	0.8	7.1	3	3.1	J	213	0.5055	42	92.6	**FD 56**	75	664	—	1100	224	0.5316	55	121	•	
5.5	7.5	**ME 4SB**	**4**	1460	36	319	11.07	88.5	88.5	87.5	0.81	7.3	2.9	2.9	J	270	0.6407	51	112	**FD 56**	75	664	—	1100	281	0.6668	64	141	•	•
7.5	10	**ME 4LA**	**4**	1460	49	434	14.83	89.0	89.0	88.5	0.82	6.9	2.9	2.8	H	319	0.7570	57	126	**FD 06**	100	885	—	920	330	0.7831	70	154	•	•
9.2	12.5	**ME 4LB**	**4**	1460	60	531	18.09	89.5	89.5	88.5	0.82	6.9	2.9	3.0	H	360	0.8543	65	143	**FD 07**	150	1328	—	950	382	0.9065	81	179	•	
11	15	**ME 5SA**	**4**	1465	72	637	21.54	91.0	91.3	90.5	0.81	6.5	2.8	2.6	H	650	1.5425	85	187	**FD 08**	170	1505	—	770	725	1.7205	115	254	•	
15	20	**ME 5LA**	**4**	1465	98	867	28.73	90.8	91.0	90.5	0.83	6.5	2.6	2.3	H	790	1.8747	101	223	**FD 08**	200	1770	—	690	865	2.0527	131	289	•	

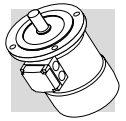

6 P	1000 min^{-1} - S1	50 Hz

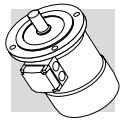

														d.c. brake						a.c. brake				
														FD						FA				
P_n kW		n min^{-1}	M_n Nm	In 400V A	η% 100%	η% 75%	η% 50%	cos φ	$\frac{I_s}{I_n}$	$\frac{M_s}{M_n}$	$\frac{M_a}{M_n}$	J_m x 10^{-4} kgm^2	IM B5 Kg	Mod	M_b Nm	Z_O 1/h NB	Z_O 1/h SB	J_m x 10^{-4} kgm^2	IM B5 Kg	Mod	M_b Nm	Z_O 1/h	J_m x 10^{-4} kgm^2	IM B5 Kg
0.75	**ME 3SA 6**	940	7.6	1.98	75.9	75	70.7	0.72	4.7	2.2	2	33	17	**FD 15**	26	3400	6500	28	21	**FA 15**	26	6500	28	22
1.1	**ME 3LA 6 (*)**	945	11.1	2.75	78.1	76.2	73	0.74	4.9	2.2	1.9	82	21	**FD 15**	26	2700	5000	37	27	**FA 15**	26	5000	37	28
1.5	**ME 3LB 6**	945	15.2	3.8	79.8	77.5	74	0.72	5.6	2.5	2.3	95	23	**FD 15**	40	1900	4100	86	29	**FA 15**	40	4100	86	30
2.2	**ME 4SA 6**	955	22	4.9	81.8	81.8	80	0.8	5.7	1.9	1.7	216	34	**FD 56**	75	—	2100	177	47	**FA 06**	60	2100	177	48
3.7	**ME 4LA 6**	970	36.1	8.3	83.5	83.6	81.3	0.76	6.9	2.2	2	383	54	**FD 06**	100	—	1200	305	70	**FA 06**	100	1200	305	72

4 P	1800 min^{-1} - S1	60 Hz

P_n			n	M_n		In 400V	η%			cos φ	I_s/I_n	M_s/M_n	M_a/M_n	KVA code	J_m x 10^{-4}		IM B5		d.c. brake FD Mod	M_b		Z_o 1/h		J_m x 10^{-4}		IM B5		Standard CE	CUS variant CE + UL
kW	hp		min^{-1}	Nm	lb·in	A	100%	75%	50%						kgm^2	lb·ft^2	Kg	lbs		Nm	lb·in	NB	SB	kgm^2	lb·ft^2	Kg	lbs		
0.12	0.16	**ME05A 4**	1700	0.67	5.9	0.41	64.8	62	55	0.61	4	3.4	2.8	J	2.3	0.0055	3.6	7.9	**FD 02**	1.75	15.5	7800	10000	2.9	0.0069	5.3	12	•	•
0.18	0.25	**ME05B 4**	1700	1	8.9	0.58	68	67.9	61.2	0.59	4.2	4	3.1	J	3.3	0.0078	4.8	10.6	**FD 02**	3.5	31.0	6500	8400	3.9	0.0093	6.5	14	•	•
0.25	0.33	**ME1SA 4**	1700	1.4	12.4	1.04	70	68.3	61.6	0.74	5	3.1	3.4	K	5.8	0.0138	4.8	10.6	**FD 03**	3.5	31.0	9900	14000	6.9	0.0164	7.5	17	•	•
0.37	0.5	**ME1SB 4**	1715	2.06	18.2	0.93	72	71.7	66.3	0.74	5	3	3.2	J	6.9	0.0164	5.5	12.1	**FD 03**	5	44.3	6300	9900	8	0.0190	8.2	18	•	•
0.55	0.75	**ME 2SA 4**	1740	3	26.6	1.23	75.5	73.1	66.8	0.74	8.7	3.8	3.0	N	19	0.0451	9.9	21.8	**FD 04**	10	88.5	3300	6800	20.6	0.0489	13.8	30	•	•
0.75	1	**ME 2SB 4**	1745	4.1	36.3	1.46	82.5	81.1	77.6	0.78	7.6	3.5	3.2	K	28	0.0664	12.2	26.9	**FD 04**	15	133	2300	4600	29.6	0.0702	16.1	36	•	•
1.1	1.5	**ME 3SA 4**	1740	6	53.1	2.25	84	82.7	79	0.73	7.7	3.5	3.2	J	34	0.0807	15.5	34.2	**FD 15**	26	230	1700	3400	38	0.0902	22	47	•	•
1.5	2	**ME 3SB 4**	1740	8.2	72.6	3.1	84.5	83.9	80.7	0.73	7.1	3.6	3.4	K	40	0.0949	17	37.5	**FD 15**	26	230	1000	2800	44	0.1044	23	51	•	•
2.2	3	**ME 3LA 4**	1745	12	106	4.2	87.5	85.5	83.2	0.76	7	3.3	2.9	J	54	0.1281	21	46.3	**FD 15**	40	354	890	2400	58	0.1376	27	60	•	•
3	4	**ME 3LB 4**	1735	16.5	146	5.9	87.5	87.7	86.3	0.76	7	3.2	2.9	K	61	0.1448	23	50.7	**FD 15**	40	354	—	1000	65	0.1542	29	64	•	•
3.7	5	**ME 4SA 4**	1750	20	177	6.6	87.5	87.5	86.1	0.8	7.8	3.3	3.2	J	213	0.5055	42	92.6	**FD 56**	75	664	—	880	224	0.5316	55	121		•
4	5.4	**ME 4SA 4**	1790	21.3	189	7.2	87.5	85.5	82.7	0.82	7.2	3.1	3.2	H	213	0.5055	42	92.6	**FD 56**	75	664	—	880	224	0.5316	55	121	•	
5.5	7.5	**ME 4SB 4**	1760	30	266	9.3	89.5	89.5	87.7	0.83	8.7	3.5	3.5	K	270	0.6407	51	112	**FD 56**	75	664	—	880	281	0.6668	64	141	•	•
7.5	10	**ME 4LA 4**	1760	43	381	12.7	89.5	89.5	87.9	0.83	8	3.4	3.3	K	319	0.7570	57	126	**FD 06**	100	885	—	700	330	0.7831	70	154	•	•
9.2	12.5	**ME 4LB 4**	1760	50	443	15.6	90	90	88.6	0.82	8.3	3.5	3.6	K	360	0.8543	65	143	**FD 07**	150	1328	—	590	382	0.9065	81	179	•	•
11	15	**ME 5SA 4**	1765	60	531	18.7	91	91	90	0.81	7.7	2.9	2.8	J	650	1.5425	85	187	**FD 08**	170	1505	—	360	725	1.7205	115	254	•	•
15	20	**ME 5LA 4**	1770	81	717	25.5	91	90.5	89.5	0.81	7.1	3.1	2.7	J	790	1.8747	101	223	**FD 08**	200	1770	—	320	865	2.0527	131	289	•	•

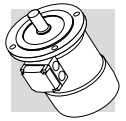

BE - IM B5

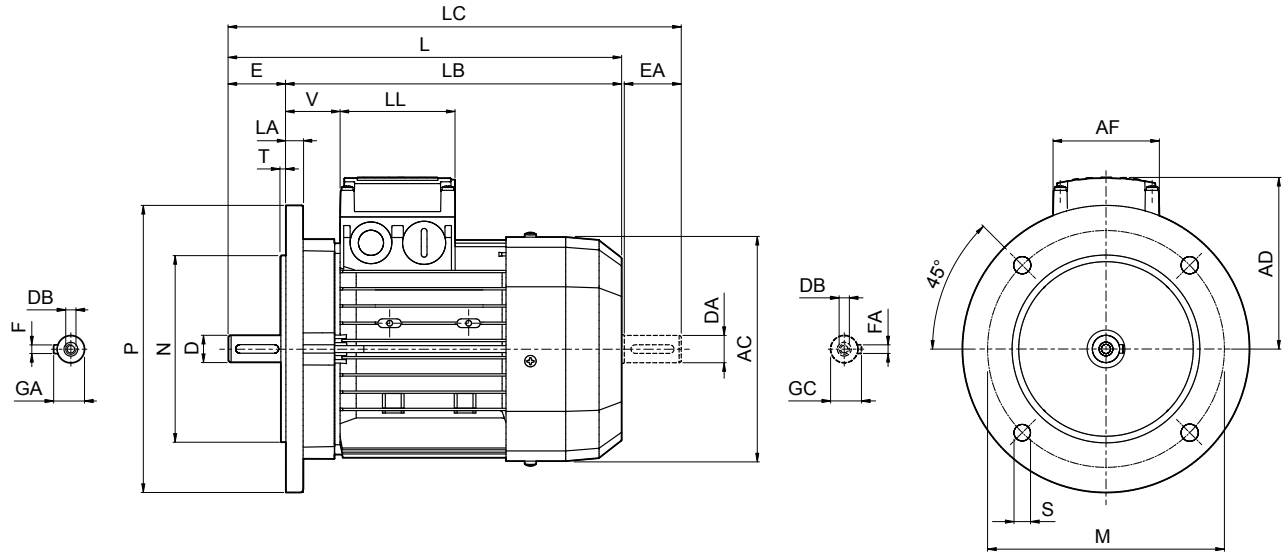

BE-IE2

[mm]

	Shaft					Flange						Motor							
	D DA	E EA	DB	GA GC	F FA	M	N	P	S	T	LA	AC	L	LB	LC	AD	AF	LL	V
BE 63	11	23	M4	12.5	4	115	95	140	9.5	3	10	121	207	184	232	95	74	80	26
BE 71	14	30	M5	16	5	130	110	160		3.5		138	249	219	281	108			37
BE 80	19	40	M6	21.5	6	165	130	200	11.5		11.5	156	274	234	315	119			38
BE 90 S	24	50	M8	27	8							176	326	276	378	133	98	98	44
BE 90 L																			
BE 100	28	60	M10	31		215	180	250	14	4	14	195	367	307	429	142			50
BE 112											15	219	385	325	448	157			52
BE 132 S	38	80	M12	41	10	265	230	300			20	258	493	413	576	193	118	118	58
BE 132 MA																			
BE 132 MB													528	448	611				
BE 160 M	42 38(1)	110 80(1)	M16 M12(1)	45 41(1)	12 10(1)	300	250	350	18.5	5	15	310	596	486	680	245	187	187	51
BE 160 L													640	530	724				
BE 180 M	48 42(1)	110 110(1)	M16 M16(1)	51.5 45(1)	14 12(1)						18	348	708	598	823	261			52
BE 180 L																			

N.B.: 1) These values refer to the rear shaft end.

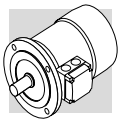

BE - IM B5

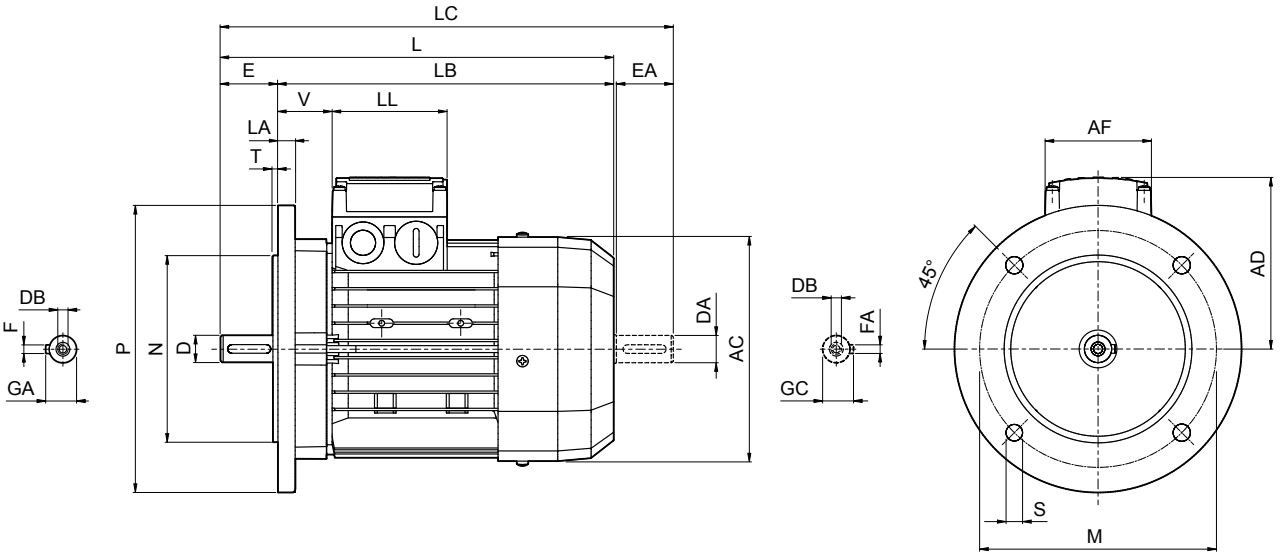

Dimensions are in Inch except when shown in *italic [mm]*

	Shaft					Flange						Motor							
	D DA	**E EA**	**DB**	**GA GC**	**F FA**	**M**	**N**	**P**	**S**	**T**	**LA**	**AC**	**L**	**LB**	**LC**	**AD**	**AF**	**LL**	**V**
BE 63	0.433	0.906	*M4*	0.492	0.157	4.528	3.740	5.512	0.374	0.118	0.394	4.764	8.150	7.244	9.134	3.740	2.913	3.150	1.024
BE 71	0.551	1.181	*M5*	0.630	0.197	5.118	4.331	6.299				5.433	9.803	8.622	11.063	4.252			1.457
BE 80	0.748	1.575	*M6*	0.846	0.236	6.496	5.118	7.874	0.453	0.138	0.453	6.142	10.787	9.213	12.402	4.685			1.496
BE 90 S	0.945	1.969	*M8*	1.063	0.315							6.929	12.835	10.866	14.882	5.236	3.858	3.858	1.732
BE 90 L																			
BE 100	1.102	2.362	*M10*	1.220		8.465	7.087	9.843	0.551		0.551	7.677	14.449	12.087	16.890	5.591			1.969
BE 112											0.591	8.622	15.157	12.795	17.638	6.181			2.047
BE 132 S	1.496	3.150	*M12*	1.614	0.394	10.433	9.055	11.811		0.157	0.787	10.157	19.409	16.260	22.677	7.598	4.646	4.646	2.283
BE 132 MA																			
BE 132 MB													20.787	17.638	24.055				
BE 160 M	1.654 1.496(1)	4.331 3.150(1)	*M16 M12(1)*	1.772 1.614(1)	0.472 0.394(1)	11.811	9.843	13.780	0.728	0.197	0.591	12.205	23.465	19.134	26.772	9.646	7.362	7.362	2.008 2.047
BE 160 L													25.197	20.866	28.504				
BE 180 M	1.890 1.654(1)	4.331 4.331(1)	*M16 M16(1)*	2.028 1.772(1)	0.551 0.472(1)						0.709	13.701	27.874	23.543	32.402	10.276			
BE 180 L																			

N.B.: 1) These values refer to the rear shaft end.

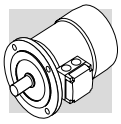

BE - IM B5 - FD

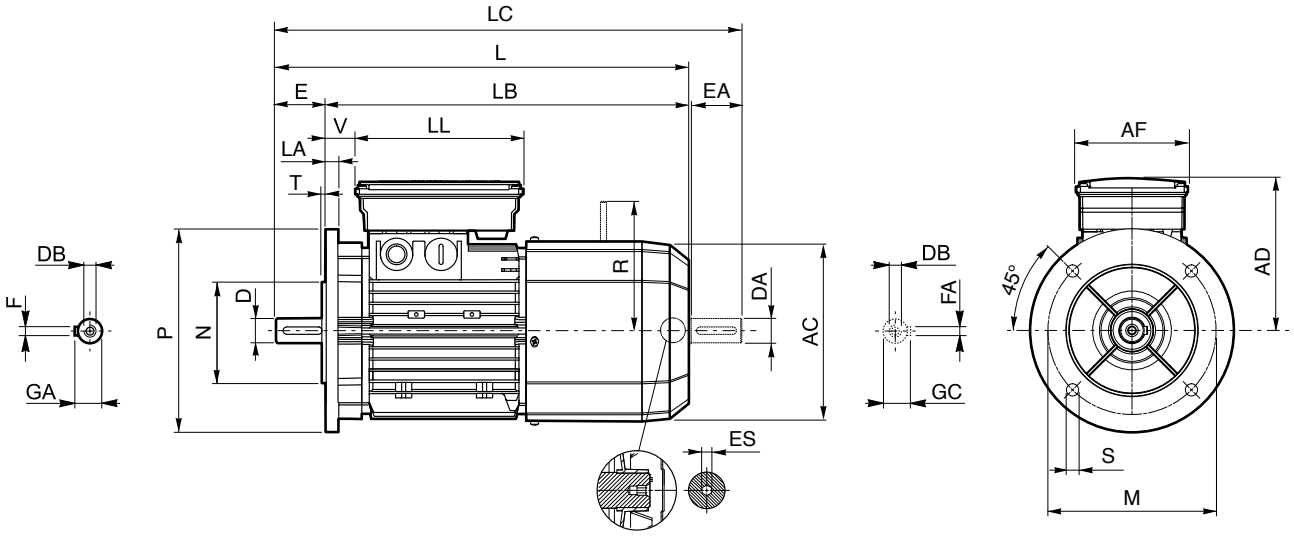

[mm]

	Shaft					Flange						Motor									
	D DA	E EA	DB	GA GC	F FA	M	N	P	S	T	LA	AC	L	LB	LC	AD	AF	LL	V	R FD	ES (2)
BE 63	11	23	M4	12.5	4	115	95	140	9.5	3	10	121	272	249	297	122	98	133	14	96	5
BE 71	14	30	M5	16	5	130	110	160		3.5		138	313	283	345	135			24	103	
BE 80	19	40	M6	21.5	6	165	130	200	11.5		11.5	156	348	308	390	143			25	129	
BE 90 S	24	50	M8	27	8							176	411	361	463	146	110	165	32		6
BE 90 L																				160	
BE 100	28	60	M10	31		215	180	250	14	4	14	195	458	398	521	155			37		
BE 112											15	219	484	424	547	170			39	199	
BE 132 S	38	80	M12	41	10	265	230	300			20	258	603	523	686	210	140	188	46	204	
BE 132 MA																					
BE 132 MB													628	548	711					226	—
BE 160 M	42 38(1)	110 80(1)	M16 M12(1)	45 41(1)	12 10(1)	300	250	350	18.5	5	15	310	736	626	820	245	187	187	51	266	
BE 160 L													780	670	864						
BE 180 M	48 42(1)	110 110(1)	M16 M16(1)	51.5 45(1)	14 12(1)						18	348	866	756	981	261			52	305	
BE 180 L																					

N.B.: 1) These values refer to the rear shaft end (PS). 2) “ES” hexagon is not present with PS option

BE - IM B5 - FD

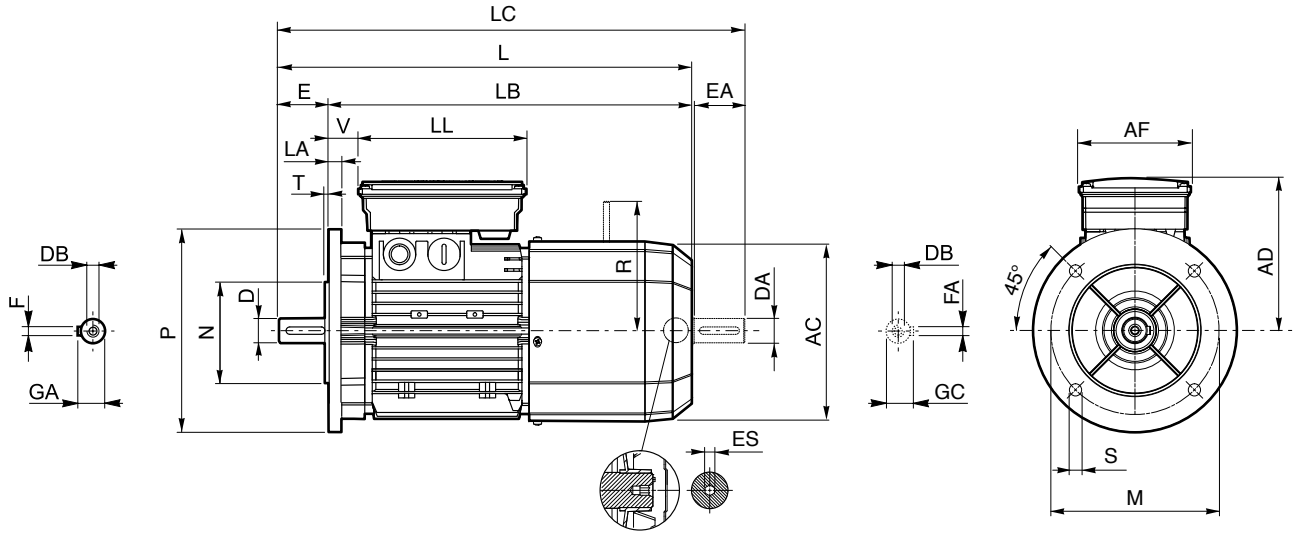

Dimensions are in Inch except when shown in *italic [mm]*

	Shaft					Flange						Motor									
	D **DA**	**E** **EA**	**DB**	**GA** **GC**	**F** **FA**	**M**	**N**	**P**	**S**	**T**	**LA**	**AC**	**L**	**LB**	**LC**	**AD**	**AF**	**LL**	**V**	**R** **FD**	**ES** (2)
BE 63	0.433	0.906	*M4*	0.492	0.157	4.528	3.740	5.512	0.374	0.118	0.394	4.764	10.709	9.803	11.693	4.803	3.858	5.236	0.551	3.780	0.197
BE 71	0.551	1.181	*M5*	0.630	0.197	5.118	4.331	6.299				5.433	12.323	11.142	13.583	5.315			0.945	4.055	
BE 80	0.748	1.575	*M6*	0.846	0.236	6.496	5.118	7.874	0.453	0.138	0.453	6.142	13.701	12.126	15.354	5.630			0.984	5.079	
BE 90 S	0.945	1.969	*M8*	1.063	0.315							6.929	16.181	14.213	18.228	5.748	4.331	6.496	1.260	6.299	0.236
BE 90 L																					
BE 100	1.102	2.362	*M10*	1.220		8.465	7.087	9.843	0.551	0.157	0.551	7.677	18.031	15.669	20.512	6.102			1.457		
BE 112											0.591	8.622	19.055	16.693	21.535	6.693			1.535	7.835	
BE 132 S	1.496	3.150	*M12*	1.614	0.394	10.433	9.055	11.811			0.787	10.157	23.740	20.591	27.008	8.268	5.512	7.402	1.811	8.031	
BE 132 MA																					
BE 132 MB													24.724	21.575	27.992					8.898	—
BE 160 M	1.654 1.496(1)	4.331 3.150(1)	*M16 M12*(1)	1.772 1.614(1)	0.472 0.394(1)	11.811	9.843	13.780	0.728	0.197	0.591	12.205	28.976	24.646	32.283	9.646	7.362	7.362	2.008	10.472	
BE 160 L													30.709	26.378	34.016						
BE 180 M	1.890 1.654(1)	4.331 4.331(1)	*M16 M16*(1)	2.028 1.772(1)	0.551 0.472(1)						0.709	13.701	34.094	29.764	38.622	10.276			2.047	12.008	
BE 180 L																					

N.B.: 1) These values refer to the rear shaft end (PS). 2) “ES” hexagon is not present with PS option

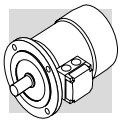

ME

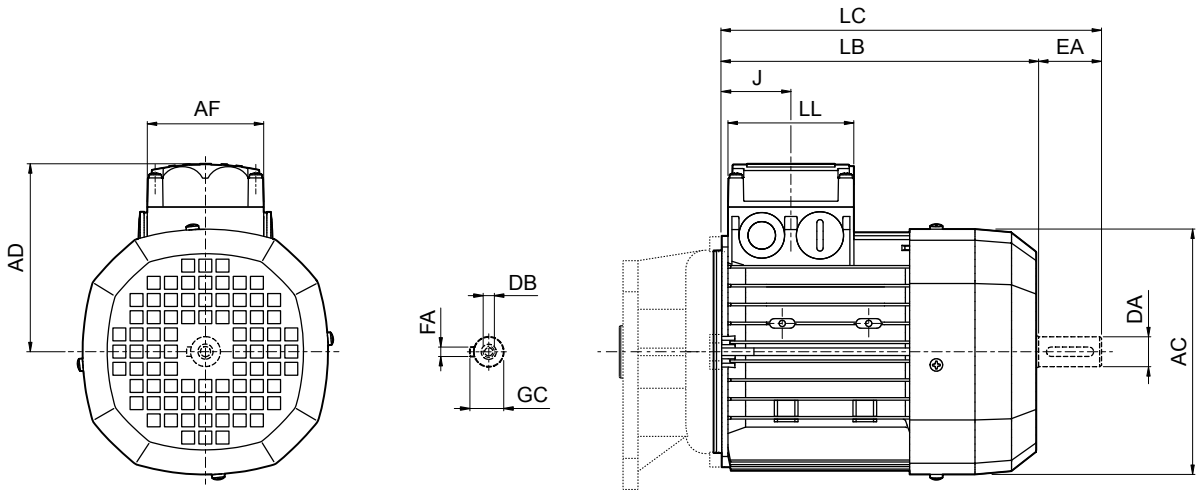

ME-IE2

[mm]

	Rear shaft end					Motor						
	DA	**EA**	**DB**	**FA**	**GC**	**AC**	**LB**	**LC**	**AF**	**LL**	**J**	**AD**
ME 05	11	23	M4	12.5	4	121	165	191	74	80	48	95
ME 1S	14	30	M5	16	5	138	187	219			45	108
ME 2S	19	40	M6	21.5	6	156	202	245			44	119
ME 3S	28	60	M10	31	8	195	230	293	98	98	53.5	142
ME 3L							262	325				
ME 4S	38	80	M12	41	10	258	361	444	118	118	64.5	193
ME 4L												
ME 4LB							396	479				
ME 5S	38	80	M12	41	10	310	418	502	187	187	77	245
ME 5L							462	546				

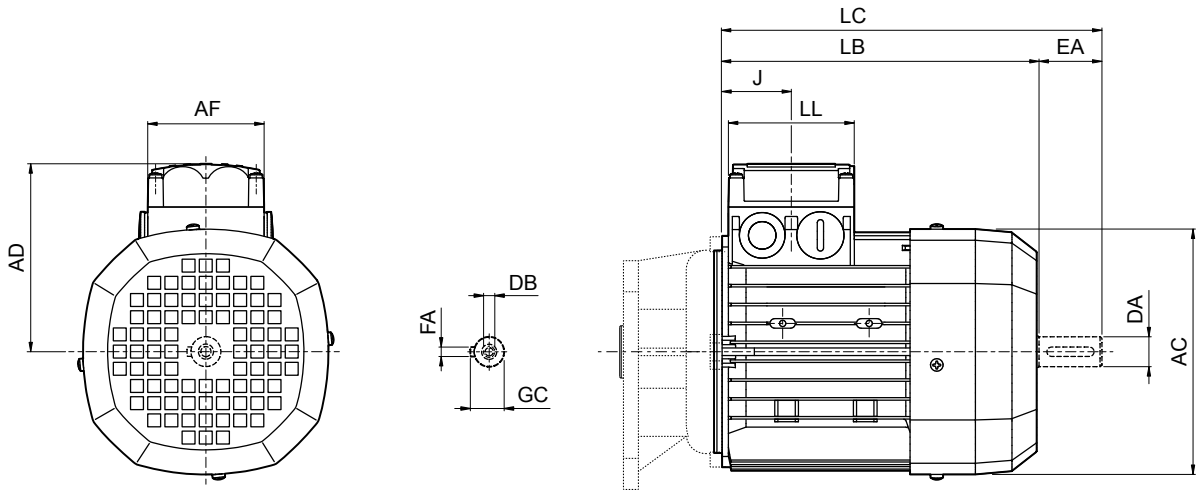

[inch]

Dimensions are in Inch except when shown in *italic [mm]*

	Rear shaft end					Motor						
	DA	**EA**	**DB**	**FA**	**GC**	**AC**	**LB**	**LC**	**AF**	**LL**	**J**	**AD**
ME 05	0.433	0.906	*M4*	0.492	0.157	4.764	6.496	7.520	2.913	3.150	1.890	3.740
ME 1S	0.551	1.181	*M5*	0.630	0.197	5.433	7.362	8.622			1.772	4.252
ME 2S	0.748	1.575	*M6*	0.846	0.236	6.142	7.953	9.646			1.732	4.685
ME 3S	1.102	2.362	*M10*	1.220	0.315	7.677	9.055	11.535	3.858	3.858	2.106	5.591
ME 3L							10.315	12.795				
ME 4S	1.496	3.150	*M12*	1.614	0.394	10.157	14.213	17.480	4.646	4.646	2.539	7.598
ME 4L												
ME 4LB							15.591	18.858				
ME 5S						12.205	16.457	19.764	7.362	7.362	3.031	9.646
ME 5L							18.189	21.496				

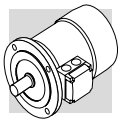

ME - FD

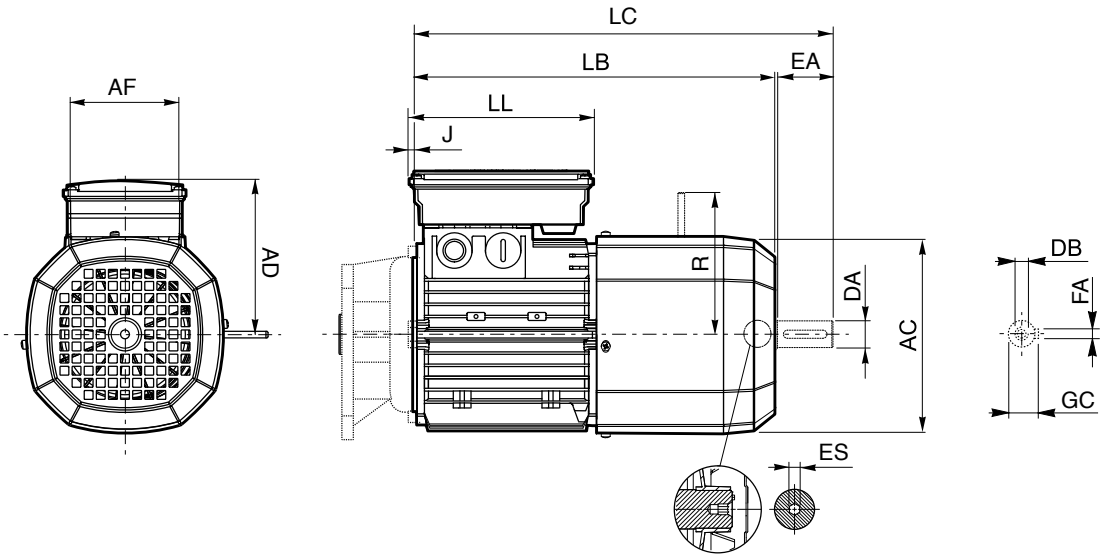

[mm]

	Rear shaft end					Motor									
	DA	**EA**	**DB**	**GC**	**FA**	**AC**	**LB**	**LC**	**AF**	**LL**	**J**	**AD**	**R**		**ES** [1]
ME 05	11	23	M4	12.5	4	121	231	256	98	133	-4.5	119	96	116	5
ME 1S	14	30	M5	16	5	138	248	280			-8	135	103	124	
ME 2S	19	40	M6	21.5	6	156	272	314			-17	143	129	134	
ME 3S	28	60	M10	31	8	195	326	389	110	165	7	155	160	160	6
ME 3L							353	416							
ME 4S	38	80	M12	41	10	258	470	553	140	188	7	210	204	200	
ME 4LA															
ME 4LB							495	578					226	217	
ME 5S	38	80	M12	41	10	310	558	642	187	187	17	245	266	247	---
ME 5L							602	686							

N.B.: 1) “ES” hexagon is not present with PS option

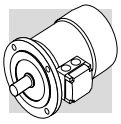

ME - FD

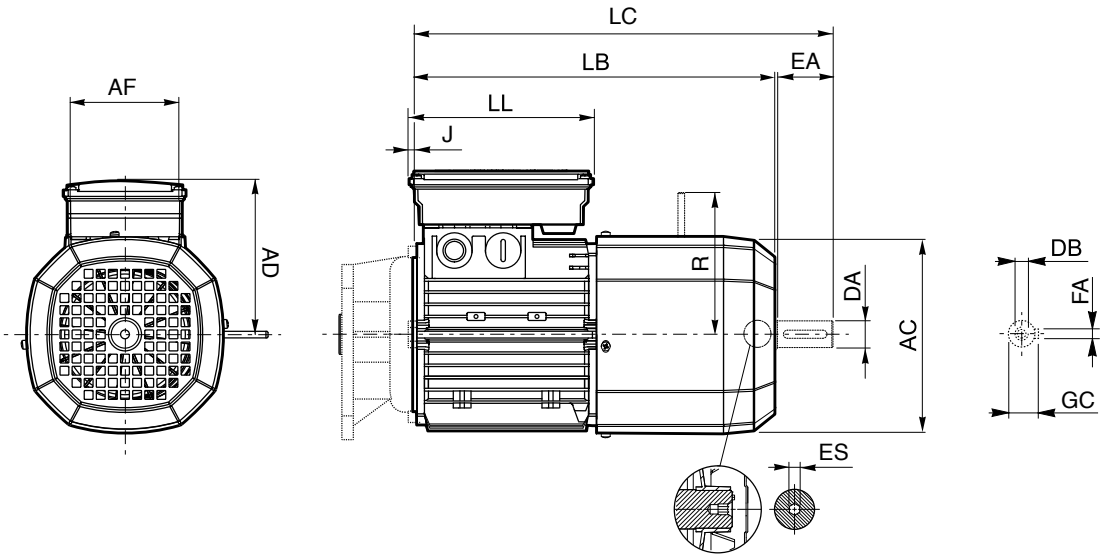

[inch]

Dimensions are in Inch except when shown in *italic [mm]*

	Rear shaft end					Motor								
	DA	**EA**	**DB**	**GC**	**FA**	**AC**	**LB**	**LC**	**AF**	**LL**	**J**	**AD**	**R** FD	**ES** (1)
ME 05	0.433	0.906	*M4*	0.492	0.157	4.764	9.094	10.079	3.858	5.236	-0.177	4.685	3.780	0.197
ME 1S	0.551	1.181	*M5*	0.630	0.197	5.433	9.764	11.024			-0.315	5.315	4.055	
ME 2S	0.748	1.575	*M6*	0.846	0.236	6.142	10.709	12.362			-0.669	5.630	5.079	
ME 3S	1.102	2.362	*M10*	1.220	0.315	7.677	12.835	15.315	4.331	6.496	0.276	6.102	6.299	0.236
ME 3L							13.898	16.378						
ME 4S	1.496	3.150	*M12*	1.614	0.394	10.157	18.504	21.772	5.512	7.402	0.276	8.268	8.031	
ME 4LA														
ME 4LB							19.488	22.756					8.898	
ME 5S	1.496	3.150	*M12*	1.614	0.394	12.205	21.969	25.276	7.362	7.362	0.669	9.646	10.472	—
ME 5L							23.701	27.008						

N.B.: 1) “ES” hexagon is not present with PS option

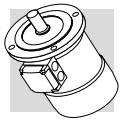

2P	3000 min^{-1} - S1	50 Hz

P_n kW	P_n hp		n min^{-1}	M_n Nm	M_n lb·in	In 400V A	η% 100%	η% 75%	η% 50%	cosφ	$\frac{I_s}{I_n}$	$\frac{M_s}{M_n}$	$\frac{M_a}{M_n}$	KVA code	J_m x 10^{-4} kgm^2	J_m x 10^{-4} lb·ft^2	IM B5 Kg	IM B5 lbs	d.c. brake FD Mod	M_b Nm	M_b lb·in	Z_o 1/h NB	Z_o 1/h SB	J_m x 10^{-4} kgm^2	J_m x 10^{-4} lb·ft^2	IM B5 Kg	IM B5 lbs	Standard CE	cULus variant CE + UL	CCC variant CE + CCC
0.18	0.25	**BN 63A 2**	2730	0.63	5.6	0.56	59.9	56.9	51.9	0.77	3	2.1	2.0	E	2.0	0.0048	3.5	7.7	**FD 02**	1.75	15	3900	4800	2.6	0.0062	5.2	11	•	•	
0.25	0.33	**BN 63B 2**	2740	0.87	7.7	0.72	66	64.8	64.8	0.76	3.3	2.3	2.3	E	2.3	0.0055	3.9	8.6	**FD 02**	1.75	15	3900	4800	3.0	0.0071	5.6	12	•	•	
0.37	0.5	**BN 63C 2**	2800	1.26	11.2	0.99	69.1	66.8	66.8	0.78	3.9	2.6	2.6	F	3.3	0.0078	5.1	11	**FD 02**	3.5	31	3600	4500	3.9	0.0093	6.8	15	•	•	
0.37	0.5	**BN 71A 2**	2820	1.25	11.1	0.95	73.8	73	70.6	0.76	4.8	2.8	2.6	H	3.5	0.0082	5.4	12	**FD 03**	3.5	31	3000	4100	4.6	0.0109	8.1	18	•	•	
0.55	0.75	**BN 71B 2**	2820	1.86	16.5	1.37	76	75.8	74.8	0.76	5	2.9	2.8	H	4.1	0.0097	6.2	14	**FD 03**	5	44	2900	4200	5.3	0.0126	8.9	20	•	•	
0.75	1	**BN 71C 2**	2810	2.6	23	1.86	76.6	76.2	76.2	0.76	5.1	3.1	2.8	H	5.0	0.0119	7.3	16	**FD 03**	5	44	1900	3300	6.1	0.0145	10	22	•	•	
0.75	1	**BN 80A 2**	2810	2.6	23	1.75	76.2	75.5	68.3	0.81	4.8	2.6	2.2	G	7.8	0.0185	8.6	19	**FD 04**	5	44	1700	3200	9.4	0.0223	12.5	28	•	•	
1.1	1.5	**BN 80B 2**	2800	3.8	33.6	2.57	76.4	76.2	75	0.81	4.8	2.8	2.4	G	9.0	0.0214	9.5	21	**FD 04**	10	89	1500	3000	10.6	0.0252	13.4	30	•	•	
1.5	2	**BN 80C 2**	2800	5.1	45	3.4	79.1	79.5	77.2	0.81	4.9	2.7	2.4	G	11.4	0.0271	11.3	25	**FD 04**	15	133	1300	2600	13.0	0.0308	15.2	34	•	•	
1.5	2	**BN 90SA 2**	2870	5	44	3.4		81.5	78.1	0.8	5.9	2.7	2.6	H	12.5	0.0297	12.3	27	**FD 14**	15	133	900	2200	14.1	0.0335	16.5	36	•	•	
1.85	2.5	**BN 90SB 2**	2880	6.1	54	4	82.5	82	75.4	0.8	6.2	2.9	2.6	H	16.7	0.0397	14	31	**FD 14**	15	133	900	2200	18.3	0.0434	18.2	40	•	•	
2.2	3	**BN 90L 2**	2880	7.3	65	4.8	82.7	82.1	80.8	0.8	6.3	2.9	2.7	J	16.7	0.0397	14	31	**FD 05**	26	230	900	2200	21	0.0498	20	44	•	•	
3	4	**BN 100L 2**	2860	10	89	6.7	81.5	81.3	77.4	0.79	5.6	2.6	2.2	H	31	0.0736	20	44	**FD 15**	26	230	700	1600	35	0.0831	26	57	•	•	
4	5.5	**BN 100LB 2**	2870	13.3	118	8.7	83.1	83	77.8	0.8	5.8	2.7	2.5	H	39	0.0926	23	51	**FD 15**	40	354	450	900	43	0.102	29	64	•	•	
4	5.5	**BN 112M 2**	2900	13.2	117	8.2	85.5	84.5	83	0.82	6.9	3	2.9	J	57	0.135	28	62	**FD 06S**	40	354	—	950	66	0.157	39	86	•	•	
5.5	7.5	**BN 132SA 2**	2890	18.2	161	11.2	84.7	84.5	81.2	0.84	5.9	2.6	2.2	G	101	0.240	35	77	**FD 06**	50	443	—	600	112	0.266	48	106	•	•	
7.5	10	**BN 132SB 2**	2900	25	221	14.7	86.5	86.3	84.4	0.85	6.4	2.6	2.2	H	134	0.318	42	93	**FD 06**	50	443	—	550	145	0.344	55	121	•	•	
9.2	12.5	**BN 132M 2**	2930	30	266	17.7	87	86.5	83.6	0.86	6.7	2.8	2.3	H	178	0.422	53	117	**FD 56**	75	664	—	430	189	0.449	66	146	•	•	
11	15	**BN 160MR 2**	2920	36	319	20.6	87.6	87	86	0.88	6.9	2.9	2.5	H	210	0.499	65	143										•	•	
15	20	**BN 160MB 2**	2930	49	434	28.1	89.6	89.4	88	0.86	7.1	2.6	2.3	H	340	0.808	84	185										•	•	
18.5	25	**BN 160L 2**	2930	60	531	34	90.4	90.1	89	0.86	7.6	2.7	2.3	J	420	0.998	97	214										•	•	
22	30	**BN 180M 2**	2930	72	637	40	89.9	89.7	89.5	0.88	7.8	2.6	2.4	J	490	1.164	109	240										•	•	
30	40	**BN 200LA 2**	2930	98	867	54	90.7	90.1	87.6	0.89	7.8	2.7	2.9	J	770		140	309										•	•	

4P	1500 min^{-1} - S1	50 Hz

																			d.c. brake FD									Standard	CUS variant	CCC variant
P_n			n	M_n		In 400V	η%			cosφ	$\frac{I_s}{I_n}$	$\frac{M_s}{M_n}$	$\frac{M_a}{M_n}$	KVA code	J_m x 10^{-4}		IM B5		Mod	M_b		Z_o 1/h		J_m x 10^{-4}		IM B5		CE	CE + UL	CE + CCC
kW	hp		min^{-1}	Nm	lb·in	A	100%	75%	50%						kgm^2	lb·ft^2	Kg	lbs		Nm	lb·in	NB	SB	kgm^2	lb·ft^2	Kg	lbs			
0.06	0.08	**BN 56A**	**4**	1340	0.43	3.8	0.28	46.8	44.2	41.3	0.65	2.6	2.3	2	H	1.5	0.0036	3.1	6.8										•	•	•
0.09	0.12	**BN 56B**	**4**	1350	0.64	5.7	0.42	51.7	47.6	42.9	0.60	2.6	2.5	2.4	H	1.5	0.0036	3.1	6.8										•	•	•
0.12	0.16	**BN 63A**	**4**	1350	0.85	7.5	0.47	59.8	56.2	47	0.62	2.6	1.9	1.8	F	2	0.0047	3.5	7.7	**FD 02**	1.75	15	10000	13000	2.6	0.0062	5.2	11	•	•	
0.18	0.25	**BN 63B**	**4**	1320	1.3	11.5	0.71	54.8	52.9	52.5	0.67	2.6	2.2	2	F	2.3	0.0055	3.9	8.6	**FD 02**	3.5	31	10000	13000	3	0.0071	5.6	12	•	•	
0.25	0.33	**BN 63C**	**4**	1340	1.78	15.8	0.8	65.3	65	57.9	0.69	2.7	2.1	1.9	E	3.3	0.0078	5.1	11	**FD 02**	3.5	31	7800	10000	3.9	0.0093	6.8	15	•	•	
0.25	0.33	**BN 71A**	**4**	1380	1.73	15.3	0.78	63.7	62.2	59.1	0.73	3.3	1.9	1.7	F	5.8	0.0138	5.1	11	**FD 03**	3.5	31	7700	11000	6.9	0.0164	7.8	17	•	•	
0.37	0.5	**BN 71B**	**4**	1370	2.6	23	1.05	66.8	66.7	63	0.76	3.7	2	1.9	F	6.9	0.0164	5.9	13	**FD 03**	5	44	6000	9400	8	0.0190	8.6	19	•	•	
0.55	0.75	**BN 71C**	**4**	1380	3.8	33.6	1.55	69	68.9	68.8	0.74	4.1	2.3	2.3	G	9.1	0.0216	7.3	16	**FD 53**	7.5	66	4300	8700	10.2	0.0242	10	22	•	•	
0.55	0.75	**BN 80A**	**4**	1390	3.8	33.6	1.43	72	71.3	69.7	0.77	4.1	2.3	2	F	15	0.0356	8.2	18	**FD 04**	10	89	4100	8000	16.6	0.0394	12.1	27	•	•	
0.75	1	**BN 80B**	**4**	1400	5.1	45	1.85	75	74.5	69.3	0.78	4.9	2.7	2.5	H	20	0.0475	9.9	22	**FD 04**	15	133	4100	7800	22	0.0522	13.8	30	•	•	
1.1	1.5	**BN 80C**	**4**	1400	7.5	66	2.7	75.5	76.2	70.4	0.78	5.1	2.8	2.5	H	25	0.0593	11.3	25	**FD 04**	15	133	2600	5300	27	0.0641	15.2	34	•	•	
1.1	1.5	**BN 90S**	**4**	1390	7.6	67	2.7	76.5	76.2	72.2	0.77	4.6	2.6	2.2	G	21	0.0498	12.2	27	**FD 14**	15	133	4800	8000	23	0.0546	16.4	36	•	•	
1.5	2	**BN 90LA**	**4**	1410	10.2	90	3.6	78.7	78.5	74.9	0.77	5.3	2.8	2.4	H	28	0.0664	13.6	30	**FD 05**	26	230	3400	6000	32	0.0759	19.6	43	•	•	
1.85	2.5	**BN 90LB**	**4**	1390	12.7	112	4.3	78.6	78.9	77.2	0.79	5.1	2.8	2.6	G	30	0.0712	15.1	33	**FD 05**	26	230	3200	5900	34	0.0807	21	47	•	•	
2.2	3	**BN 100LA**	**4**	1410	14.9	132	5.2	81.1	81.4	79.9	0.75	4.5	2.2	2	F	40	0.0949	18	40	**FD 15**	40	354	2600	4700	44	0.1044	25	55	•	•	
3	4	**BN 100LB**	**4**	1410	20	177	6.8	82.6	83.8	83.7	0.77	5	2.3	2.2	G	54	0.1281	22	49	**FD 15**	40	354	2400	4400	58	0.1376	28	62	•	•	
4	5.5	**BN 100LC**	**4**	1400	27.3	241.5	9	82.7	83.1	80.5	0.78	4.7	2.3	2.2	F	61	0.1448	24	53	**FD 55**	55	487	—	1300	65	0.1542	30	66	•	•	
4	5.5	**BN 112M**	**4**	1430	27	239	8.4	84.4	84.2	81.6	0.81	5.6	2.7	2.5	G	98	0.2326	30	66	**FD 06S**	60	531	—	1400	107	0.2539	40	88	•	•	
5.5	7.5	**BN 132S**	**4**	1440	36	319	11.6	84.7	84.8	82.5	0.81	5.5	2.3	2.2	G	213	0.5055	44	97	**FD 56**	75	664	—	1050	223	0.5292	57	126	•	•	
7.5	10	**BN 132MA**	**4**	1440	50	443	15.5	86	86.3	85.3	0.81	5.7	2.5	2.4	H	270	0.6407	53	117	**FD 06**	100	885	—	950	280	0.6645	66	146	•	•	
9.2	12.5	**BN 132MB**	**4**	1440	61	540	18.8	88.4	88.6	87.5	0.81	5.9	2.7	2.5	H	319	0.7570	59	130	**FD 07**	150	1328	—	900	342	0.8116	75	165	•	•	
11	15	**BN 160MR**	**4**	1440	73	646	22.4	87.6	87.8	86	0.81	6	2.7	2.5	G	360	0.8543	70	154	**FD 07**	150	1328	—	850	382	0.9065	86	190	•	•	
11	15	**BN 160M**	**4**	1450	72.4	641.2	22.5	88	88.5	87.5	0.81	6.1	2.5	2.3	G	479	1.137	73	161	**FD 07**	150	1328	—	800	501	1.188	89	196	•	•	
15	20	**BN 160L**	**4**	1460	98	867	30	88.7	88.5	88.4	0.81	6	2.3	2.1	G	650	1.542	99	218	**FD 08**	200	1770	—	750	725	1.720	129	284	•	•	
18.5	25	**BN 180M**	**4**	1460	121	1071	37	89.3	89.5	89.2	0.81	6.2	2.6	2.5	H	790	1.875	115	254	**FD 08**	250	2213	—	700	865	2.053	145	320	•	•	
22	30	**BN 180L**	**4**	1460	144	1275	44	89.9	90	90	0.80	6.4	2.5	2.5	G	1250	2.966	135	298	**FD 09**	300	2655	—	400	1450	3.441	175	386	•	•	
30	40	**BN 200L**	**4**	1460	196	1735	59	91.4	91.7	91	0.80	7.1	2.7	2.8	J	1650	3.916	157	346	**FD 09**	400	3540	—	300	1850	4.390	197	434	•	•	

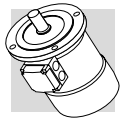

BN-IE1

6P	1000 min^{-1} - S1	50 Hz

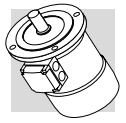

P_n kW	P_n hp		n min^{-1}	M_n Nm	M_n lb·in	In 400V A	η% 100%	η% 75%	η% 50%	cosφ	I_s/I_n	M_s/M_n	M_a/M_n	KVA code	J_m x 10^{-4} kgm^2	J_m x 10^{-4} lb·ft^2	IM B5 Kg	IM B5 lbs	Mod	M_b Nm	M_b lb·in	Z_o 1/h NB	Z_o 1/h SB	J_m x 10^{-4} kgm^2	J_m x 10^{-4} lb·ft^2	IM B5 Kg	IM B5 lbs	Standard CE	CUS variant CE + UL	CCC variant CE + CCC
																				d.c. brake FD											
0.09	0.12	**BN 63A 6**	880	0.98	8.7	0.6	41	41	32.9	0.53	2.1	2.1	1.8	J	3.4	0.0081	4.6	10	**FD 02**	3.5	31	9000	14000	4	0.0095	6.3	14	•	•	•
0.12	0.16	**BN 63B 6**	870	1.32	11.7	0.64	45	44	41.8	0.6	2.1	1.9	1.7	G	3.7	0.0088	4.9	11	**FD 02**	3.5	31	9000	14000	4.3	0.0102	6.6	15	•	•	
0.18	0.25	**BN 71A 6**	900	1.91	16.9	0.68	55	55.5	51	0.69	2.6	1.9	1.7	F	8.4	0.0199	5.5	12	**FD 03**	5	44	8100	13500	9.5	0.0225	8.2	18	•	•	
0.25	0.33	**BN 71B 6**	900	2.7	23.9	0.82	62	58.5	51.4	0.71	2.6	1.9	1.7	D	10.9	0.0259	6.7	15	**FD 03**	5	44	7800	13000	12	0.0285	9.4	21	•	•	
0.37	0.5	**BN 71C 6**	910	3.9	34.5	1.17	66	60	53.3	0.69	3	2.4	2	E	12.9	0.0306	7.7	17	**FD 53**	7.5	66	5100	9500	14	0.0332	10.4	23	•	•	
0.37	0.5	**BN 80A 6**	910	3.9	34.5	1.15	68	67.4	63.3	0.68	3.2	2.2	2	F	21	0.0498	9.9	22	**FD 04**	10	89	5200	8500	23	0.0546	13.8	30	•	•	
0.55	0.75	**BN 80B 6**	920	5.7	50	1.67	70	69.8	64.3	0.68	3.9	2.6	2.2	G	25	0.0593	11.3	25	**FD 04**	15	133	4800	7200	27	0.0641	15.2	34	•	•	
0.75	1	**BN 80C 6**	920	7.8	69	2.38	70	70	64.4	0.65	3.8	2.5	2.2	G	28	0.0664	12.2	27	**FD 04**	15	133	3400	6400	30	0.0712	16.1	35	•	•	
0.75	1	**BN 90S 6**	920	7.8	69	2.27	70	69	64.2	0.68	3.8	2.4	2.2	G	26	0.0617	12.6	28	**FD 14**	15	133	3400	6500	28	0.0664	16.8	37	•	•	
1.1	1.5	**BN 90L 6**	920	11.4	101	3.2	72.9	72.6	69.1	0.69	3.9	2.3	2	G	33	0.0783	15	33	**FD 05**	26	230	2700	5000	37	0.0878	21	46	•	•	
1.5	2	**BN 100LA 6**	940	15.2	135	4	75.2	74.2	70.3	0.72	4.1	2.1	2	G	82	0.1946	22	49	**FD 15**	40	354	1900	4100	86	0.2041	28	62	•	•	
1.85	2.5	**BN 100LB 6**	930	19	168	4.8	76.6	72.8	62.6	0.73	4.6	2.1	2	G	95	0.2254	24	53	**FD 15**	40	354	1700	3600	99	0.2349	30	66	•	•	
2.2	3	**BN 112M 6**	940	22	195	5.5	78.5	79	76.5	0.73	4.8	2.2	2	H	168	0.3987	32	71	**FD 06S**	60	531	—	2100	177	0.4200	42	93	•	•	
3	4	**BN 132S 6**	940	30	266	7.1	79.7	77	75.1	0.76	5.1	1.9	1.8	G	216	0.5126	36	79	**FD 56**	75	664	—	1400	226	0.5363	49	108	•	•	
4	5.5	**BN 132MA 6**	950	40	354	9.2	81.4	81.5	79.5	0.77	5.5	2	1.8	H	295	0.7000	45	99	**FD 06**	100	885	—	1200	305	0.7238	58	128	•	•	
5.5	7.5	**BN 132MB 6**	945	56	496	12.2	83.1	80.9	79.1	0.78	6.1	2.1	1.9	H	383	0.9089	56	123	**FD 07**	150	1328	—	1050	406	0.9635	72	159	•	•	
7.5	10	**BN 160M 6**	955	75	664	15.7	85	85	84.8	0.81	5.9	2.2	2	H	740	1.7560	83	183	**FD 08**	170	1505	—	900	815	1.9340	112	247	•	•	
11	15	**BN 160L 6**	960	109	965	22.7	86.4	86.5	85.9	0.81	6.6	2.5	2.3	H	970	2.3018	103	227	**FD 08**	200	1770	—	800	1045	2.4798	133	293	•	•	
15	20	**BN 180L 6**	970	148	1310	30	87.7	88	87.3	0.82	6.2	2	2.4	H	1550	3.6782	130	287	**FD 09**	300	2655	—	600	1750	4.1528	170	375	•	•	
18.5	25	**BN 200LA 6**	960	184	1629	37	88.6	88	87.3	0.81	5.9	2	2.3	G	1700	4.0342	145	320	**FD 09**	400	3540	—	450	1900	4.5088	185	408	•	•	

2P	3600 min^{-1} - S1	60 Hz

P_n kW	P_n hp		n min^{-1}	M_n Nm	M_n lb·in	In 460V A	η% 100%	cosφ	$\frac{I_s}{I_n}$	$\frac{M_s}{M_n}$	$\frac{M_a}{M_n}$	KVA code	J_m x 10^{-4} kgm^2	J_m x 10^{-4} lb·ft^2	IM B5 Kg	IM B5 lbs	d.c. brake FD Mod	M_b Nm	M_b lb·in	Z_o 1/h NB	Z_o 1/h SB	J_m x 10^{-4} kgm^2	J_m x 10^{-4} lb·ft^2	IM B5 Kg	IM B5 lbs	Standard CE	CUS variant CE + UL
0.18	0.25	**BN 63A 2**	3360	0.53	4.7	0.55	58	0.74	3.7	2.9	2.4	H	2.0	0.0048	3.5	7.7	**FD 02**	1.75	15	2700	3300	2.6	0.0062	5.2	11	•	•
0.25	0.33	**BN 63B 2**	3370	0.70	6.2	0.69	61	0.73	4.2	2.9	2.9	H	2.3	0.0055	3.9	8.6	**FD 02**	1.75	15	2700	3300	3.0	0.0071	5.6	12	•	•
0.37	0.5	**BN 63C 2**	3430	1.03	9.1	0.88	70	0.75	5.5	3.3	3.2	J	3.3	0.0078	5.1	11	**FD 02**	3.50	30	2500	3000	3.9	0.0093	6.8	15	•	•
0.37	0.5	**BN 71A 2**	3420	1.04	9.2	0.86	71	0.77	5.8	3.3	3.1	J	3.5	0.0082	5.4	12	**FD 03**	3.50	30	2400	3200	4.6	0.0109	8.1	18	•	•
0.55	0.75	**BN 71B 2**	3450	1.55	13.7	1.23	76	0.75	6.2	3.4	3.4	K	4.1	0.0097	6.2	14	**FD 03**	5	44	2200	2700	5.3	0.0126	8.9	20	•	•
0.75	1	**BN 71C 2**	3440	2.08	18.4	1.62	77	0.75	6.2	3.8	3.5	K	5.0	0.0119	7.3	16	**FD 03**	5	44	1500	2100	6.1	0.0145	10	22	•	•
0.75	1	**BN 80A 2**	3440	2.1	18.3	1.62	76	0.76	5.9	3.1	2.8	J	7.8	0.0185	8.6	19	**FD 04**	5	44	1400	1700	9.4	0.0223	12.5	28	•	•
1.1	1.5	**BN 80B 2**	3430	3.1	27.6	2.4	77	0.76	6.2	3.8	2.9	J	9.0	0.0214	9.5	21	**FD 04**	10	88	1200	1600	10.6	0.0252	13.4	30	•	•
1.5	2	**BN 80C 2**	3415	4.2	37.2	2.9	81	0.79	6.8	3	2.9	J	11.4	0.0271	11.3	25	**FD 04**	15	133	1000	1300	13.0	0.0308	15.2	34	•	•
1.5	2	**BN 90SA 2**	3480	4.1	36.2	3.04	79	0.78	7.3	3.6	3.2	K	12.5	0.0297	12.2	27	**FD 14**	15	133	750	1000	14.1	0.0335	16.5	36	•	•
1.85	2.5	**BN 90SB 2**	3500	5.0	44.3	3.63	80	0.79	8.5	4.2	3.8	L	16.7	0.0397	14.1	31	**FD 14**	15	133	750	1000	18.3	0.0434	18.2	40	•	•
2.2	3	**BN 90L 2**	3490	6.1	54	4.4	81	0.79	7.3	3.8	3.3	K	16.7	0.0397	14.1	31	**FD 05**	26	230	750	1000	21.0	0.0498	20	44	•	•
3	4	**BN 100L 2**	3470	8.3	73.5	5.9	79	0.81	7.6	3.7	4	L	31.0	0.0736	20	44	**FD 15**	40	354	452	611	35.0	0.0831	26	57	•	•
3.7	5	**BN 100LB 2**	3490	10.2	90	6.7	84	0.83	6.7	2.9	3.3	J	39.0	0.0926	23	51	**FD 15**	40	354	360	500	43.0	0.102	29	64		•
4	5.4	**BN 100LB 2**	3460	11.0	97.4	7.4	83	0.82	7.9	4	3.6	K	39.0	0.0926	23	51	**FD 15**	40	354	360	500	43.0	0.102	29	64	•	
3.7	5	**BN 112M 2**	3540	10.0	88.5	6.7	86.6	0.80	10.4	4.1	4	M	57.0	0.135	28	62	**FD 06S**	40	354	280	450	66.0	0.157	39	86		•
4	5.4	**BN 112M 2**	3530	10.8	95.6	7.2	85.7	0.83	9.7	3.8	3.7	M	57.0	0.135	28	62	**FD 06S**	40	354	280	450	66.0	0.157	39	86	•	
5.5	7.5	**BN 132SA 2**	3490	15.3	135	9.8	83	0.86	6.4	2.7	2.6	H	101.0	0.240	35	77	**FD 06**	50	440	—	400	112	0.266	48	106	•	•
7.5	10	**BN 132SB 2**	3490	20.5	181	13	82	0.88	6.2	2.8	2.7	H	134.0	0.318	42	93	**FD 06**	50	440	—	350	145	0.344	55	121	•	•
9.2	11	**BN 132M 2**	3530	24.9	220.4	15.5	87	0.86	7.7	3	2.9	K	178.0	0.422	53	117	**FD 56**	75	664	—	280	189	0.449	66	146	•	•
11	15	**BN 160MR 2**	3510	30.6	271	18.3	87	0.88	6.9	2.7	2.9	H	210.0	0.499	65	143										•	•
15	20	**BN 160MB 2**	3510	40.6	359	24.2	86	0.9	6	2.5	2.8	G	340.0	0.808	84	185										•	•
18.5	25	**BN 160L 2**	3520	50.7	449	29.2	88	0.91	6.9	2.8	2.7	H	420.0	0.998	97	214										•	•
22	30	**BN 180M 2**	3520	60.7	537	35.1	88	0.91	6.9	2.8	2.8	H	490.0	1.164	109	240										•	•
30	40	**BN 200LA 2**	3530	80.9	716	46.2	89	0.91	6.9	2.6	3.5	H	770.0	1.829	140	309										•	•

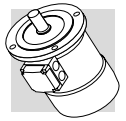

4P	1800 min^{-1} - S1	60 Hz

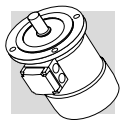

																	d.c. brake									Standard	CUS variant
																	FD										
P_n			n	M_n		In 460V	η%	cosφ	$\frac{I_s}{I_n}$	$\frac{M_s}{M_n}$	$\frac{M_a}{M_n}$	KVA code	J_m x 10^{-4}		IM B5		Mod	M_b		Z_o 1/h		J_m x 10^{-4}		IM B5		CE	CE + UL
kW	hp		min^{-1}	Nm	lb·in	A	100%						kgm^2	lb·ft^2	Kg	lbs		Nm	lb·in	NB	SB	kgm^2	lb·ft^2	Kg	lbs		
0.06	0.08	**BN 56A 4**	1670	0.34	3	0.26	53	0.55	2.9	3.1	2.5	J	1.5	0.0036	3.1	6.8										•	•
0.09	0.12	**BN 56B 4**	1670	0.51	4.5	0.37	59	0.52	2.8	2.9	3	H	1.5	0.0036	3.1	6.8										•	•
0.12	0.16	**BN 63A 4**	1650	0.69	6.1	0.43	55	0.64	3.1	2.4	2.2	H	2.0	0.0048	3.5	7.7	**FD 02**	1.75	15	7000	9000	2.6	0.0062	5.2	11	•	•
0.18	0.25	**BN 63B 4**	1670	1.06	9.4	0.68	58	0.59	3.1	2.8	2.4	H	2.3	0.0055	3.9	8.6	**FD 02**	3.5	30	7000	9000	3.0	0.0071	5.6	12	•	•
0.25	0.33	**BN 63C 4**	1640	1.5	13.3	0.77	64	0.65	3.3	2.5	2.4	G	3.3	0.0078	5.1	11.2	**FD 02**	3.5	30	6000	8000	3.9	0.0093	6.8	15	•	•
0.25	0.33	**BN 71A 4**	1700	1.38	12.2	0.65	64	0.74	4.3	2.6	2.1	H	5.8	0.0138	5.1	11	**FD 03**	3.5	30	6000	8500	6.9	0.0164	7.8	18	•	•
0.37	0.5	**BN 71B 4**	1700	2.1	18.5	0.97	66	0.73	4.5	2.6	2.4	H	6.9	0.0164	5.9	13	**FD 03**	5	44	4800	7500	8.0	0.019	8.6	19	•	•
0.55	0.75	**BN 71C 4**	1710	3.1	27.4	1.37	72	0.70	4.9	3	2.8	J	9.1	0.0216	7.3	16	**FD 53**	7.5	66	3400	7000	10.2	0.0242	10	22	•	•
0.55	0.75	**BN 80A 4**	1710	3.1	27.6	1.28	73	0.75	4.9	3	2.4	H	15.0	0.0356	8.2	18.1	**FD 04**	10	89	3400	7000	16.6	0.0394	12.2	27	•	•
0.75	1	**BN 80B 4**	1720	4.1	36.6	1.6	78	0.75	6.2	3.4	3.1	J	20.0	0.0482	10	22	**FD 04**	15	133	3000	6000	22.0	0.0523	13.6	30	•	•
1.1	1.5	**BN 80C 4**	1720	6.1	54.0	2.35	78	0.76	6.5	3.4	3	J	25.0	0.0593	11.3	25	**FD 04**	15	133	2000	4200	27.0	0.0641	15.2	34	•	•
1.1	1.5	**BN 90S 4**	1720	6.2	55	2.43	78	0.74	5.7	3.1	2.7	J	21.0	0.0499	12.2	27	**FD 14**	15	133	3000	7000	23.0	0.0546	16.3	36	•	•
1.5	2	**BN 90LA 4**	1720	8.2	73	3.12	81	0.74	6.6	3.3	3	K	28.0	0.0665	13.6	30	**FD 05**	26	230	2200	4700	32.0	0.0760	19.5	43	•	•
1.85	2.5	**BN 90LB 4**	1720	10.3	91.2	3.8	80	0.76	6.4	3.7	3.2	J	30.0	0.0712	15.1	33	**FD05**	26	230	1800	3800	34.0	0.0807	21.1	47	•	•
2.2	3	**BN 100LA 4**	1720	12.4	110	4.8	81	0.73	5.5	2.7	2.4	H	40.0	0.096	18	40	**FD 15**	40	354	1000	2700	44.0	0.105	25	55	•	•
3	4	**BN 100LB 4**	1720	16.7	147.8	6.2	82.6	0.74	5.6	2.3	2.2	H	54.0	0.128	22	49	**FD 15**	40	354	600	2300	58.0	0.138	28	62	•	•
3.7	5	**BN 100LC 4**	1730	20.6	182	7.5	84	0.74	5.6	2.8	2.9	K	61.0	0.145	25	55	**FD 55**	55	480	—	1200	65.0	0.154	30	66		•
4	5.4	**BN 100LC 4**	1710	22.3	197.4	7.9	84	0.76	5.3	2.6	2.7	H	61.0	0.145	25	55	**FD 55**	55	480	—	1200	65.0	0.154	30	66	•	
3.7	5	**BN 112M 4**	1740	20.3	179.7	7.3	83.5	0.76	7.7	3.5	3.3	K	98.0	0.233	30	66	**FD 06S**	55	480	—	850	107.0	0.254	40	88		•
4	5.5	**BN 112M 4**	1730	22.6	200	8	85	0.76	7	3.1	3	K	98.0	0.233	30	66	**FD 06S**	60	530	—	850	107.0	0.254	40	88	•	
5.5	7.5	**BN 132S 4**	1730	30.8	273	10	84	0.84	6.3	2.9	2.6	H	213.0	0.506	44	97	**FD 56**	75	664	—	850	223.0	0.53	57	126	•	•
7.5	10	**BN 132MA 4**	1740	40.9	362	13.1	85	0.84	6.1	2.9	2.9	H	270.0	0.641	53	117	**FD 06**	100	885	—	700	280.0	0.665	66	146	•	•
9.2	12.5	**BN 132MB 4**	1750	50.2	444.3	16.5	87	0.81	6.8	2.7	2.5	H	319.0	0.757	59	130	**FD 07**	150	1328	—	728	342.0	0.812	75	165	•	•
11	15	**BN 160MR 4**	1740	61.4	543	19.4	88	0.81	6.5	3.1	3	H	360.0	0.855	70	154	**FD 07**	150	1328	—	600	382.0	0.907	86	190	•	•
11	15	**BN 160M 4**	1760	59.7	528.1	18.9	89	0.82	6.1	2.5	2.7	G	479.0	1.367	73	161	**FD 08**	150	1328	—	434	501.0	1.188	89	196	•	•
15	20	**BN 160L 4**	1750	81.3	720	24.8	90	0.84	5.8	2.3	2.5	G	650.0	1.544	99	218	**FD 08**	200	1770	—	400	725.0	1.720	129	284	•	•
18.5	25	**BN 180M 4**	1760	101.1	895	31.3	90	0.83	5.8	2.5	3	G	790.0	1.876	115	254	**FD 08**	250	2210	—	300	865.0	2.054	145	320	•	•
22	30	**BN 180L 4**	1760	119.4	1056.8	39	91	0.79	5.8	2.2	2.7	K	1250.0	2.966	135	298	**FD 09**	300	2655	—	103	1450.0	3.441	175	386	•	•
30	40	**BN 200L 4**	1760	162.8	1440.9	52	91	0.80	6.5	2.7	2.8	H	1650.0	3.916	157	346	**FD 09**	400	3540	—	74	1850.0	4.390	197	434	•	•

6P	1200 min^{-1} - S1	60 Hz

																	d.c. brake FD									Standard	CUS variant
P_n			n	M_n		In 460V	η%	cosφ	$\frac{I_s}{I_n}$	$\frac{M_s}{M_n}$	$\frac{M_a}{M_n}$	KVA code	J_m x 10^{-4}		IM B5		Mod	M_b		Z_o 1/h		J_m x 10^{-4}		IM B5		CE	CE + UL
kW	hp		min^{-1}	Nm	lb·in	A	100%						kgm^2	lb·ft^2	Kg	lbs		Nm	lb·in	NB	SB	kgm^2	lb·ft^2	Kg	lbs		
0.09	0.12	**BN 63A 6**	1100	0.78	6.9	0.48	47	0.5	2.8	2.9	2.9	K	3.4	0.0081	4.6	10.1	**FD 02**	3.5	30	7000	10000	4.0	0.0095	6.3	14	•	•
0.12	0.16	**BN 63B 6**	1100	1.04	9.2	0.55	50	0.55	2.4	2.4	2.7	H	3.7	0.0088	4.9	10.8	**FD 02**	3.5	30	7000	10000	4.3	0.0102	6.6	15	•	•
0.18	0.25	**BN 71A 6**	1100	1.62	14.3	0.57	61	0.65	3.3	2.6	2.8	G	8.4	0.0200	5.5	12.1	**FD 03**	5	44	6500	10000	9.5	0.0226	8.2	18	•	•
0.25	0.33	**BN 71B 6**	1100	2.1	18.9	0.75	64	0.65	3.2	2.6	2.7	G	10.9	0.0259	6.7	14.8	**FD 03**	5	44	6200	8000	12.0	0.0285	9.5	21	•	•
0.37	0.5	**BN 71C 6**	1100	3.2	28.3	1.08	66	0.65	3.3	2.6	2.4	G	12.9	0.0306	7.7	17	**FD 53**	7.5	66	4000	7000	14.0	0.0332	10.4	23	•	•
0.37	0.5	**BN 80A 6**	1130	3.2	27.9	1.07	67	0.65	3.9	2.6	2.8	H	21.0	0.0499	10	22	**FD 04**	10	88	4100	5500	23.0	0.0546	13.6	30	•	•
0.55	0.75	**BN 80B 6**	1140	4.7	41.4	1.38	76	0.66	4.9	3.2	3.4	J	25.0	0.0594	11.3	25	**FD 04**	15	133	3800	5000	27.0	0.0641	15.4	34	•	•
0.75	1	**BN 80C 6**	1140	6.3	55.8	2.1	72	0.62	4.8	3.2	3.3	J	28.0	0.0664	12.2	27	**FD 04**	15	133	2700	5000	30.0	0.0712	16.1	35	•	•
0.75	1	**BN 90S 6**	1140	6.2	55	2.05	73	0.63	4.5	2.9	3.1	J	26.0	0.0618	12.6	28	**FD 14**	15	133	2700	4000	28.0	0.0665	16.8	37	•	•
1.1	1.5	**BN 90L 6**	1140	9.4	83	2.83	75	0.65	4.3	2.8	2.9	H	33.0	0.0784	15	33	**FD 05**	26	230	2000	3500	37.0	0.0879	21	46	•	•
1.5	2	**BN 100LA 6**	1140	12.5	111	3.75	76	0.66	4.5	2.4	2.8	H	82.0	0.195	22	49	**FD 15**	40	354	1500	3000	86.0	0.204	28	62	•	•
1.85	2.5	**BN 100LB 6**	1150	15.4	136.3	4.3	77	0.70	5.5	2.3	2.5	J	95.0	0.225	24	53	**FD 15**	40	354	1300	2800	99.0	0.235	30	66	•	•
2.2	3	**BN 112M 6**	1150	18.5	164	4.9	81	0.69	5.5	2.8	2.9	J	168.0	0.400	32	71	**FD 06S**	60	530	—	1250	177.0	0.420	42	93	•	•
3.0	4	**BN 132S 6**	1150	24.9	220.4	6.3	78	0.77	5.9	2.1	2.3	J	216.0	0.513	36	79	**FD 56**	75	664	—	1100	226.0	0.536	49	108	•	•
3.7	5	**BN 132MA 6**	1150	31.0	274	7.3	80	0.79	6.1	2.5	3.1	J	295.0	0.701	45	99	**FD 06**	100	885	—	900	305.0	0.724	58	128		•
4.0	5.5	**BN 132MA 6**	1160	32.9	291.2	8.3	82	0.74	5.4	2.4	2.9	G	295.0	0.701	45	99	**FD 06**	100	885	—	900	308.0	0.724	58	128	•	
5.5	7.5	**BN 132MB 6**	1140	46.8	414	11.2	82	0.75	5.4	2.7	2.9	H	383.0	0.910	56	123	**FD 07**	150	1328	—	800	406.0	0.964	72	159	•	•
7.5	10	**BN 160M 6**	1160	61.4	543	13.5	85	0.82	5.8	2.3	2.8	G	740.0	1.758	83	183	**FD 08**	170	1500	—	550	815.0	1.936	112	247	•	•
11.0	15	**BN 160L 6**	1160	92.1	815	19.8	84	0.83	5.8	2.5	2.9	G	970.0	2.304	103	227	**FD 08**	200	1770	—	400	1045.0	2.482	133	293	•	•
15.0	20	**BN 180L 6**	1150	124.6	1102.4	28.3	86	0.77	6.2	2.6	2.8	H	1550.0	3.678	130	287	**FD 09**	300	2655	—	360	1750.0	4.153	170	375	•	•
18.5	25	**BN 200LA 6**	1150	153.6	1359.6	32.3	89	0.81	5.9	2.5	2.8	G	1700.0	4.034	145	320	**FD 09**	400	3540	—	340	1900.0	4.509	185	408	•	•

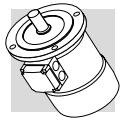

2P	3000 min^{-1} - S1	50 Hz

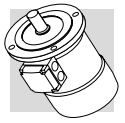

																		d.c. brake FD								Standard	CUS variant	CCC variant
P_n			n	M_n		In 400V	η%			cosφ	$\frac{I_s}{I_n}$	$\frac{M_s}{M_n}$	$\frac{M_a}{M_n}$	KVA code	J_m x 10^{-4}		IM B5		Mod	M_b		Z_o 1/h		J_m x 10^{-4}		IM B5		CE	CE + UL	CE + CCC
kW	hp		min^{-1}	Nm	lb·in	A	100%	75%	50%						kgm^2	lb·ft^2	Kg	lbs		Nm	lb·in	NB	SB	kgm^2	lb·ft^2	Kg	lbs			
0.18	0.25	**M 05A 2**	2730	0.63	5.6	0.56	59.9	56.9	51.9	0.77	3.00	2.10	2.00	F	2.0	0.0047	3.2	7.1	**FD 02**	1.75	15	3900	4800	2.6	0.0062	4.9	11	•	•	
0.25	0.33	**M 05B 2**	2740	0.87	7.7	0.72	66.0	64.8	64.8	0.76	3.30	2.30	2.30	D	2.3	0.0055	3.6	7.9	**FD 02**	1.75	15	3900	4800	3	0.0071	5.3	12	•	•	
0.37	0.5	**M 05C 2**	2800	1.26	11.2	0.99	69.1	66.8	66.8	0.78	3.90	2.60	2.60	A	3.3	0.0078	4.8	11	**FD 02**	3.5	31	3600	4500	3.9	0.0093	6.5	14	•	•	
0.55	0.75	**M 1SD 2**	2820	1.86	16.5	1.37	76.0	75.8	74.8	0.76	5.00	2.90	2.80	A	4.1	0.0097	5.8	13	**FD 03**	5	44	2900	4200	5.3	0.0126	8.5	19	•	•	
0.75	1	**M 1LA 2**	2810	2.6	23	1.86	76.6	76.2	76.2	0.76	5.10	3.10	2.80	J	5	0.0119	6.9	15	**FD 03**	5	44	1900	3300	6.1	0.0145	9.6	21	•	•	
1.1	1.5	**M 2SA 2**	2800	3.8	33.6	2.57	76.4	76.2	75.0	0.81	4.80	2.80	2.40	H	9	0.0214	8.8	19	**FD 04**	10	89	1500	3000	10.6	0.0252	12.7	26	•	•	
1.5	2	**M 2SB 2**	2800	5.1	45	3.4	79.1	79.5	77.2	0.81	4.90	2.70	2.40	F	11.4	0.0271	10.6	23	**FD 04**	15	133	1300	2600	13	0.0308	14.5	22	•	•	
2.2	3	**M 3SA 2**	2880	7.3	65	4.8	82.7	82.1	81.0	0.8	6.30	2.90	2.70	K	24	0.0570	15.5	34	**FD 15**	26	230	1100	2400	28	0.0664	22	49	•	•	
3	4	**M 3LA 2**	2860	10	89	6.7	81.5	81.3	77.4	0.79	5.60	2.60	2.20	J	31	0.0736	18.7	41	**FD 15**	26	230	700	1600	35	0.0831	25	55	•	•	
4	5.5	**M 3LB 2**	2870	13.3	118	8.7	83.1	83.0	77.8	0.8	5.80	2.70	2.50	A	39	0.0925	22	49	**FD 15**	40	354	450	900	43	0.1020	28	62	•	•	
5.5	7.5	**M 4SA 2**	2890	18.2	161	11.2	84.7	84.5	81.2	0.84	5.90	2.60	2.20	H	101	0.2397	33	73	**FD 06**	50	443	—	600	112	0.2658	46	101	•	•	
7.5	10	**M 4SB 2**	2900	25	221	14.7	86.5	86.3	84.4	0.85	6.40	2.60	2.20	J	134	0.3180	40	88	**FD 06**	50	443	—	550	145	0.3441	53	117	•	•	
9.2	12.5	**M 4LA 2**	2930	30	266	17.7	87.0	86.5	83.6	0.86	6.70	2.80	2.30	J	178	0.4224	51	112	**FD 56**	75	664	—	430	189	0.4485	64	141	•	•	
11	15	**M 4LC 2**	2920	36	319	20.6	87.6	87.0	86.0	0.88	6.90	2.90	2.50	J	210	0.4983	60	132										•	•	
15	20	**M 5SB 2**	2930	49	434	28.1	89.6	89.4	88.0	0.86	7.10	2.60	2.30	J	340	0.8068	70	154										•	•	
18.5	25	**M 5SC 2**	2930	60	531	34	90.4	90.1	89.0	0.86	7.60	2.70	2.30	K	420	0.9967	83	183										•	•	
22	30	**M 5LA 2**	2930	72	637	40	89.9	89.7	89.5	0.88	7.80	2.60	2.40	K	490	1.1628	95	209										•	•	

4P	1500 min^{-1} - S1	50 Hz

																		d.c. brake FD									Standard	CUS variant	CCC variant
P_n			n	M_n		In 400V	η%			cosφ	$\frac{I_s}{I_n}$	$\frac{M_s}{M_n}$	$\frac{M_a}{M_n}$	KVA code	J_m x 10^{-4}		IM B5		Mod	M_b		Z_o 1/h		J_m x 10^{-4}		IM B5		CE	CE + UL	CE + CCC
kW	hp		min^{-1}	Nm	lb·in	A	100%	75%	50%						kgm^2	lb·ft^2	Kg	lbs		Nm	lb·in	NB	SB	kgm^2	lb·ft^2	Kg	lbs			
0.09	0.12	**M 0B**	**4**	1350	0.64	5.7	0.42	51.7	47.6	42.9	0.6	2.6	2.5	2.4	H	1.5	0.0036	2.9	6.4										•	•	•
0.12	0.16	**M 05A**	**4**	1350	0.85	7.5	0.47	59.8	56.2	47	0.62	2.6	1.9	1.8	E	2	0.0047	3.2	7.1	**FD 02**	1.75	15	10000	13000	2.6	0.0062	4.9	11	•	•	
0.18	0.25	**M 05B**	**4**	1320	1.3	11.5	0.71	54.8	52.9	52.5	0.67	2.6	2.2	2	A	2.3	0.0055	3.6	7.9	**FD 02**	3.5	31	10000	13000	3	0.0071	5.3	12	•	•	
0.25	0.33	**M 05C**	**4**	1340	1.78	15.8	0.8	65.3	65	57.9	0.69	2.7	2.1	1.9	E	3.3	0.0078	4.8	11	**FD 02**	3.5	31	7800	10000	3.9	0.0093	6.5	14	•	•	
0.37	0.5	**M 1SD**	**4**	1370	2.6	23	1.05	66.8	66.7	63	0.76	3.7	2	1.9	D	6.9	0.0164	5.5	12	**FD 03**	5	44	6000	9400	8	0.0190	8.2	18	•	•	
0.55	0.75	**M 1LA**	**4**	1380	3.8	33.6	1.55	69	68.9	68.8	0.74	4.1	2.3	2.3	G	9.1	0.0216	6.9	15	**FD 53**	7.5	66	4300	8700	10.2	0.0242	9.6	21	•	•	
0.75	1	**M 2SA**	**4**	1400	5.1	45	1.85	75	74.5	69.3	0.78	4.9	2.7	2.5	A	20	0.0475	9.2	20	**FD 04**	15	133	4100	7800	22	0.0522	13.1	29	•	•	
1.1	1.5	**M 2SB**	**4**	1400	7.5	66	2.66	76.4	76.2	70.4	0.78	5.1	2.8	2.5	G	25	0.0593	10.6	23	**FD 04**	15	133	2600	5300	27	0.0641	14.5	32	•	•	
1.5	2	**M 3SA**	**4**	1410	10.2	90	3.5	79.6	80.5	79.3	0.77	4.6	2.1	2.1	D	34	0.0807	15.5	34	**FD 15**	26	230	2800	4900	38	0.0902	22	49	•	•	
2.2	3	**M 3LA**	**4**	1410	14.9	132	5.2	81.1	81.4	79.9	0.75	4.5	2.2	2	A	40	0.0949	17	37	**FD 15**	40	354	2600	4700	44	0.1044	24	53	•	•	
3	4	**M 3LB**	**4**	1410	20	177	6.8	82.6	83.8	83.7	0.77	5	2.3	2.2	G	54	0.1281	21	46	**FD 15**	40	354	2400	4400	58	0.1376	27	60	•	•	
4	5.5	**M 3LC**	**4**	1400	27	239	9	82.7	83.1	80.5	0.78	4.7	2.3	2.2	F	61	0.1448	23	51	**FD 55**	55	487	—	1300	65	0.1542	29	64	•	•	
5.5	7.5	**M 4SA**	**4**	1440	36	319	11.6	84.7	84.8	82.5	0.81	5.5	2.3	2.2	A	213	0.5055	42	93	**FD 56**	75	664	—	1050	223	0.5292	55	121	•	•	
7.5	10	**M 4LA**	**4**	1440	50	443	15.5	86	86.3	85.3	0.81	5.7	2.5	2.4	G	270	0.6407	51	112	**FD 06**	100	885	—	950	280	0.6645	64	141	•	•	
9.2	12.5	**M 4LB**	**4**	1440	61	540	18.8	88.4	88.6	87.5	0.81	5.9	2.7	2.5	G	319	0.7570	57	126	**FD 07**	150	1328	—	900	342	0.8116	73	161	•	•	
11	15	**M 4LC**	**4**	1440	73	646	22.4	87.6	87.8	86	0.81	6	2.7	2.5	G	360	0.8543	65	143	**FD 07**	150	1328	—	850	382	0.9065	81	179	•	•	
15	20	**M 5SB**	**4**	1460	98	867	30.1	88.7	88.5	88.4	0.81	6	2.3	2.1	G	650	1.5425	85	187	**FD 08**	200	1770	—	750	725	1.7205	115	254	•	•	
18.5	25	**M 5LA**	**4**	1460	121	1071	37	89.3	89.5	89.2	0.81	6.2	2.6	2.5	H	790	1.8747	101	223	**FD 08**	250	2213	—	700	865	2.0527	131	289	•	•	

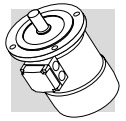

6P	1000 min^{-1} - S1	50 Hz

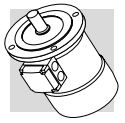

																				d.c. brake FD								Standard	CUS variant	CCC variant
P_n			n	M_n		In 400V	η%			cosφ	$\frac{I_s}{I_n}$	$\frac{M_s}{M_n}$	$\frac{M_a}{M_n}$	KVA code	J_m x 10^{-4}		IM B5		Mod	M_b		Z_o 1/h		J_m x 10^{-4}		IM B5		CE	CE + UL	CE + CCC
kW	hp		min^{-1}	Nm	lb·in	A	100%	75%	50%						kgm^2	lb·ft^2	Kg	lbs		Nm	lb·in	NB	SB	kgm^2	lb·ft^2	Kg	lbs			
0.09	0.12	**M 05A 6**	880	0.98	8.7	0.6	41	41	32.9	0.53	2.1	2.1	1.8	J	3.4	0.0081	4.3	9.5	**FD 02**	3.5	31	9000	14000	4	0.0095	6	13	•	•	•
0.12	0.16	**M 05B 6**	870	1.32	11.7	0.64	45	44	41.8	0.6	2.1	1.9	1.7	F	3.7	0.0088	4.6	10	**FD 02**	3.5	31	9000	14000	4.3	0.0102	6.3	14	•	•	
0.18	0.25	**M 1SC 6**	900	1.91	16.9	0.68	55	55.5	51	0.69	2.6	1.9	1.7	A	8.4	0.0199	5.1	11	**FD 03**	5	44	8100	13500	9.5	0.0225	7.8	17	•	•	
0.25	0.33	**M 1SD 6**	900	2.7	23.9	0.82	62	58.5	51.4	0.71	2.6	1.9	1.7	D	10.9	0.0259	6.3	14	**FD 03**	5	44	7800	13000	12	0.0285	9	20	•	•	
0.37	0.5	**M 1LA 6**	910	3.9	34.5	1.17	66	60	53.3	0.69	3	2.4	2	B	12.9	0.0306	7.3	16	**FD 53**	7.5	66	5100	9500	14	0.0332	10	22	•	•	
0.55	0.75	**M 2SA 6**	920	5.7	50	1.67	70	69.8	64.3	0.68	3.9	2.6	2.2	G	25	0.0593	10.6	23	**FD 04**	15	133	4800	7200	27	0.0641	14.5	32	•	•	
0.75	1	**M 2SB 6**	920	7.8	69	2.38	70	70	64.4	0.65	3.8	2.5	2.2	A	28	0.0664	11.5	25	**FD 04**	15	133	3400	6400	30	0.0712	15.4	34	•	•	
1.1	1.5	**M 3SA 6**	920	11.4	101	2.9	75	74	72	0.72	4.3	2	1.8	G	62	0.1470	17	37	**FD 15**	26	230	2700	5000	66	0.1571	23	51	•	•	
1.5	2	**M 3LA 6**	940	15.2	135	4	75.2	74.2	70.3	0.72	4.1	2.1	2	D	82	0.1946	21	46	**FD 15**	40	354	1900	4100	86	0.2041	27	60	•	•	
1.85	2.5	**M 3LB 6**	930	19	168	4.8	76.6	72.8	62.6	0.73	4.6	2.1	2	A	95	0.2254	23	51	**FD 15**	40	354	1700	3600	99	0.2349	29	64	•	•	
2.2	3	**M 3LC 6**	930	23	204	5.8	77.7	76.8	72.4	0.71	4.7	2.3	2.1	G	95	0.2254	23	51	**FD 55**	55	487	—	1900	99	0.2349	29	64	•	•	
3	4	**M 4SA 6**	940	30	266	7.1	79.7	77	75.1	0.76	5.1	1.9	1.8	G	216	0.5126	34	75	**FD 56**	75	664	—	1400	226	0.5363	47	104	•	•	
4	5.5	**M 4LA 6**	950	40	354	9.2	81.4	81.5	79.5	0.77	5.5	2	1.8	A	295	0.7000	43	95	**FD 06**	100	885	—	1200	305	0.7238	56	123	•	•	
5.5	7.5	**M 4LB 6**	945	56	496	12.2	83.1	80.9	79.1	0.78	6.1	2.1	1.9	H	383	0.9089	54	119	**FD 07**	150	1328	—	1050	406	0.9635	70	154	•	•	
7.5	10	**M 5SA 6**	955	75	664	15.7	85	85	84.8	0.81	5.9	2.2	2	H	740	1.7560	69	152	**FD 08**	170	1505	—	900	815	1.9340	98	216	•	•	
11	15	**M 5SB 6**	960	109	965	22.7	86.4	86.5	85.9	0.81	6.6	2.5	2.3	H	970	2.3018	89	196	**FD 08**	200	1770	—	800	1045	2.4798	119	262	•	•	

2P	3600 min^{-1} - S1	60 Hz

																	d.c. brake FD								Standard	CUS variant
P_n			n	M_n		In 460V	η%	cosφ	$\frac{I_s}{I_n}$	$\frac{M_s}{M_n}$	$\frac{M_a}{M_n}$	KVA code	J_m x 10^{-4}		IM B5		Mod	M_b		Z_o 1/h		J_m x 10^{-4}		IM B5		CE	CE + UL
kW	hp		min^{-1}	Nm	lb·in	A	100%						kgm^2	lb·ft^2	Kg	lbs		Nm	lb·in	NB	SB	kgm^2	lb·ft^2	Kg	lbs		
0.18	0.25	**M 05A 2**	3380	0.53	4.7	0.53	58	0.74	4.1	3	2.4	H	2.0	0.0048	3.2	7.1	**FD 02**	1.75	15	2700	3300	2.6	0.0062	4.9	11	•	•
0.25	0.33	**M 05B 2**	3370	0.70	6.2	0.69	61	0.73	4.9	3.2	2.9	K	2.3	0.0055	3.6	7.9	**FD 02**	1.75	15	2700	3300	3.0	0.0071	5.3	12	•	•
0.37	0.5	**M 05C 2**	3430	1.04	9.2	0.88	69	0.76	5.5	3.3	3.2	J	3.3	0.0078	4.8	10.6	**FD 02**	3.5	30	2500	3000	3.9	0.0093	6.5	14	•	•
0.55	0.75	**M 1SD 2**	3450	1.55	13.7	1.23	76	0.75	6.2	3.4	3.4	K	4.1	0.0097	5.8	12.8	**FD 03**	5	44	2200	2700	5.3	0.0126	8.5	19	•	•
0.75	1	**M 1LA 2**	3440	2.07	18.3	1.62	77	0.75	6.2	3.8	3.5	K	5.0	0.0119	6.9	15.2	**FD 03**	5	44	1500	2100	6.1	0.0145	9.5	21	•	•
1.1	1.5	**M 2SA 2**	3430	3.12	27.6	2.4	77	0.76	6.2	3.8	2.9	J	9.0	0.0214	8.8	19.4	**FD 04**	10	88	1200	1600	10.6	0.0252	12.7	28	•	•
1.5	2	**M 2SB 2**	3415	4.16	36.8	2.9	80	0.79	6	3.3	2.9	H	11.4	0.0271	10.4	23	**FD 04**	15	133	1000	1300	13.0	0.0309	14.5	32	•	•
2.2	3	**M 3SA 2**	3430	6.21	55	4.2	81	0.83	6	2.4	3.2	H	24.0	0.0570	15.4	34	**FD 15**	26	230	800	1000	28.0	0.0665	22	49	•	•
3	4	**M 3LA 2**	3470	8.3	73.5	5.9	79	0.81	7.6	3.7	4	K	31.0	0.0736	18.7	34	**FD 15**	40	354	450	600	35.0	0.0831	25	55	•	•
3.7	5	**M 3LB 2**	3490	10.4	92	6.7	84	0.83	6.7	2.9	3.2	J	39.0	0.0926	22	49	**FD 15**	40	354	360	500	43.0	0.102	28	62		•
4	5.4	**M 3LB 2**	3460	11.0	97.4	7.4	83	0.82	7.9	4	3.6	K	39.0	0.0926	22	49	**FD15**	40	354	360	500	43.0	0.102	28	62	•	
5.5	7.5	**M 4SA 2**	3490	15.3	135	9.8	83	0.86	6.4	2.7	2.6	H	101	0.2400	33	72	**FD 06**	50	440	—	400	112.0	0.266	46	101	•	•
7.5	10	**M 4SB 2**	3490	20.5	181	13	82	0.88	6.2	2.8	2.7	H	134	0.318	40	88	**FD 06**	50	440	—	350	145.0	0.344	53	117	•	•
9.2	12.5	**M 4LA 2**	3530	24.9	220	15.5	87	0.86	7.7	3	2.9	K	178	0.422	51	112	**FD 56**	75	664	—	280	189.0	0.449	64	141	•	•
11	15	**M 4LC 2**	3510	30.6	271	18.3	87	0.88	6.9	2.7	2.9	H	210	0.499	60	132										•	•
15	20	**M 5SB 2**	3510	40.6	359	24.2	86	0.9	6	2.5	2.8	G	340	0.808	70	154										•	•
18.5	25	**M 5SC 2**	3520	50.7	449	29.2	88	0.91	6.9	2.8	2.7	H	420	0.998	83	183										•	•
22	30	**M 5LA 2**	3520	60.7	537	35.1	88	0.91	6.9	2.8	2.8	H	490	1.164	95	209										•	•

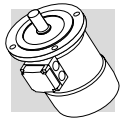

4P	1800 min^{-1} - S1	60 Hz

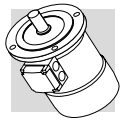

																	d.c. brake FD								Standard	CUS variant
P_n			n	M_n		In 460V	η%	cosφ	$\frac{I_s}{I_n}$	$\frac{M_s}{M_n}$	$\frac{M_a}{M_n}$	KVA code	J_m x 10^{-4}		IM B5		Mod	M_b		Z_o 1/h		J_m x 10^{-4}		IM B5		CE	CE + UL
kW	hp		min^{-1}	Nm	lb·in	A	100%						kgm^2	lb·ft^2	Kg	lbs		Nm	lb·in	NB	SB	kgm^2	lb·ft^2	Kg	lbs		
0.09	0.12	**M 0B 4**	1670	0.51	4.5	0.37	59	0.52	2.8	2.9	3	H	1.5	0.0036	2.9	6.4										•	•
0.12	0.16	**M 05A 4**	1690	0.68	6	0.43	60	0.57	3.1	2.4	2.3	H	2.0	0.0048	3.2	7.1	**FD 02**	1.75	15	7000	9000	2.6	0.0062	4.9	11	•	•
0.18	0.25	**M 05B 4**	1670	1.06	9.4	0.65	58	0.6	3.2	2.8	2.4	H	2.3	0.0055	3.6	7.9	**FD 02**	3.5	30	7000	9000	3.0	0.0071	5.3	12	•	•
0.25	0.33	**M 05C 4**	1670	1.40	12.4	0.77	64	0.65	3.3	2.5	2.4	G	3.3	0.0078	4.8	10.6	**FD 02**	3.5	30	6000	8000	3.9	0.0093	6.5	14	•	•
0.37	0.5	**M 1SD 4**	1700	2.09	18.5	0.96	66	0.73	4.5	2.6	2.4	H	6.9	0.0164	5.5	12.1	**FD 03**	5.0	44	4800	7500	8.0	0.019	8.2	18	•	•
0.55	0.75	**M 1LA 4**	1710	3.12	27.6	1.37	72	0.7	4.9	3	2.8	J	9.1	0.0216	6.9	15.2	**FD 53**	7.5	66	3400	7000	10.2	0.0242	9.5	21	•	•
0.75	1	**M 2SA 4**	1720	4.14	36.6	1.61	78	0.75	6.2	3.4	3.1	J	20.0	0.0475	9.1	20	**FD 04**	15	133	3000	6000	22.0	0.0523	13.2	29	•	•
1.1	1.5	**M 2SB 4**	1720	6.21	55	2.33	78	0.76	6.3	3.4	3	J	25	0.0594	10.4	23	**FD 04**	15	133	2000	4200	27.0	0.0641	14.5	32	•	•
1.5	2	**M 3SA 4**	1720	8.25	73	3.15	82	0.73	5.7	2.9	2.6	J	34.0	0.0808	15.4	34	**FD 15**	26	230	1500	3000	38.0	0.0903	22	49	•	•
2.2	3	**M 3LA 4**	1720	12.4	110	4.67	81	0.73	5.5	2.7	2.4	H	40.0	0.0960	16.8	37	**FD 15**	40	354	1000	2700	44.0	0.105	24	53	•	•
3	4	**M 3LB 4**	1720	16.7	147.8	6.2	82.6	0.74	5.6	2.3	2.2	H	54.0	0.128	21	46	**FD 15**	40	354	600	2300	58.0	0.138	27	60	•	•
3.7	5	**M 3LC 4**	1730	20.6	182	7.5	84	0.74	5.6	2.8	2.9	H	61.0	0.145	23	51	**FD 55**	55	480	—	1200	65.0	0.154	29	64		•
4	5.4	**M 3LC 4**	1710	22.3	197.4	7.9	84	0.76	5.4	2.7	2.8	H	61.0	0.145	23	51	**FD 55**	55	480	—	1200	65.0	0.154	29	64	•	
5.5	7.5	**M 4SA 4**	1730	30.8	273	9.8	84	0.84	6.3	2.9	2.6	H	213.0	0.506	42	93	**FD 56**	75	664	—	850	223.0	0.53	55	121	•	•
7.5	10	**M 4LA 4**	1740	40.9	362	13.2	85	0.84	6.1	2.9	2.9	H	270.0	0.641	51	112	**FD 06**	100	885	—	700	280.0	0.665	64	141	•	•
9.2	12.5	**M 4LB 4**	1750	50.2	444.3	16.5	87	0.81	6.8	2.7	2.5	H	319.0	0.757	57	126	**FD 07**	150	1328	—	728	342.0	0.812	73	161	•	•
11	15	**M 4LC 4**	1740	61.4	543	19.4	88	0.81	6.5	3.1	3	H	360.0	0.855	65	143	**FD 07**	150	1328	—	600	382.0	0.907	81	179	•	•
15	20	**M 5SB 4**	1750	81.4	720	24.9	90	0.84	5.8	2.3	2.5	G	650.0	1.544	85	187	**FD 08**	200	1770	—	400	725.0	1.7202	115	254	•	•
18.5	25	**M 5LA 4**	1760	101	895	31.1	90	0.83	5.8	2.5	3	G	790.0	1.876	101	223	**FD 08**	250	2210	—	300	865.0	2.054	131	289	•	•

6P	1200 min^{-1} - S1	60 Hz

																	d.c. brake FD								Standard	CUS variant
P_n			n	M_n		In 460V	η%	cosφ	$\frac{I_s}{I_n}$	$\frac{M_s}{M_n}$	$\frac{M_a}{M_n}$	KVA code	J_m x 10^{-4}		IM B5		Mod	M_b		Z_o 1/h		J_m x 10^{-4}		IM B5		CE	CE + UL
kW	hp		min^{-1}	Nm	lb·in	A	100%						kgm^2	lb·ft^2	Kg	lbs		Nm	lb·in	NB	SB	kgm^2	lb·ft^2	Kg	lbs		
0,09	0,12	**M 05A 6**	1100	0,78	6,9	0,52	47	0,46	2,4	2,9	2,3	K	3,4	0,0081	4,3	9,5	**FD 02**	3,5	30	7000	10000	4,0	0,0095	6	13	•	•
0,12	0,16	**M 05B 6**	1100	1,04	9,2	0,57	49	0,54	2,3	2,4	2,2	H	3,7	0,0088	4,6	10,1	**FD 02**	3,5	30	7000	10000	4,3	0,0102	6,3	14	•	•
0,18	0,25	**M 1SC 6**	1100	1,62	14,3	0,57	61	0,65	3,3	2,6	2	G	8,4	0,0200	5,1	11,2	**FD 03**	5	44	6500	10000	9,5	0,0226	7,8	17	•	•
0,25	0,33	**M 1SD 6**	1100	2,1	18,9	0,75	64	0,65	3,2	2,6	2,1	G	10,9	0,0259	6,3	13,9	**FD 03**	5	44	6200	8000	12,0	0,0290	9	20	•	•
0,37	0,5	**M 1LA 6**	1100	3,2	28,6	1,08	66	0,65	3,3	2,6	2,4	G	12,9	0,0306	7,3	16,1	**FD 53**	7,5	66	4000	7000	14,0	0,0330	10	22	•	•
0,55	0,75	**M 2SA 6**	1140	4,7	41,4	1,38	76	0,66	4,9	3,2	2,7	J	25,0	0,0594	10,4	23	**FD 04**	15	133	3800	5000	27,0	0,0641	14,5	32	•	•
0,75	1	**M 2SB 6**	1140	6,3	55	2,03	76	0,61	4,4	2,8	2,8	J	28,0	0,0665	11,3	25	**FD 04**	15	133	2700	5000	30,0	0,0713	15,4	34	•	•
1,1	1,5	**M 3SA 6**	1140	9,4	83	2,74	74	0,68	4,4	2,4	2,2	H	62	0,147	16,8	37	**FD 15**	26	230	2300	4500	66,2	0,157	23	51	•	•
1,5	2	**M 3LA 6**	1140	12,5	111	3,75	76	0,66	4,5	2,4	2,4	H	82,0	0,195	21	46	**FD 15**	40	354	1500	3000	86,0	0,204	27	60	•	•
1,85	2,5	**M3LB 6**	1150	15,4	136,0	4,3	77	0,70	5,5	2,3	2,5	J	95,0	0,226	23	51	**FD 15**	40	354	1300	2800	99,0	0,235	29	64	•	•
2,2	3	**M 3LC 6**	1140	18,8	166	5,3	77	0,68	5,1	2,6	2,6	J	95,0	0,226	23	51	**FD 55**	55	480	—	1500	99,0	0,235	29	64	•	•
3	4	**M 4SA 6**	1150	24,9	220,4	6,3	78	0,77	5,9	2,1	2,3	J	216,0	0,513	34	75	**FD 56**	75	664	—	1100	226,0	0,536	47	104	•	•
3,7	5	**M 4LA 6**	1150	31,0	274	7,3	80	0,79	6,1	2,5	2,3	J	295,0	0,701	43	95	**FD 06**	100	885	—	900	305,0	0,724	56	123		•
4	5,5	**M 4LA 6**	1160	32,9	291,2	8,3	82	0,74	5,4	2,4	2,9	G	295,0	0,701	43	95	**FD 06**	100	885	—	900	305,0	0,724	56	123	•	
5,5	7,5	**M 4LB 6**	1140	46,8	414	11,2	82	0,75	5,4	2,7	2,3	H	383,0	0,910	54	119	**FD 07**	150	1328	—	800	406,0	0,964	70	154	•	•
7,5	10	**M 5SA 6**	1160	61,4	543	13,5	85	0,82	5,8	2,3	2,4	G	740,0	1,758	69	152	**FD 08**	170	1500	—	550	815,0	1,936	98	216	•	•
11	15	**M 5SB 6**	1160	92,1	815	19,8	84	0,83	5,8	2,5	2,7	G	970,0	2,304	89	196	**FD 08**	200	1770	—	400	1045,0	2,482	119	262	•	•

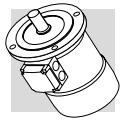

BN - IM B5

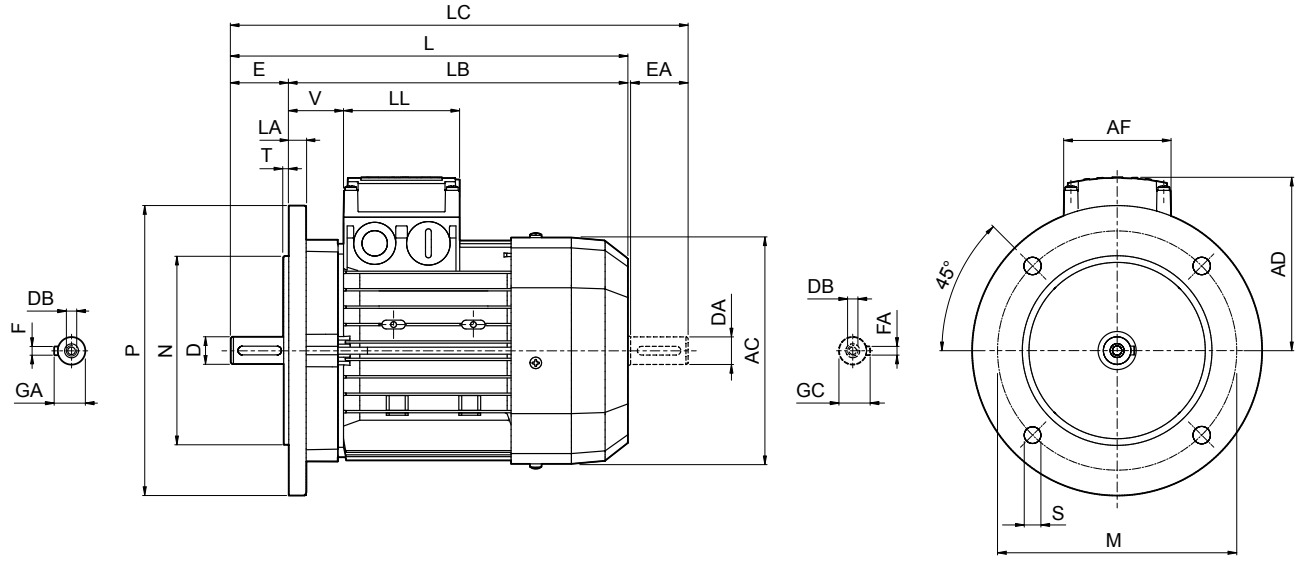

	Shaft					Flange						Motor							
	D DA	**E EA**	**DB**	**GA GC**	**F FA**	**M**	**N**	**P**	**S**	**T**	**LA**	**AC**	**L**	**LB**	**LC**	**AD**	**AF**	**LL**	**V**
BN 56	9	20	M3	10.2	3	100	80	120	7	3	8	110	185	165	207	91	74	80	34
BN 63	11	23	M4	12.5	4	115	95	140	9.5		10	121	207	184	232	95			26
BN 71	14	30	M5	16	5	130	110	160		3.5		138	249	219	281	108			37
BN 80	19	40	M6	21.5	6	165	130	200	11.5		11.5	156	274	234	315	119			38
BN 90	24	50	M8	27	8							176	326	276	378	133	98	98	44
BN 100	28	60	M10	31		215	180	250	14	4	14	195	367	307	429	142			50
BN 112											15	219	385	325	448	157			52
BN 132	38	80	M12	41	10	265	230	300			20	258	493	413	576	193	118	118	58
BN 160 MR	42 38(1)	110 80(1)	M16 M12(1)	45 41(1)	12 10(1)	300	250	350	18.5	5	15		562	452	645				218
BN 160 M												310	596	486	680	245	187	187	51
BN 160 L																			
BN 180 M	48 38(1)			51.5 41(1)	14 10(1)							310	640	530	724				
BN 180 L	48 42(1)	110 110(1)	M16 M16(1)	51.5 45(1)	14 12(1)						18	348	708	598	823	261			52
BN 200 L	55 42(1)		M20 M16(1)	59 45(1)	16 12(1)	350	300	400					722	612	837				66

NOTE: 1) These values refer to the rear shaft end.

BN - IM B5

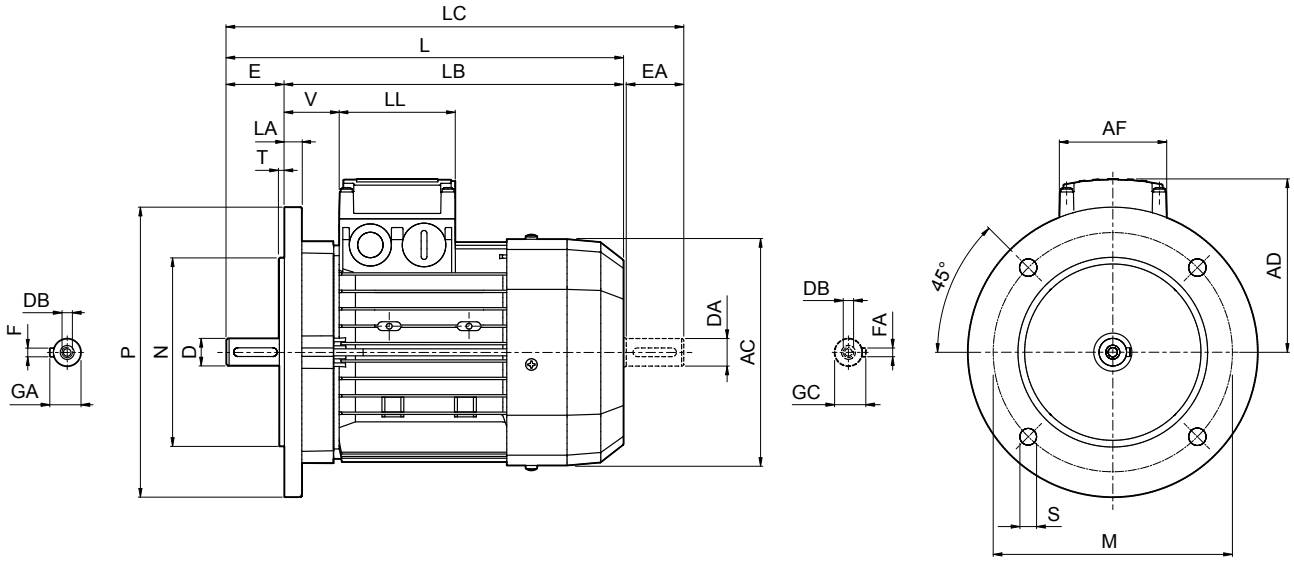

Dimensions are in Inch except when shown in *italic [mm]*

	Shaft					Flange						Motor							
	D DA	**E EA**	**DB**	**GA GC**	**F FA**	**M**	**N**	**P**	**S**	**T**	**LA**	**AC**	**L**	**LB**	**LC**	**AD**	**AF**	**LL**	**V**
BN 56	0.354	0.787	*M3*	0.402	0.118	3.937	3.150	4.724	0.276	0.118	0.315	4.331	7.283	6.496	8.150	3.583	2.913	3.150	1.339
BN 63	0.433	0.906	*M4*	0.492	0.157	4.528	3.740	5.512	0.374		0.394	4.764	8.150	7.244	9.134	3.740			1.024
BN 71	0.551	1.181	*M5*	0.630	0.197	5.118	4.331	6.299		0.138		5.433	9.803	8.622	11.063	4.252			1.457
BN 80	0.748	1.575	*M6*	0.846	0.236	6.496	5.118	7.874	0.453		0.453	6.142	10.787	9.213	12.402	4.685			1.496
BN 90	0.945	1.969	*M8*	1.063	0.315							6.929	12.835	10.866	14.882	5.236	3.858	3.858	1.732
BN 100	1.102	2.362	*M10*	1.220		8.465	7.087	9.843	0.551	0.157	0.551	7.677	14.449	12.087	16.890	5.591			1.969
BN 112											0.591	8.622	15.157	12.795	17.638	6.181			2.047
BN 132	1.496	3.150	*M12*	1.614	0.394	10.433	9.055	11.811			0.787	10.157	19.409	16.260	22.677	7.598	4.646	4.646	2.283
BN 160 MR	1.654 1.496(1)	4.331 3.150(1)	*M16 M12(1)*	1.772 1.614(1)	0.472 0.395(1)	11.811	9.843	13.780	0.728	0.197	0.591		22.126	17.795	25.394				8.583
BN 160 M												12.205	23.465	19.134	26.772	9.646	7.362	7.362	2.008
BN 160 L																			
BN 180 M	1.890 1.496(1)	4.331 4.331(1)	*M16 M12(1)*	2.028 1.614(1)	0.551 0.394(1)							12.205	25.197	20.866	28.504				
BN 180 L	1.890 1.654(1)		*M16 M16(1)*	2.018 1.772(1)	0.551 0.472(1)						0.709	13.701	27.874	23.543	32.402	10.276			2.047
BN 200 L	2.165 1.654(1)		*M20 M16(1)*	2.323 1.772(1)	0.630 0.472(1)	13.780	11.811	15.748					28.425	24.094	32.953				2.598

NOTE: 1) These values refer to the rear shaft end.

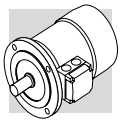

BN - IM B5 - FD

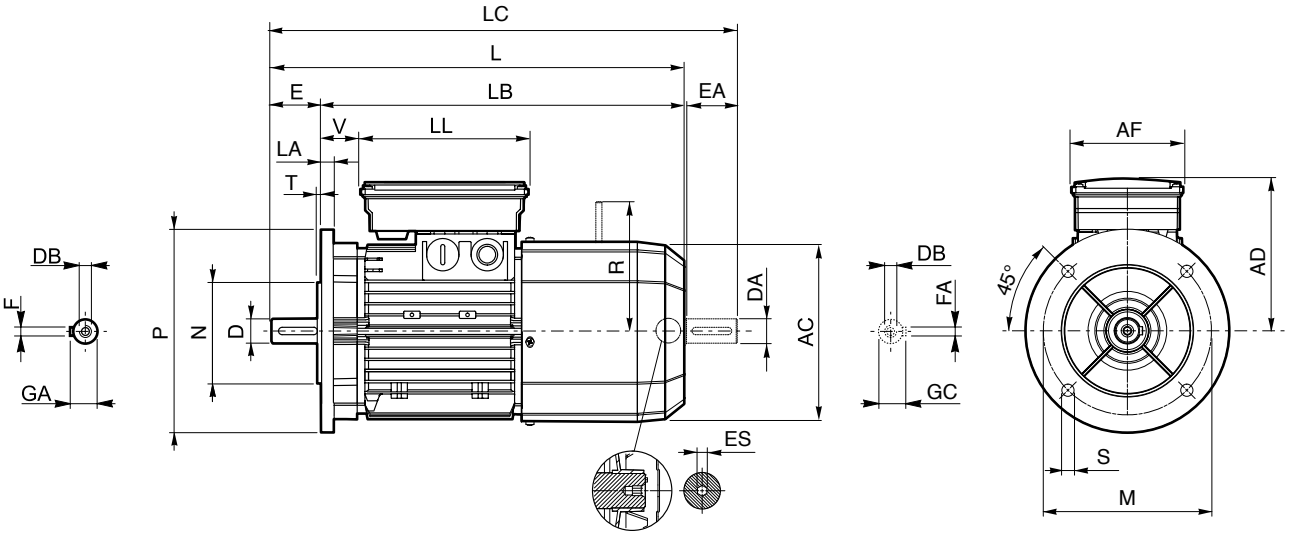

	Shaft					Flange						Motor									
	D DA	**E EA**	**DB**	**GA GC**	**F FA**	**M**	**N**	**P**	**S**	**T**	**LA**	**AC**	**L**	**LB**	**LC**	**AD**	**AF**	**LL**	**V**	**R**	**ES**
BN 63	11	23	M4	12.5	4	115	95	140	9.5	3	10	121	272	249	297	122			14	96	
BN 71	14	30	M5	16	5	130	110	160	9.5			138	310	280	342	135	98	133	25	103	5
BN 80	19	40	M6	21.5	6							156	346	306	388	146			41		
BN 90 S	24	50	M8	27	8	165	130	200	11.5	3.5	11.5	176	409	359	461	149				129	
BN 90 L																146	110	165	39		
BN 100	28	60	M10	31		215	180	250			14	195	458	398	521	158		165	62	160	
BN 112									14	4	15	219	484	424	547	173		165	73	199	6
BN 132	38	80	M12	41	10	265	230	300			20	258	603	523	686	210	140	188	46	204(2)	
BN 160 MR	42 38(1)	110 80(1)	M16 M12(1)	45 41(1)	12 10(1)	300	250	350	18.5	5	15		672	562	755				161	226	
BN 160 M												310	736	626	820	245	187	187	51	266	—
BN 160 L	42 38(1)																				
BN 180 M	48 38(1)			51.5 41(1)	14 10(1)								780	670	864						
BN 180 L	48 42(1)	110 110(1)	M16 M16(1)	51.5 45(1)	14 12(1)						18	348	866	756	981	261			52	305	
BN 200 L	55 42(1)		M20 M16(1)	59 45(1)	16 12(1)	350	300	400	18.5				878	768	993				64		

NOTE:
1) These values refer to the rear shaft end.
2) For FD07 brake value R=226.

ES hexagon is not supplied with PS option.

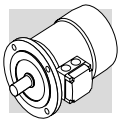

BN - IM B5 - FD

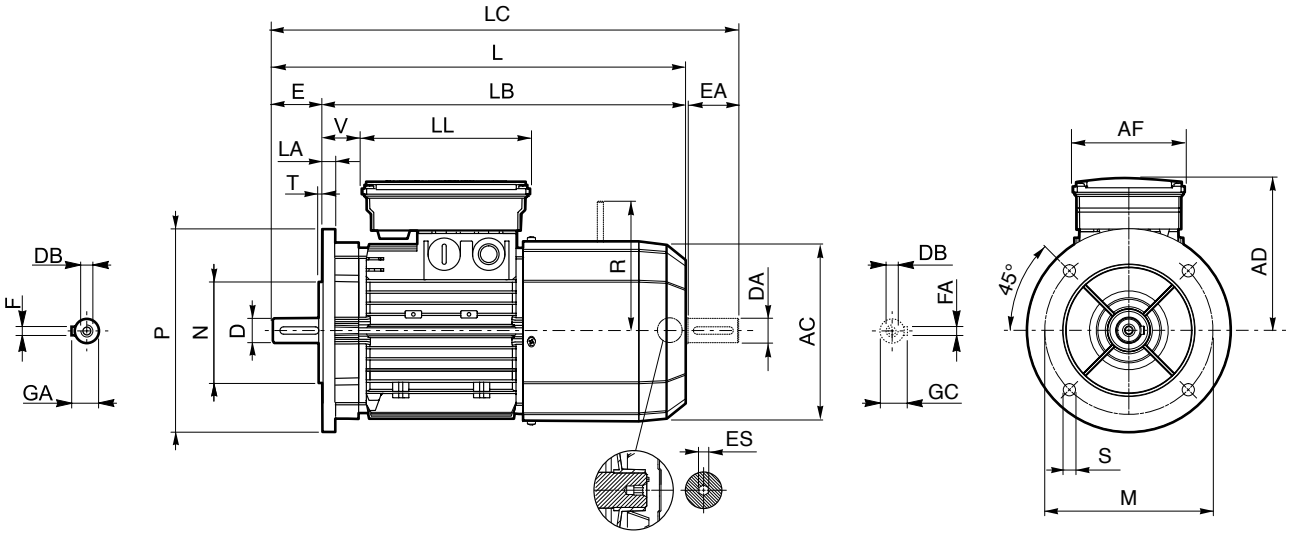

Dimensions are in Inch except when shown in *italic [mm]*

	Shaft					Flange						Motor									
	D DA	E EA	DB	GA GC	F FA	M	N	P	S	T	LA	AC	L	LB	LC	AD	AF	LL	V	R	ES
BN 63	0.433	0.906	*M4*	0.492	0.157	4.528	3.740	5.512	0.374	0.118	0.394	4.764	10.709	9.803	11.693	4.803	3.858	5.236	0.551	3.780	0.197
BN 71	0.551	1.181	*M5*	0.630	0.197	5.118	4.331	6.299	0.374	0.138		5.433	12.205	11.024	13.465	5.315			0.984	4.055	
BN 80	0.748	1.575	*M6*	0.846	0.236	6.496	5.118	7.874	0.453		0.453	6.142	13.622	12.047	15.276	5.748			1.614	5.079	
BN 90 S	0.945	1.969	*M8*	1.063	0.315							6.929	16.102	14.134	18.150	5.866	4.331	6.496	1.535		0.236
BN 90 L																5.748				6.299	
BN 100	1.102	2.362	*M10*	1.220		8.465	7.087	9.843	0.551	0.157	0.551	7.677	18.031	15.669	20.512	6.220		6.496	2.441		
BN 112											0.591	8.622	19.055	16.693	21.535	6.811		6.496	2.874	7.835	
BN 132	1.496	3.150	*M12*	1.614	0.394	10.433	9.055	11.811			0.787	10.157	23.740	20.591	27.008	8.268	5.512	7.402	1.811	8.031[2]	
BN 160 MR	1.654 1.496[1]	4.331 3.150[1]	*M16* *M12*[1]	1.772 1.614[1]	0.472 0.394[1]	11.811	9.843	13.780	0.728	0.197	0.591		26.457	22.126	29.724				6.339	8.898	
BN 160 M												12.205	28.976	24.646	32.283	9.646	7.362	7.362	2.008	10.472	—
BN 160 L	1.654 1.496[1]	4.331 3.150[1]	*M16* *M12*[1]	1.772 1.614[1]	0.472 0.394[1]								30.709	26.378	34.016						
BN 180 M	1.890 1.496[1]			2.028 1.614[1]	0.551 0.394[1]																
BN 180 L	1.890 1.654[1]	4.331	*M16* *M16*[1]	2.028 1.772[1]	0.551 0.472[1]						0.709	13.701	34.094	29.764	38.622	10.276			2.047	12.008	
BN 200 L	2.165 1.654[1]	4.331[1]	*M20* *M16*[1]	2.323 1.772[1]	0.630 0.472[1]	13.780	11.811	15.748	0.728				34.567	30.236	39.094				2.520		

NOTE:
1) These values refer to the rear shaft end.
2) For FD07 brake value R=226.

ES hexagon is not supplied with PS option.

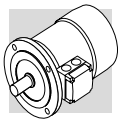

M

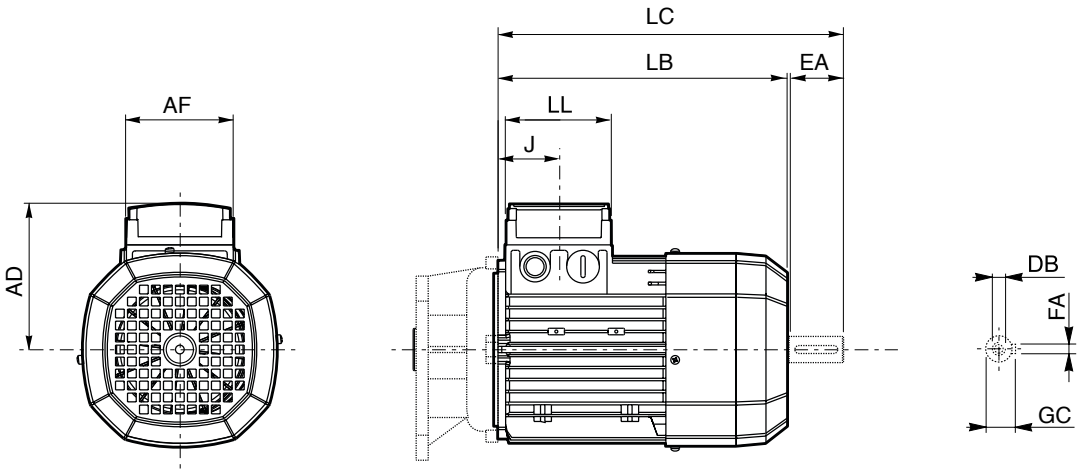

	Rear shaft end					Motor						
	DA	**EA**	**DB**	**FA**	**GC**	**AC**	**LB**	**LC**	**AF**	**LL**	**J**	**AD**
M 0	9	20	M3	3	10.2	110	133	155	74	80	42	91
M 05	11	23	M4	4	12.5	121	165	191			48	95
M 1	14	30	M5	5	16	138	187	219			45	108
M 2 S	19	40	M6	6	21.5	156	202	245			44	119
M 3 S	28	60	M10	8	31	195	230	293	98	98	53.5	142
M 3 L							262	325				
M 4	38	80	M12	10	41	258	361	444	118	118	64.5	193
M 4 LC							396	479				
M 5 S						310	418	502	187	187	77	245
M 5 L							462	546				

[mm]

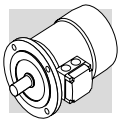

M

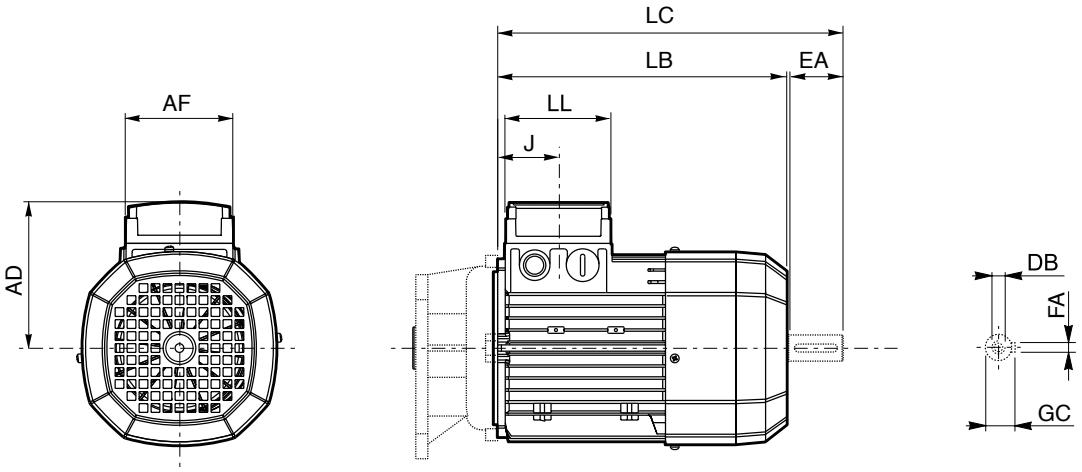

Dimensions are in Inch except when shown in *italic [mm]*

	Rear shaft end					Motor						
	DA	**EA**	**DB**	**FA**	**GC**	**AC**	**LB**	**LC**	**AF**	**LL**	**J**	**AD**
M 0	0.354	0.787	*M3*	0.118	0.402	4.331	5.236	6.102	2.913	3.150	1.654	3.583
M 05	0.433	0.906	*M4*	0.157	0.492	4.764	6.496	7.520			1.890	3.740
M 1	0.551	1.181	*M5*	0.197	0.630	5.433	7.362	8.622			1.772	4.252
M 2 S	0.748	1.575	*M6*	0.236	0.846	6.142	7.953	9.646			1.732	4.685
M 3 S	1.102	2.362	*M10*	0.315	1.220	7.677	9.055	11.535	3.858	3.858	2.106	5.591
M 3 L							10.315	12.795				
M 4	1.496	3.150	*M12*	0.394	1.614	10.157	14.213	17.480	4.646	4.646	2.539	7.598
M 4 LC							15.591	18.858				
M 5 S						12.205	16.457	19.764	7.362	7.362	3.031	9.646
M 5 L							18.189	21.496				

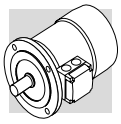

M - FD

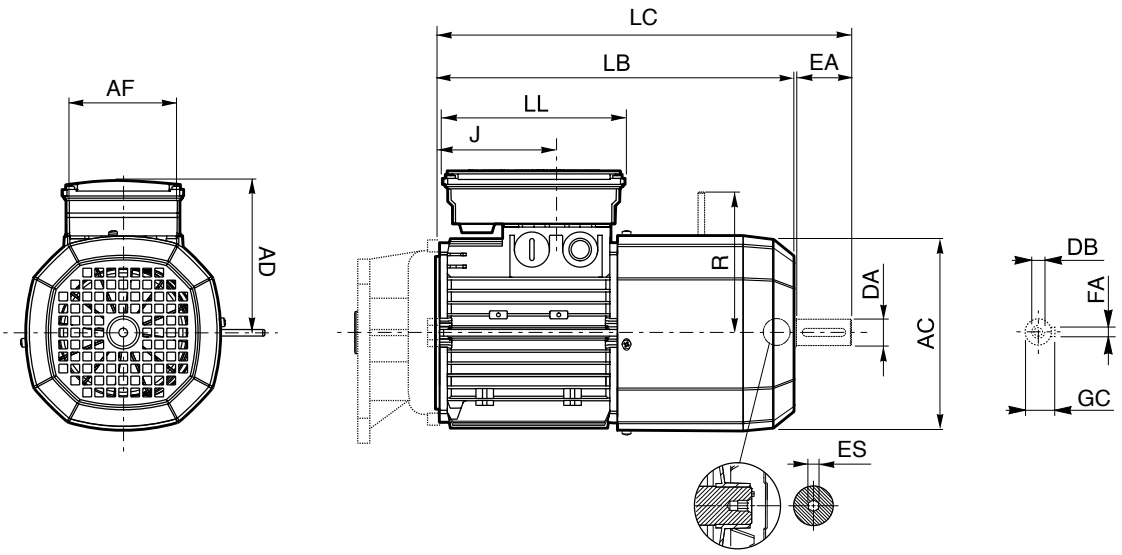

	Rear shaft end					Motor								
	DA	**EA**	**DB**	**FA**	**GC**	**AC**	**LB**	**LC**	**AF**	**LL**	**J**	**AD**	**R**	**ES**
M 05	11	23	M4	4	12.5	121	231	256	98	133	48	122	96	5
M 1	14	30	M5	5	16	138	248	280			73	135	103	
M 2 S	19	40	M6	6	21.5	156	272	314			88	146	129	
M 3 S	28	60	M10	8	31	195	326	389	110	165	124.5	158	160	6
M 3 L							353	416						
M 4	38	80	M12	10	41	258	470	553	140	188	185.5	210	204 (1)	
M 4 LC							495	578			64.5		226	
M 5 S						310	558	642	187	187	77	245	266	—
M 5 L							602	686						

[mm]

NOTE:
1) For FD07 brake value R=226.

ES hexagon is not supplied with PS option.

M - FD

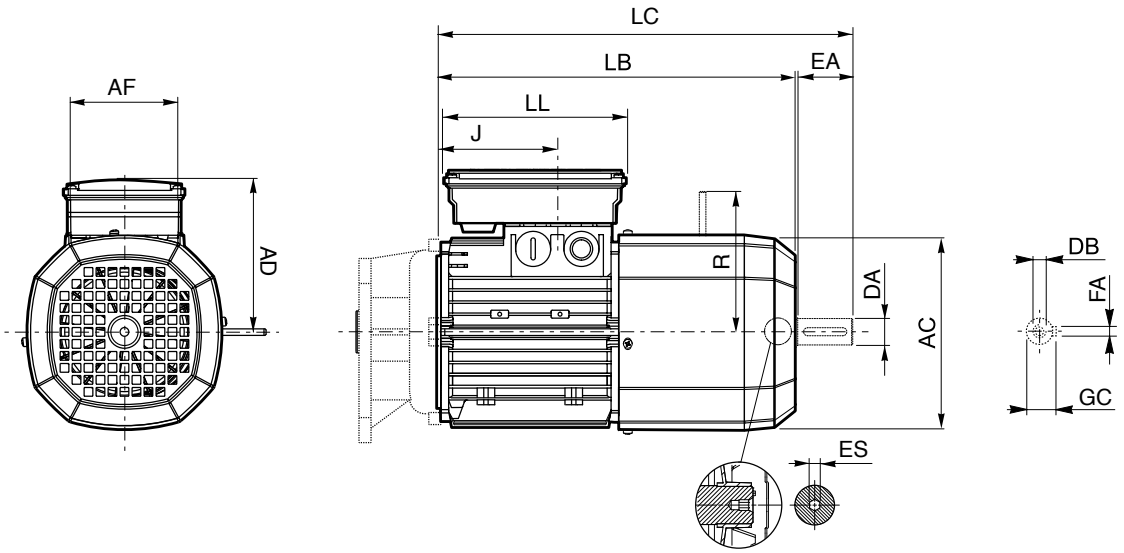

Dimensions are in Inch except when shown in *italic [mm]*

	Rear shaft end					Motor								
	DA	**EA**	**DB**	**FA**	**GC**	**AC**	**LB**	**LC**	**AF**	**LL**	**J**	**AD**	**R**	**ES**
M 05	0.433	0.906	*M4*	0.157	0.492	4.764	9.094	10.079	3.858	5.236	1.890	4.803	3.780	0.197
M 1	0.551	1.181	*M5*	0.197	0.630	5.433	9.764	11.024			2.874	5.315	4.055	
M 2 S	0.748	1.575	*M6*	0.236	0.846	6.142	10.709	12.362			3.465	5.748	5.079	
M 3 S	1.102	2.362	*M10*	0.315	1.220	7.677	12.835	15.315	4.331	6.496	4.902	6.220	6.299	0.236
M 3 L							13.898	16.378						
M 4	1.496	3.150	*M12*	0.394	1.614	10.157	18.504	21.772	5.512	7.402	7.303	8.268	8.031[(1)]	
M 4 LC							19.488	22.756			2.539		8.898	
M 5 S						12.205	21.969	25.276	7.362	7.362	3.031	9.646	10.472	—
M 5 L							23.701	27.008						

NOTE:
1) For FD07 brake value R=226.

ES hexagon is not supplied with PS option.

INDEX OF REVISIONS

BR_CAT_CAFS_IE2-IE3_ENG_R14_0	
	**Description**
	Minor modification on servoventilation variant section Added availability of BY electric motors Minor corrections on dimensions and rating charts Elimination of FA brakes due to phase out Updated motor normative section

2026 11 02

This publication supersedes and replaces any previous edition and revision. We reserve the right to implement modifications without notice. This catalogue cannot be reproduced, even partially, without prior consent.

Conversion table for commonly used metric - imperial units

Length

1 in	= 25.40 mm	= 0.0254 m
1 ft	= 304.8 mm	= 0.3048 m
1yd	= 914.4 mm	= 0.9144 m

Area

1 in^2	= 645.16 mm^2	= 0.645x10^{-3} m^2
1 ft^2	= 92.9x10^3 mm^2	= 92.9x10^3 m^2
1yd^2	= 836x10^3 mm^2	= 0.8361 m^2

Volume

1 in^3	= 16.4x10^{-3} dm^3	= 16.4x10^{-6} m^3
1 ft^3	= 28.32 dm^3	= 28.3x10^{-3} m^3

Force - Weight

1 lbm	= 2.2046 kg
1 lbf	= 4.4482 N

Torque

1 lb in	= 0.1129 Nm
1 lb ft	= 1.3558 Nm

Power

1 hp	= 0.7457 kW

Moment of inertia

1 lb ft^2	= 4.214x10^{-2} kg m^2
1 lb in s^2	= 1.12985x10^{-1} kg m^2
1 lb ft s^2	= 1.35582 kg m^2

Pressure - stress

1 lb/in^2	= 6.89x10^{-3} N/mm^2
1 lb/ft^2	= 47.88 N/m^2

Temperature

t [°F] $= \frac{5}{9}$ x [t − 32] [°C]

T [°C] $= \left(\frac{5}{9} \text{ x T} + 32\right)$ [°F]

Bonfiglioli global locations

AUSTRALIA
Bonfiglioli Transmission (Aust.) Pty Ltd
Plumpton NSW

BRAZIL
Bonfiglioli Redutores do Brasil Ltda
São Bernardo do Campo - São Paulo

CHINA
Bonfiglioli Drives (Shanghai) Co. Ltd.
Shanghai

Selcom Electronics (Shanghai) Co., Ltd
Shanghai

Shanghai

FRANCE
Bonfiglioli Transmission S.A.S.
Marly la Ville

GERMANY
Bonfiglioli Deutschland GmbH
Neuss

Bonfiglioli Deutschland GmbH
Krefeld

O&K Antriebstechnik GmbH
Hattingen

INDIA
Bonfiglioli Transmission Ltd.
Mobility & Wind Industries
Thirumudivakkam
Kancheepuram - Tamil Nadu

Industry & Automation Solutions
Mannur Village, Sriperumbudur Taluk
Kancheepuram - Tamil Nadu

Industry & Automation Solutions
Pune - Maharashtra

ITALY
Bonfiglioli Riduttori S.p.A.
Industry & Automation Solutions
Calderara di Reno (BO)

Industry & Automation Solutions
Carpiano

Mobility & Wind Industries
Forlì

Industry & Automation Solutions
Rovereto

Selcom Group S.p.A.
Castel Maggiore (BO)

Castel Maggiore (BO)

Cadriano (BO)

NEW ZEALAND
Bonfiglioli Transmission (Aust.) Pty Ltd
Auckland - Ellerslie

SINGAPORE
Bonfiglioli South East Asia Pte Ltd
Singapore

SLOVAKIA
Bonfiglioli Slovakia s.r.o.
Považská Bystrica

SOUTH AFRICA
Bonfiglioli South Africa Pty Ltd.
Johannesburg

SOUTH KOREA
Bonfiglioli Korea Co., Ltd.
Busan

SPAIN
Tecnotrans Bonfiglioli S.A
Castellbisbal - Barcelona

TURKEY
Bonfiglioli Türkiye Jsc
Çiğli - Izmir

UNITED KINGDOM
Bonfiglioli UK Ltd.
Warrington - Cheshire

USA
Bonfiglioli USA Inc.
Hebron - Kentucky

VIETNAM
Bonfiglioli Vietnam Co. Ltd.
Ben Cat city, Binh Duong province

PRODUCTION ASSEMBLY SALES SERVICE

Bonfiglioli

We have a relentless commitment to excellence, innovation & sustainability. Our team creates, distributes and services world-class power transmission & drive solutions to keep the world in motion.

HEADQUARTERS

Bonfiglioli S.p.A.
Via Cav. Clementino Bonfiglioli, 1
40012 Calderara di Reno - Bologna (Italy)
Tel. +39 051 6473111