TRANSFLUID

CERTIFIED ISO 9001

TRANSFLUID®
industrial & marine

K - CK - CCK
FLUID COUPLINGS

drive with us

INDICE

DESCRIPTION	pag.	2
PERFORMANCE CURVES		3
STARTING TORQUE CHARACTERISTICS		4
ADVANTAGES		5
STANDARD OR REVERSE MOUNTING		6
PRODUCTION PROGRAM		7 ÷ 8
SPECIAL VERSION (ATEX)		8
SELECTION		9 ÷ 12
DIMENSIONS (IN LINE VERSION)		13 ÷ 23
CENTER OF GRAVITY AND MOMENT OF INERTIA		24
DIMENSIONS (PULLEY VERSIONS)		25 ÷ 26
SAFETY DEVICES		27 ÷ 29
OTHER TRANSFLUID PRODUCTS		30
SALES NETWORK		

1. DESCRIPTION

The TRANSFLUID coupling (K series) is a constant fill type, comprising of three main elements:
1 - driving impeller (pump) mounted on the input shaft.
2 - driven impeller (turbine) mounted on the output shaft.
3 - cover, flanged to the outer impeller, with an oil-tight seal.
The first two elements can work both as pump or turbine.

2. OPERATING CONDITIONS

The TRANSFLUID coupling is a hydrodynamic transmission. The impellers perform asva centrifugal pump and a hydraulic turbine. With an input drive to the pump (e.g. electric motor or Diesel engine) kinetic energy is transferred to the oil in the coupling. The oil is forced, by centrifugal force, across the blades of the pump towards the outside of the coupling.
The turbine absorbs kinetic energy and generates a torque that is always equal to the input torque, thus causing rotation of the output shaft. Since there are no mechanical connections, the wear is practically zero.
The efficiency is influenced only by the speed difference (slip) between pump and turbine.

The slip is essential for the correct operation of the coupling - there could not be torque transmission without slip! The formula for slip, from which the power loss can be deduced is as follows:

$$\text{Slip \%} = \frac{\text{input speed - output speed}}{\text{input speed}} \times 100$$

In normal conditions (standard duty), slip can vary from 1,5% (large power applications) to 6% (small power applications).
TRANSFLUID couplings follow the laws of all centrifugal machines:

1 - transmitted torque is proportional to the square of input speed;
2 - transmitted power is proportional to the third power of input speed;
3 - transmitted power is proportional to the fifth power of circuit outside diameter.

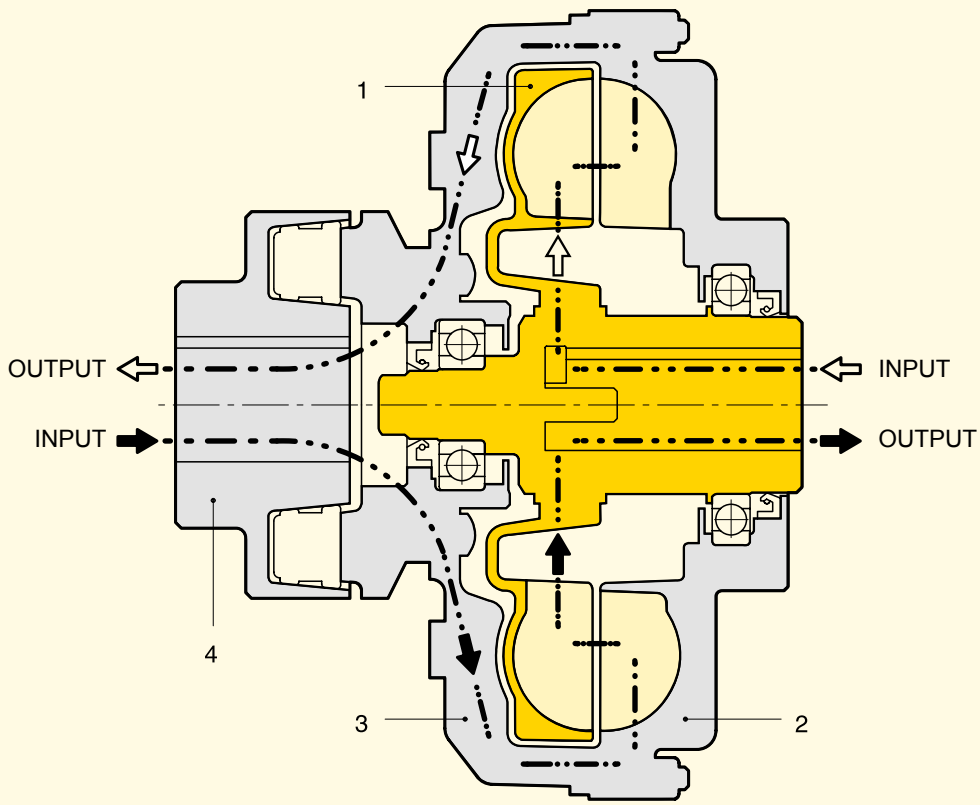

1 - INNER IMPELLER
2 - OUTER IMPELLER
3 - COVER
4 - FLEX COUPLING

2.1 Transfluid coupling fitted on electric motors

Three phase asynchronous squirrel cage motors are able to supply maximum torque only, near synchronous speed. Direct starting is the system utilized the most. Figure 1 illustrates the relationship between torque and current. It can be seen that the absorbed current is proportional to the torque only between 85% and 100% of the asynchronous speed.

Fig.**1**

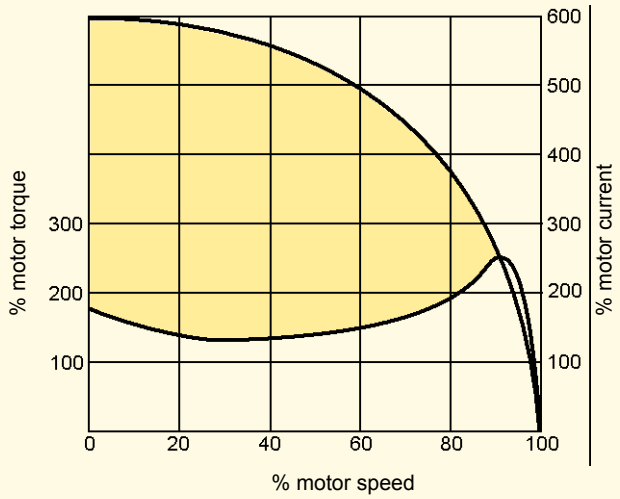

Any drive system using a Transfluid fluid coupling has the advantage of the motor starting essentially without load. Figure 2 compares the current demands of an electric motor when the load is directly attached versus the demand when a fluid coupling is mounted between the motor and load. The coloured area shows the energy that is lost, as heat, during start-up when a fluid coupling is not used. A Transfluid fluid coupling reduces the motor's current peak during start-up and also reduces the current losses, increasing the lifetime of electric motors. Also at start-up, a fluid coupling allows more torque to pass to the load for acceleration than in drive systems without a fluid coupling.

Fig.**3**

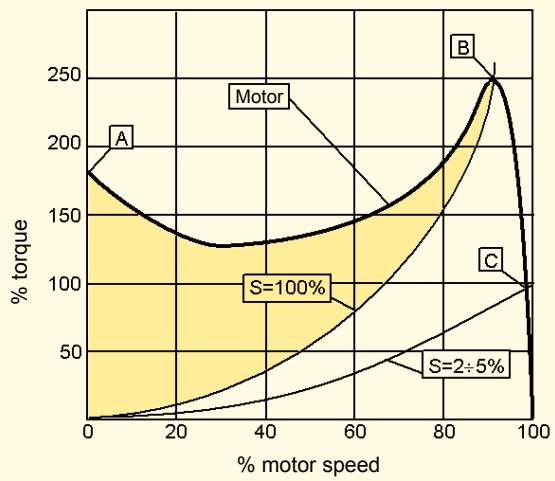

With a motor connected directly to the load there are the following disadvantages:

- The difference between available torque and the torque required by the load is very low until the rotor has accelerated to between 80-85% of the synchronous speed.
- The absorbed current is high (up to 6 times the nominal current) throughout the starting phase causing overheating of the windings, overloads in the electrical lines and, in cases of frequent starts, major production costs.
- Over-dimensioned motors caused by the limitations indicated above.

To limit the absorbed current of the motor during the acceleration of the load, a (λ Δ) (wye - delta) starting system is frequently used which reduces the absorbed current by about 1/3 during starting. Unfortunately, during operation of the motor under the delta configuration, the available torque is also reduced by 1/3;
and for machines with high inertias to accelerate, overdimensioning of the motor is still required. Finally, this system does not eliminate current peaks originating from the insertion or the commutation of the device.

Fig.**2**

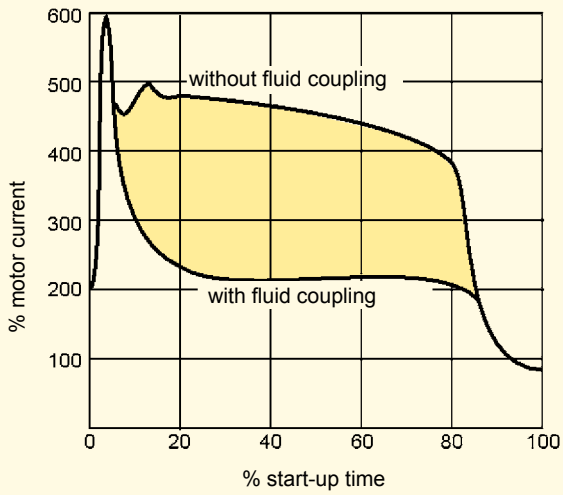

Figure 3 shows two curves for a single fluid coupling and a characteristic curve of an electric motor. It is obvious from the stall curve of the fluid coupling (s = 100%) and the available motor torque, how much torque is available to accelerate the rotor of the motor (colored area). In about 1 second, the rotor of the motor accelerates passing from point A to point B. The acceleration of the load, however, is made gradually by the fluid coupling, utilizing the motor in optimal conditions, along the part of the curve between point B, 100% and point C, 2-5%. Point C is the typical point of operation during normal running.

TRANSFLUID® industrial & marine

2.2 CHARACTERISTIC CURVES

Ml	: transmitted torque from fluid coupling
Mm	: starting torque of the electric motor
Mn	: nominal torque at full load
.....	: accelerating torque

K type
(standard circuit)

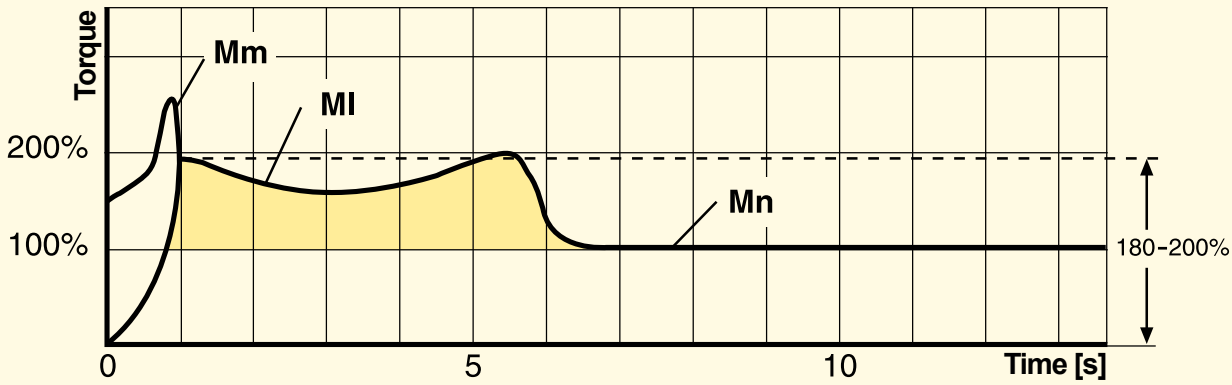

CK type
(circuit with a delayed chamber)

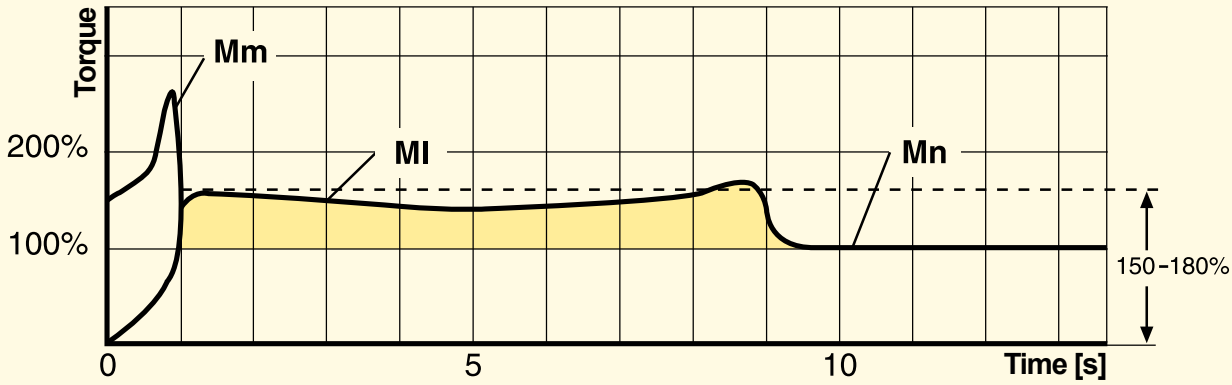

CCK type
(circuit with a double delayed chamber)

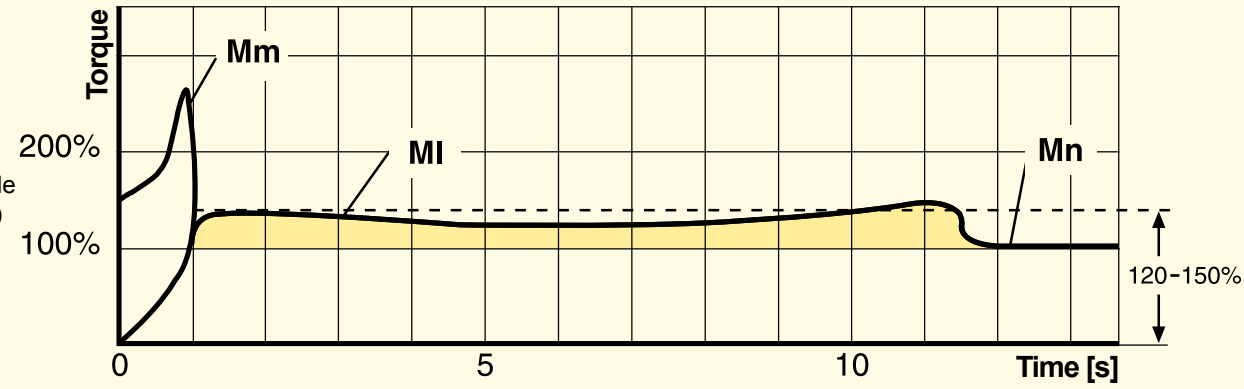

NOTE: Above starting times are indicative only

3. TRANSFLUID FLUID COUPLINGS WITH A DELAYED FILL CHAMBER

A l**ow starting torque** is achieved and with the standard circuit in a maximum oil fill condition because fluid couplings limit the torque **to less than 200%** of the nominal motor torque. It is possible to limit further the starting torque **down to 160%** of the nominal torque, by decreasing oil fill: however, this creates slip and working temperature increase in the fluid coupling.
The most convenient technical solution is to use fluid couplings with a **delayed fill chamber**, connected to the main circuit by **calibrated bleed orifices. These externally adjustable** valves, available from size **15CK** (Fig. **4b**), can be simply adjusted to vary starting time.
In a standstill position, the **delayed fill chamber** contains part of the filling oil, thus reducing the effective quantity in the working circuit (Fig. **4a**) and a **torque reduction** is obtained, allowing the motor to quickly reach the steady running speed **as if started without load**.
During start-up, oil flows from the **delayed fill chamber** to the main circuit (Fig. **4b**) in a quantity proportional to the rotating speed.
As soon as the fluid coupling reaches the nominal speed, all oil flows into the main circuit (Fig. **4c**) and torque is transmitted with a **minimum slip**.
With a **simple delayed fill chamber,** the ratio between starting and nominal torque may reach **150 %**. This ratio may be further reduced down to **120 %** with a **double delayed fill chamber**, which contains a higher oil quantity, to be progressively transferred into the main circuit during the starting phase.
This is ideal for very smooth start-ups with low torque absorptions, as typically required for machinery with large inertia values and for belt conveyors.
The advantages of the **delayed fill chamber** become more and more evident when the power to be transmitted increases.
The **simple chamber** is available from size **11CK**, while the **double chamber** from size **15CCK**.

3.1 SUMMARY OF THE ADVANTAGES GIVEN BY FLUID COUPLINGS

– very smooth start-ups
– reduction of current absorptions during the starting phase: the motor starts with very low load
– protection of the motor and the driven machine from jams and overloads use
– utilization of asynchronous squirrel cage motors instead of special motors with soft starter devices
– higher duration and operating convenience of the whole drive train, thanks to the protection function achieved by the fluid coupling
– higher energy saving, thanks to current peak reduction
– limited starting torque down to 120% in the versions with a double delayed fill chamber
– same torque at input and output: the motor can supply the maximum torque even when load is jammed
– torsional vibration absorption for internal combustion engines, thanks to the presence of a fluid as a power transmission element
– possibility to achieve a high number of start-ups, also with an inversion of the rotation direction
– load balancing in case of a double motor drive: fluid couplings automatically adjust load speed to the motors speed
– high efficiency
– minimum maintenance
– Viton rotating seals
– cast iron and steel material with anticorrosion treatment

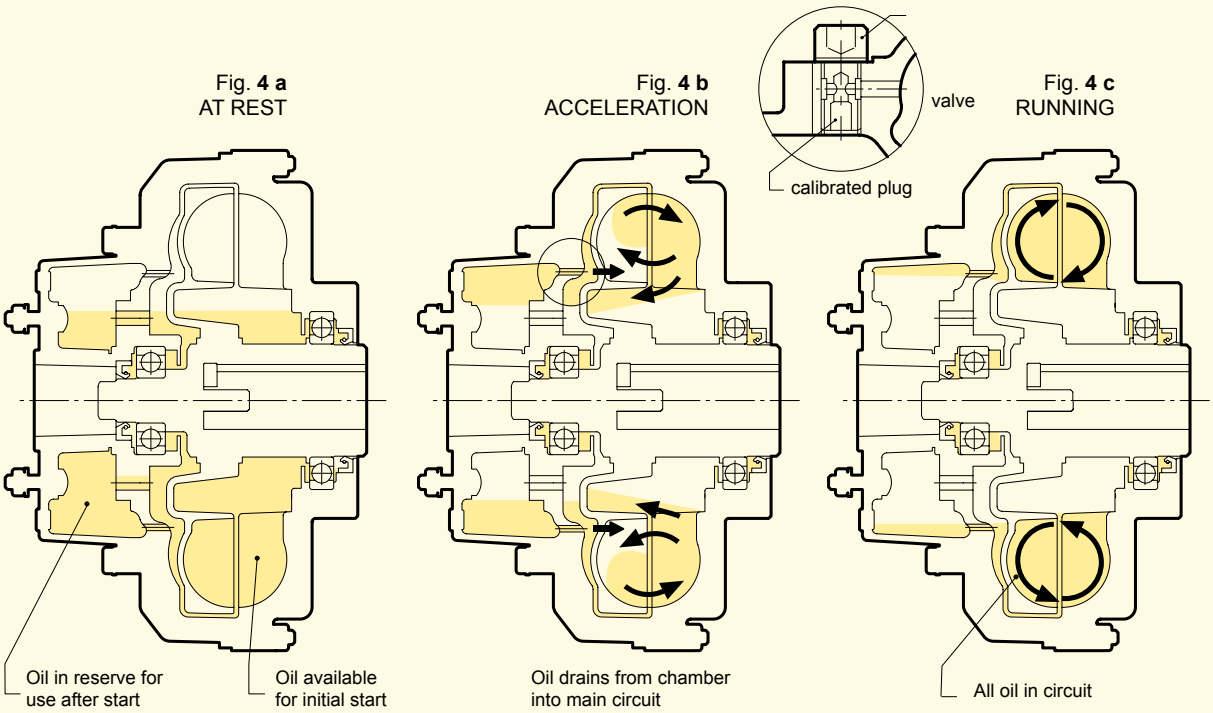

4. INSTALLATION

4.1 STANDARD MOUNTING
Driver **inner** impeller

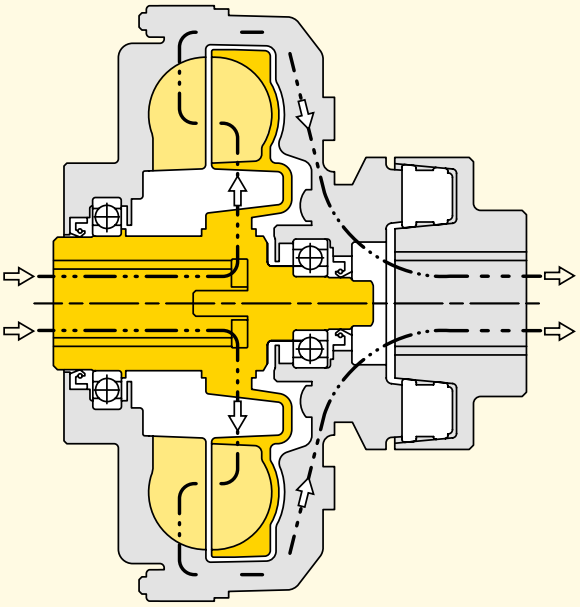

Minimum possible inertia is added to the motor, and therefore free to accelerate more quickly.

During the starting phase, the outer impeller gradually reaches the steady running condition. **For very long starting times, heat dissipation capacity is lower.**

If a braking system is required, it is **convenient and easy to install a brake drum or disc** on the flex coupling.

In some cases, where the driven machine cannot be rotated by hand, **maintenance procedures of oil checking and refilling**, as well as alignment, **become more difficult.**

The delayed fill chamber, when present, is fitted on the driven side. The rotating speed of the said chamber gradually increases during start-up, thus **leading to a longer starting time**, assuming the bleed orifices diameters are not changed. **If oil quantity is excessively reduced,** the transmissible torque may be lower than the starting torque of the driven machine. In such a case, part of the oil remains inside the delayed chamber. This lack of oil in the fluid coupling may cause stalling.

The **"switching pin" device might not work correctly** on machines where, owing to irregular operating conditions, the driven side may suddenly stop or jam during the starting phase.

Flex coupling is protected by the placement of the fluid coupling before it, and therefore this **configuration** is **fit for** applications with **frequent start-ups or inversions** of the rotating sense.

4.2 REVERSE MOUNTING
Driver **outer** impeller

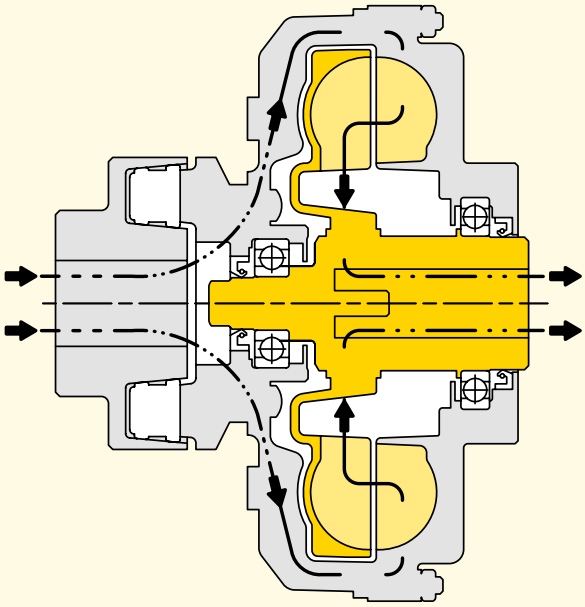

Higher inertia directly connected to the motor.

The outer impeller, being directly connected to the motor, reaches synchronous speed instantly. **Ventilation** is therefore **maximum** from the beginning.

The **assembly of a brake disc or drum** on KR fluid couplings is **more difficult, expensive** and leads to a longer axial length of the whole machine group.

The outer impeller and cover are connected to the motor, **it is** therefore **possible to manually rotate the coupling** to check alignment and oil level, and for refilling.

The delayed fill chamber is fitted on the driver side, and reaches the synchronous speed in a few seconds.
Oil is therefore centrifuged into the main circuit gradually and completely.
Starting time is adjustable by replacing the calibrated bleed orifices.
The starting phase, however **is performed in a shorter time** than in the configuration with an inner driver impeller.

The **switching pin operation is always assured**, where fitted, as the outer impeller always rotates because it is mounted on the driver shaft.

In case of frequent start-ups or inversions of the rotating direction, the **flex coupling is much more stressed**.

If not expressely required by the customer or needed for the application being performed, the fluid coupling is supplied according to our **"standard"** mounting. **Do specify** in your request for quotation **whether you need** a **"reverse" mounting**.

NOTE: Starting from size **13K** and **11CK** included, a baffle ring is always fitted on the driver impeller, and therefore it is not recommended to mount a fluid coupling **"reverse"** if **"standard"** mounting, or viceversa.
In these cases **contact TRANSFLUID** for more detailed information.

5. VERSIONS

KRG

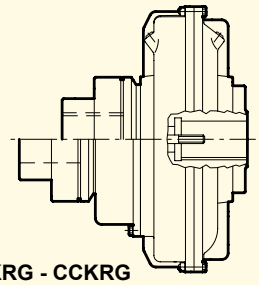

CKRG - CCKRG

KRG3

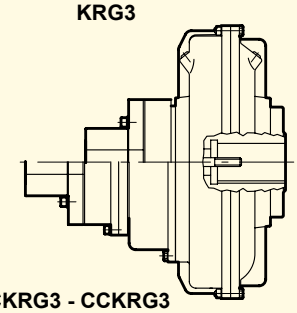

CKRG3 - CCKRG3

KRB

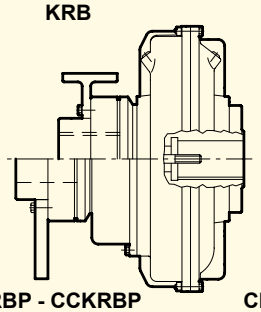

CKRBP - CCKRBP

KRB3

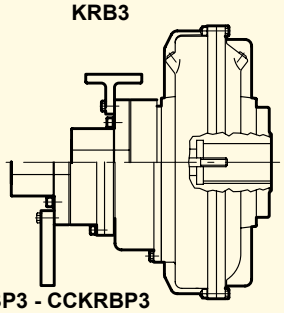

CKRBP3 - CCKRBP3

KRD

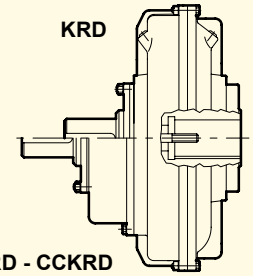

CKRD - CCKRD

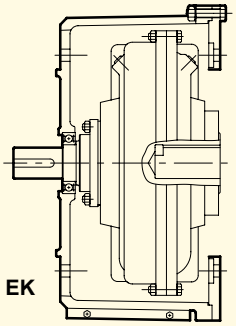

EK

KCG

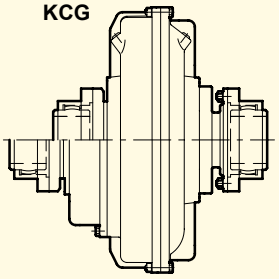

CKCG - CCKCG

KDM

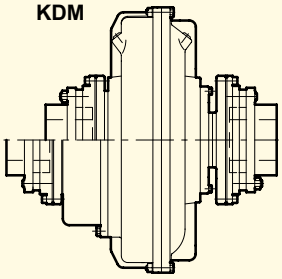

CKDM - CCKDM

KDMB

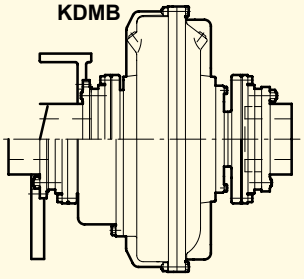

CKDMBP - CCKDMBP

5.1 IN LINE

KRG-CKRG-CCKRG : coupling with elastic coupling.

KRB-CKRB-CCKRB : KRG version, with brake drum **(...KRB)** or disc **(...KRBP)**.

KRD-CKRD-CCKRD : ...KR with output shaft. A flexible coupling has to be used; it is possible to place it (with a convenient housing) between the motor and a hollow shaft gearbox.

KRG3-CKRG3-CCKRG3 : version with elastic coupling allowing removal of rubber elements without moving the machines.

KRM-CKRM-CCKRM : coupling with clamp type, super elastic coupling.

EK : fluid coupling fitted with a bell housing, to be placed between a flanged electric motor and a hollow shaft gearbox.

KCG-CKCG-CCKCG : fluid coupling with gear couplings, also available with brake drum **(...KCGB)** or disc **(...KCGBP)**. : fluid coupling with disc couplings, also available with brake drum **(...KDMB)** or disc **(...KDMBP)**.

KDM-CKDM-CCKDM

N.B.: The ...KCG - ...KDM versions allow a radial disassembly without moving the motor or the driven machine.

5.1 PULLEY

KSD–CKSD–CCKSD : basic coupling foreseen for a flanged pulley, with simple (CK...) or double (CCK...) delayed fill chamber.

KSI-CKSI-CCKSI : fluid coupling with an incorporated pulley, which is fitted from inside.

KSDF-CKSDF-CCKS.. : KSD coupling with flanged pulley, externally mounted and therefore to be easily disassembled.

KSD

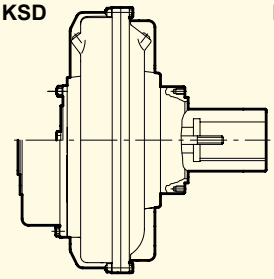

CKSD - CCKSD

KSI

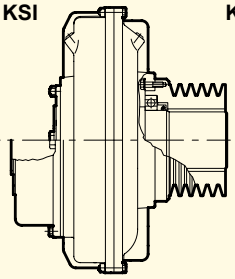

CKSI - CCKSI

KSDF

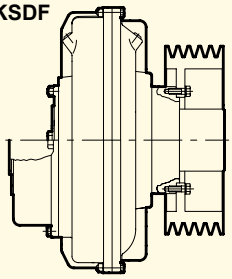

CKSDF - CCKSDF

6 MOUNTING

6.1 IN LINE VERSIONS MOUNTING EXAMPLES

Fig. **A** Horizontal axis between the motor and the driven machine (KRG-CKRG-CCKRG and similar).

Fig. **B** It allows a radial disassembly without moving the motor and the driven machine (KCG-KDM and similar).

Fig. **C** Between a flanged electric motor and a hollow shaft gearbox by means of a bell housing (...KRD and EK).

Fig. **D** Vertical axis mounting between the electric motor and a gearbox or driven machine.
In case of order, please specify mounting type 1 or 2.

Fig. **E** Between the motor and a upported pulley for high powers and heavy radial loads.

Fig. **A**

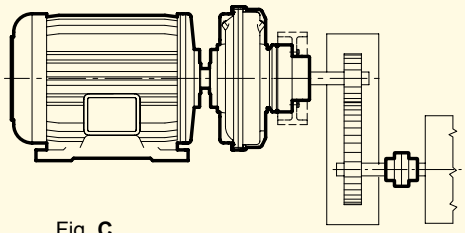

Fig. **B**

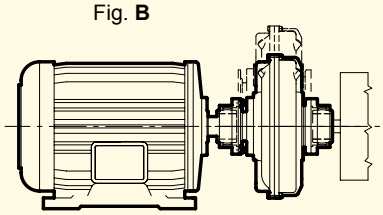

Fig. **C**

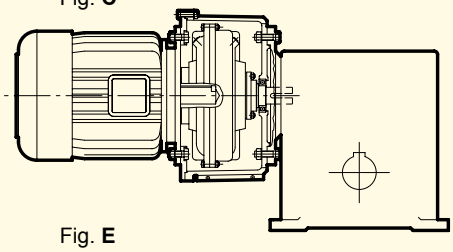

Fig. **D**

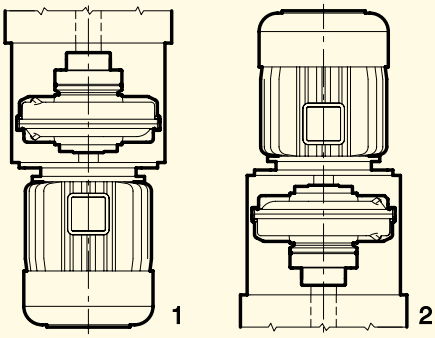

Fig. **E**

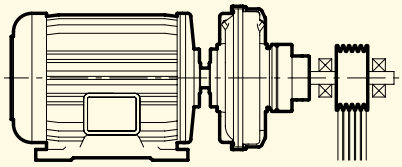

N.B. Version EK (fig. C) also for vertical mounting (fig. **D 1-2**)

6.2 PULLEY VERSIONS MOUNTING EXAMPLES

Fig. **F** Horizontal axis

Fig. **G** Vertical axis. **When ordering, please specify mounting type 1 or 2.**

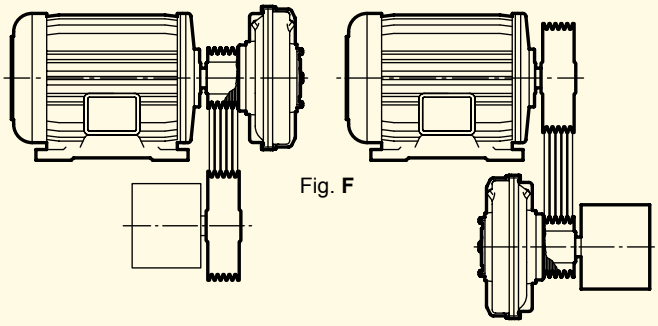

Fig. **F**

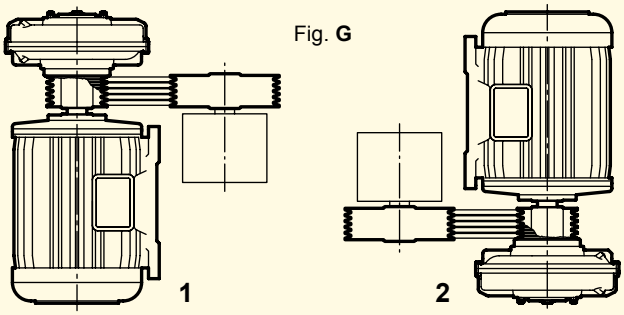

Fig. **G**

7 SPECIAL VERSION

7.1 ATEX

It is possible to get the Transfluid fluid couplings with finished bores certified as equipment for intended use in hazardous zones according to directive 2014/34/UE (Atex).
The selection of suitable Atex fluid coupling must consider an additional safety factor of 1.2 times the absorbed power (for instance, motor 132 kW @ 1500 rpm-absorbed power 120 kW x 1.2 = 144 kW power to be considered in the selection).
According to different categories, there is the suitable selected fluid coupling as per below table.

Fluid coupling model	Category 3 Ɛx II 3G Ex hIIC T4 Gc Ɛx II 3D Ex hIIIC T125°C Dc	Category 2 Ɛx II 2G Ex hIIC T4 Gb Ɛx II 2D Ex hIIIC T125°C Db	Category 1 Ɛx I M2 Ex h I Mb
...KRG	•	•	•
...KCG	•	•	
...KDM	•	•	•
...KXG	•	•	
...KXD	•	•	•
EK	•		
...KBM	•	•	
...KSD	•	• (water)	
Fluid fill	Oil or Treated water	Fire resistant oil Treated water	Treated water only

In case of inquiry for Atex fluid coupling, you have to apply Transfluid providing the application form TF 6413 duly filled up. About KXG and KXD couplings, please refer to catalogue 160 GB.

7.2 WATER FILL FLUID COUPLING

Transfluid has developed a version of water fill fluid coupling in order to meet the demands of environment friendly products as well as couplings suitable for working in hazardous zone and underground mines.

The water to be used is a mixture of water and glycole. The water fill couplings are available upon request on all design from size 13 upwards; they have the same overall dimensions of standard couplings series. **A suffix "W" identifies the coupling suitable for treated water operation (e.g. 27 CKRGW)**

7.3 LOW TEMPERATURE (below -20°C)

KDM - KCG - Special bearings
- Special seal fluid.

8 SELECTION

8.1 SELECTION CHART

The chart below may be used to select a unit size from the horse-power and input speed. If the selection point falls on a size limit line dividing one size from the other, it is advisable to select the larger size with a proportionally reduced oil fill.

Tab. **A**

GENERAL REFERENCE HORSE POWER CHART

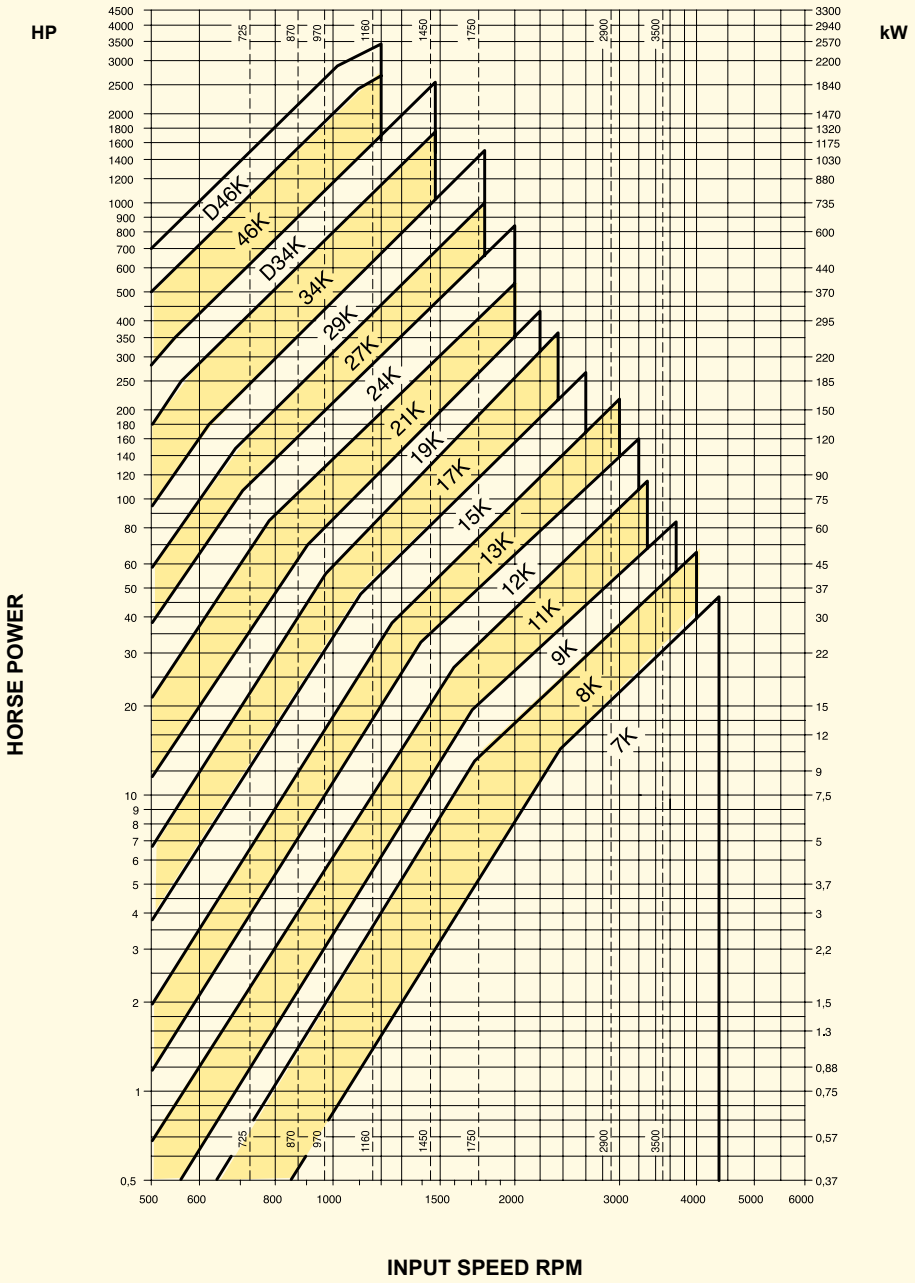

THE CURVES SHOW LIMIT CAPACITY OF COUPLING

TRANSFLUID® industrial & marine

8.2 SELECTION TABLE

Fluid coupling for standard electric motors.

Tab. **B**

MOTOR		3000 rpm			1800 rpm			1500 rpm			1200 rpm			1000 rpm		
TYPE	SHAFT DIA.	kW	HP	COUPLING	kW	HP	COUPLING	kW	HP	COUPLING	kW	HP	COUPLING	kW	HP	COUPLING
80	19	0.75	1	7 K	0.55	0.75	7 K	0.55	0.75	7 K	0.37	0.5	7 K	0.37	0.5	7 K
		1.1	1.5		0.75	1		0.75	1		0.55	0.75		0.55	0.75	
90S	24	1.5	2		1.1	1.5		1.1	1.5		0.75	1		0.75	1	8 K
90L	24	2.2	3		1.5	2		1.5	2		1.1	1.5	8 K	1.1	1.5	
100L	28	3	4		2.2	3		2.2	3		1.5	2		1.5	2	9 K
					3	4		3	4	8 K						
112M	28	4	5.5		4	5.5	8 K	4	5.5		2.2	3		2.2	3	11 K
132	38	5.5	7.5		5.5	7.5		5.5	7.5	9 K	3	4	9 K	3	4	
		7.5	10								4	5.5	11 K	4	5.5	
132M	38	7.5	10		7.5	10	9 K	7.5	10		5.5	7.5		5.5	7.5	12 K
160M	42	11	15	9 K	11	15		11	15	11 K	7.5	10	12 K	7.5	10	
		15	20													
160L	42	18.5	25		15	20	11 K	15	20		11	15		11	15	13 K
180M	48	22	30		18.5	25	12 K (11 K)	18.5	25	12 K	-	-	-	-	-	-
180L	48	-	-	-	22	30	12 K	22	30		15	20	13 K	15	20	15 K
200L	55	30	40	11 K	30	40	13 K (12 K)	30	40	13 K	18.5	25		18.5	25	
		37	50								22	30	15 K	22	30	
225S	60	-	-	-	37	50	13 K	37	50		-	-		-	-	-
225M	55(300) 60	45	60	11 K	45	60		45	60	15 K	30	40		30	40	17 K
250M	60 (3000) 65	55	75	13 K	55	75	15 K	55	75		37	50	17 K	37	50	19 K
280S	65 (3000) 75	75	100	13 K	75	100	17 K (15 K)	75	100	17 K	45	60		45	60	
280M	65 (3000) 75	90	125		90	125	17 K	90	125		55	75		55	75	21 K
315S	65 (3000) 80	110	150		110	150		110	150	19 K	75	100	19 K	75	100	
315M	65 (3000) 80	132	180		132	180	19 K	132	180		90	125	21 K	90	125	24 K
					160	220		160	220	21 K	110	150		110	150	
		160	220	-	200	270	21 K	200	270		132	180	24 K	132	180	
355S	80 (3000) 100	200	270	-	260	340		250	340	24 K	160	220		160	220	27 K
355M	80 (3000) 100	250	340	-	315	430	24 K	315	430		200	270		200	270	29 K
											250	340	27 K	250	340	

NON - STANDARD MOTORS

max.			max.			max.					
700	952	27 K	510	700	27 K	440	598	29 K	370	500	29 K
1000	1360	29 K	810	1100	29 K	800	1088	34 K	600	800	34 K
			1300	1740	34 K	1250	1700	D 34 K	880	1200	D 34 K
			1840	2500	D 34 K	2000	2700	46 K	1470	2000	46 K
						2500	3400	D 46 K	2000	2700	D 46 K

NB: THE FLUID COUPLING SIZE IS TIED TO THE MOTOR SHAFT DIMENSIONS

8.3 PERFORMANCE CALCULATIONS

For frequent starts or high inertia acceleration, it is necessary to first carry out the following calculations. For this purpose it is necessary to know:

Pm	- input power	kW
nm	- input speed	rpm
P_L	- power absorbed by the load at rated speed	kW
n_L	- speed of driven machine	rpm
J	- inertia of driven machine	kgm^2
T	- ambient temperature	°C

The preliminary selection will be made from the selection graph Tab. **A** depending upon input power and speed.
Then check:

A) acceleration time
B) max allowable temperature
C) max working cycles per hour

A) **Acceleration time** t_a :

$$t_a = \frac{n_u \cdot J_r}{9.55 \cdot M_a} \quad \text{(sec) where:}$$

n_u = coupling output speed (rpm)
J_r = inertia of driven machine feddered to coupling shaft (kgm^2)
M_a = acceleration torque (Nm)

$$n_u = n_m \cdot \left(\frac{100 - S}{100}\right)$$

where S is the percent slip derived from the characteristic curves of the coupling with respect to the absorbed torque M_L.

If S is not known accurately, the following assumptions may be made for initial calculations:
4 up to size 13”
3 from size 15” up to size 19”
2 for all larger sizes.

$$J_r = J \cdot \left(\frac{n_L}{n_u}\right)^2$$

Note: $J = \frac{PD^2}{4}$ or $\frac{GD^2}{4}$

$$M_a = 1.65\, M_m - M_L$$

where: $M_m = \frac{9550 \cdot P_m}{N_m}$ (Nominal Torque)

$M_L = \frac{9550 \cdot P_L}{N_u}$ (Absorbed Torque)

B) **Max allowable temperature.**

For simplicity of calculation, ignore the heat dissipated during acceleration.
Coupling temperature rise during start-up is given by:

$$T_a = \frac{Q}{C} \quad (°C)$$

where: Q = heat generated during acceleration (kcal)
C = total thermal capacity (metal and oil) of coupling selected from Tab. **C** (kcal/°C).

$$Q = \frac{n_u}{10^4} \cdot \left(\frac{J_r \cdot n_u}{76.5} + \frac{M_L \cdot t_a}{8}\right) \quad \text{(kcal)}$$

The final coupling temperature reached at the end of the acceleration cycle will be:

$$T_f = T + T_a + T_L \quad (°C)$$

where: T_f = final temperature (°C)
T = ambient temperature (°C)
T_a = temperature rise during acceleration (°C)
T_L = temperature during steady running (°C)

$$T_L = 2.4 \cdot \frac{P_L \cdot S}{K} \quad (°C)$$

where: K = factor from Tab. **D**
T_f = must not exceed 150°C

C) **Max working cycles per hour H**

In addition to the heat generated in the coupling by slip during steady running, heat is also generated (as calculated above) during the acceleration period. To allow time for this heat to be dissipated, one must not exceed the max allowable number of acceleration cycles per hour.

$$H\ max = \frac{3600}{t_a + t_L}$$

where t_L = minimum working time

$$t_L = 10^3 \cdot \frac{Q}{\left(\frac{t_a}{2} + T_L\right) \cdot K} \quad \text{(sec)}$$

8.4 CALCULATION EXAMPLE

Assuming: Pm = 20 kW nm = 1450 giri/min
PL = 12 kW n_L = 700 giri/min
J = 350 kgm²
T = 25 °C

Trasmission via belts.
From selection graph. on Tab. **A**, selected size is 12K.

A) **Acceleration time**

From curve Tf 5078-X (supplied on request) slip S = 4%

$$n_u = 1450 \cdot \left(\frac{100 - 4}{100}\right) = 1392 \text{ rpm}$$

$$J_r = 350 \cdot \left(\frac{700}{1392}\right)^2 = 88.5 \text{ kgm}^2$$

$$M_m = \frac{9550 \cdot 20}{1450} = 131 \text{ Nm}$$

$$M_L = \frac{9550 \cdot 12}{1392} = 82 \text{ Nm}$$

$$M_a = 1{,}65 \cdot 131 - 82 = 134 \text{ Nm}$$

$$t_a = \frac{1392 \cdot 88.5}{9.55 \cdot 134} = 96 \text{ sec}$$

B) **Max allowable temperature**

$$Q = \frac{1392}{10^4} \cdot \left(\frac{88.5 \cdot 1392}{76.5} + \frac{82 \cdot 96}{8}\right) = 361 \text{ kcal}$$

C = 4.2 kcal/°C (Tab.**C**)

$$T_a = \frac{361}{4.2} = 86 \text{ °C}$$

K = 8.9 (Tab. **D**)

$$T_L = 2.4 \cdot \frac{12 \cdot 4}{8.9} = 13 \text{ °C}$$

$$T_f = 25 + 86 + 13 = 124 \text{ °C}$$

C) **Max working cycles per hour**

$$t_L = 10^3 \cdot \frac{361}{\left(\frac{86}{2} + 13\right) \cdot 8.9} = 724 \text{ sec}$$

$$H = \frac{3600}{96 + 724} = 4 \text{ starts per hour}$$

Tab. **C**
THERMAL CAPACITY

size	K kcal/°C	CK kcal/°C	CCK kcal/°C
7	1.2	-	-
8	1.5		
9	2.5		
11	3.2	3.7	
12	4.2	5	
13	6	6.8	
15	9	10	10.3
17	12.8	14.6	15.8
19	15.4	17.3	19.4
21	21.8	25.4	27.5
24	29	32	33.8
27	43	50	53.9
29	56	63	66.6
34	92	99	101
D34	138	-	-
46	-	-	175
D46	332	-	-

Tab. **D**
FACTOR K

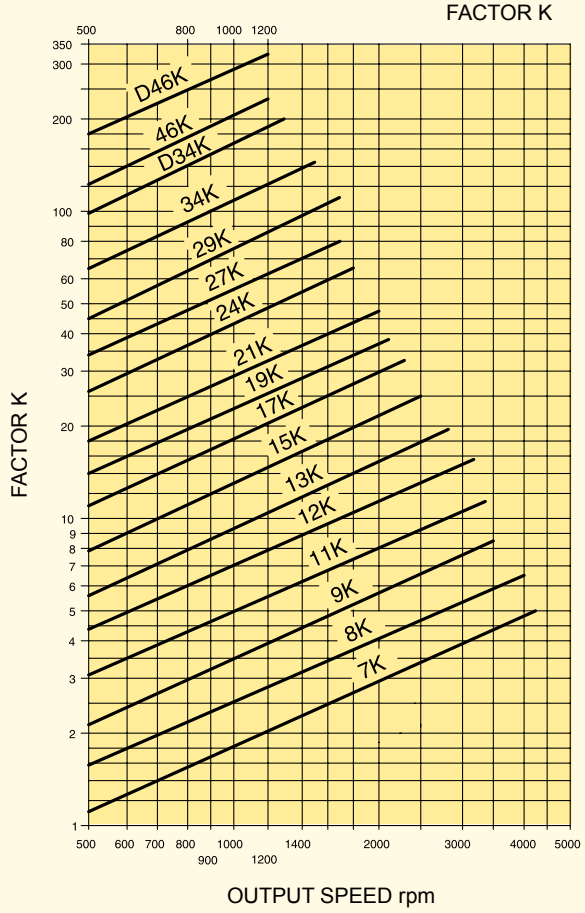

9. DIMENSION

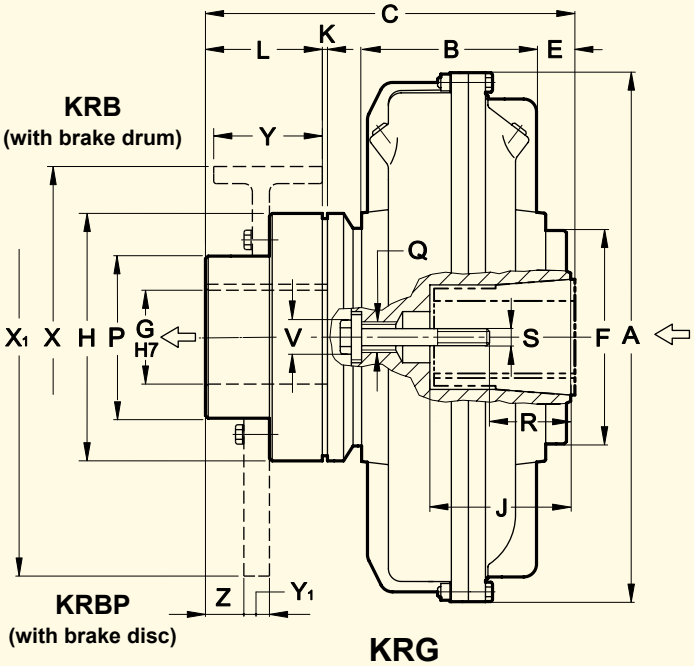

KRG

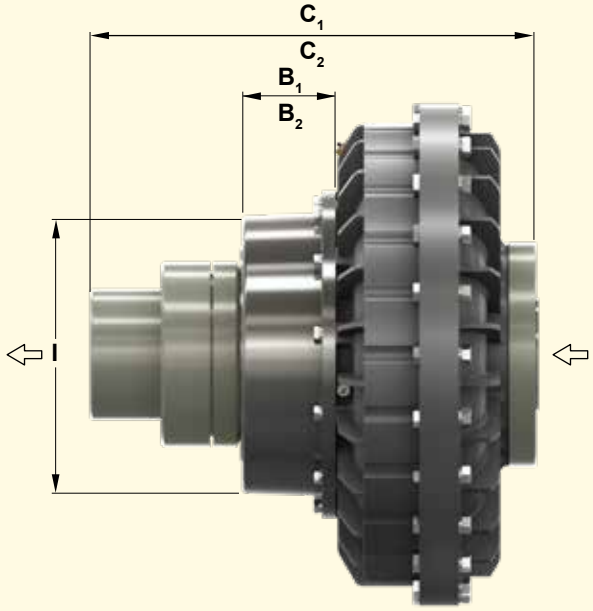

CKRG - CCKRG

taper bush

In case of installation on shafts without shoulders, please contact Transfluid

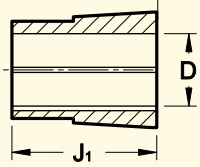

cylindrical bore

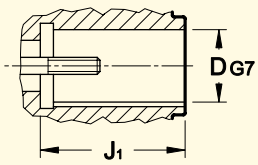

DIMENSIONS ARE SUBJECT TO ALTERNATION WITHOUT NOTICE

Dimensions

Size	D		J	J_1		A	B KR...	B_1 CKR...	B_2 CCKR...	C KRG	C_1 CKRG	C_2 CCKRG	E	F	G max	H	I	K	L	P	Q	R		S		V	Z	Flex coupling	brake drum X - Y	brake disc X_1 - Y_1	Weight kg (without oil) KRG	CKRG	CCKRG	Oil max (l) KRG	CKRG	CCKRG
7	19	24	69	40	50	228	77	-	-	189	-	-	22	114	42	110	-	2	60	70	M12	27	35	M6	M8	21	-	BT 10	160 - 60	on request	8.3	-	-	0.92	-	-
	28			60																		40		M10												
8	24			50		256	91			194			18									36		M8							8.7			1.5		
	28			60																		41		M10												
9	28	38	111	60	80	295	96			246			31	128	55	132			80	85	M20	43	54	M10	M12	27		BT 20	160 - 60 200 - 75		16			1.95		
	42•••	48••		80	110																	79		M16												
11	28	38		60	80	325	107	68.5		255	301		27				195					42	56	M10	M12						18	20.5		2.75	3.35	
	42•••	48••		80	110																	83		M16												
12	28	38		60	80	372	122	75			322		24	145			224					42	56	M10	M12						21.5	24.5		4.1	4.8	
	42•••	48••		80	110																	83		M16												
13	42	48	143	110		398	137			285	345		28	177	70	170				100		84		M16		34	5	BT 30	200 - 75 250 - 95	400 - 30 450 - 30	34	37		5.2	5.8	
	55•••	60•••		110	58.5																	74	104	M20												
15	48	55	145	110		460	151	87	137	343	411	461	35	206	80		259		110	120		80	70	M16	M20		35	BT40	250 - 95 315 - 118	400 - 30 450 - 30	50.3	54.3	62	7.65	8.6	9.3
	60	65•••		140																		100		M20												
17	48	55	145	110		520	170	96	176	362	442	522	37	225	90	250	337	3	110	135	M27	80		M16	M20	34	15	BT 50	315 - 118 400 - 150	445 - 30 450 - 30	77	83	92	11.7	13.6	14.9
	60	65•••		140																		103		M20												
	75•	80•	-	140	170																	103	133													
19	48	55	145	110		565	177						30									80		M16	M20						83	90	99	14.2	16.5	18.5
	60	65•••		140																		103		M20												
	75•	80•	-	140	170																	103	133													

– D BORES RELATIVE TO TAPER BUSHES WITH A KEYWAY ACCORDING TO ISO 773 - DIN 6885/1
PARTICULAR CASES:
• CYLINDRICAL BORE WITHOUT TAPER BUSH WITH A KEYWAY ISO 773 - DIN 6885/1
•• CYLINDRICAL BORE WITHOUT TAPER BUSH, WITH A REDUCED KEYWAY (DIN 6885/2)
••• TAPER BUSH WITHOUT KEYWAY
– FOR ...KRB - KRBP SERIES SPECIFY X AND Y OR X1 AND Y1 DIAMETER
EXAMPLE: 9KRB - D38 - BRAKE DRUM = 160x60

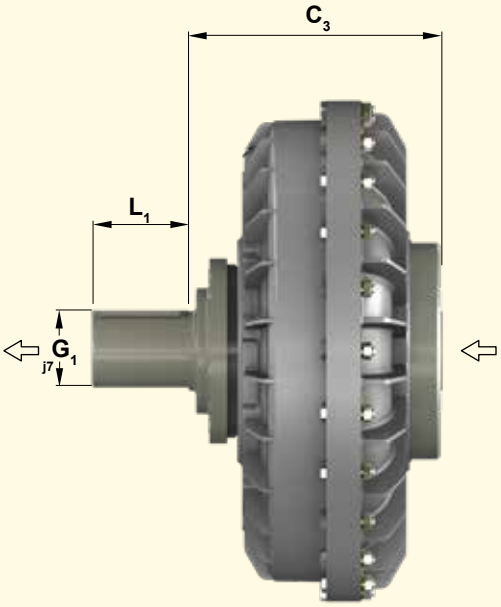

KRD

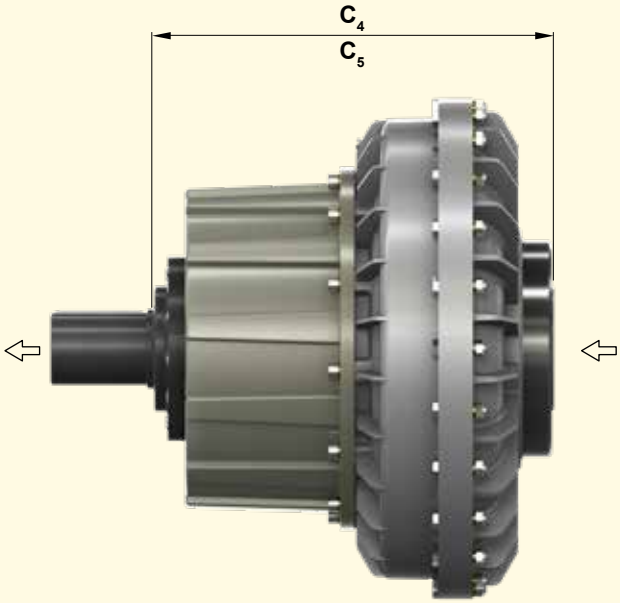

CKRD - CCKRD

NB: The arrows ⇦ indicate input and output in the standard versions.

Dimensions

Size	C_3 KRD	C_4 CKRD	C_5 CCKRD	G_1	L_1	Weight kg (without oil) KRD	CKRD	CCKRD
7	138	-	-	28	40	5.7	-	-
8	138					6.1		
9	176			38	50	11.6		
11	185	231		42		13	15.5	
12		252				16.7	19.7	
13	212	272		48	60	26.3	29.3	
15	230	298	348	60	80	40.4	44.4	52.1
17	236	343	423	75	100	58.1	64.1	73.1
19						65.1	71.1	80.1

– WHEN ORDERING, SPECIFY: SIZE - MODEL - **D** DIAMETER
– UPON REQUEST: BORE **G** MACHINED; **G**1 SPECIAL SHAFT
– **G**1 SHAFT WITH A KEYWAY ACCORDING TO ISO 773 - DIN 6885/1

DIMENSIONS ARE SUBJECT TO ALTERATION WITHOUT NOTICE

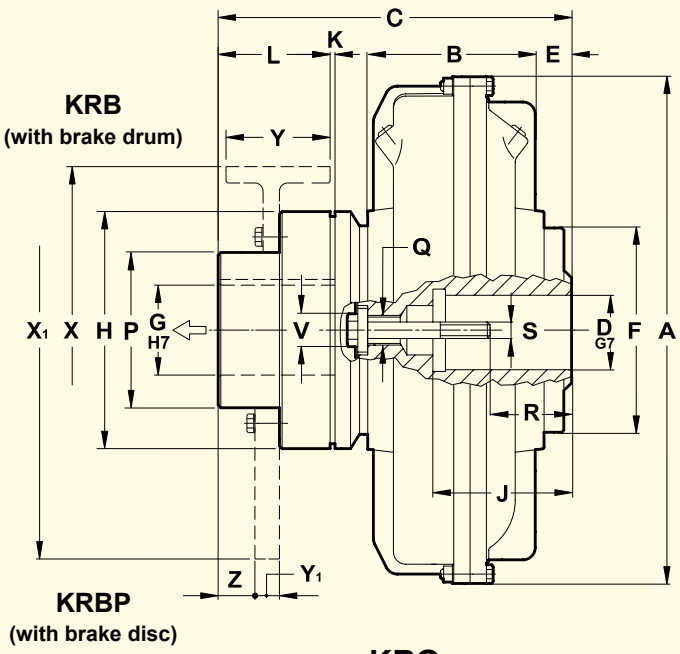

KRG

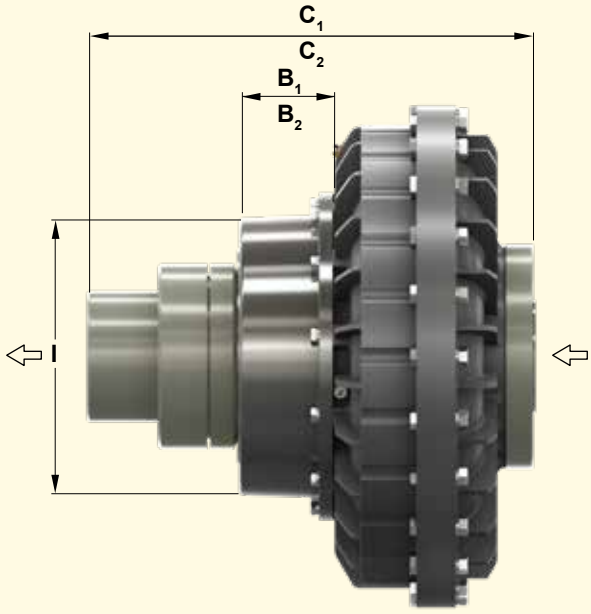

CKRG - CCKRG

cylindrical bore

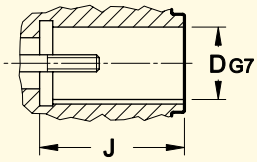

NB: The arrows ⇦ indicate input and output in the standard versions.

⇨ Dimensions

Size ⇩	D	J	A	B KR...	B_1 CKR...	B_2 CCKR...	C KR...	C_1 CKR...	C_2 CCKR...	E	F	G	H	I	K	L	P	Q	R	S	V	Z	Flex coupling	Brake drum X - Y	Brake disc X_1 - Y_1	Weight kg (without oil) KRG	CKRG	CCKRG	Oil max l KRG	CKRG	CCKRG
21	•80 90	170	620	188	110	199	433	533	623	62	250	110	290	400	3	140	170	M36	130	M20 M24	40	45	BT60	400 - 150 500 - 190	560 - 30 630 - 30 710 - 30 795 - 30	129	139	147	19	23	31
	••100	210					468	568	658	97									165	M24											
24	•80 90	170	714	212			433	533	623	38									130	M20 M24						147	157	165	40	31.2	39
	••100	210					468	568	658	73									165	M24											
27	120 max	210 max	780	278	131	231	484	602	702	15	315	130	354	537	4	150	200	M45	167 (for max bore)	M24	-	20	BT80	500 - 190	710 - 30 795 - 30	228	246	265	42	50	61
29	135 max	240 max	860	295			513	631	731	18	350								167 (for max bore)	M24	-					281	299	309	55	63	73
34	150 max	265 max	1000	368			638	749	849	19	400	140	395		5	170	220		200 (for max bore)	M36	-	18	BT90	630 - 236	1000 - 30	472	482	496	82.5	92.5	101

– D BORES WITH A KEYWAY ACCORDING TO ISO 773 - DIN 6885/1
• STANDARD DIMENSIONS WITH A KEYWAY ISO 773 - DIN 6885/1
•• STANDARD DIMENSIONS WITH REDUCED KEYWAY (DIN 6885/2)
– WHEN ORDERING, SPECIFY: SIZE - MODEL- D DIAMETER.
FOR ...KRB OR ...KRBP, SPECIFY X AND Y OR X1 AND Y1 DIMENSIONS BRAKE DRUM OR DISC
– UPON REQUEST, G FINISHED BORE
EXAMPLE: 19KRBP - D80 - BRAKE DISC 450 x 30

DIMENSIONS ARE SUBJECT TO ALTERATION WITHOUT NOTICE

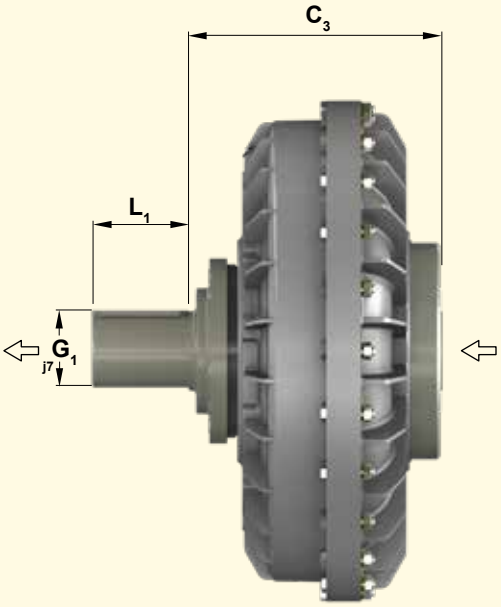

KRD

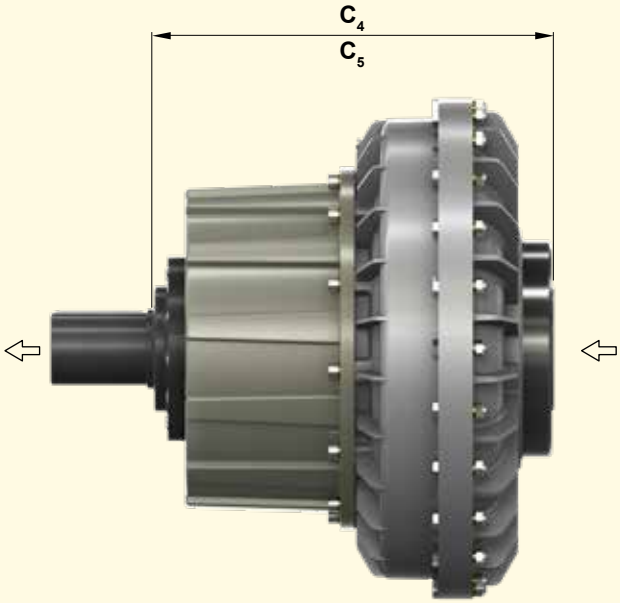

CKRD - CCKRD

NB: The arrows ⇦ indicate input and output in the standard versions.

Dimensions

Size	C_3 KRD	C_4 CKRD	C_5 CCKRD	G_1	L_1	Weight kg (without oil) KRD	CKRD	CCKRD
21	292	392	482	90	120	99.5	109.5	117.5
	327*	427*	517*					
24	292	392	482			117.5	127.5	135.5
	327*	427*	517*					
27	333	451	551	100	140	178	186	215
29	362	480	580			231	249	259
34	437	568	668	140	150	358	373	383

* Total lenght with D100
– UPON REQUEST G_1 SPECIAL SHAFT DIAMETER

DIMENSIONS ARE SUBJECT TO ALTERATION WITHOUT NOTICE

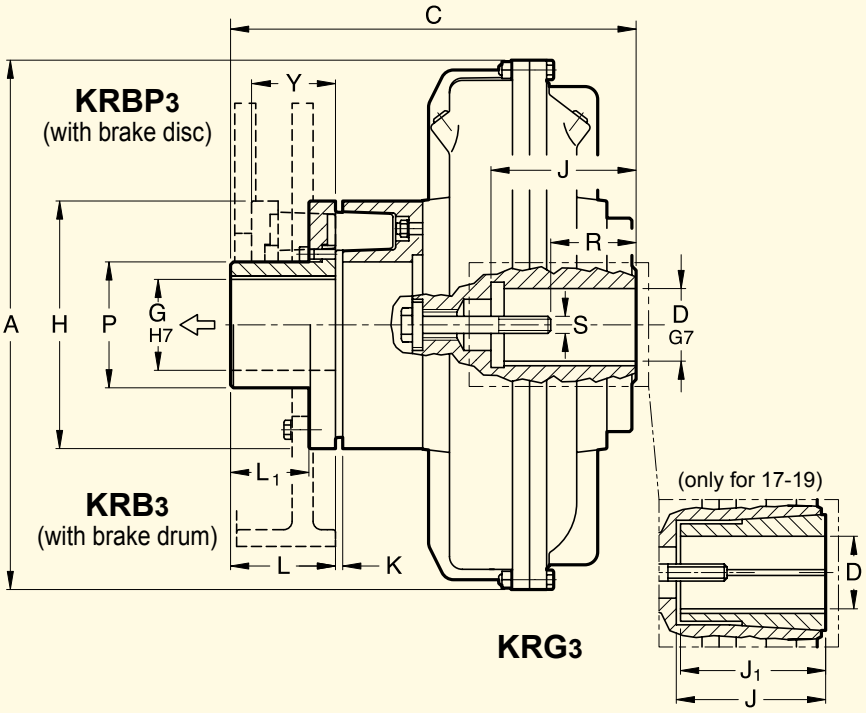

KRG3

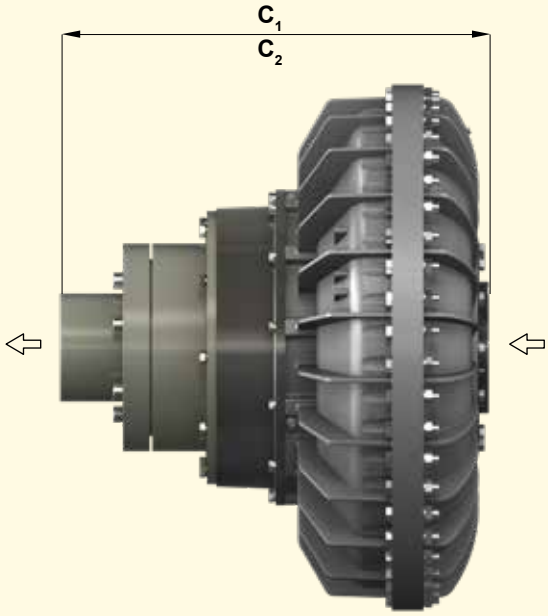

CKRG3 - CCKRG3

The three pieces flexible coupling **B3T** allows the removal of the elastic elements (rubber blocks), without removal of the electric motor; only with the ...**KRB3** (with brake drum) coupling the electric motor must be moved by the value of **'Y'**.
'Y' = axial displacement male part of the coupling **B3T** necessary for the removal of the elastic elements.

Dimensions

Size	D		J	J_1	A	C	C_1	C_2	G	H	K	L	L_1	P	R		S		Y	Elastic coupling	Weight kg (without oil) KRG3	CKRG3	CCKRG3
17	48	55	145	110	520	418	498	578	90	240	3	110	82	130	80		M16	M20	82	B3T-50	84	90	99
	60	65•••		140											103		M20						
	75•	80•	-	140 - 170											103	132							
19	48	55	145	110	565										80		M16	M20			91	97	106
	60	65•••		140											103		M20						
	75•	80•	-	140 - 170											103	132							

– D BORES RELEVANT TO TAPER BUSH WITH KEYWAY ACCORDING TO ISO773 - DIN6885/1
• STANDARD CYLINDRICAL BORES WITHOUT TAPER BUSH WITH KEYWAY ACCORDING TO ISO773 - DIN6885/1
••• TAPER BUSH WITHOUT KEYWAY

21	80•	90	170		620	457	557	647	110	290	3	140	78	150	130		M20	M24	82	B3T-60	134	144	152
	100••		210			492	592	682							165		M24						
24	80•	90	170		714	457	557	647							130		M20	M24			152	162	170
	100••		210			492	592	682							165		M24						
27	120 max		210	-	780	566	684	784	130	354	4	150	112	180	167		M24		120	B3T-80	247	265	284
29	135 max		240		860	595	713	813							for max hole						300	318	328
34	150 max		265		1000	704	815	915	150	395	5	170	119	205	200 for max hole		M36		151	B3T-90	505	481	491
46	180 max		320	-	1330	-	-	1092	180	490	7	195	138	270	190 for max hole		M36		122	B3T-100	-	-	1102

– D CYLINDRICAL BORES WITHOUT TAPER BUSH WITH KEYWAY ACCORDING TO ISO773 – DIN6885/1
• STANDARD DIMENSIONS
•• STANDARD DIMENSION WITH REDUCED KEYWAY (DIN 6885/2)
– ON ORDER FORM PLEASE SPECIFY: DIMENSION, MODEL, DIAMETER D - EXAMPLE: 21CCKRG3 - D80

DIMENSIONS ARE SUBJECT TO ALTERATION WITHOUT NOTICE

TRANSFLUID® industrial & marine

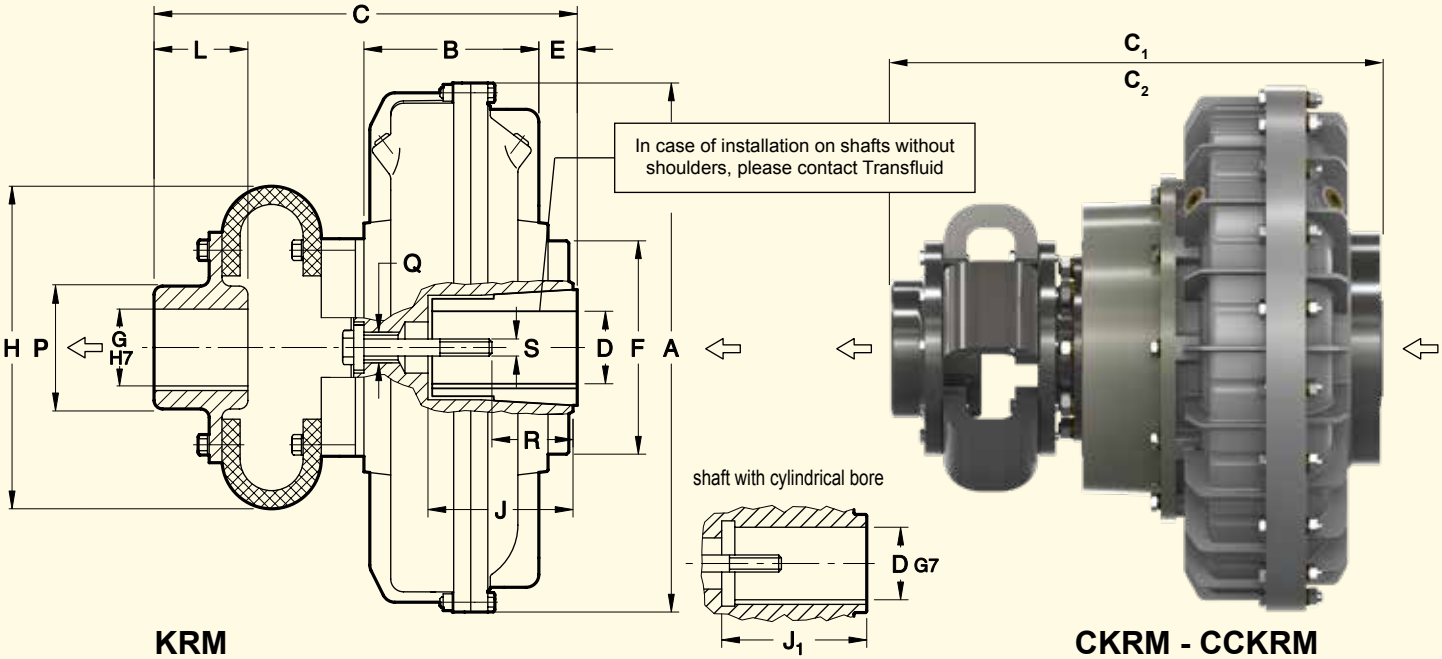

NB: The arrows ⇦ indicate input and output in the standard versions.

COUPLING ALLOWING HIGHER MISALIGNMENTS AND THE REPLACEMENT OF THE ELASTIC ELEMENTS WITHOUT MOVING THE MACHINES

⇨ Dimensions

TAPER BUSH VERSION

Size	D		J	J_1		A	B	C KRM	C_1 CKRM	C_2 CCKRM	E	F	G	H	L	P	Q	R		S		Elastic coupling	Weight kg (without oil) KRM	CKRM	CCKRM
9	28	38	111	60	80	295	96	276	-	-	31	128	50	185	50	80	M20	43	54	M10	M12	53 F	14.5	-	-
	42•••	-		80	-													79		M16					
11	28	38		60	80	325	107	285	331		27							42	56	M10	M12		16.5	19	
	42•••	48••		80	110													83		M16					
12	38			80		372	122		352		24	145						42	56	M12			20	23	
	42•••	48••		80	110													83		M16					
13	42	48	143	110		398	137	332	392		28	177	75	228	72	105	M27	84				55 F	33	36	
	55•••	60•••		110	58.5													74	104	M20					
15	48	55	145	110		460	151	367	435	485	35	206	80	235	80	112		80	70	M16	M20	56 F	48	52	59.7
	60	65•••		140														100		M20					
17	48	55	145	110		520	170	380	460	540	37	225	75	288	90	120		80		M16	M20	58 F	67	73	82
	60	65•••		140														103		M20					
	75•	80•	-	140	170													105	135						
19	48	55	145	110		565	177				30							80		M16	M20		74	80	89
	60	65•••		140														103		M20					
	75•	80•	-	140	170													105	135	M20					

– D BORES RELEVANT TO TAPER BUSH WITH KEYWAY ACCORDING TO ISO773 - DIN6885/1
• CYLINDRICAL BORES WITHOUT TAPER BUSH WITH KEYWAY ACCORDING TO ISO773 - DIN6885/1
•• CYLINDRICAL BORES WITHOUT TAPER BUSH WITH A REDUCED KEYWAY (DIN 6885/2)
••• TAPER BUSH WITHOUT KEYWAY

CYLINDRICAL BORE VERSION

21	80•	90	-	170		620	188	496	596	686	62	250	90	378	110	144	M36	130		M20	M24	65 F	124	134	142
	100••			210				531	631	721	97							165		M24					
24	80•	90		170		715	212	496	596	686	38							130		M20	M24		142	152	160
	100••			210				531	631	721	73							165		M24					
27	120 max			210		780	278	525	643	743	15	315	100	462	122	160	M45	167 (for max bore)		M24		66 F	211	229	248
29	135 max			240		860	295	577	659	795	18	350	120	530	145	192		167 (for max bore)		M24		68 F	293	311	321
34	150 max			265		1000	368	648	779	879	19	400	140	630	165	224		200 (for max bore)		M36		610 F	467	462	492

– D BORES WITH A KEYWAY ACCORDING TO ISO 773 - DIN 6885/1
• STANDARD DIMENSIONS WITH A KEYWAY ISO 773 - DIN 6885/1
•• STANDARD DIMENSIONS WITH REDUCED KEYWAY (DIN 6885/2)
– WHEN ORDERING, SPECIFY: SIZE - SERIE D DIAMETER - EXAMPLE: 13 CKRM-D 55

DIMENSIONS ARE SUBJECT TO ALTERATION WITHOUT NOTICE

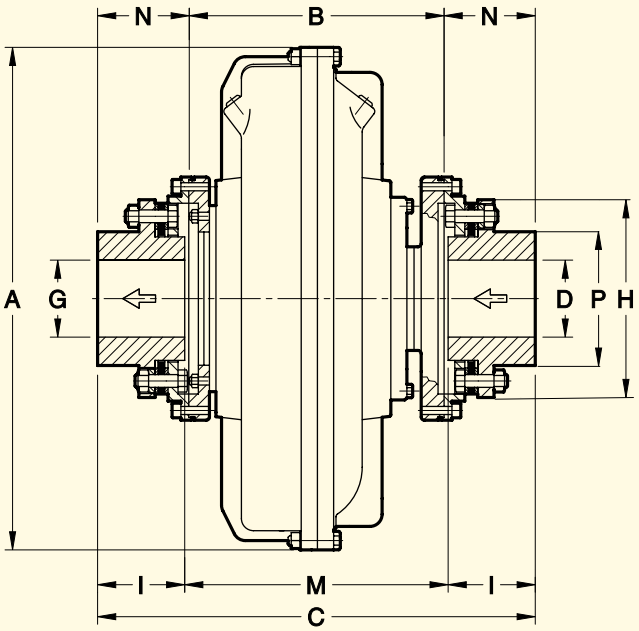

KDM

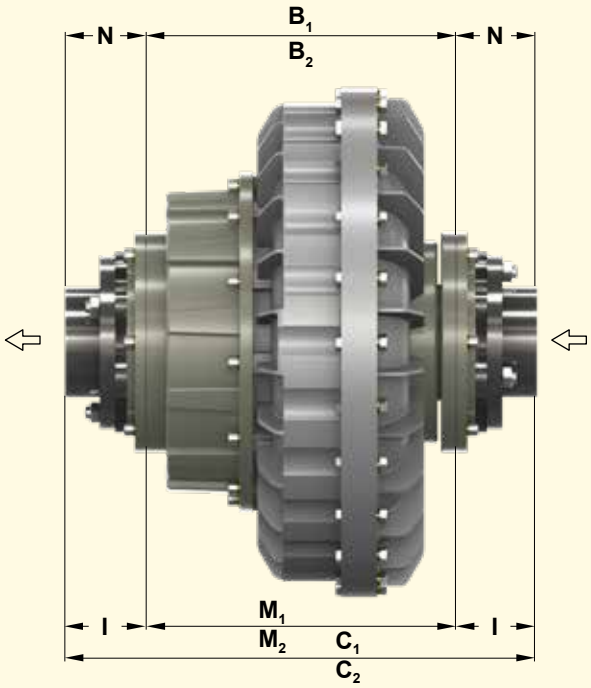

CKDM - CCKDM

NB: The arrows ⇦ indicate input and output in the standard versions.

FLUID COUPLING FITTED WITH HALF DISC COUPLINGS, WITHOUT MAINTENANCE AND PRESCRIBED FOR PARTICULAR AMBIENT CONDITIONS. TO BE RADIALLY DISASSEMBLED WITHOUT MOVING THE MACHINES.

⇨ Dimensions

Size	A	B KDM	B_1 CKDM	B_2 CCKDM	C KDM	C_1 CKDM	C_2 CCKDM	D G min	D G max	H	I	M KDM	M_1 CKDM	M_2 CCKDM	N	P	Disc coupling size	Weight kg (without oil) KDM	CKDM	CCKDM
11	325	186	232	-	289	335	-	16	55	123	50	189	235	-	51.5	76	1055	22.5	25	-
12	372		253			356							256					26	29	
13	398	216	276		339	399		21	65	147	60	219	279		61.5	88	1065	41.3	44.3	
15	460	246	314	364	391	459	509	21	75	166	70	251	319	369	72.5	104	1075	65	69	76.7
17	520	269	349	429	444	524	604	31	90	192	85	274	354	434	87.5	122	1085	89	95	104
19	565																	96	102	111
21	620	315	415	505	540	640	730	41	115	244	110	320	420	510	112.5	154	1110	159	169	177
24	714																	177	187	195
27	780	358	476	576	644	762	862	51	135	303	140	364	482	582	143	196	1140	289	307	326
29	860	387	505	605	673	791	891					393	511	611				342	360	370
34	1000	442	573	673	768	899	999	61	165	340	160	448	579	679	163	228	1160	556	562	572

- WHEN ODERING, SPECIFY: SIZE - MODEL
- FINISHED D-G BORES UPON REQUEST
  EXAMPLE: 27 CKDM

DIMENSIONS ARE SUBJECT TO ALTERATION WITHOUT NOTICE

TRANSFLUID® industrial & marine

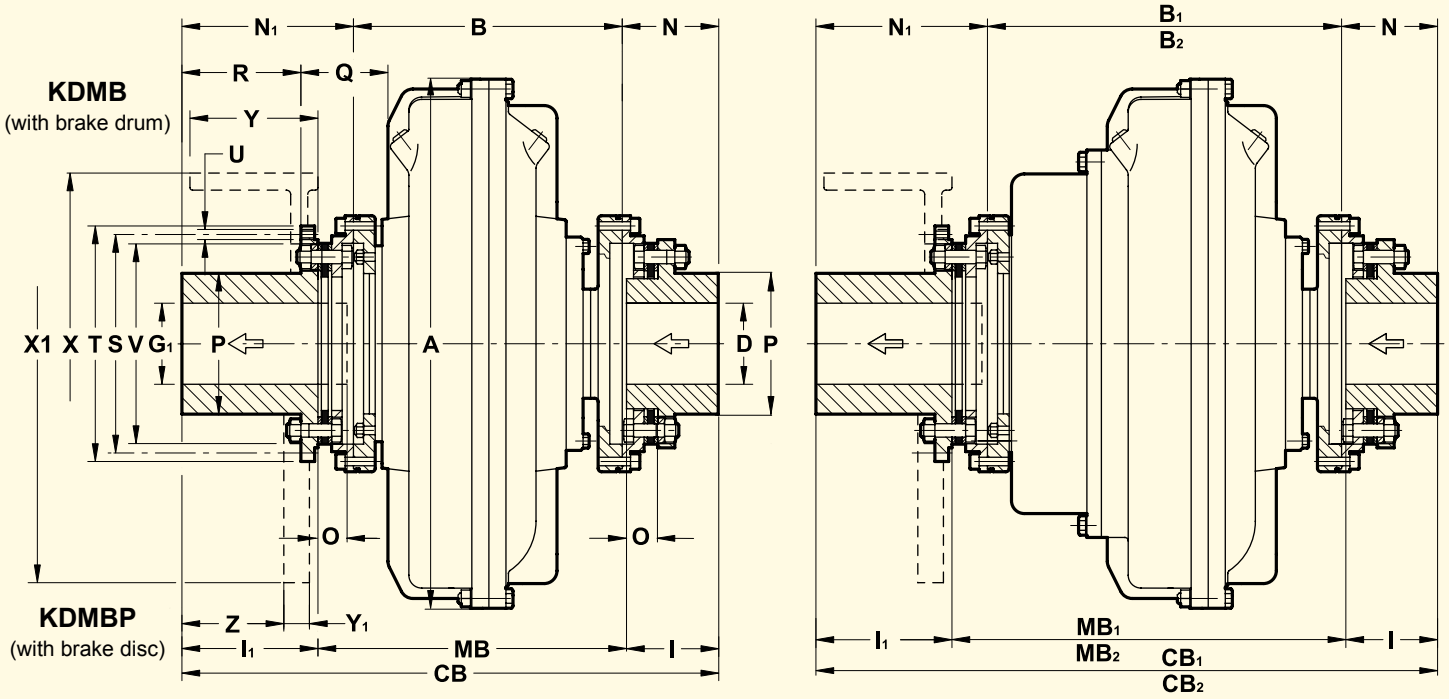

NB: The arrows ⇦ indicate input and output in the standard versions.

ONLY FOR 27 - 29 ARE AVAILABLE HUBS
FOR BRAKE DRUM/DISC
WITH CENTRAL FLANGE

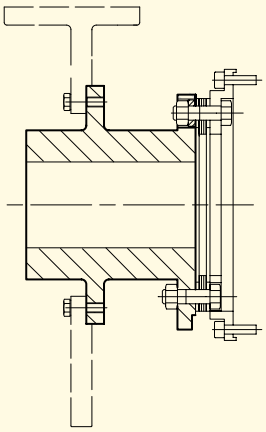

⇨ Dimensions

Size	Brake drum X - Y	Brake disc X_1 - Y_1	Weight kg (without oil, brake drum and disc) KD...	CKD...	CCKD...
12	200 - 75	on request	27	30	-
13			42.5	45.8	
15	250 - 95	450 - 30	69.3	73.3	81
17	315 - 118	500 - 30	99	105	114
19	400 - 150	560 - 30	105	112	125
21	400 - 150	630 - 30	179	189	197
24	500 - 190	710 - 30	197	207	215
27	500 - 190	800 - 30	317	335	354
29			370	388	398
34	on request	800 - 30 1000 - 30	599	587	597

⇨ Dimensions

Size	A	B KDM	B1 CKDM	B2 CCKDM	CB KD...	CB1 CKD...	CB2 CCKDM...	D max	G1 max	I	I1 std	I1 max	MB KD....	MB1 CKD...	MB2 CCKDM...	N	N1 St	O	P	Q	R	S ÷0.1	T f7	U Nr.	U Ø	V	Z	Disc coupling size
12	372	186	253	-	336.5	403.5	-	55	60	50	80		206.5	273.5	-	51.5	99	17.5	76	67	69	128	142	8	M8	114	-	1055
13	398	216	276		440.5	500.5		65	65	60	140	170	240.5	300.5		61.5	163	21.5	88	78	129	155	170	12		140		1065
15	460	246	314	364	495.5	563.5	613.5	75	80	70	150		275.5	343.5	393.5	72.5	177	24.5	104	98	134	175	192		M10	157	109	1075
17	520	269	349	429	548.5	628.5	708.5	90	95	85	160	210	303.5	383.5	463.5	87.5	192	29.5	122	107	143	204	224			185	118	1085
19	565																			87								
21	620	315	415	505	628.5	728.5	818.5	115	120	110		240	358.5	458.5	548.5	112.5	201	38.5	154	133	137	256	276		M12	234	112	1110
24	714																			109								
27	780	358	476	576	731.5	849.5	949.5	135	145	140	180		411.5	529.5	629.5	143	230.5	47.5	196	107	155	315	338		M14	286	133	1140
29	860	387	505	605	760.5	878.5	978.5						440.5	558.5	658.5					109								
34	1000	442	573	673	845.5	976.5	1076.5	165	175	160			505.5	636.5	736.5	163	240.5	57.5	228	124	152	356	382		M16	325	130	1160

– WHEN ORDERING, SPECIFY: SIZE - MODEL
– **D** AND **G1** FINISHED BORES UPON REQUEST, AND SPECIAL **I1** DIMENSION
– FOR BRAKE DRUM OR DISC, SPECIFY DIMENSIONS **X** AND **Y** OR **X1** AND **Y1**
EXAMPLE : 17KDMB - BRAKE DRUM 400 x 150

DIMENSIONS ARE SUBJECT TO ALTERATION WITHOUT NOTICE

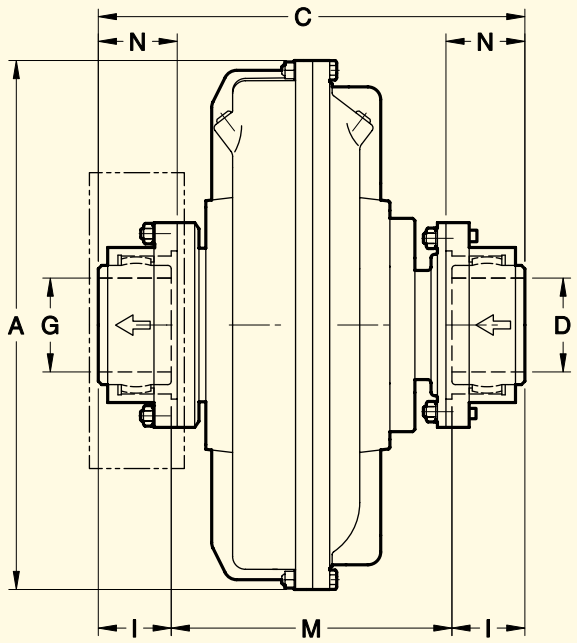

KCG

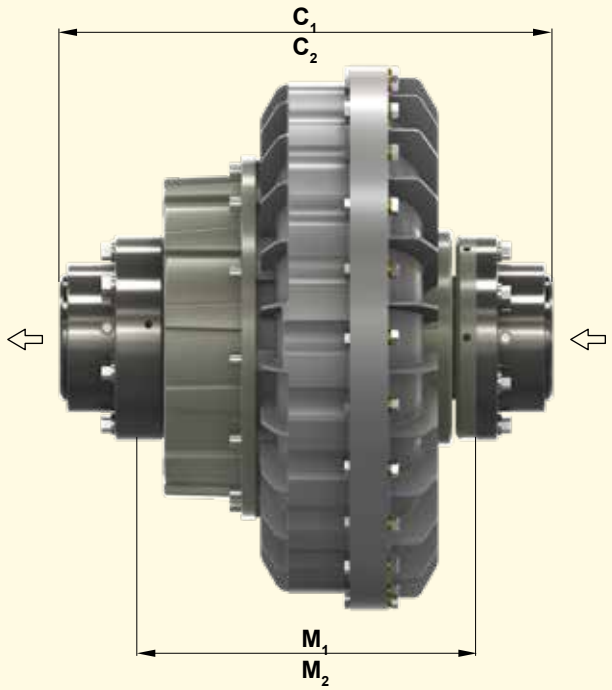

CKCG - CCKCG

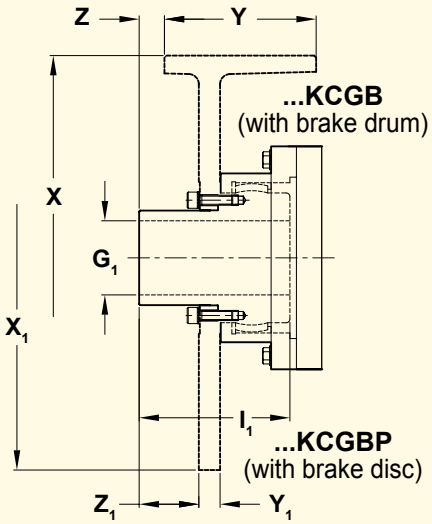

Brake drum or disc upon request

NB: The arrows ⇦ indicate input and output in the standard versions.

FLUID COUPLING FITTED WITH HALF GEAR COUPLINGS, TO BE RADIALLY DISASSEMBLED WITHOUT MOVING THE MACHINES

Dimensions

Size	A	C KCG	C_1 CKCG	C_2 CCKCG	D G max	G_1 max	I	I_1	M KCG	M_1 CKCG	M_2 CCKCG	N	Brake drum X - Y	Z	Brake disc X_1 - Y_1	Z_1	Gear Couplig Size	Weight kg (without oil) KCG	CKGC	CCKCG
7	228	229	-	-	50	-	43	80	143	-	-	44.5	•	•	•	•	1" E.I. (5) (6)	11.3	-	-
8	256	234							148									11.7		
9	295	290.6			65	45	50	114	190.6			50.8	250-95	45	400-30	32	1" ½ E.I. (5) (6)	22.9		
11	325	299.6	345.6						199.6	245.6								24.9	27.4	
12	372	299.6	366.6							266.6								28.5	31.4	
13	398	325.1	385.6						225.1	285.1								37.6	40.6	
15	460	410	478	528	95	65	76	146	258	326	376	79.5	250-95	57.5	400-30	44.5	2" ½ E.I. (5) (6)	76.6	80.6	88.3
17	520	434	514	594					282	362	442		315-118	21.5	445-30			91.1	97.1	106.1
19	565																	98.1	104.1	113.1
21	620	503	603	693	111	90	90	165	323	423	513	93.5	315-118	26	560-30	38	3" E.I. (5) (6)	142.3	152.3	160.3
24	714												400-150	15	710-30	38		160.3	170.3	178.3
27	780	627	754	845	134	110	105	170	417	535	635	109.5	500-190	6	795-30	30	3" ½ E.I. (5) (6)	253.2	272.2	291.2
29	860	656	774	874					446	564	664							307.2	325.2	335.2
34	1000	750	881	981	160	120	120	190	510	641	741	123.5	•	•	800-30	42	4" E.I. (5) (6)	492.4	507.4	517.4
46	1330	-	-	1313.4	244	175	190	280	-	-	933.4	192.5	•	•	•	•	6" E.I. (5) (6)	-	-	1333

- UPON REQUEST

(5) E.I. = EXPOSED INCH SCREWS

(6) GEAR COUPLING WITH SPECIAL CALIBRATED BOLTS

– WHEN ORDERING, SPECIFY: SIZE - MODEL
EXAMPLE: 21CKCG

DIMENSIONS ARE SUBJECT TO ALTERATION WITHOUT NOTICE

TRANSFLUID® industrial & marine

FLUID COUPLING WITH DOUBLE CIRCUIT, FITTED WITH MAIN SUPPORTS AND INPUT AND OUTPUT SHAFTS

D34KBM
D46KBM

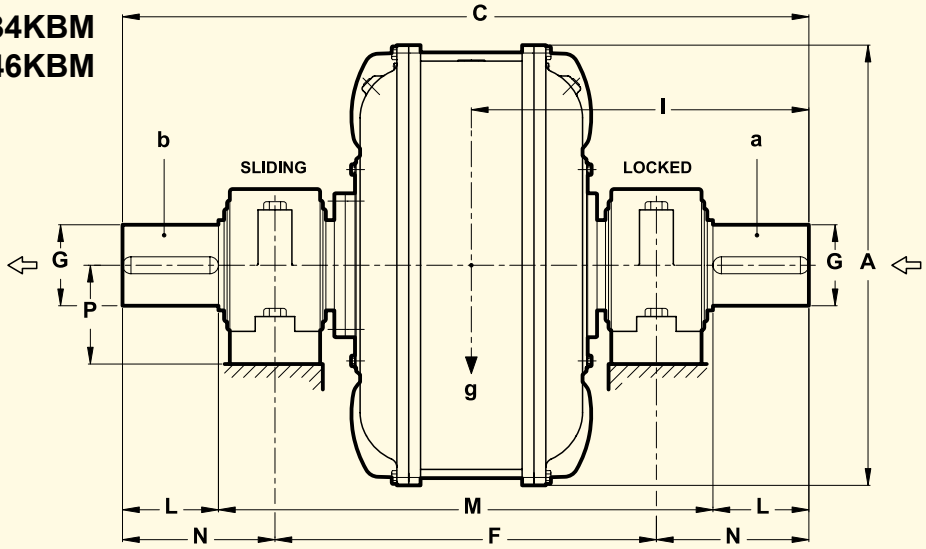

SERIES	A	C	F	D-G m6	L	M	N	P
D34KBM	1000	1400	855	140	140	1120	257.5	170
D46KBM	1330	1900	1275	160	200	1550	312.5	170

WEIGHT Kg (Without oil)	OIL max. l	CENTER OF GRAVITY g Kg	CENTER OF GRAVITY l mm	MOMENT OF INERTIA J (WR2) Kgm² a	MOMENT OF INERTIA J (WR2) Kgm² b
810	162	952	710	26.19	64.25
2200	390	2514	955	91.25	183.7

KEYWAYS ACCORDING TO ISO 773 - DIN 6885/1

FLUID COUPLINGS FITTED WITH DOUBLE CIRCUIT, TO BE RADIALLY DISASSEMBLED WITHOUT MOVING THE MACHINES.

WITH HALF DISC COUPLINGS, WITHOUT MAINTENANCE

D34KDM

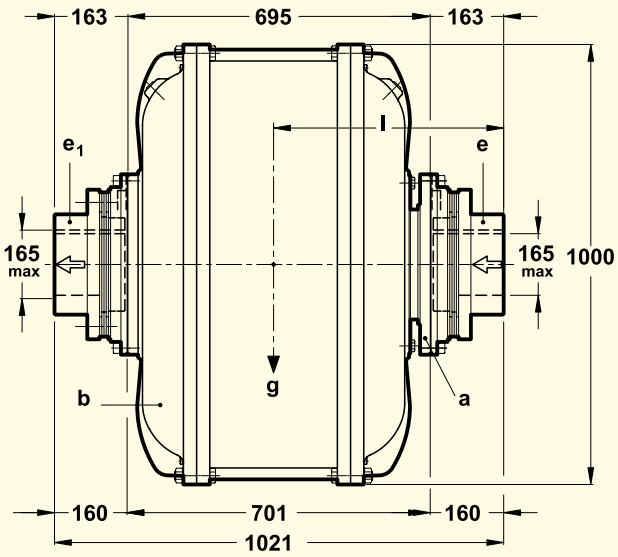

WITH HALF DISC COUPLINGS, WITHOUT MAINTENANCE

D34CKDM

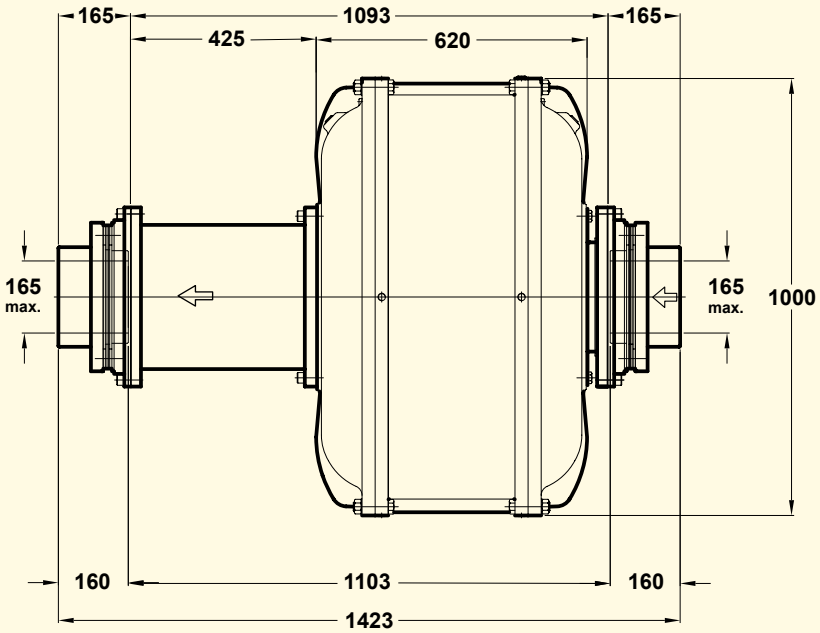

NB: The arrows ⇦ indicate input and output in the standard versions.

⇨ Dimensions

⇦ Size	WEIGHT Kg (without oil)	OIL max. l	CENTER OF GRAVITY g kg	CENTER OF GRAVITY l mm	MOMENT OF INERTIA J (WR2) Kgm² a	b	c	d
D34KDM	880	162	1022	512	26.08	65.53	0.955	0.955
D34CKDM	1014	194.5	194.5	532	26.08	67.99	0.955	0.955

Also available D46KCG. For information please apply Transfluid

g = TOTAL WEIGHT INCLUDING OIL (MAX FILL)
a = INTERNAL ELEMENT
b = EXTERNAL ELEMENT
d = HALF FLEXIBLE COUPLING (INTERNAL ELEMENT)
d_1 = HALF FLEXIBLE COUPLING (EXTERNAL ELEMENT)

DIMENSIONS ARE SUBJECT TO ALTERATION WITHOUT NOTICE

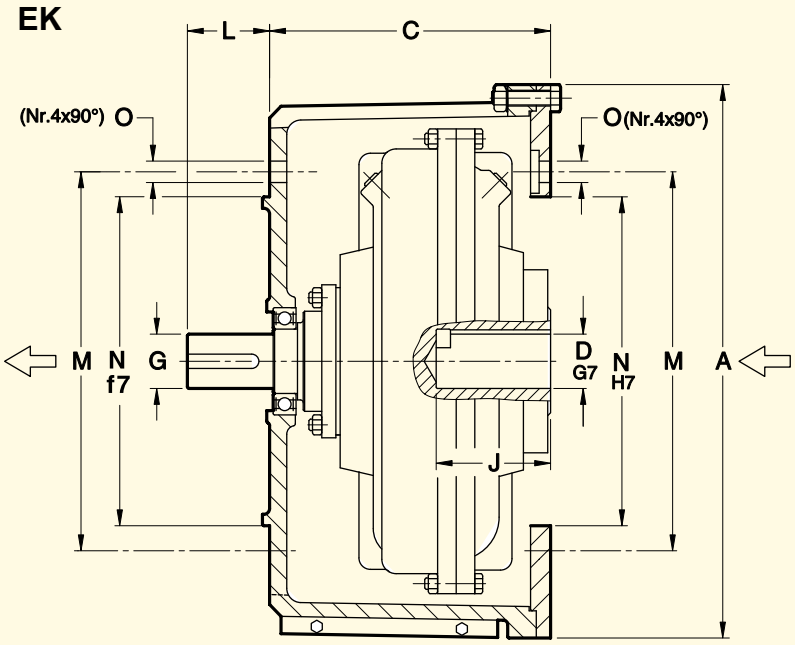

Example for application

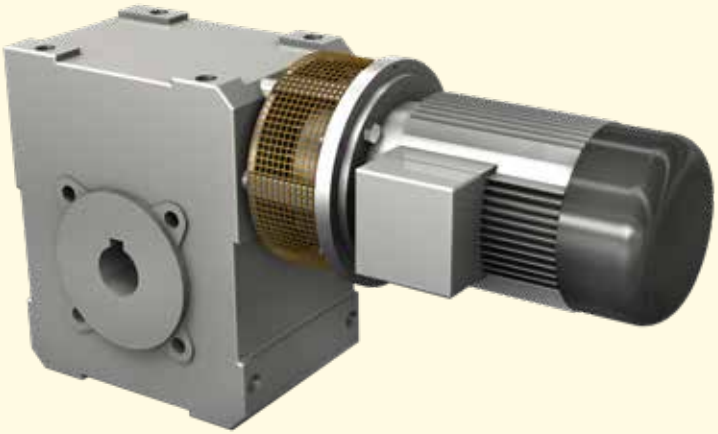

NB: The arrows ⇦ indicate input and output in the standard versions.

⇨ Dimensions

Size ⇦	D	J	G	L	A	C	M	N	O	Weight kg (without oil)	OIL max l	Electric motors TYPE	Electric motors kW 1500 rpm
7	• 24	52	24	38	269	132	165	130	11	11.4	0.92	90S - 90L **90LL	1.1 -1.5 1.6
8	• 28	62	28 h7	44	299	142	215	180	13	12.2	1.5	100 L 112 M	2.2 -3 4
9	• 38	82	38	57	399	187	265	230	13	26.9	1.95	132S - 132M ** 132L	5.5 - 7.5 9.2
11	• 42	112	42	63	399	187	300	250	17	28.3	2.75	160M -160 L	11 - 15
12	•• 48	112	48 j7	65	485	214	300	250	17	66	4.1	180 M 180 L	18.5 22
13	• 55	112	55	80			350	300		76	5.2	200 L	30

- • CYLINDRICAL BORE WITH A KEYWAY ISO 773 - DIN 6885/1
- •• CYLINDRICAL BORE WITH A REDUCED KEYWAY (DIN 6885/2)
- ** NOT STANDARD

WHEN ORDERING SPECIFY: SIZE - MODEL - DIAMETER D and G
EXAMPLE: 8 EK-D28 - G 28

DIMENSIONS ARE SUBJECT TO ALTERATION WITHOUT NOTICE

TRANSFLUID®
industrial & marine

KRB (with brake drum) / KRG

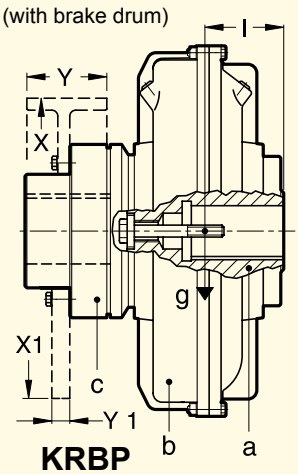

CKRG - CCKRG

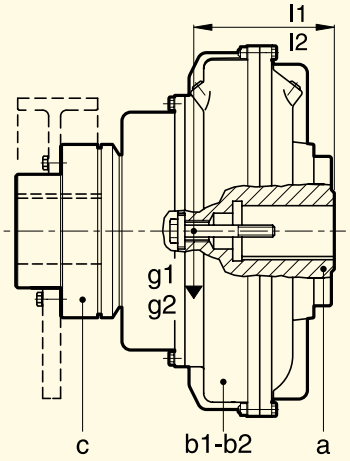

KCG

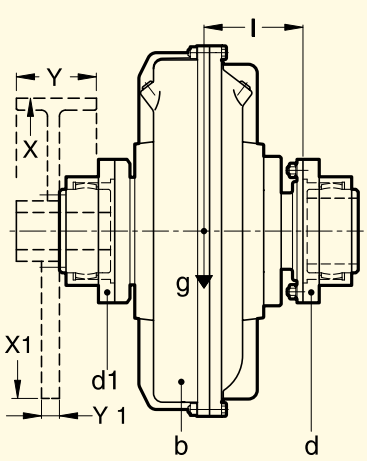

CKCG - CCKCG

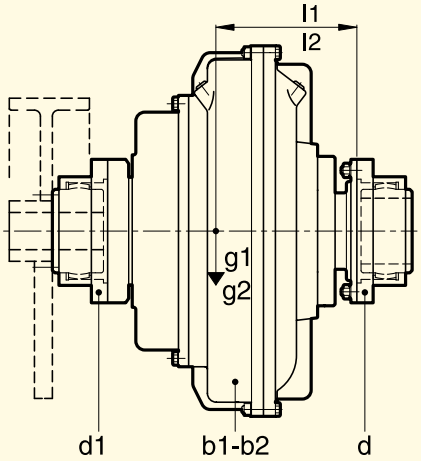

KRBP (with brake disc)

KDM

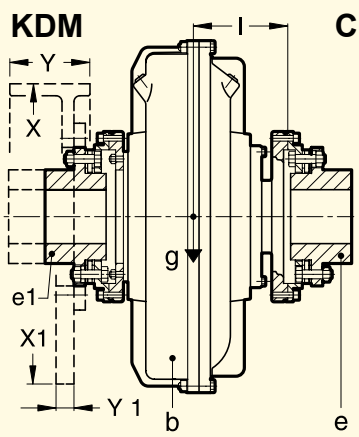

CKDM-CCKDM

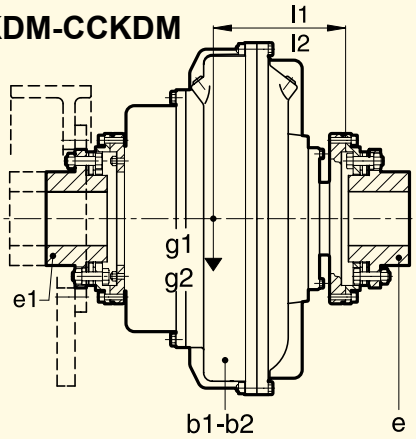

Dimensions

Size	MOMENT OF INERTIA With brake drum X - Y	kgm²	Weight kg	With brake disc X_1 - Y_1		kgm²	Weight kg
13-15	250 -95	0.143	11.9	400	-	0.587	27
	315 -118	0.379	20.1	450		0.944	34.9
17-19	315 -118	0.378	19.8	450		0.941	34.2
				500		1.438	43
	400 -150	1.156	37.5	560		2.266	54.7
21-24	400 - 150	1.201	39.9	560		2.255	52.7
				630		3.623	68.1
	500 - 190	3.033	64.1	710		5.856	88
				795		9.217	111.6
27-29	500 - 190	3.022	62.8	710		5.840	86
				795		9.200	109.6
				800		9.434	111.1
34	630 - 236	10.026	132.6	800		9.418	109.6
				1000		23.070	176.2

Dimensions

Size	CENTER OF GRAVITY KRG g Kg	KRG l mm	CKRG g_1 Kg	CKRG l_1 mm	CCKRG g_2 Kg	CCKRG l_2 mm	KCG g Kg	KCG l mm	CKCG g_1 Kg	CKCG l_1 mm	CCKCG g_2 Kg	CCKCG l_2 mm	KDM g Kg	KDM l mm	CKDM g_1 Kg	CKDM l_1 mm	CCKDM g_2 Kg	CCKDM l_2 mm
7	9.1	92	-	-	-	-	12.1	70	-	-	-	-	-	-	-	-	-	-
8	10	93					13	73										
9	17.7	134					24.6	86					22.2	81				
11	20.4	136	23.4	151			27.3	93	30.2	107			24.9	85	27.9	98		
12	25.1	142	28.7	154			32.1	98	35.6	113			29.6	92	33.2	104		
13	38.5	157	42	176			42.2	104	45.7	115			45.8	101	49.3	109		
15	57	174	61.8	195	70.2	216	77.3	124	82.1	135	90.4	147	71.7	121.5	76.6	130	85.7	145
17	87.2	205	94.8	225	106.5	238	85.3	138	103.1	152	126.6	185	99.2	135	106.9	145	118.3	163
19	96.4	201	104.4	221	116	227	104.6		112.6		136	182	106.4		116.4		127.4	161
21	145.6	233	159	265	169.3	288	151.2	157	164.5	174	200.2	211	175.6	156	189	168	201	182
24	172	227	184	255	195.3	280	177.2		190.2	170	225.2	201	202		214.3	166	226	178
27	265	262	290	298	313	312	276.2	185	304.2	210	361.2	248	326	164	351	174	378	195
29	329	277	354	305	368	321	344.2	198	359.2	218	415.2	251	383	176	411	188	432	200
34	521	333	549	364	580	376	548.9	235	571.9	253	582.9	282	628	209	636	214	650	222
46	-				1294	485	-				1524	368	-					

MOMENT OF INERTIA J kgm² ...K... a	b	b_1	b_2	...KRG c	...KCG d	d_1	...KDM e	e_1
0.006	0.019	-	-	0.004	0.004	0.004	-	-
0.012	0.034							
0.020	0.068			0.011	0.017	0.016	0.014	0.014
0.039	0.109							
0.072	0.189	0.217						
0.122	0.307	0.359		0.032			0.032	0.036
0.236	0.591	0.601	0.887	0.082	0.091	0.102	0.063	0.064
0.465	1.025	1.281	1.372	0.192	0.091	0.102	0.121	0.125
0.770	1.533	1.788	1.879					
1.244	2.407	2.997	3.181	0.370	0.145	0.375	0.210	0.373
2.546	4.646	5.236	5.420					
3.278	7.353	9.410	10.37	1.350	0.500	0.436	0.934	0.887
4.750	11.070	13.126	13.754					
11.950	27.299	29.356	29.983	3.185	0.798	1.649	1.565	2.773
52.2	-		106.6	6.68	4.35	7.14	-	

g g1 g2 = TOTAL WEIGHT, INCLUDING OIL (MAX FILL)
* For **KSD** (without pulley) = a + b
* For **CKSD** (without pulley) = a + b1
* For **CCKSD** (without pulley) = a + b2

a = INTERNAL ELEMENT b = EXTERNAL ELEMENT + COVER
b1 = b + DELAY CHAMBER b2 = b + DOUBLE DELAY CHAMBER
c FLEXIBLE COUPLING
d e = HALF FLEXIBLE COUPLING (INTERNAL ELEMENT)
d1 e1 = HALF FLEXIBLE COUPLING (EXTERNAL ELEMENT)
EXAMPLE: J..CCKCG = a+d (INT. ELEM.) b2+d1 (EXT. ELEM.)

DIMENSIONS ARE SUBJECT TO ALTERATION WITHOUT NOTICE

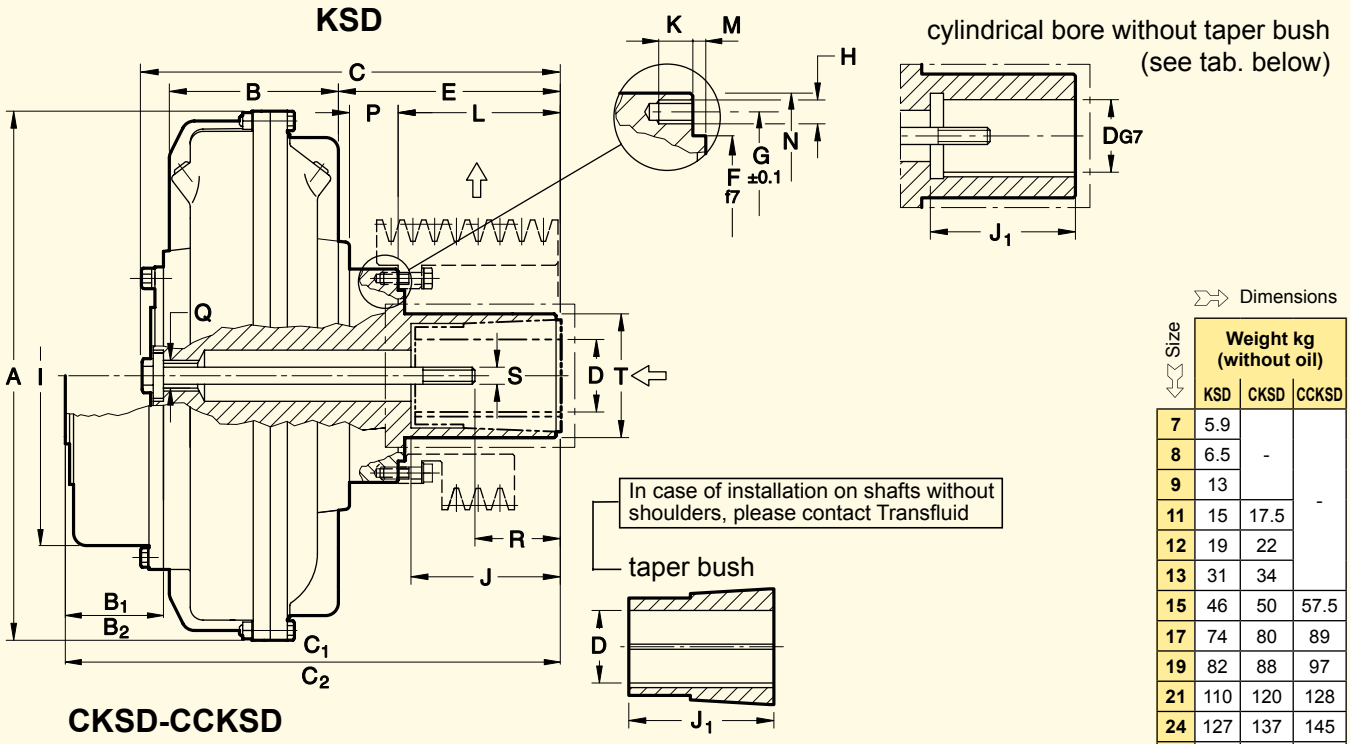

Dimensions

Size	Weight kg (without oil) KSD	CKSD	CCKSD
7	5.9	-	-
8	6.5		
9	13		
11	15	17.5	
12	19	22	
13	31	34	
15	46	50	57.5
17	74	80	89
19	82	88	97
21	110	120	128
24	127	137	145
27	184	202	221

NB: The arrows ⇦ indicate input and output in the standard versions.

TAPER BUSH VERSION

Dimensions

Size	D	J	J_1	A	B KSD	B_1 CKSD	B_2 CCKSD	C max	C_1 CKSD	C_2 CCKSD	E	F	G	H Nr.	H Ø	I	K	L	M	N	P	Q	R	S	T max
7	19 24	69	40 50	228	77	-	-	159	-	-	55	75	90	4	M6	-	8	35	3	114	14	M12	29 38	M6 M8	50
	28		60					174			70							50					43	M10	
8	24		50	256	91			194			81							65					33	M8	
	28		60																				43	M10	
9	28 38	111	60 80	295	96			250			116	96	114	8	M8		13	85	5	128	20	M20	39 61	M10 M12	69
	•••42		80																				78	M16	
11	28 38		60 80	325	107	73.5		259	289.5		113					195							38 59	M10 M12	
	•••42		80																				78	M16	
12	38 42	113	80 110	372	122	80		274	327		125	112	130			224		98	7	145	22		54 83	M12 M16	80
	•••48		110																				83	M16	
13	42 48	144	110	398	137			367	407		190	135	155	12				158	6	177	29	M27	76	M16	88
	•••55 •••60		110 58.5																				76 106	M20	
15	48 55	145	110	460	151	92	142	390	438	488	195	150	178		M10	264	17	159		206	28		80 70	M16 M20	100
	60 •••65		140																				100	M20	
17	48 55	145	110	520	170	101	181	455	516	596	245	180	200			337	17	180	7	225	60		69	M20	132
	60 •••65		140																				99		
	•75 •80	-	140 170																				99 139		
19	48 55	145	110	565	177						238										45		69		
	60 •••65		140																				99		
	•75 •80	-	140 170																				99 139		

– D BORES RELATIVE TO TAPER BUSHES WITH A KEYWAY ACCORDING TO ISO 773 - DIN 6885/1
PARTICUALR CASES:
• CYLINDRICAL BORE WITHOUT TAPER BUSH ISO 773 - DIN 6885/1
••• TAPER BUSH WITHOUT A KEYWAY

CYLINDRICAL BORE VERSION

21	•80	-	170	620	188	115	205	505	580	670	277	200	228	8	M14	400	23	190	7	250	57	M46	135	M20	145
	•100		210					545	620	710	317							230					165	M24	
24	•80		170	714	212			505	580	670	253							190			M46		135	M20	
	•100		210					545	620	710	293							230					165	M24	
27	120 max		210	780	278	138	CONSULT OUR ENGINEERS																		

• STANDARD CYLINDRICAL BORES WITH KEYWAYS ACCORDING TO ISO 773 - DIN 6885/1
– WHEN ORDERING SPECIFY: SIZE - MODEL - D DIAMETER
EXAMPLE: 12KSD - D 42

DIMENSIONS ARE SUBJECT TO ALTERATION WITHOUT NOTICE

TRANSFLUID® industrial & marine

KSI - CKSI - CCKSI

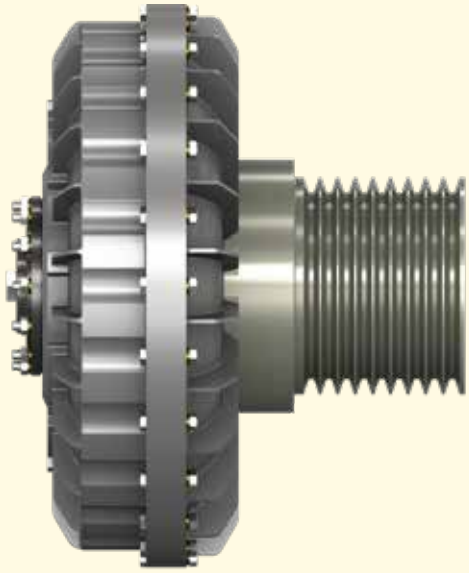

KSDF - CKSDF - CCKSDF

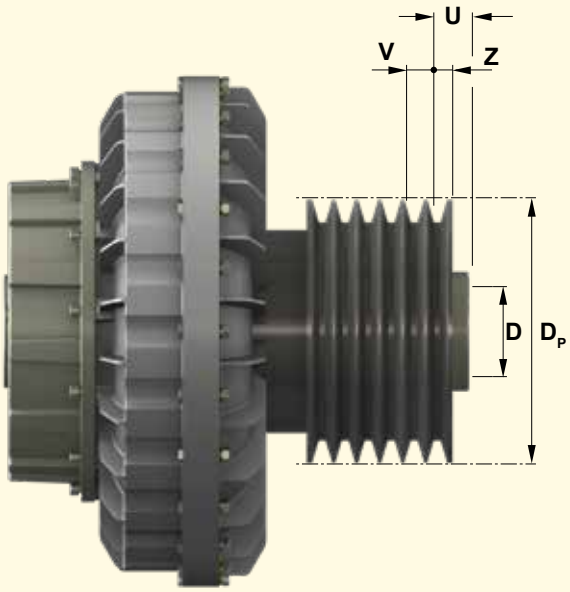

...KSI

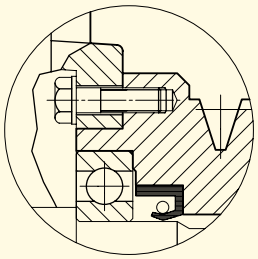

...KSDF

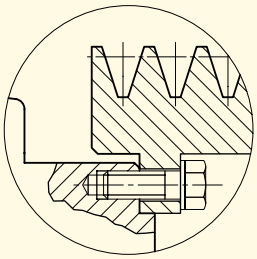

Dimensions

Size	D	U	Integral pulley	
			Dp	N° type
7	19 - 24	11.5	80	2 - SPA/A
			90	
			100	
	-	26.5	80	
			90	
			100	
8	19 - 24	26.5	90	3 - SPA/A
			100	
9 11	38 42	10	112	5 - SPA/A
		15	125	4 - SPB/B
12	38 - 42 48	12	140	5 - SPB/B

GROOVE	V	Z
SPZ/Z	12	8
SPA/A	15	10
SPB/B	19	12.5
SPC/C	25.5	17
D	37	24
3 V	10.3	8.7
5 V	17.5	12.7
8 V	28.6	19

Dimensions

Size	D	U	Flanged pulley	
			Dp	N° type
7	19 - 24	6	125	2 - SPA/A
	28	21		
8	19 - 24 28	36	125	
		9	112	3 - SPA/A
9 11	28 - 38 42	34	160	4 - SPB/B
		58	200	3 - SPB/B
12	38 - 42 48	50	180	4 - SPB/B
		51	200	3 - SPC/C
		26		4 - SPC/C
13	42 - 48 55 - 60	12.5	180	6 - SPB/B
		50 49	250	6 - SPB/B 5 - SPC/C
15	48 - 55 60 - 65	12.5	200	6 - SPB/B
		17	250	5 - SPC/C
		69	280	5 - SPB/B
17 19	67 - 75 80	72.5	280	6 - SPB/B
		85.5	310	6 - SPC/C
		72.5	315	6 - SPB/B
		59	345	6 - SPC/C
21 24	Upon request			
27				

– WHEN ORDERING, SPECIFY: SIZE - MODEL - **D** DIAMETER - **Dp - NUMBER** AND **TYPE OF GROOVES**
EXAMPLE: 13 CKSDF - D55 - PULLEY Dp. 250 - 5 SPC/C

DIMENSIONS ARE SUBJECT TO ALTERATION WITHOUT NOTICE

10. FILLING

Transfluid hydraulic couplings are supplied without oil. Standard filling: X for K series, 2 for CK series, and 3 for CCK series.
The quantities are indicated on page 13 and 15 of this catalog. Follow the procedure indicated on Installation and Maintenance manuals 150 GB and 155 GB delivered with each coupling.
Suggested oil: **ISO32 HM** for normal operating temperatures.
For temperatures down zero, I**SO FD 10 (SAE 5W)** and for temperatures lower than –20°C contact TRANSFLUID.

11. SAFETY DEVICES

FUSIBLE PLUG

In case of overloads, or when slip reaches very high values, oil temperature increases excessively, damaging oil seals and conseguently allowing leakage.
To avoid damage when used in severe applications, it is advisable to fit a fusible plug. Fluid couplings are supplied with a fusible plug at 140°C (109°C, 120°C or 198°C upon request).

SWITCHING PIN

Oil venting from fusible plug may be avoided with the installation of a switching pin. When the temperature reaches the melting point of the fusible ring element, a pin releases that intercepts a relay cam that can be used for an alarm or stopping the main motor. As for the fusible plug, 2 different fusible rings are available (below).

11.1 SWITCHING PIN DEVICE

This device includes a percussion fusible plug installed on the taper plug. The percussion fusible plug is made of a threaded plug and a pin hold by a fusible ring coming out due to the centrifugal force when the foreseen melting temperature is reached. Such increase of temperature can be due to overload, machinery blockage or insufficient oil filling. The pin, moving by approx. 16 mm, intercepts the cam of the switch to operate an alarm or motor trip signal.
After a possible intervention and removal of the producing reason, this device can be easily restored with the replacement of the percussion plug or even the fusible ring following the specific instructions included in the instruction manual.
With external wheel as driver, as indicated in Fig. 5, the percussion plug operates in any condition, while in case of driven external wheel it can operate correctly only in case of increase of the slip due to overload or excessive absorption.
It is possible to install this system on all fluid couplings starting from size 13K even in case it has not been included as initial supply, asking for a kit including percussion fusible plug, gasket, modified taper plug, counterweight for balancing, glue, lever switch assembly installation instructions.
In order to increase the safety of the fluid coupling a standard fusible plug is always installed, set at a temperature higher than that of the percussion fusible plug.
For a correct operation, please refer to the instructions relevant to the standard or reverse installation described at page 6.

- Lever switch standard supply 230 Vac
- Upon request: Atex version
- Switching pin available: see below tab

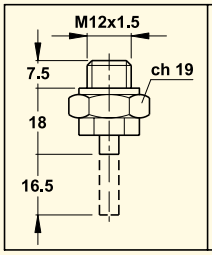

MELTING TEMPERATURE +10°C 0		
109°C	SPEC.	GA1004D
120°C	SPEC.	GA1004A
140°C	SPEC.	GA1004B

ELECTRONIC OVERLOAD CONTROLLER

This device consists of a proximity sensors measuring the speed variation between the input and output of the fluid coupling and giving an alarm signal or stopping the motor in case the set threshold is overcome.
With such a device, as well as with the infrared temperature controller, no further maintenance or repair intervention is necessary after the overload occupance, because the machinery can operate normally, once the cause of the inconvenience has been removed (see page 28).

INFRARED TEMPERATURE CONTROLLER

To measure the operating temperature, a device fitted with an infrared sensor is available. After conveniently positioning it by the fluid coupling, it allows a very precise non-contact temperature measurement.
Temperature values are reported on a display that also allows the setting of 2 alarm thresholds, that can be used by the customer (see page 29).

Fig. **5**

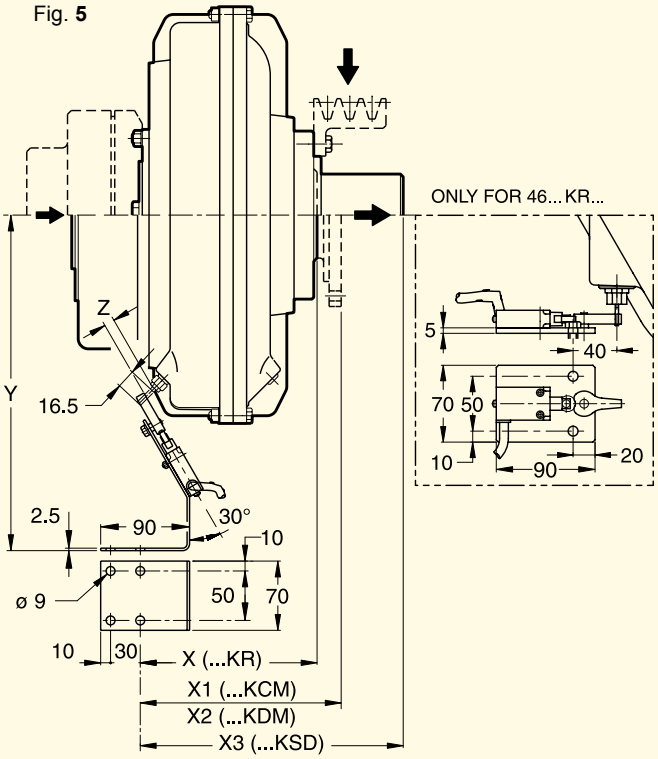

DIM.	X	X_1	X_2	X_3	Ø	Y	Z
7	115	128	-	148	24	262	-
				163	28		
8	124	137		187		272	
9	143	166.5	156	228		287.5	
11•••	150	173.5	163	236		300.5	
12	157	183.5	173	258		323	15
13	174	195.5	187	336		335	16
15	197	220	214	357		358	16
17	217	240	235	425		382	12
19	209	232	227	417		400.5	9
21	•257	282	277	••472		423	8
24	•257	282	277	••472		460	4
27	271.5	331	295	-		491	9
29	296.5	356	322			524	8
34	346	404	369			584	4

• For Dia. 100 + 35 mm
•• For Dia. 100 + 40 mm
••• Only for K... (CK... upon request)
REFERENCE DIMENSIONS

DIMENSIONS ARE SUBJECT TO ALTERATION WITHOUT NOTICE

11.2 OVERLOAD CONTROLLER (Fig. **6**)

When load torque increases, slip also increases and output speed consequently decreases.
The said speed variation can be measured by means of a sensor sending a pulse train to the speed controller. If the rotating speed goes lower than the set threshold (see diagram) on the controller, a signal is given through the intervention of the inner relay.
The device has a “TC” timer with a blind time before starting (1 - 120 s) avoiding the alarm intervention during the starting phase, and another “T” timer (1 – 30 s) preventing from undesired relay intervention during sudden changes of torque.
The device also provides a speed proportional analogic output signal (0 – 10 V), that can be forwarded to a display or a signal transducer (4 – 20 mA).
Standard supply is 230 V ac, other supplies are available upon request: 115 V ac, 24 V ac or 24 V dc, to be specified with the order.
Atex version is available too.

CONTROLLER PANEL (Fig. **7**)

(TC) Blind time for starting

Set screw regulation up to 120 s

(DS) Speed range regulation

Programmable DIP-SWITCH (5 positions), selecting relay status, proximity type, reset system, acceleration or deceleration.
Programming speed Dip-Switch with 6 positions allows to choose the most suitable speed range, according to the application being performed.

(SP) Speed level (set point)

Set screw regulation with digits from 0 to 10. The value 10 corresponds to full range set with DS1 Dip-Switch.

(R) Reset

Local manual reset is possible through R button, or remote reset by connecting a N.O. contact at pins 2-10 .

(SS) Threshold overtaking

(RED LED) It lights up every time that the set threshold (set point) is overtaken.

(A) Alarm led

(RED LED) It lights up when alarm is ON and the inner relay is closed.

(E) Enable

(YELLOW LED) It lights up when the device is enabled.

(T) Delay time

Set screw regulation up to 30 s.

(ON) Supply

(GREEN LED) It shows that the device is electrically supplied.

FOR FURTHER DETAILS, ASK FOR TF 5800-A.

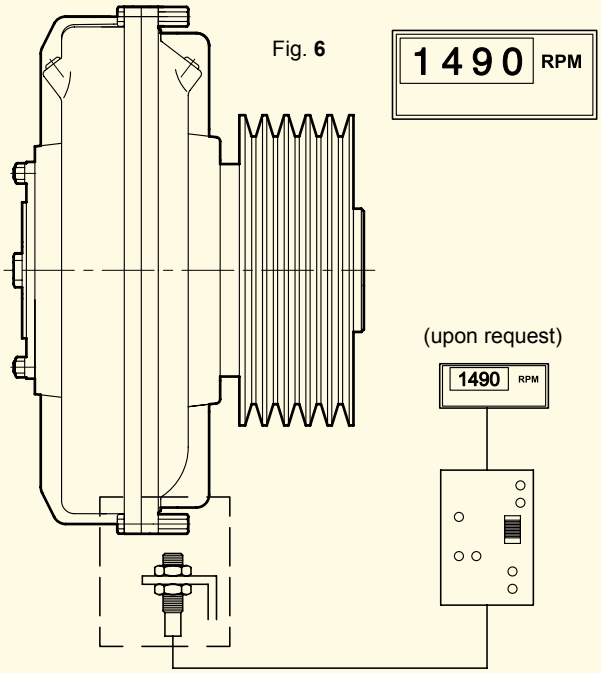

Fig. 6

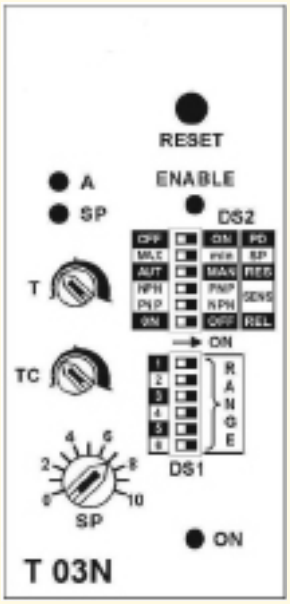

Fig. 7

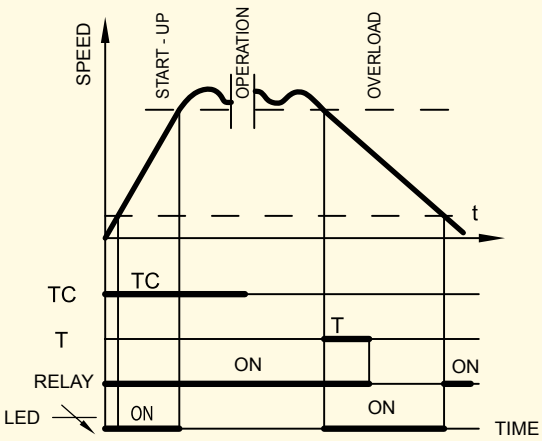

Diagram

11.3 INFRARED TEMPERATURE CONTROLLER

This is a non contact system used to check fluid coupling temperature. It is reliable and easily mounted.
It has 2 adjustable thresholds with one logical alarm and one relay alarm.

The proximity sensor must be positioned near the fluid coupling outer impeller or cover, according to one of the layouts shown in Fig. **8**.

The distance between the sensor and the fluid coupling must be about 15-20 mm (cooling fins do not disturb the correct operation of the sensor).
To avoid that the bright surface of the fluid coupling reflects light, and thus compromises a correct temperature reading, it is necessary to paint the surface, directly facing the sensor with a flat black colour (a stripe of 6-7 cm is sufficient).
The sensor cable has a standard length of 90 cm. If required, a longer one may be used only if plaited and shielded as per type "K" thermocouples.

Fig. **8**

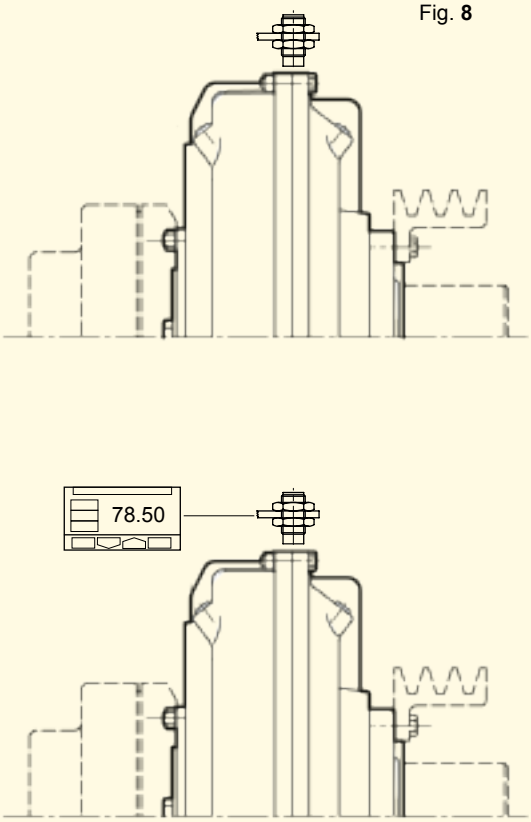

SENSOR	
Temperature range	0 ÷ 200 °C
Ambient temperature	- 18 ÷ 70 °C
Accuracy	0.0001 °C
Dimensions	32.5 x 20 mm
Standard wire lenght •	0.9 m
Body	ABS
Protection	IP 65
CONTROLLER	
Power supply	85...264 Vac / 48...63 Hz
Relay output OP1	No (2A - 250 V)
Logical output OP2	Not insulated
(5Vdc, ±10%, 30 mA max)	
AL1 alarm (display)	Logic (OP2)
AL2 alarm (display)	Relay (OP1) (NO, 2A / 250Vac)
Pins protection	IP 20
Body protection	IP 30
Display protection	IP 65
Dimensions	1/32 DIN – 48x24x120 mm
Weight	100 gr

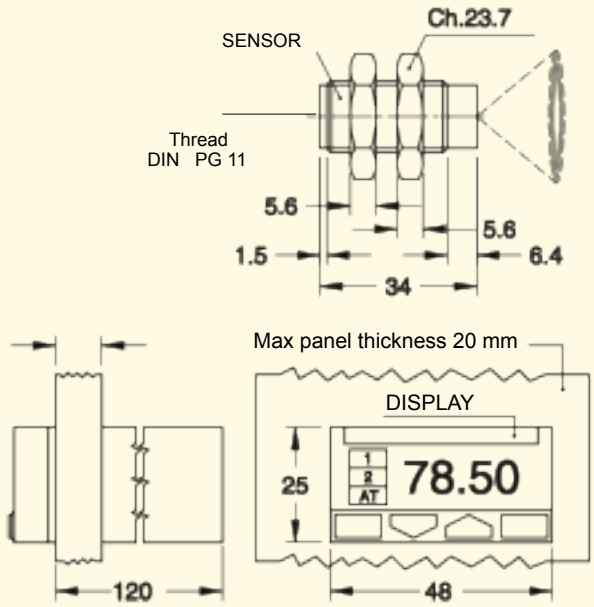

• CAN BE MADE LONGER WITH TWISTED AND SHIELDED WIRES FOR TYPE K THERMOCOUPLES (NOT SUPPLIED)

FLUID COUPLING
KSL SERIES

Start up and variable
speed drive up to 4000 kW

FLUID COUPLING
KPT SERIES

Start up and variable
speed drive up to 1700 kW

FLEXIBLE COUPLING
BM-B3M SERIES

Up to 33100 Nm

DISC & DRUM BRAKE
NBG/TFDS SERIES

Up to 19000 Nm

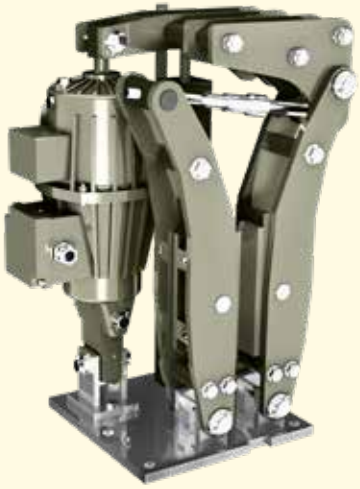

PNEUMATIC CLUTCH
TP SERIES

Up to 16800 Nm

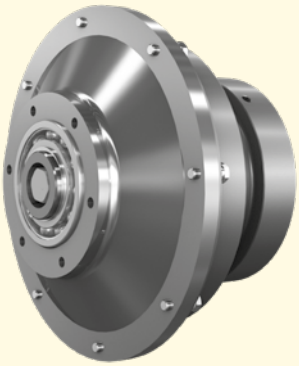

ELECTRIC MACHINES
PERMANENT MAGNETS
SYNCHRONOUS AC

Up to 100 kW

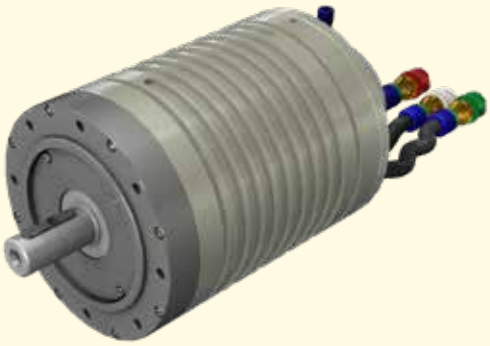

TRANSFLUID®
industrial & marine

ITALY
TRANSFLUID S.p.A.
Via Guido Rossa, 4
21013 Gallarate (VA)
Ph. +39.0331.28421
Fax +39.0331.2842911
info@transfluid.eu

CHINA
TRANSFLUID BEIJING TRADE CO.LTD
101300 Beijing
Ph. +86.1060442301-2
Fax +86.1060442305
tbtcinfo@transfluid.cn

FRANCE
TRANSFLUID FRANCE s.a.r.l.
38110 Rochetoirin
Ph. +33.9.75635310
Fax +33.4.26007959
tffrance@transfluid.eu

THE NETHERLANDS - GERMANY
TRANSFLUID NORTH EUROPE (Bellmarine)
NL-3992 AK, Houten
Ph. +31 (0)85 4868530
info@bellamarine.nl / tfnortheurope@transfluid.eu

U.S.A.
TRANSFLUID LLC
Auburn, GA 30011
Ph. +1.770.8221.777
Fax +1.770.8221.774
tfusa@transfluid.us

U.K.
TRANSFLUID UK LTD
London
Ph. +44.7445501066
marine@transfluid.co.uk

www.transfluid.eu
www.buy-transfluid.com

LOCAL DISTRIBUTOR